INTERNATIONAL STANDARD

ISO/IEC 18046-3

First edition
2007-09-15

Information technology — Radio frequency identification device performance test methods —

Part 3: Test methods for tag performance

Technologies de l'information — Méthodes d'essai de performance du dispositif d'identification par radiofréquence —

Partie 3: Méthodes d'essai des performances du label

Reference number
ISO/IEC 18046-3:2007(E)

© ISO/IEC 2007

Copyright International Organization for Standardization
Provided by IHS under license with ISO
No reproduction or networking permitted without license from IHS

Not for Resale

PDF disclaimer

This PDF file may contain embedded typefaces. In accordance with Adobe's licensing policy, this file may be printed or viewed but shall not be edited unless the typefaces which are embedded are licensed to and installed on the computer performing the editing. In downloading this file, parties accept therein the responsibility of not infringing Adobe's licensing policy. The ISO Central Secretariat accepts no liability in this area.

Adobe is a trademark of Adobe Systems Incorporated.

Details of the software products used to create this PDF file can be found in the General Info relative to the file; the PDF-creation parameters were optimized for printing. Every care has been taken to ensure that the file is suitable for use by ISO member bodies. In the unlikely event that a problem relating to it is found, please inform the Central Secretariat at the address given below.



COPYRIGHT PROTECTED DOCUMENT

© ISO/IEC 2007

All rights reserved. Unless otherwise specified, no part of this publication may be reproduced or utilized in any form or by any means, electronic or mechanical, including photocopying and microfilm, without permission in writing from either ISO at the address below or ISO's member body in the country of the requester.

ISO copyright office
Case postale 56 • CH-1211 Geneva 20
Tel. + 41 22 749 01 11
Fax + 41 22 749 09 47
E-mail copyright@iso.org
Web www.iso.org

Published in Switzerland

Copyright International Organization for Standardization
Provided by IHS under license with ISO
No reproduction or networking permitted without license from IHS

© ISO/IEC 2007 – All rights reserved

Not for Resale

Contents

Page

Foreword ... v

Introduction ... vi

1 Scope ... 1

2 Normative references ... 1

3 Terms and definitions ... 2

4 Symbols and abbreviated terms ... 2

5 Conditions applicable to the test methods ... 3
5.1 Number of tags to be tested ... 3
5.2 Test environment ... 3
5.3 RF environment ... 3
5.4 Pre-conditioning ... 3
5.5 Default tolerance ... 3
5.6 Total measurement uncertainty ... 3
5.7 Test result reporting ... 3
5.8 Test mounting material ... 3
5.9 Test communication parameters ... 4
5.10 Test equipment limits ... 4
5.11 Human exposure to EMF ... 4

6 Setup of test equipment for tag test ... 4
6.1 Test apparatus and test circuits for ISO/IEC 18000-2 tags ... 4
6.2 Test apparatus and test circuits for ISO/IEC 18000-3 tags ... 4
6.3 Test apparatus and test circuits for ISO/IEC 18000-6 tags ... 4
6.4 Test apparatus and test circuits for ISO/IEC 18000-7 tags ... 5

7 Functional tests for inductive tags as defined in ISO/IEC 18000-2, ISO/IEC 18000-3 and ISO/IEC 18000-6 ... 5
7.1 Identification magnetic field threshold ($H_{THR\ Identification}$) ... 5
7.2 Reading magnetic field threshold ($H_{THR\ Read}$) ... 7
7.3 Writing magnetic field threshold ($H_{THR\ Write}$) ... 9
7.4 Maximum operating magnetic field (H_{max}) ... 11
7.5 Survival magnetic field ($H_{Survival}$) ... 12
7.6 Load modulation (L_m) ... 14

8 Functional tests for propagative tags as defined in ISO/IEC 18000-6 ... 16
8.1 Identification electromagnetic field threshold ($E_{THR\ Identification}$) and frequency peak(s) ... 16
8.2 Reading electromagnetic field threshold ($E_{THR\ Read}$) ... 17
8.3 Writing electromagnetic field threshold ($E_{THR\ Write}$) ... 19
8.4 Sensitivity degradation ($S_{Degradation}$) ... 20
8.5 Maximum operating electromagnetic field (E_{max}) ... 22
8.6 Survival electromagnetic field ($E_{Survival}$) ... 23
8.7 Delta radar cross section (ΔRCS) ... 25
8.8 Interference rejection ($I_{Rejection}$) ... 26
8.9 Maximum identification fade rate ($E_{Fade\ Identification}$) ... 28
8.10 Maximum write fade rate ($E_{Fade\ Write}$) ... 29

9 Functional tests for 433,920 MHz propagative tags as defined in ISO/IEC 18000-7 ... 30
9.1 Identification electromagnetic field threshold ($E_{THR\ Identification}$) and frequency tolerance ... 30
9.2 Reading electromagnetic field threshold ($E_{THR\ Read}$) and frequency tolerance ... 32
9.3 Writing electromagnetic field threshold (ETHR Write) ... 34
9.4 Sensitivity Directivity ($S_{Directivity}$) ... 35

© ISO/IEC 2007 – All rights reserved

Copyright International Organization for Standardization
Provided by IHS under license with ISO
No reproduction or networking permitted without license from IHS
Not for Resale

9.5 Interference rejection ($I_{Rejection}$) **38**
9.6 Maximum operating electromagnetic field (E_{max}) **41**
9.7 Survival electromagnetic field ($E_{Survival}$) **43**

Annex A (informative) **Resonant frequency and Q factor measurement for inductive tag** **45**

Annex B (normative) **Test apparatus modification for ISO/IEC 18000-3 compliant tags for field strengths > 5A/m** **49**

Annex C (normative) **Test apparatus modification for ISO/IEC 18000-6 compliant tags** **50**

Annex D (informative) **Power to electric field conversion** **52**

Annex E (informative) **Inventory command for all parts of ISO/IEC 18000** **53**

Bibliography **54**

© ISO/IEC 2007 – All rights reserved
Copyright International Organization for Standardization
Provided by IHS under license with ISO
No reproduction or networking permitted without license from IHS
Not for Resale

Foreword

ISO (the International Organization for Standardization) and IEC (the International Electrotechnical Commission) form the specialized system for worldwide standardization. National bodies that are members of ISO or IEC participate in the development of International Standards through technical committees established by the respective organization to deal with particular fields of technical activity. ISO and IEC technical committees collaborate in fields of mutual interest. Other international organizations, governmental and non-governmental, in liaison with ISO and IEC, also take part in the work. In the field of information technology, ISO and IEC have established a joint technical committee, ISO/IEC JTC 1.

International Standards are drafted in accordance with the rules given in the ISO/IEC Directives, Part 2.

The main task of the joint technical committee is to prepare International Standards. Draft International Standards adopted by the joint technical committee are circulated to national bodies for voting. Publication as an International Standard requires approval by at least 75 % of the national bodies casting a vote.

Attention is drawn to the possibility that some of the elements of this document may be the subject of patent rights. ISO and IEC shall not be held responsible for identifying any or all such patent rights.

ISO/IEC 18046-3 was prepared by Joint Technical Committee ISO/IEC JTC 1, *Information technology*, Subcommittee SC 31, *Automatic identification and data capture techniques*.

ISO/IEC 18046 consists of the following parts, under the general title *Information technology — Radio frequency identification device performance test methods*:

— *Part 3: Test methods for tag performance*

The following parts are under preparation:

— *Part 1: Test methods for system performance*

— *Part 2: Test methods for interrogator performance*

--`,,```,,,,````-`-`,,`,,`,`,,`---

© ISO/IEC 2007 – All rights reserved

Copyright International Organization for Standardization
Provided by IHS under license with ISO
No reproduction or networking permitted without license from IHS
Not for Resale

Introduction

Radio frequency identification (RFID) technology has broad applicability to the Automatic Identification and Data Capture (AIDC) industry in item management. As a wireless communication technique based on radio frequency technology, the applications cover multiple levels of the industrial, commercial and retail supply chains. These can include:

- freight containers,
- returnable transport items (RTIs),
- transport units,
- product packaging,
- product tagging.

Performance tests define test methods that deliver results that allow the comparison of different RFID systems, interrogator and tags in order to select among them for use in a particular application.

The performance characteristics of devices (tags and interrogation equipment) can vary drastically due to application factors as well as the particular RFID air interface (frequency, modulation, protocol, etc.) being supported. Of key concern is the matching of the various performance characteristics to the user application. Additionally, in an open environment users of such technology demand multiple sources for these devices from technology providers. A key challenge is a method of evaluating the differences between various technology providers' products in a consistent and equitable manner.

This part of ISO/IEC 18046 provides a framework for meeting the above-noted concern and challenges. To this end, clear definitions of performance as related to user applications of RFID technology in the supply chain are provided. Based on such application-based definitions, test methods are defined with attention to the test parameters required for a consistent evaluation of RFID devices.

Of particular significance, these tests are defined for RFID devices having one antenna. It is common practice to have products with both single and multiple antennas to define an RFID transaction zone sufficient for the application. The defined methods can easily be extended from equipment with a single antenna to apply to equipment with multiple antennas, in order to evaluate performance under conditions more closely matching those of a particular application.

The International Organization for Standardization (ISO) and International Electrotechnical Commission (IEC) draw attention to the fact that it is claimed that compliance with this document may involve the use of patents.

The ISO and IEC take no position concerning the evidence, validity and scope of these patent rights.

The holder of this patent right has assured ISO and IEC that he is willing to negotiate licenses under reasonable and non-discriminatory terms and conditions with applicants throughout the world. In this respect, the statements of the holder of this patent right are registered with the ISO and IEC. Information may be obtained from the following company.

© ISO/IEC 2007 – All rights reserved
Copyright International Organization for Standardization
Provided by IHS under license with ISO
No reproduction or networking permitted without license from IHS
Not for Resale

Contact details	Patent number	Affected subclause(s) in this part of ISO/IEC 18046
Impinj inc 701 N. 34th Street, Suite 300 Seattle, WA 98103, USA Tel: +1 206/517-5300 Fax: +1 206/517-5262	Patent pending	6.3.2, 7.1.2.3, 7.3.2.3, 7.4.2.1, 7.5.2.1, 7.6.2.3

© ISO/IEC 2007 – All rights reserved

Copyright International Organization for Standardization
Provided by IHS under license with ISO
No reproduction or networking permitted without license from IHS
Not for Resale

Copyright International Organization for Standardization
Provided by IHS under license with ISO
No reproduction or networking permitted without license from IHS
Not for Resale

Information technology — Radio frequency identification device performance test methods —

Part 3:
Test methods for tag performance

1 Scope

This part of ISO/IEC 18046 defines test methods for performance characteristics of radio frequency identification (RFID) tags for item management, and specifies the general requirements and test requirements for tags which are applicable to the selection of the devices for an application. The summary of the test reports form a unified tag datasheet. It does not apply to testing in relation to regulatory or similar requirements.

2 Normative references

The following referenced documents are indispensable for the application of this document. For dated references, only the edition cited applies. For undated references, the latest edition of the referenced document (including any amendments) applies.

ISO/IEC 18000-1, *Information technology — Radio frequency identification for item management — Part 1: Reference architecture and definition of parameters to be standardized*

ISO/IEC 18000-2, *Information technology — Radio frequency identification for item management — Part 2: Parameters for air interface communications below 135 kHz*

ISO/IEC 18000-3, *Information technology — Radio frequency identification for item management — Part 3: Parameters for air interface communications at 13,56 MHz*

ISO/IEC 18000-6, *Information technology — Radio frequency identification for item management — Part 6: Parameters for air interface communications at 860 MHz to 960 MHz*

ISO/IEC 18000-7, *Information technology — Radio frequency identification for item management — Part 7: Parameters for active air interface communications at 433 MHz*

ISO/IEC TR 18047-2, *Information technology — Radio frequency identification device conformance test methods — Part 2: Test methods for air interface communications below 135 kHz*

ISO/IEC TR 18047-3, *Information technology — Radio frequency identification device conformance test methods — Part 3: Test methods for air interface communications at 13,56 MHz*

ISO/IEC TR 18047-4, *Information technology — Radio frequency identification device conformance test methods — Part 4: Test methods for air interface communications at 2,45 GHz*

ISO/IEC TR 18047-6, *Information technology — Radio frequency identification device conformance test methods — Part 6: Test methods for air interface communications at 860 MHz to 960 MHz*

ISO/IEC TR 18047-7, *Information technology — Radio frequency identification device conformance test methods — Part 7: Test methods for active air interface communications at 433 MHz*

ISO/IEC 19762 (all parts), *Information technology — Automatic identification and data capture (AIDC) techniques — Harmonized vocabulary*

© ISO/IEC 2007 – All rights reserved

Copyright International Organization for Standardization
Provided by IHS under license with ISO
No reproduction or networking permitted without license from IHS
Not for Resale

3 Terms and definitions

For the purposes of this document, the terms and definitions given in ISO/IEC 19762 (all parts) apply.

4 Symbols and abbreviated terms

$H_{THR\ Identification}$	Identification magnetic field threshold
$H_{THR\ Read}$	Reading magnetic field threshold
$H_{THR\ Write}$	Writing magnetic field threshold
H_{max}	Maximum operating magnetic field
$H_{Survival}$	Survival magnetic field
L_m	Load Modulation
$E_{THR\ Identification}$	Identification electromagnetic field threshold
$E_{THR\ Read}$	Reading electromagnetic field threshold
$E_{THR\ Write}$	Writing electromagnetic field threshold
$S_{Degradation}$	Sensitivity degradation
E_{max}	Maximum operating electromagnetic field
$E_{Survival}$	Survival electromagnetic field
ΔRCS	Delta radar cross section
$I_{Rejection}$	Interference rejection
G	Antenna gain
D	Distance between the tag and the antenna
MPE	Maximum Permissible human Exposure
SAR	Specific Absorption Rate

--`,,```,,,,````-`-`,,`,,`,`,,`---

© ISO/IEC 2007 – All rights reserved
Copyright International Organization for Standardization
Provided by IHS under license with ISO
No reproduction or networking permitted without license from IHS
Not for Resale

5 Conditions applicable to the test methods

5.1 Number of tags to be tested

Unless otherwise specified, testing shall be performed on 30 randomly chosen tags among a population of 1000 functional tags.

5.2 Test environment

Unless otherwise specified, testing shall take place in air environment of temperature 23° C +/- 3° C (73° F +/- 5° F) and of relative humidity 40 % to 60 %.

5.3 RF environment

The tests shall be performed in a known RF environment.

For measurements of propagative UHF tags (ISO/IEC 18000-6) an anechoic chamber is the recommended test environment.

For measurement of inductive tags a typical laboratory environment is sufficient, where consideration is given to minimize the impact of electromagnetic sources that may influence the results.

5.4 Pre-conditioning

Where pre-conditioning is required by the test method, the identification tags to be tested shall be conditioned to the test environment for a period of 24 hours before testing.

5.5 Default tolerance

Unless otherwise specified, a default tolerance of +/- 5 % shall be applied to the quantity values given to specify the characteristics of the test equipment (e.g. linear dimensions) and the test method procedures (e.g. test equipment adjustments).

5.6 Total measurement uncertainty

The total measurement uncertainty for each quantity determined by these test methods shall be stated in the test report.

NOTE Basic information is given in “ISO Guide to the Expression of Uncertainty in Measurement”, ISBN 92-67-10188-9, 1993.

5.7 Test result reporting

Each test result shall be reported with the number of samples, minimum value, maximum value, mean value and standard deviation.

For measurement curves additionally to the curves on minimum value, maximum value, mean value and standard deviation, the individual curves of 5 randomly selected measured devices shall be shown in a figure as well.

5.8 Test mounting material

For UHF tags, the tests may be performed with or without applied mounting material. When the mounting material is defined by the tag manufacturer, the tests shall be performed with the specified mounting material and in the free air.

© ISO/IEC 2007 – All rights reserved

Copyright International Organization for Standardization
Provided by IHS under license with ISO
No reproduction or networking permitted without license from IHS
Not for Resale

If the dielectric parameter or other critical parameters of material are known they should be notified in the test report.

5.9 Test communication parameters

All the tests can be done for various communication parameters (forward and return link). The tests conditions shall be recorded in the test report.

5.10 Test equipment limits

Test equipment for survivability field maximum level shall be able to handle the maximum level declared by the product vendor. It shall be ensured that the test equipment is not limiting the performance measurement.

5.11 Human exposure to EMF

High magnetic or electromagnetic field strength may exceed the limits of maximum permissible human exposure to EMF, which should be considered accordingly. FCC guidelines for MPE and SAR or EC 1999/519/CE are examples for relevant documents.

6 Setup of test equipment for tag test

6.1 Test apparatus and test circuits for ISO/IEC 18000-2 tags

This clause defines the test apparatus and test circuits for verifying the operation of a tag according to the base standard ISO/IEC 18000-2. The test set-ups used shall be as described in ISO/IEC TR 18047-2.

6.2 Test apparatus and test circuits for ISO/IEC 18000-3 tags

This clause defines the test apparatus and test circuits for verifying the operation of a tag according to the base standard ISO/IEC 18000-3. The test set-ups used shall be as described in ISO/IEC TR 18047-3.

As the test apparatus described in ISO/IEC TR 18047-3 is only designed for a magnetic field strength up to 5 A/m the test set-ups as described in Annex B shall be used for magnetic field strength >5 A/m.

6.3 Test apparatus and test circuits for ISO/IEC 18000-6 tags

6.3.1 Propagative UHF tags measurement

This clause defines the test apparatus and test circuits for verifying the operation of a tag according to the base standard ISO/IEC 18000-6. The test set-up used for measurement of propagative UHF tags shall be as described in ISO/IEC TR 18047-6.

6.3.1.1 Antenna polarization

For propagative UHF tests, a linear polarized antenna shall be used, except when testing tags that have more than one antenna or for sensitivity degradation measurements, in which case a circularly polarized antenna shall be used. The circularly polarized antenna shall have an axial ratio that is less than 1 dB over the frequency and orientation ranges of the testing.

© ISO/IEC 2007 – All rights reserved
Copyright International Organization for Standardization
Provided by IHS under license with ISO
No reproduction or networking permitted without license from IHS
Not for Resale

6.3.1.2 Test set-up for interference rejection measurement of propagative UHF tags

Figure 1 shows the test set-up arrangement for interference rejection measurement:

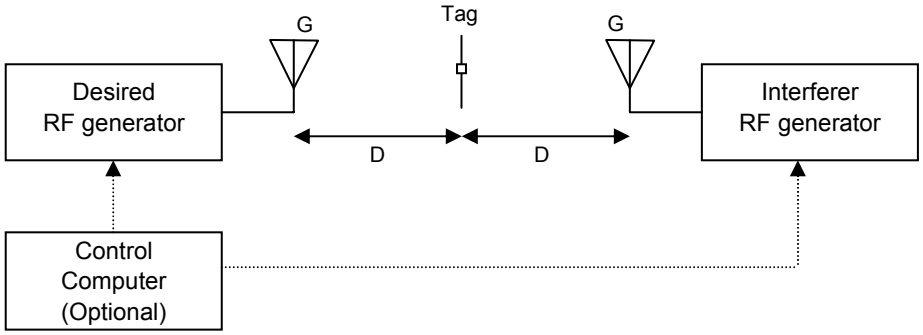

Figure 1 — Test set-up for interference rejection measurement

For this test, the tag under test shall be placed at the same distance D from the two RF generators and oriented for optimum field strength reception. The distance D shall be as follows: $D > \frac{2L^2}{\lambda}$ with L being the maximum dimension of the RF generator antenna.

The antennas shall be the same with gain G known, linearly polarized and with VSWR <1:1,5.

6.3.2 Inductive UHF tags measurement

This clause defines the test apparatus and test circuits for verifying the operation of a tag according to the base standard, ISO/IEC 18000-6. The test set-up used for measurement of inductive UHF tags is shown in Annex C.

6.4 Test apparatus and test circuits for ISO/IEC 18000-7 tags

This clause defines the test apparatus and test circuits for verifying the operation of a tag according to the base standard, ISO/IEC 18000-7. The test set-ups used shall be as described in ISO/IEC TR 18047-7.

7 Functional tests for inductive tags as defined in ISO/IEC 18000-2, ISO/IEC 18000-3 and ISO/IEC 18000-6

7.1 Identification magnetic field threshold ($H_{THR\ Identification}$)

7.1.1 Purpose

The purpose of this test is to determine the threshold level of magnetic field strength required for tag identification. As the tag needs energy to operate, it has to be supplied by the magnetic field. The identification magnetic field threshold, $H_{THR\ Identification}$, is the minimum field strength allowing tag identification.

7.1.2 Test procedure

At a fixed frequency as allowed by the regulation, the magnetic field strength of the generating field shall be varied from zero until modulation of the tag is detected and the tag is identified.

7.1.2.1 ISO/IEC 18000-2 compliant tag

The selection of system parameters shall be done in order to challenge the tag energy supply.

© ISO/IEC 2007 – All rights reserved

Copyright International Organization for Standardization
Provided by IHS under license with ISO
No reproduction or networking permitted without license from IHS
Not for Resale

Identification magnetic field threshold, $H_{THR\ Identification}$, measurement procedure:

1) The waveform generator shall be set to the required operating frequency of 125 kHz or 134,2 kHz.

2) The waveform generator amplitude shall be set to a value below the identification magnetic field threshold. This amplitude is typically zero.

3) The tag shall be inserted in the test equipment.

4) An inventory command shall be continuously sent with the code generator and the amplitude shall be increased after each inventory command until the complete UII can be measured with the Helmholtz equipment coils.

5) The data transfer shall be verified by comparison with ISO/IEC 18000-2. In case the tag response is wrong, then step 4) shall be repeated with higher amplitude.

6) The tag shall be removed from the test equipment.

7) The magnetic field strength H for the individual tag shall be calculated by use of the measurement U_{RHTA}.

The measurements shall be performed on all tags. $H_{THR\ Identification}$ shall be the highest value of all measured magnetic field strength H for the individual tags.

7.1.2.2 ISO/IEC 18000-3 compliant tag

The selection of system parameters shall be done in order to challenge the tag energy supply.

Identification magnetic field threshold, $H_{THR\ Identification}$, measurement procedure:

1) The waveform generator shall be set to the required operating frequency of 13,56 MHz.

2) The waveform generator amplitude shall be set to a value below the identification magnetic field threshold. This amplitude is typically zero.

3) The tag shall be inserted in the test equipment.

4) An inventory command shall be continuously sent with the code generator and the amplitude shall be increased after each inventory command until the complete UII can be measured with the sense coils.

5) The data transfer shall be verified by comparison with ISO/IEC 18000-3. In case the tag response is wrong, then step 4) shall be repeated with higher amplitude.

6) The tag shall be removed from the test equipment and the calibration coil shall be inserted in the test equipment.

7) The magnetic field strength H for the individual tag shall be calculated by use of the measurement made on the calibration coil.

The measurements shall be performed on all tags. $H_{THR\ Identification}$ shall be the highest value of all measured magnetic field strength H for the individual tags.

7.1.2.3 ISO/IEC 18000-6 compliant tag

The selection of system parameters shall be done in order to challenge the tag energy supply.

© ISO/IEC 2007 – All rights reserved
Copyright International Organization for Standardization
Provided by IHS under license with ISO
No reproduction or networking permitted without license from IHS
Not for Resale

Identification magnetic field threshold, $H_{THR\ Identification}$, measurement procedure:

1) The waveform generator shall be set to the required operating frequency (860 MHz to 960 MHz in 5 MHz steps, with additional tests at 866 MHz, 922 MHz, and 953 MHz).

2) The waveform generator amplitude shall be set to a value below the identification magnetic field threshold. This amplitude is typically zero.

3) The tag shall be inserted in the equipment test.

4) An inventory command shall be continuously sent with the code generator and the amplitude shall be increased after each inventory command until the complete UII can be measured with the test antenna

5) The data transfer shall be verified by comparison with ISO/IEC 18000-6. In case the tag response is wrong, then step 4) shall be repeated with higher amplitude.

6) The tag shall be removed from the test equipment and the calibration coil shall be inserted in the test equipment.

7) The magnetic field strength H for the individual tag shall be calculated by use of the measurement made on the calibration coil.

The measurements shall be performed on all tags. The $H_{THR\ Identification}$ value is the highest magnetic field strength of all measurements.

7.1.3 Test report

The test report shall give the measured identification magnetic field threshold $H_{THR\ Identification}$, the environment conditions and communication parameters. All these parameters shall be recorded according to the example in Table 1.

Table 1 — Parameters that shall be recorded for this measurement

Test: Identification magnetic field threshold ($H_{THR\ Identification}$)		
Temperature:	Humidity:	
Tag Protocol:	Tag UII:	
Forward Link		
Modulation index: %	Data rate: kbps	Data coding:
Full command code: 0x		
Return Link		
Data rate: kbps	Data coding:	
Test Results		
$H_{THR\ Identification}$	**xx,xx mA/m**	

7.2 Reading magnetic field threshold ($H_{THR\ Read}$)

7.2.1 Purpose

The purpose of this test is to determine the threshold level of magnetic field strength that allows a tag reading. In order to successfully read tag data, the command need to be transmitted correctly and enough energy (flux density) shall be available to read the tag. The reading magnetic field threshold, $H_{THR\ Read}$, is the minimum magnetic field strength allowing tag reading.

7.2.2 Test procedure

At a fixed frequency the magnetic field strength of the generating field has to be varied from zero until a reading of block user memory is possible. The reading shall be performed on the first and the last block

© ISO/IEC 2007 – All rights reserved

Copyright International Organization for Standardization
Provided by IHS under license with ISO
No reproduction or networking permitted without license from IHS
Not for Resale

memory address with a read single block command. Beforehand, all blocks of the user memory shall be filled with data having the same number of 1 and 0 uniformly distributed. (i.e. by using the binary digits represented by the byte sequence 5A hex, 3C hex, 0F hex and F0 hex throughout the memory for a four bytes memory block).

7.2.2.1 ISO/IEC 18000-2 compliant tag

The selection of system parameters shall be done in order to challenge the tag energy supply.

Reading magnetic field threshold, $H_{THR\ Read}$, measurement procedure:

1) The waveform generator shall be set to the required operating frequency of 125 kHz or 134,2 kHz.

2) The waveform generator amplitude shall be set to a value below the identification magnetic field threshold. This amplitude is typically zero.

3) The tag shall be inserted in the test equipment.

4) A read single block command shall be continuously sent to the first block address with the code generator and the amplitude shall be increased after each read single block command until the complete tag response can be measured with the Helmholtz equipment coils.

5) The data transfer shall be verified by comparison with ISO/IEC 18000-2. In case the tag response is wrong, then step 4) shall be repeated with higher amplitude.

6) The tag shall be removed from the test equipment.

7) The magnetic field strength H for the individual tag shall be calculated by use of the measurement U_{RHTA}.

8) Repeat steps 3) to 7) with the read single block command sent to the last block address.

The measurements shall be performed on all tags. $H_{THR\ Read}$ shall be the highest value of all measured magnetic field strength H for the individual tags.

7.2.2.2 ISO/IEC 18000-3 compliant tag

The selection of system parameters shall be done in order to challenge the tag energy supply.

Reading magnetic field threshold, $H_{THR\ Read}$, measurement procedure:

1) The waveform generator shall be set to the required operating frequency of 13,56 MHz.

2) The waveform generator amplitude shall be set to a value below the identification magnetic field threshold. This amplitude is typically zero.

3) The tag shall be inserted in the test equipment.

4) A read single block command shall be continuously sent to the first block address with the code generator and the amplitude shall be increased after each read single block command until the complete tag response can be measured with the sense coils.

5) The data transfer shall be verified by comparison with ISO/IEC 18000-3. In case the tag response is wrong, then step 4) shall be repeated with higher amplitude.

6) The tag shall be removed from the test equipment and the calibration coil shall be inserted in the test equipment.

--`,,```,,,,````-`-`,,`,,`,`,,`---

© ISO/IEC 2007 – All rights reserved
Copyright International Organization for Standardization
Provided by IHS under license with ISO
No reproduction or networking permitted without license from IHS
Not for Resale

7) The magnetic field strength H for the individual tag shall be calculated by use of the measurement made on the calibration coil.

8) The steps 3) to 7) shall be repeated with the read single block command sent to the last block address.

The measurements shall be performed on all tags. $H_{THR\ Read}$ shall be the highest value of all measured magnetic field strength H for the individual tags.

7.2.3 Test report

The test report shall give the measured reading magnetic field threshold $H_{THR\ Read}$, the environment conditions and communication parameters. All these parameters shall be recorded according to the example in Table 2.

Table 2 — Parameters that shall be recorded for this measurement

Test: Reading magnetic field threshold ($H_{THR\ Read}$)		
Temperature:	Humidity:	
Tag Protocol:	Tag UII:	
Forward Link		
Modulation index:%	Data rate: kbps	Data coding:
Block number:		
Command: 0x		
Return Link		
Data rate: kbps	Data coding:	
Data block size: bytes	Data read:	
Test Results		
$H_{THR\ Read}$	**xx,xx mA/m**	

7.3 Writing magnetic field threshold ($H_{THR\ Write}$)

7.3.1 Purpose

The purpose of this test is to determine the threshold level of magnetic field strength that allows tag writing. In order to successfully write data into the tag, the data shall be transmitted correctly and enough energy (flux density) shall be available during the memory access. The writing magnetic field threshold, $H_{THR\ Write}$, is the minimum magnetic field strength allowing writing into the tag.

7.3.2 Test procedure

At a fixed frequency the magnetic field strength of the generating field has to be varied from zero until a writing of block user memory is possible. The writing shall be performed on the first and the last block memory address with a write single block command. The data shall have the same number of 1 and 0 uniformly distributed and its size equal to the block size. (i.e by using the binary digits represented by the byte sequence 5A hex, 3C hex, 0F hex and F0 hex throughout the memory for a four bytes memory block).

7.3.2.1 ISO/IEC 18000-2 compliant tag

The selection of system parameters shall be done in order to challenge the tag energy supply.

Writing magnetic field threshold, $H_{THR\ Write}$, measurement procedure:

1) The waveform generator shall be set to the required operating frequency of 125 kHz or 134,2 kHz.

2) The waveform generator amplitude shall be set to a value below the identification magnetic field threshold. This amplitude is typically zero.

© ISO/IEC 2007 – All rights reserved

Copyright International Organization for Standardization
Provided by IHS under license with ISO
No reproduction or networking permitted without license from IHS
Not for Resale

3) The tag shall be inserted in the test equipment.

4) A write single block command shall be continuously sent to the first block address with the code generator and the amplitude shall be increased after each write single block command until the complete tag response can be measured with the Helmholtz equipment coils.

5) The data transfer shall be verified by comparison with ISO/IEC 18000-2. In case the tag response is wrong, then step 4) shall be repeated with higher amplitude.

6) The tag shall be removed from the test equipment.

7) The magnetic field strength H for the individual tag shall be calculated by use of the measurement U_{RHTA}.

8) The steps 3) to 7) shall be repeated with the write single block command sent to the last block address.

The measurements shall be performed on all tags. $H_{THR\ Write}$ shall be the highest value of all measured magnetic field strength H for the individual tags.

7.3.2.2 ISO/IEC 18000-3 compliant tag

The selection of system parameters shall be done in order to challenge the tag energy supply.

Writing magnetic field threshold, $H_{THR\ Write}$, measurement procedure:

1) The waveform generator shall be set to the required operating frequency of 13,56 MHz.

2) The waveform generator amplitude shall be set to a value below the identification magnetic field threshold. This amplitude is typically zero.

3) The tag shall be inserted in the test equipment.

4) A write single block command shall be continuously sent to the first block address with the code generator and the amplitude shall be increased after each write single block command until the complete tag response can be measured with the sense coils.

5) The data transfer shall be verified by comparison with ISO/IEC 18000-3. In case the tag response is wrong, then step 4) shall be repeated with higher amplitude.

6) The tag shall be removed from the test equipment and the calibration coil shall be inserted in the test equipment.

7) The magnetic field strength H for the individual tag shall be calculated by use of the measurement made on the calibration coil.

8) The steps 3) to 7) shall be repeated with the write single block command sent to the last block address.

The measurements shall be performed on all tags. $H_{THR\ Write}$ shall be the highest value of all measured magnetic field strength H for the individual tags.

7.3.2.3 ISO/IEC 18000-6 compliant tag

The selection of system parameters shall be done in order to challenge the tag energy supply.

© ISO/IEC 2007 – All rights reserved
Copyright International Organization for Standardization
Provided by IHS under license with ISO
No reproduction or networking permitted without license from IHS
Not for Resale

Writing magnetic field threshold, $H_{THR\ Write}$, measurement procedure:

1) The waveform generator shall be set to the required operating frequency (860 MHz to 960 MHz in 5 MHz steps, with additional tests at 866 MHz, 922 MHz, and 953 MHz).

2) The waveform generator amplitude shall be set to a value below the identification magnetic field threshold. This amplitude is typically zero.

3) The tag shall be inserted in the equipment test.

4) A write command shall be continuously sent to the first writeable word of UII memory with the code generator and the amplitude shall be increased after each write command until the complete UII can be written.

5) The data transfer shall be verified by comparison with ISO/IEC 18000-6. In case the tag response is wrong, then step 4) shall be repeated with higher amplitude.

6) The tag shall be removed from the test equipment and the calibration coil shall be inserted in the test equipment.

7) The magnetic field strength H for the individual tag shall be calculated by use of the measurement made on the calibration coil.

The measurements shall be performed on all tags. The $H_{THR\ Write}$ value is the highest magnetic field strength of all measurements.

7.3.3 Test report

The test report shall give the measured writing magnetic field threshold $H_{THR\ Write}$, the environment conditions and communication parameters. All these parameters shall be recorded according to the example in Table 3.

Table 3 — Parameters that shall be recorded for this measurement

Test: Writing magnetic field threshold ($H_{THR\ Write}$)		
Temperature:	Humidity:	
Tag Protocol:	Tag UII:	
Forward Link		
Modulation index: %	Data rate: kbps	Data coding:
Block number:	Data block size: bytes	Data written:
Command: 0x		
Return Link		
Data rate: kbps	Data coding:	
Test Results		
$H_{THR\ Write}$	**xx,xx mA/m**	

7.4 Maximum operating magnetic field (H_{max})

7.4.1 Purpose

The purpose of this test is to determine the maximum magnetic field H_{max} allowing the tag identification.

7.4.2 Test procedure

At a fixed frequency the magnetic field strength of the generating field has to be increased from identification magnetic field threshold ($H_{THR\ Identification}$) until an identification of the tag is not possible. The maximum operating magnetic field strength (H_{max}) is the maximum magnetic field allowing tag identification.

As this test may be destructive a different lot of samples shall be used.

© ISO/IEC 2007 – All rights reserved

Copyright International Organization for Standardization
Provided by IHS under license with ISO
No reproduction or networking permitted without license from IHS
Not for Resale

7.4.2.1 ISO/IEC 18000-2, ISO/IEC 18000-3 and ISO 18000-6 compliant tag

Maximum operating magnetic field, H_{max}, measurement procedure:

1) The waveform generator shall be set to the required operating frequency, at the relevant standard, of 125 kHz; 134,2 kHz; 13,56 MHz; or 860 MHz to 960 MHz in 5 MHz steps, with additional tests at 866 MHz, 922 MHz, and 953 MHz.

2) The waveform generator amplitude shall be set to the value of identification magnetic field threshold ($H_{THR\ Identification}$).

3) The tag shall be inserted in the test equipment.

4) The tag shall be left under the magnetic field strength during 30 seconds.

5) An inventory command shall be sent with the code generator to check if the tag can return its response. The data transfer shall be verified by comparison with ISO/IEC protocol standard.

6) The waveform amplitude shall be set to the value of identification magnetic field threshold ($H_{THR\ Identification}$), and the tag shall be left under this magnetic field strength for 5 seconds.

7) The magnetic field strength shall be increased.

8) The steps 4) to 8) shall be repeated until the tag can't return its response, then note the magnetic field strength H for the individual tag.

The measurements shall be performed on 10 tags. H_{max} shall be the lowest value of all measured magnetic field strength H for the individual tags.

7.4.3 Test report

The test report shall give the measured maximum operating magnetic field H_{max}, the environment conditions and communication parameters. All these parameters shall be recorded according to the example in Table 4.

Table 4 — Parameters that shall be recorded for this measurement

Test: Maximum magnetic operating field(H_{max})		
Temperature:	Humidity:	
Tag Protocol:	Tag UII:	
Forward Link		
Modulation index: %	Data rate: kbps	Data coding:
Command: 0x		
Return Link		
Data rate: kbps	Data coding:	
Test Results		
H_{max}	**xx,xx A/m**	

7.5 Survival magnetic field ($H_{Survival}$)

7.5.1 Purpose

The purpose of this test is to determine the maximum magnetic field ($H_{Survival}$) value at which the tag stops operating when exposed to this high value, even if the operating magnetic field is reduced to a value in the range between $H_{THR\ Identification}$ and H_{max} afterwards.

© ISO/IEC 2007 – All rights reserved
Copyright International Organization for Standardization
Provided by IHS under license with ISO
No reproduction or networking permitted without license from IHS
Not for Resale

7.5.2 Test procedure

At a fixed frequency the magnetic field strength of the generating field has to be increased from identification magnetic field threshold ($H_{THR\ Identification}$) until the tag destruction. The survival magnetic field ($H_{Survival}$) is the maximum magnetic field before tag destruction.

As this test is destructive a different lot samples shall be used.

7.5.2.1 ISO/IEC 18000-2, ISO/IEC 18000-3 and ISO/IEC 18000-6 compliant tag

Survival magnetic field, $H_{Survival}$, measurement procedure:

1) The waveform generator shall be set to the required operating frequency, at the relevant standard, of 125 kHz; 134,2 kHz; 13,56 MHz; or 860 MHz to 960 MHz in 5 MHz steps, with additional tests at 866 MHz, 910 MHz, 922 MHz, and 953 MHz.

2) The waveform generator amplitude shall be set to the value of identification magnetic field threshold ($H_{THR\ Identification}$).

3) The tag shall be inserted in the test equipment.

4) The tag shall be left under the magnetic field during 30 seconds.

5) The waveform amplitude shall be set to the value of identification magnetic field threshold ($H_{THR\ Identification}$).

6) An inventory command shall be sent with the code generator to check if the tag can return its response. The data transfer shall be verified by comparison with ISO/IEC protocol standard.

7) The tag shall be left under this magnetic field for 5 seconds.

8) The magnetic field strength shall be increased.

9) The steps 4) to 8) shall be repeated until the tag can't return its response, then note the magnetic field strength H for the individual tag, record the previous value.

The measurements shall be performed on 10 tags. $H_{Survival}$ shall be the lowest value of all measured magnetic field strength H for the individual tags.

7.5.3 Test report

The test report shall give the measured maximum operating magnetic field $H_{Survival}$, the environment conditions and communication parameters. All these parameters shall be recorded according to the example in Table 5.

Table 5 — Parameters that shall be recorded for this measurement

Test: Survival magnetic field ($H_{SURVIVAL}$)		
Temperature:	Humidity:	
Tag Protocol:	Tag UII:	
Forward Link		
Modulation index: %	Data rate: kbps	Data coding:
Command: 0x		
Return Link		
Data rate: kbps	Data coding:	
Test Results		
$H_{Survival}$	**xx,xx A/m**	

© ISO/IEC 2007 – All rights reserved

Copyright International Organization for Standardization
Provided by IHS under license with ISO
No reproduction or networking permitted without license from IHS
Not for Resale

7.6 Load modulation (L_m)

7.6.1 Purpose

The purpose of this test is to determine the amplitude of the load modulation signal within the operating magnetic field range.

7.6.2 Test procedure

At a fixed frequency the magnetic field strength of the generating field has to be increased from identification magnetic field threshold ($H_{THR\ Identification}$) to maximum operating magnetic field (H_{max}) with a step size of 1 A/m for ISO/IEC 18000-2 compliant tags and with a regular step of 0,5 A/m for ISO/IEC 18000-3 compliant tags, and with a regular step of 0,1 A/m for ISO/IEC 18000-6 compliant tags. The tag load modulation shall be calculated according to the load modulation conformance measurement for the steps of magnetic field strength.

7.6.2.1 ISO/IEC 18000-2 compliant tag

Load modulation signal measurement procedure:

1) The waveform generator shall be set to the required operating frequency of 125 kHz or 134,2 kHz.

2) The waveform amplitude shall be set to the value of identification magnetic field threshold ($H_{THR\ Identification}$).

3) The tag shall be inserted in the test equipment.

4) An inventory command shall be sent with the code generator.

5) The load modulation for the individual tag shall be calculated by use of the measurement made with the test equipment according the conformance procedure of ISO/IEC TR 18047-2.

6) The magnetic field strength shall be increased to the next value and the load modulation measurement for the individual tag shall be calculated for each magnetic field strength step until maximum operating field (H_{max}).

For each magnetic field strength steps, the load modulation L_m shall be the lowest value of all load modulation calculated for the individual tags.

7.6.2.2 ISO/IEC 18000-3 compliant tag

Load modulation signal measurement procedure:

1) The waveform generator shall be set to the required operating frequency of 13,56 MHz.

2) The waveform generator amplitude shall be set to the value of identification magnetic field threshold ($H_{THR\ Identification}$).

3) The tag shall be inserted in the test equipment.

4) An inventory command shall be sent with the code generator.

5) The load modulation for the individual tag shall be calculated by use of the measurement made with the test equipment according to the conformance procedure of ISO/IEC TR 18047-3.

6) The magnetic field strength shall be increased to the next value and the load modulation measurement for the individual tag shall be calculated for each magnetic field strength step until maximum operating field (H_{max}).

© ISO/IEC 2007 – All rights reserved
Copyright International Organization for Standardization
Provided by IHS under license with ISO
No reproduction or networking permitted without license from IHS
Not for Resale

For each magnetic field strength steps, the load modulation L_m shall be the lowest value of all load modulation calculated for the individual tags.

7.6.2.3 ISO/IEC 18000-6 compliant tag

Load modulation signal measurement procedure:

1) The waveform generator shall be set to the operating frequency (860 MHz to 960 MHz in 5 MHz steps, with additional tests at 866 MHz, 922 MHz, and 953 MHz).

2) The waveform generator amplitude shall be set to the value of the identification magnetic field threshold ($H_{THR\ Identification}$).

3) The tag shall be inserted in the test equipment.

4) An inventory command shall be sent with code generator.

5) The load modulation for the individual tag shall be calculated by use of the measurement made with the test antenna.

6) The magnetic field strength shall be increased to the next value and the load modulation measurement for the individual tag shall be calculated for each magnetic field strength step until maximum operating field (H_{max}).

For each magnetic field strength steps, the load modulation L_m shall be the lowest value of all load modulation calculated for the individual tags.

7.6.3 Test report

The test report shall give the tag load modulation signal values (upper and lower sidebands) from identification magnetic field threshold ($H_{THR\ Identification}$) to the maximum operating magnetic field (H_{max}), the environmental conditions and communication parameters. All these parameters shall be recorded according to the example in Table 6.

Table 6 — Parameters that shall be recorded for this measurement

Test: Load modulation (L_m)		
Temperature:	Humidity:	
Tag Protocol:	Tag UII:	
Forward Link		
Modulation index: %	Data rate: kbps	Data coding:
Command: 0x		
Return Link		
Data rate: kbps	Data coding:	
Data block size: bytes	Data read:	
Test Results		
Load modulation values for upper sideband :		
$L_{m\ UPPER}$ @ $H_{THR\ Identification}$	**xx,xx mV**	
$L_{m\ UPPER}$ @ xx mA/m	**xx,xx mV**	
Load modulation values for lower sideband :		
$L_{m\ LOWER}$ @ $H_{THR\ Identification}$	**xx,xx mV**	
$L_{m\ LOWER}$ @ xx mA/m	**xx,xx mV**	
...	**…**	

© ISO/IEC 2007 – All rights reserved

Copyright International Organization for Standardization
Provided by IHS under license with ISO
No reproduction or networking permitted without license from IHS
Not for Resale

Load modulation curve (optional) :

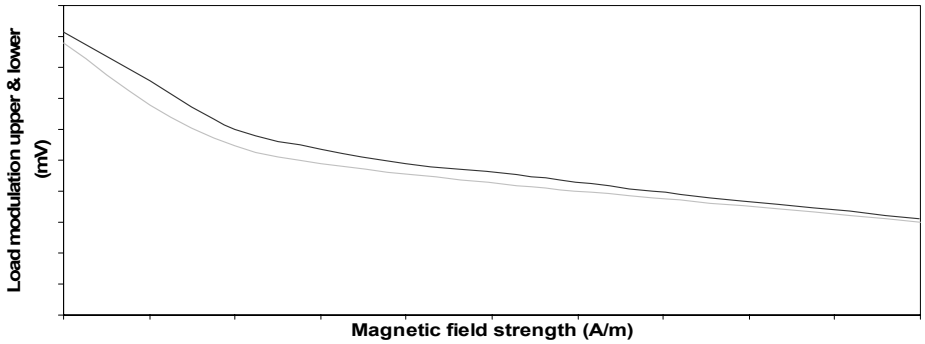

8 Functional tests for propagative tags as defined in ISO/IEC 18000-6

8.1 Identification electromagnetic field threshold ($E_{THR\ Identification}$) and frequency peak(s)

8.1.1 Purpose

The purpose of this test is to determine the electromagnetic field threshold level required for tag identification. As the tag needs energy to operate, it has to be supplied by the electromagnetic field. The identification electromagnetic field threshold, $E_{THR\ Identification}$, is the minimum electromagnetic field allowing tag identification.

8.1.2 Test procedure

For the ISO/IEC 18000-6 frequency band from 860 to 960 MHz, the electromagnetic field strength of the generating field has to be varied from zero until modulation of the tag is detected and the tag responds. This test shall be done with a frequency step of 5 MHz from 860 MHz to 960 MHz and also for the four test frequencies defined in ISO/IEC TR 18047-6 (866 MHz; 910 MHz; 922 MHz; 953 MHz).

The selection of system parameters shall be done in order to challenge the tag energy supply.

Identification electromagnetic field threshold, $E_{THR\ identification}$, and frequency peak measurement procedure:

1) The waveform generator shall be set to the required operating frequency of 860 MHz.

2) The waveform generator amplitude shall be set to a value below the identification electromagnetic field threshold. This amplitude is typically zero.

3) The tag shall be inserted in the test equipment.

4) A command shall be continuously sent with the code generator and the amplitude shall be increased after each command until the complete UII can be measured.

5) The data transfer shall be verified by comparison with ISO/IEC 18000-6. In case the tag response is wrong, then step 4) shall be repeated with higher amplitude.

6) The electromagnetic field strength E for the individual tag shall be calculated by use of the waveform generator amplitude.

7) The steps 1) to 6) shall be repeated by increasing the frequency to the next frequency step and for the four test frequencies defined in ISO/IEC TR 18047-6 (866 MHz; 910 MHz; 922 MHz; 953 MHz).

--`,,```,,,,````-`-`,,`,,`,`,,`---
Copyright International Organization for Standardization
Provided by IHS under license with ISO
No reproduction or networking permitted without license from IHS
© ISO/IEC 2007 – All rights reserved
Not for Resale

The measurements shall be performed on all tags. $E_{THR\ Identification}$ shall be the highest value of all measured electromagnetic field strength E for the individual tags.

8.1.3 Test report

The test report shall give for the full band of ISO/IEC 18000-6 from 860 to 960 MHz, and for the four test frequencies defined in ISO/IEC TR 18047-6, $E_{THR\ Identification}$ versus frequency curves, the frequency peak(s) and the –3 dB bandwidth for each peak plus the environmental conditions and communication parameters. All parameters shall be recorded according to the example in Table 7.

NOTE The frequency peak is the frequency that corresponds to the minimum of $E_{THR\ Identification}$.

Table 7 — Parameters that shall be recorded for this measurement

Test: Identification electromagnetic field threshold ($E_{THR\ Identification}$) and frequency peak(s)		
Mounting Material:		
Temperature:	Humidity:	
Tag Protocol:	Tag UII:	
Forward Link		
Modulation index: %	Data rate: kbps	Data coding:
Command: 0x		
Return Link		
Data rate: kbps	Data coding:	
Test Results		
Frequency	**-3 db BW**	**$E_{THR\ Identification}$**
xxx MHz	**xx MHz**	**xx,xx V/m**
…	**…**	**…**

$E_{THR\ IDENTIFICATION}$ versus frequency curve:

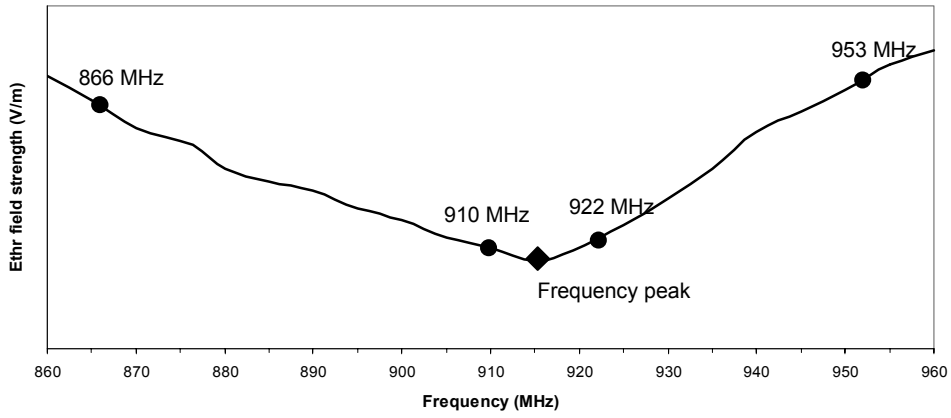

8.2 Reading electromagnetic field threshold ($E_{THR\ Read}$)

8.2.1 Purpose

The purpose of this test is to determine the threshold level of electromagnetic field that allows a tag reading. In order to successfully read tag data, the command shall be transmitted correctly and enough energy shall be available to read the tag. The reading electromagnetic field threshold, $E_{THR\ Read}$, is the minimum electromagnetic field allowing tag reading.

8.2.2 Test procedure

For each tag frequency peak and for the four test frequencies defined in ISO/IEC TR 18047-6 (866 MHz; 910 MHz; 922 MHz; 953 MHz), the electromagnetic field of the generating field has to be varied from zero until

© ISO/IEC 2007 – All rights reserved

Copyright International Organization for Standardization
Provided by IHS under license with ISO
No reproduction or networking permitted without license from IHS
Not for Resale

a reading of the memory is possible; the reading shall be performed on the first and the last memory address with a read command. Beforehand, the memory shall be filled with data having the same number of 1 and 0 uniformly distributed. (i.e. by using the binary digits represented by the byte sequence 5A hex, 3C hex, 0F hex and F0 hex throughout the memory for a four bytes memory block).

For this test the memory shall be the user memory, or in case not available any other memory that is not the UII memory.

The selection of system parameters shall be done in order to challenge the tag energy supply.

Reading electromagnetic field threshold, $E_{THR\ Read}$, measurement procedure:

1) The waveform generator shall be set to the required operating frequency of 866 MHz.

2) The waveform generator amplitude shall be set to a value below the identification electromagnetic field threshold. This amplitude is typically zero.

3) The tag shall be inserted in the test equipment.

4) A read single block shall be continuously sent with the code generator to the first address memory command and the amplitude shall be increased after each read single block command until the complete tag response can be measured.

5) The data transfer shall be verified by comparison with ISO/IEC 18000-6. In case the tag response is wrong, then step 4) shall be repeated with higher amplitude.

6) The electromagnetic field strength E for the individual tag shall be calculated by use of the waveform generator amplitude.

7) The steps 3) to 6) shall be repeated with the read single block command sent to the last block address.

8) The steps 1) to 7) shall be repeated for the three test frequencies 910 MHz, 922 MHz, 953 MHz and for each frequency peak.

The measurements shall be performed on all tags. $E_{THR\ Read}$ shall be the highest value of all measured electromagnetic field strength E for the individual tags.

8.2.3 Test report

The test report shall give the measured reading electromagnetic field threshold $E_{THR\ Read}$ for each frequency peak and for the four test frequencies defined in ISO/IEC TR 18047-6 (866 MHz; 910 MHz; 922 MHz; 953 MHz), plus the environmental conditions and communication parameters. All these parameters shall be recorded according to the example in Table 8.

© ISO/IEC 2007 – All rights reserved
Copyright International Organization for Standardization
Provided by IHS under license with ISO
No reproduction or networking permitted without license from IHS
Not for Resale

Table 8 — Parameters that shall be recorded for this measurement

Test: Reading electromagnetic field threshold ($E_{THR\ Read}$)		
Mounting Material:		
Temperature:	Humidity:	
Tag Protocol:	Tag UII:	
Forward Link		
Modulation index: %	Data rate: kbps	Data coding:
Command: 0x		
Return Link		
Data rate: kbps	Data coding:	
Data Block size: bytes	Data read : 0x	
Test Results		
Frequency	**$E_{THR\ Read}$**	
xxx MHz	**xx,xx V/m**	
...	**…**	

8.3 Writing electromagnetic field threshold ($E_{THR\ Write}$)

8.3.1 Purpose

The purpose of this test is to determine the threshold level of electromagnetic field that allows a tag write operation. In order to successfully write data into the tag, the data shall be transmitted correctly and enough energy shall be available during the memory access. The writing electromagnetic field threshold ($E_{THR\ Write}$) is the minimum electromagnetic field allowing tag write operation.

8.3.2 Test procedure

For each tag frequency peak and for the four test frequencies defined in ISO/IEC TR 18047-6 (866 MHz; 910 MHz; 922 MHz; 953 MHz). the electromagnetic field of the generating field has to be varied from zero until a writing of block user memory is possible. The writing shall be performed on the first and the last block memory address with a write single block command. The data shall have the same number of 1 and 0 uniformly distributed and its size equal to the block size.

For this test the memory shall be the user memory, or in case not available any other memory that is not write protected.

The selection of system parameters shall be done in order to challenge the tag energy supply.

Writing electromagnetic field threshold, $E_{THR\ Write}$, measurement procedure:

1) The waveform generator shall be set to the required operating frequency of 866 MHz.

2) The waveform generator amplitude shall be set to a value below the identification electromagnetic field threshold. This amplitude is typically zero.

3) The tag shall be inserted in the test equipment.

4) A write single block to the first address memory command shall be continuously sent with the code generator and the amplitude shall be increased after each write single block command until the complete tag response can be measured.

5) The data transfer shall be verified by comparison with ISO/IEC 18000-6. In case the tag response is wrong, then step 4) shall be repeated with higher amplitude.

6) The electromagnetic field strength E for the individual tag shall be calculated by use of the waveform generator amplitude.

--`,,```,,,,````-`-`,,`,,`,`,,`---

© ISO/IEC 2007 – All rights reserved

Copyright International Organization for Standardization
Provided by IHS under license with ISO
No reproduction or networking permitted without license from IHS
Not for Resale

7) The steps 3) to 6) shall be repeated with the write single block command sent to the last block address.

8) The steps 1) to 7) shall be repeated for the three test frequencies 910 MHz, 922 MHz, 953 MHz and for each frequency peak.

The measurements shall be performed on all tags. $E_{THR\ Write}$ shall be the highest value of all measured electromagnetic field strength E for the individual tags.

8.3.3 Test report

The test report shall give the measured writing electromagnetic field threshold $E_{THR\ Write}$ for each frequency peak and for the four test frequencies defined in ISO/IEC TR 18047-6 (866 MHz; 910 MHz; 922 MHz; 953 MHz), plus the written data and the size of one single block, the environment conditions and communication parameters. All these parameters shall be recorded according to the example in Table 9.

Table 9 — Parameters that shall be recorded for this measurement

Test: Writing electromagnetic field threshold ($E_{THR\ Write}$)		
Mounting Material:		
Temperature :	Humidity:	
Tag Protocol:	Tag UII:	
Forward Link		
Modulation index: %	Data rate: kbps	Data coding:
Command:0x		
Return Link		
Data rate: kbps	Data coding:	
Data Block size: bytes	Data wrote : 0x	
Test Results		
Frequency	**$E_{THR\ Write}$**	
xxx MHz	**xx,xx V/m**	
...	**…**	

8.4 Sensitivity degradation ($S_{Degradation}$)

8.4.1 Purpose

The purpose of this test is to determine the sensitivity degradation (directivity) of the tag in various orientations (azimuth and elevation).

8.4.2 Test procedure

For each tag frequency peak and for the four test frequencies defined in ISO/IEC TR 18047-6 (866 MHz; 910 MHz; 922 MHz; 953 MHz), the electromagnetic field strength of the generated field has to be varied from zero until modulation of the tag is detected and the tag responds.

Sensitivity degradation, $S_{Degradation}$, measurement procedure:

1) The waveform generator shall be set to the required operating frequency of 866 MHz.

2) The waveform generator amplitude shall be set to a value below the identification electromagnetic field threshold. This amplitude is typically zero.

3) The tag shall be inserted in the test equipment at the reference point in optimal orientation. Furthermore, flat tags shall be placed with the flat side facing the measurement antenna. The optimal (reference) orientation shall be the orientation of maximum sensitivity.

© ISO/IEC 2007 – All rights reserved
Copyright International Organization for Standardization
Provided by IHS under license with ISO
No reproduction or networking permitted without license from IHS
Not for Resale

4) A command shall be continuously sent with the code generator and the amplitude shall be increased after each command until the complete UII can be measured.

5) The data transfer shall be verified by comparison with ISO/IEC 18000-6. In case the tag response is wrong, then step 4) shall be repeated with higher amplitude.

6) The electromagnetic field strength E for the individual tag shall be calculated by use of the waveform generator amplitude.

7) The steps 3) to 6) shall be repeated for the tag azimuth orientations and the tag elevation orientations (see Figure 2 and Figure 3) with 15° step size over 90° (0°, 15°, 30°, …90°).

8) The steps 1) to 7) shall be repeated for the three test frequencies 910 MHz, 922 MHz, 953 MHz and for each frequency peak.

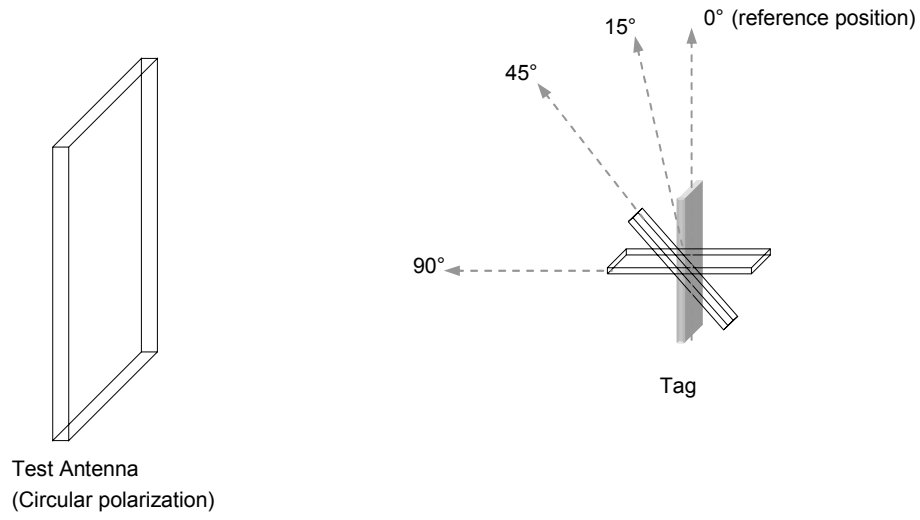

Figure 2 — Elevation tag orientations (Front view)

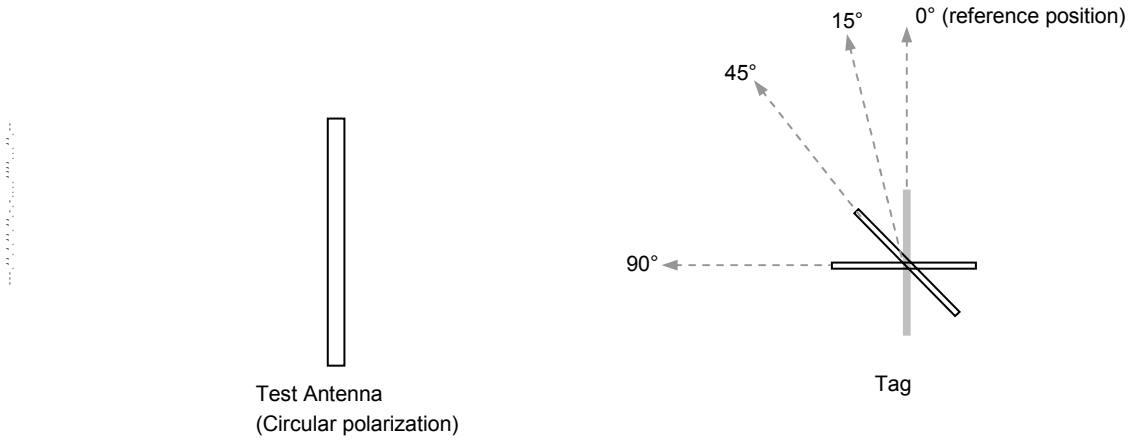

Figure 3 — Azimuth tag orientations (top view)

The measurements shall be performed on 10 tags. For each orientation step, the electromagnetic field strength threshold value is the highest value of all measured electromagnetic field strength E for the individual tags.

© ISO/IEC 2007 – All rights reserved
Copyright International Organization for Standardization
Provided by IHS under license with ISO
No reproduction or networking permitted without license from IHS
Not for Resale

8.4.3 Test report

The test report shall give electromagnetic field strength threshold value and curves (E versus Azimuth and E versus Elevation) for each frequency peak and for the four test frequencies defined in ISO/IEC TR 18047-6 (866 MHz; 910 MHz; 922 MHz; 953 MHz), plus the environmental conditions and communication parameters. All these parameters shall be recorded according to the example in Table 10.

Table 10 — Parameters that shall be recorded for this measurement

<table>
<tr><td colspan="5">Test: Sensitivity degradation ($S_{Degradation}$)</td></tr>
<tr><td colspan="5">Mounting Material:</td></tr>
<tr><td>Temperature:</td><td colspan="4">Humidity:</td></tr>
<tr><td>Tag Protocol:</td><td colspan="4">Tag UII:</td></tr>
<tr><td colspan="5">Forward Link</td></tr>
<tr><td>Modulation index:%</td><td colspan="2">Data rate: kbps</td><td colspan="2">Data coding:</td></tr>
<tr><td colspan="5">Command:0x</td></tr>
<tr><td colspan="5">Return Link</td></tr>
<tr><td>Data rate: kbps</td><td colspan="4">Data coding:</td></tr>
<tr><td colspan="5">Test Results</td></tr>
<tr><td colspan="5">1st Frequency: xxx MHz</td></tr>
<tr><td>E vs. Azimuth</td><td>-45°: xx,xx V/m</td><td>+45°: xx,xx V/m</td><td>-90°: xx,xx V/m</td><td>+90°: xx,xx V/m</td></tr>
<tr><td>E vs. Elevation</td><td>-45°: xx,xx V/m</td><td>+45°: xx,xx V/m</td><td>-90°: xx,xx V/m</td><td>+90°: xx,xx V/m</td></tr>
<tr><td colspan="5">2nd Frequency : xxx MHz</td></tr>
<tr><td colspan="5">…</td></tr>
<tr><td colspan="2">E_{THR} versus Azimuth curve:
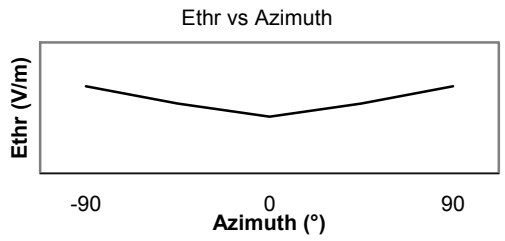
</td><td colspan="3">E_{THR} versus Elevation curve:
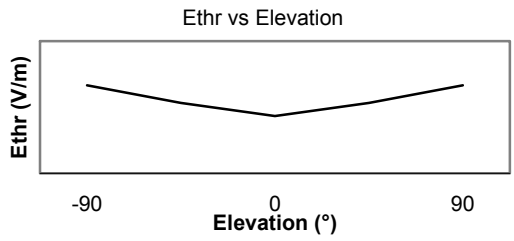
</td></tr>
</table>

8.5 Maximum operating electromagnetic field (E_{max})

8.5.1 Purpose

The purpose of this test is to determine the maximum electromagnetic field E_{max} allowing the tag identification.

8.5.2 Test procedure

For each tag frequency peak and for the four test frequencies defined in ISO/IEC TR 18047-6 (866 MHz; 910 MHz; 922 MHz; 953 MHz),the generating electromagnetic field strength has to be increased from identification electromagnetic field threshold ($E_{THR\ Identification}$) until an identification of the tag is not possible. The maximum operating electromagnetic field (E_{max}) is the maximum electromagnetic field allowing tag identification.

Maximum operating electromagnetic field, E_{max}, measurement procedure:

1) The waveform generator shall be set to the required operating frequency of 866 MHz.

2) The waveform generator amplitude shall be set to the value of identification electromagnetic field threshold ($E_{THR\ Identification}$).

3) The tag shall be inserted in the test equipment.

© ISO/IEC 2007 – All rights reserved
Copyright International Organization for Standardization
Provided by IHS under license with ISO
No reproduction or networking permitted without license from IHS
Not for Resale

4) The tag shall be left under the magnetic field strength during 30 seconds.

5) A command shall be continuously sent with the code generator and the amplitude shall be increased after each command until the complete UII can be measured.

6) The data transfer shall be verified by comparison with ISO/IEC 18000-6. In case the tag response is wrong, then step 4) shall be repeated with a higher amplitude.

7) The waveform amplitude shall be set to the value of identification electromagnetic field threshold ($E_{THR\ Identification}$), and the tag shall be left under this magnetic field strength for 5 seconds.

8) The electromagnetic field strength shall be increased.

9) The steps 4) to 8) shall be repeated until the tag can't return its response, then note the electromagnetic field strength E for the individual tag.

The measurements shall be performed on 10 tags. E_{max} shall be the lowest value of all measured electromagnetic field strength E for the individual tags.

The measurements shall be repeated for the three test frequencies 910 MHz, 922 MHz, 953 MHz and for each frequency peak.

8.5.3 Test report

The test report shall give the measured maximum operating electromagnetic field E_{max} for each frequency peak, the environmental conditions and communication parameters. All these parameters shall be recorded according to the example in Table 11.

Table 11 — Parameters that shall be recorded for this measurement

Test: Maximum operating electromagnetic field (E_{max})		
Mounting Material:		
Temperature:	Humidity:	
Tag Protocol:	Tag UII:	
Forward Link		
Modulation index: %	Data rate: kbps	Data coding:
Command: 0x		
Return Link		
Data rate: kbps	Data coding:	
Test Results		
Frequency	**E_{max}**	
xxx MHz	**xx,xx V/m**	
...	**…**	

8.6 Survival electromagnetic field ($E_{Survival}$)

8.6.1 Purpose

The purpose of this test is to determine the maximum electromagnetic field ($E_{Survival}$) value at which the tag stops operating when exposed to this high value, even if the operating electromagnetic field is reduced to a value in the range between $E_{THR\ Identification}$ and E_{max}.

8.6.2 Test procedure

For each tag frequency peak and for the four test frequencies defined in ISO/IEC TR 18047-6 (866 MHz; 910 MHz; 922 MHz; 953 MHz), the electromagnetic field of the generating field has to be increased from identification electromagnetic field threshold ($E_{THR\ Identification}$) until the tag destruction. The survival electromagnetic field ($E_{Survival}$) is the maximum electromagnetic field before tag destruction.

--`,,```,,,,````-`-`,,`,,`,`,,`---

© ISO/IEC 2007 – All rights reserved

Copyright International Organization for Standardization
Provided by IHS under license with ISO
No reproduction or networking permitted without license from IHS
Not for Resale

Survival operating electromagnetic field, $E_{Survival}$, measurement procedure:

1) The waveform generator shall be set to the required operating frequency of 866 MHz.

2) The waveform generator amplitude shall be set to the value of identification electromagnetic field threshold ($E_{THR\ Identification}$).

3) The tag shall be inserted in the test equipment.

4) The tag shall be left under the electromagnetic field strength during 30 seconds.

5) The waveform amplitude shall be set to the value of identification electromagnetic field threshold ($E_{THR\ Identification}$).

6) A command shall be continuously sent with the code generator and the amplitude shall be increased after each command until the complete UII can be measured.

7) The data transfer shall be verified by comparison with ISO/IEC 18000-6. In case the tag response is wrong, then step 4) shall be repeated with a higher amplitude.

8) The tag shall be left under this electromagnetic field for 5 seconds.

9) The electromagnetic field strength shall be increased.

10) The steps 4) to 9) shall be repeated until the tag can't return its response, then note the electromagnetic field strength E for the individual tag, record the previous value.

The measurements shall be performed on 10 tags. $E_{survival}$ shall be the lowest value of all measured electromagnetic field strength E for the individual tags.

The measurements shall be repeated for the three test frequencies 910 MHz, 922 MHz, 953 MHz and for each frequency peak.

8.6.3 Test report

The test report shall give the measured maximum operating electromagnetic field $E_{Survival}$ for each frequency peak and for the four test frequencies defined in ISO/IEC TR 18047-6 (866 MHz; 910 MHz; 922 MHz; 953 MHz), the environmental conditions and communication parameters. All parameters shall be recorded according to the example in Table 12.

Table 12 — Parameters that shall be recorded for this measurement

Test: Survival electromagnetic field ($E_{Survival}$)		
Mounting Material:		
Temperature:	Humidity:	
Tag Protocol:	Tag UII:	
Forward Link		
Modulation index:%	Data rate: kbps	Data coding:
Command:0x		
Return Link		
Data rate: kbps	Data coding:	
Test Results		
Frequency	**$E_{survival}$**	
xxx MHz	**xx,xx V/m**	
...	**…**	

© ISO/IEC 2007 – All rights reserved
Copyright International Organization for Standardization
Provided by IHS under license with ISO
No reproduction or networking permitted without license from IHS
Not for Resale

8.7 Delta radar cross section (ΔRCS)

8.7.1 Purpose

The purpose of this test is to determine the delta radar cross section and the angle information during the tag backscattering for different electromagnetic field strength. The angle information, $\Delta\varphi$, is the phase difference between a tag modulated state and an un-modulated state.

8.7.2 Test procedure

For each tag frequency peak and for the four test frequencies defined in ISO/IEC TR 18047-6 (866 MHz; 910 MHz; 922 MHz; 953 MHz), the electromagnetic field of the generating field has to be increased from identification electromagnetic field threshold ($E_{THR\ Identification}$) to the maximum operating electromagnetic field (E_{MAX}) with a regular step such that there is a minimum of 10 points of delta radar cross section and angle information, $\Delta\varphi$, measurements. The delta radar cross section and the angle information shall be calculated according to the ISO/IEC TR 18047-6 conformance measurement.

Delta radar cross section, ΔRCS, and angle information, $\Delta\varphi$, measurement procedure:

1) The waveform generator shall be set to the required operating frequency of 866 MHz.

2) The waveform generator amplitude shall be set to the value of identification electromagnetic field threshold ($E_{THR\ Identification}$).

3) The tag shall be inserted in the test equipment.

4) A command shall be continuously sent with the code.

5) The delta radar cross section and angle information shall be measured according to the ISO/IEC TR 18047-6 procedure.

6) The electromagnetic field strength E shall be increased until maximum operating electromagnetic field (E_{MAX}) and the measurements of delta radar cross section and angle information shall be performed for each electromagnetic field strength step.

7) The steps 1) to 6) shall be repeated for the three test frequencies 910 MHz, 922 MHz, 953 MHz and for each frequency peak.

The measurements shall be performed on 10 tags. The ΔRCS value and angle information, $\Delta\varphi$, shall be the lowest value of all individual tags measurements.

8.7.3 Test report

The test report shall give the ΔRCS curve and the angle information curve versus electromagnetic field from identification electromagnetic field threshold ($E_{THR\ Identification}$) to the maximum operating electromagnetic field (E_{MAX}), the environment conditions and communication parameters. These parameters shall be recorded according to the example in Table 13.

© ISO/IEC 2007 – All rights reserved

Copyright International Organization for Standardization
Provided by IHS under license with ISO
No reproduction or networking permitted without license from IHS
Not for Resale

Table 13 — Parameters that shall be recorded for this measurement

<table>
<tr><td colspan="3">Test: Delta radar cross section (ΔRCS) & angle information</td></tr>
<tr><td colspan="3">Mounting Material:</td></tr>
<tr><td>Temperature:</td><td colspan="2">Humidity:</td></tr>
<tr><td>Tag Protocol:</td><td colspan="2">Tag UII:</td></tr>
<tr><td colspan="3">Forward Link</td></tr>
<tr><td>Modulation index: %</td><td>Data rate: kbps</td><td>Data coding:</td></tr>
<tr><td colspan="3">Command: 0x</td></tr>
<tr><td colspan="3">Return Link</td></tr>
<tr><td>Data rate: kbps</td><td colspan="2">Data coding:</td></tr>
<tr><td colspan="3">Test Results</td></tr>
<tr><td colspan="3">Frequency : xx MHz</td></tr>
<tr><td colspan="2">ΔRCS vs E
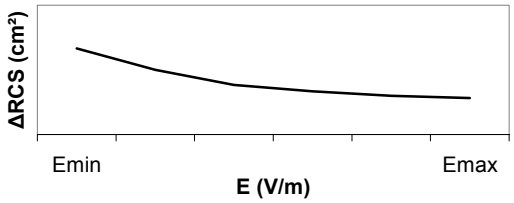
</td><td>Δφ vs E
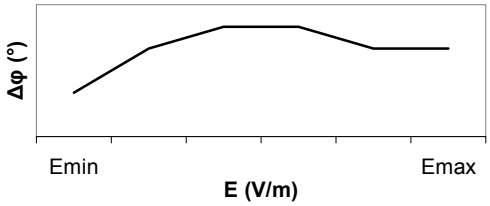
</td></tr>
</table>

8.8 Interference rejection ($I_{Rejection}$)

8.8.1 Purpose

The purpose of this test is to determine the interference rejection ability of the tag.

8.8.2 Test procedure

For each tag frequency peak and for the four test frequencies defined in ISO/IEC TR 18047-6 (866 MHz; 910 MHz; 922 MHz; 953 MHz), the interferer electromagnetic field has to be increased relative to the desired electromagnetic field until the tag can no longer demodulate the desired generator command. For this test, the test set-up described in sub clause 6.3.1 is used.

8.8.2.1 Continuous wave (CW) interference rejection:

1) The desired generator shall be set to the required operating frequency of 866 MHz.
2) The desired generator waveform amplitude shall be set to the value of identification electromagnetic field threshold ($E_{THR\ Identification}$).
3) The interferer generator shall be set to the operating frequency of 866 MHz +/-0 Hz frequency offset.
4) The interferer generator amplitude shall be set to a value below identification magnetic field threshold, which is typically zero.
5) The tag shall be inserted in the test equipment.
6) The interferer generator amplitude shall emit a CW signal at increasing amplitude until the tag can no longer demodulate the desired generator command.
7) The interferer electromagnetic field strength E shall be calculated by use of the interferer generator amplitude.
8) The steps 3) to 7) shall be repeated for the interferer frequency offsets +/- 200, +/- 400, +/- 600, +/- 800 and +/- 1000 kHz.
9) The steps 1) to 8) shall be repeated for the three test frequencies 910 MHz, 922 MHz, 953 MHz and for each frequency peak.

--`,,```,,,,````-`-`,,`,,`,`,,`---
© ISO/IEC 2007 – All rights reserved
Copyright International Organization for Standardization
Provided by IHS under license with ISO
No reproduction or networking permitted without license from IHS
Not for Resale

8.8.2.2 Modulated interference rejection:

1) The desired generator shall be set to the required operating frequency of 866 MHz.

2) The desired generator waveform amplitude shall be set to the value of identification electromagnetic field threshold ($E_{THR\ Identification}$).

3) The interferer generator shall be set to the operating frequency of 866 MHz +/-0 Hz frequency offset.

4) The interferer generator amplitude shall be set to a value below identification magnetic field threshold, which is typically zero.

5) The tag shall be inserted in the test equipment.

6) The interferer generator amplitude shall send an appropriate command at increasing amplitude until the tag can no longer demodulate the desired generator command.

7) The interferer electromagnetic field strength E shall be calculated by use of the interferer generator amplitude.

8) The steps 3) to 7) shall be repeated for the interferer frequency offset +/- 200, +/- 400, +/- 600, +/- 800 and +/-1000 kHz.

9) The steps 1) to 8) shall be repeated for the three test frequencies 910 MHz, 922 MHz, 953 MHz and for each frequency peak.

The measurements shall be performed on all tags. The interferer electromagnetic field strength value shall be the lowest value of all measured interferer electromagnetic field strength E for the individual tags.

8.8.3 Test report

The test report shall give the interferer electromagnetic field strength for each frequency offset for each frequency peak and for the four test frequencies defined in ISO/IEC TR 18047-6 (866 MHz; 910 MHz; 922 MHz; 953 MHz), plus the environment conditions and communication parameters. All these parameters shall be recorded according to the example in Table 14.

Table 14 — Parameters that shall be recorded for this measurement

Test: Interference rejection ($I_{REJECTION}$)											
Mounting Material:											
Temperature:	Humidity:										
Tag Protocol:	Tag UII:										
Forward Link											
Modulation index: %	Data rate: kbps					Data coding:					
Command: 0x											
Return Link											
Data rate: kbps	Data coding:										
Test Results											
Interferer frequency Offset (kHz)	**0**	**-200**	**+200**	**-400**	**+400**	**-600**	**+600**	**-800**	**+800**	**-1000**	**+1000**
Frequency: xxx MHz											
CW interference rejection											
Modulated interference rejection											

© ISO/IEC 2007 – All rights reserved

Copyright International Organization for Standardization
Provided by IHS under license with ISO
No reproduction or networking permitted without license from IHS
Not for Resale

8.9 Maximum identification fade rate ($E_{Fade\ Identification}$)

8.9.1 Purpose

The purpose of this test is to determine the maximum electromagnetic-field fade rate that a tag can tolerate during identification.

8.9.2 Test procedure

For each tag frequency peak and for the four test frequencies defined in ISO/IEC TR 18047-6 (866 MHz; 910 MHz; 922 MHz; 953 MHz), modulate the electromagnetic field strength (i.e. amplitude modulate the field envelope) at each frequency step, with an increasing triangle wave modulation rate, until the tag stops responding (see Figure 4).

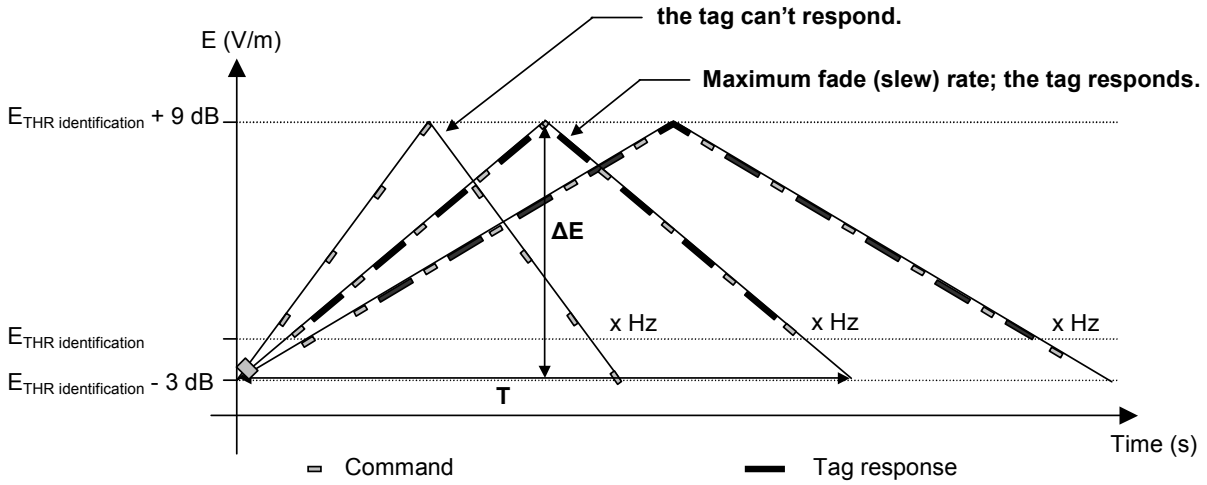

$$\text{Fade rate (V/m.s)} = \frac{\Delta E}{T/2} = 2.\Delta E.F$$

With : ΔE : Electomagnetic field variation in V/m
T : Period Time in seconds
F : Frequency in Hz

Figure 4 — Fade rate measurement

Identification fade-rate measurement procedure:

1) The waveform generator shall be set to the required operating frequency of 866 MHz.

2) The waveform generator amplitude shall be set to be 3 dB above the tag's minimum electromagnetic field identification threshold and the maximum waveform generator amplitude shall be set to 9 dB above the tag's minimum electromagnetic field identification threshold.

3) The tag shall be inserted in the test equipment.

4) The waveform generator shall be set to send an appropriate command, so that the tag repeatedly returns its UII. The data transfer shall be verified by comparison with ISO/IEC 18000-6. The amplitude envelope shall be modulated, as described in step (2), using triangle-wave modulation, from 0 Hz to the frequency at which the tag stops responding. The triangle-wave modulation frequency shall be recorded.

© ISO/IEC 2007 – All rights reserved
Copyright International Organization for Standardization
Provided by IHS under license with ISO
No reproduction or networking permitted without license from IHS
Not for Resale

5) The electromagnetic field fade (slew) rate E shall be calculated by use of triangle-wave envelope's frequency.

6) The steps 4) to 5) shall be repeated for the three test frequencies 910 MHz, 922 MHz, 953 MHz and for each frequency peak.

The measurements shall be performed on all tags. $E_{Fade\ Identification}$ value shall be the lowest value of all measured electromagnetic field fade rate E for the individual tags.

8.9.3 Test report

The test report shall give for each frequency peak and for the four test frequencies defined in ISO/IEC TR 18047-6 (866 MHz; 910 MHz; 922 MHz; 953 MHz), the $E_{Fade\ Identification}$ versus frequency, the environmental conditions, and communication parameters. All these parameters shall be recorded according to the example in Table 15.

Table 15 — Parameters that shall be recorded for this measurement

Test: Maximum identification fade rate ($E_{Fade\ Identification}$)		
Mounting Material:		
Temperature:	Humidity:	
Tag Protocol:	Tag UII:	
Forward Link		
Modulation index: %	Data rate: kbps	Data coding:
Command: 0x		
Return Link		
Data rate: kbps	Data coding:	
Test Results		
Frequency	**Triangle wave modulation frequency**	**$E_{Fade\ Identification}$**
xxx MHz	**xx Hz**	**xx,xx V/ m.s**
...	**...**	**...**

8.10 Maximum write fade rate ($E_{Fade\ Write}$)

8.10.1 Purpose

The purpose of this test is to determine the maximum electromagnetic-field fade rate that a tag can tolerate during writing.

8.10.2 Test procedure

For each tag frequency peak and for the four test frequencies defined in ISO/IEC TR 18047-6 (866 MHz; 910 MHz; 922 MHz; 953 MHz), modulate the electromagnetic field strength (i.e. amplitude modulate the field envelope) at each frequency step, with an increasing triangle wave modulation rate, until the tag stops writing (see Figure 4).

Write fade-rate measurement procedure:

1) The waveform generator shall be set to the required operating frequency of 866 MHz.

2) The waveform generator amplitude shall be set to be 3 dB above the tag's minimum electromagnetic field identification threshold and the maximum waveform generator amplitude shall be set to 9 dB above the tag's minimum electromagnetic field identification threshold.

3) The tag shall be inserted in the test equipment.

© ISO/IEC 2007 – All rights reserved

Copyright International Organization for Standardization
Provided by IHS under license with ISO
No reproduction or networking permitted without license from IHS
Not for Resale

4) The waveform generator shall be set to send an appropriate command, so the tag repeatedly writes its memory and returns a valid indicator that the writing was successful. The data transfer shall be verified by comparison with ISO/IEC 18000-6. Modulate the command amplitude envelope, as described in step (2), using triangle-wave modulation, from 0 Hz to the frequency at which the tag stops writing correctly. The triangle-wave modulation frequency shall be recorded.

5) The electromagnetic field fade (slew) rate E shall be calculated by use of triangle-wave envelope's frequency.

6) The steps 4) to 5) shall be repeated for the three test frequencies 910 MHz, 922 MHz, 953 MHz and for each frequency peak.

The measurements shall be performed on all tags. $E_{Fade\ Write}$ value shall be the lowest value of all measured electromagnetic field fade rate E for the individual tags.

8.10.3 Test report

The test report shall give for each frequency peak and for the four test frequencies defined in ISO/IEC TR 18047-6 (866 MHz; 910 MHz; 922 MHz; 953 MHz), the $E_{Fade\ Write}$ versus frequency, the environmental conditions, and communication parameters. All these parameters shall be recorded according to the example in Table 16.

Table 16 — Parameters that shall be recorded for this measurement

Test: Maximum identification fade rate ($E_{Fade\ Write}$)		
Mounting Material:		
Temperature:	Humidity:	
Tag Protocol:	Tag UII:	
Forward Link		
Modulation index: %	Data rate: kbps	Data coding:
Command: 0x		
Return Link		
Data rate: kbps	Data coding:	
Data Block size: bytes	Data wrote : 0x	
Test Results		
Frequency	**Triangle wave modulation frequency**	**$E_{Fade\ Write}$**
xxx MHz	**xx Hz**	**xx,xx V/ m.s**
...	**...**	**...**

9 Functional tests for 433,920 MHz propagative tags as defined in ISO/IEC 18000-7

9.1 Identification electromagnetic field threshold ($E_{THR\ Identification}$) and frequency tolerance

9.1.1 Purpose

This test determines the electromagnetic field threshold level required for tag identification when using an ISO/IEC 18000-7 reader functioning in Master-Slave mode (Interrogator Talks First or ITF).

The identification electromagnetic field threshold, $E_{THR\ Identification}$, is the minimum electromagnetic field that allows a tag to be identified.

© ISO/IEC 2007 – All rights reserved
Copyright International Organization for Standardization
Provided by IHS under license with ISO
No reproduction or networking permitted without license from IHS
Not for Resale

9.1.2 Test procedure

The specification for ISO/IEC 18000-7 tags and readers specifies an operating frequency of 433,920 MHz (±20ppm), which is approximately ±8,7 kHz. Since both the reader and the tag may be shifted by 20ppm, and potentially in opposite directions, the system shall function within ±40ppm (approximately 17,4 kHz) of the nominal centre frequency. For convenience in setting up the signal generator, use a centre frequency low of 433,900 MHz, nominal of 433,920 MHz, and a high of 433,940 MHz for the following tests.

Identification electromagnetic field threshold, $E_{THR\ identification}$, measurement procedure:

1) Set up all test equipment in an anechoic chamber or some other fully characterized and controlled location free from interference sources and propagation influences, such as significant signal reflections, absorptions, or blockages.

   Tests should be run using a known reference antenna attached to the signal source and receiver.

   Recommended test distance between the tag's location and the reference antenna should be 2 m, minimum, with 3 m preferred.

2) Set a signal source to transmit FSK with a 433,920 MHz centre frequency, using FSK modulation at ±50 kHz with waveforms and timings as specified in ISO/IEC 18000-7. The signal source's output level shall be adjustable over a 100 dB range in 10 dB steps, with at least 10 dBm available as the maximum output.

   As a modulator for this signal source, use a code generator certified to properly generate relevant command sequences and timing.

   The generator should be set up so that the following conditions exist when modulated:
   Symbol LOW = fc +50 kHz (433,970 when centred at 433,920 MHz)
   Symbol HIGH = fc -50 kHz (433,870 MHz when centred at 433,920 MHz)

3) Use an FSK receiver and decoder to receive, decode, and send tag responses to appropriate monitoring software so tag responses can be evaluated. Synchronize the decoder with the code generator so all protocol timing can be maintained within correct relationships.

4) Mount the tag being evaluated on a minimum 20 ×20 inch metal sheet reflector for this test, attached in the mounting configuration specified for the specific tag model being evaluated. Orient the tag so its main response is facing the source signal.

5) Alternatively, depending on expected tag usage, the tag can be placed on a non-metallic mounting plate or pole, or attached in the mounting configuration specified for the tag model being evaluated.

6) Adjust the signal source for minimum output, then send a Wakeup Header command followed immediately by a Collect command as defined in ISO/IEC 18000-7. Adjust the signal source until the tag under test responds reliably.

7) Record data for the tag when mounted vertically, then when horizontally polarized.

8) Repeat steps 6) and 7) after increasing the centre frequency to 433,940 MHz.

9) Repeat steps 6) and 7) after decreasing the centre frequency to 433,900 MHz.

10) Perform the measurements in steps 6) and 7) on all tags. The $E_{THR\ Identification}$ value is the greatest electromagnetic field strength noted out of all measurements.

NOTE If one tag is clearly lower in sensitivity than all others—requires more signal before it will respond—it should be removed from the tests and replaced with another tag.

© ISO/IEC 2007 – All rights reserved

Copyright International Organization for Standardization
Provided by IHS under license with ISO
No reproduction or networking permitted without license from IHS
Not for Resale

9.1.3 Test report

The test report provides data recorded for the system's lower, nominal, and upper tolerance limits. The environmental conditions and communication parameters shall be recorded according to the example in Table 17.

Table 17 — Parameters recorded for $E_{THR\ Identification}$ measurement

Test: Identification electromagnetic field threshold ($E_{THR\ Identification}$) at centre frequency and +/-40ppm)		
Mounting Material:		
Temperature:	Humidity:	
Tag Protocol:	Tag UII:	
Forward Link		
Deviation (kHz):	Data Rate: kbps	Data Coding:
Command: Wakeup followed by Collect command		
Return Link		
Data Rate: kbps	Data Coding:	
Test Results		
Centre Frequency	**fc – 40ppm**	**fc +40ppm**
xxx MHz	**xxx MHz**	**xxx MHz**
$E_{THR\ Identification}$: xx,xx dBuV/m	**$E_{THR\ Identification}$: xx,xx dBuV/m**	**$E_{THR\ Identification}$: xx,xx dBuV/m**
ID:	**ID:**	**ID:**

9.2 Reading electromagnetic field threshold ($E_{THR\ Read}$) and frequency tolerance

9.2.1 Purpose

This test determines the electromagnetic field threshold level that allows a tag reading. To successfully read tag data, transmit the command correctly, with enough energy available to read the tag. The reading electromagnetic field threshold, $E_{THR\ Read}$, is the minimum electromagnetic field that allows tag reading.

9.2.2 Test procedure

Run the tests at 433,920 MHz, nominal, then at 433,900 MHz (-40ppm) and 433,940 MHz (+40ppm). Set the signal source's electromagnetic field below the level that allows a tag to respond to a command, then increase the field to a level where it is possible to read the tag's ID and memory contents.

For this test, use user memory or, if this is not available, any other memory that is not the UII memory.

The specification for ISO/IEC 18000-7 tags and readers specifies an operating frequency of 433,920 MHz (±20ppm), which is approximately ±8,7 kHz. Since both the reader and the tag may be shifted by 20ppm and potentially in opposite directions, the system shall function within ±40ppm (approximately 17,4 kHz) of the nominal centre frequency.

For convenience in setting up the signal source, use a low frequency of 433,900 MHz, nominal centre frequency of 433,920 MHz, and a high frequency of 433,940 MHz for the following tests.

Reading electromagnetic field threshold, $E_{THR\ Read}$, measurement procedure:

1) Set up all test equipment in an anechoic chamber or some other fully characterized and controlled location free from interference sources and propagation influences, such as significant signal reflections, absorptions, or blockages.

   Tests should be run using a known reference antenna attached to the signal source and receiver.

   Recommended test distance between the tag's location and the reference antenna should be 2 m, minimum, with 3 m preferred.

© ISO/IEC 2007 – All rights reserved
Copyright International Organization for Standardization
Provided by IHS under license with ISO
No reproduction or networking permitted without license from IHS
Not for Resale

2) Set a signal source to transmit FSK with a 433,920 MHz centre frequency, using FSK modulation at ±50 kHz with waveforms and timings as specified in ISO/IEC 18000-7. The signal source's output level shall be adjustable over a 100 dB range in 10 dB steps, with at least 10 dBm available as the maximum output.

   Use a code generator certified to properly generate relevant command sequences and timing as a modulator for this signal source.

   The generator should be set up so the following conditions exist when modulated:

   Symbol LOW = fc +50 kHz (433,970 MHz when centred at 433,920 MHz)
   Symbol HIGH = fc -50 kHz (433,870 MHz when centred at 433,920 MHz)

3) Use an FSK receiver and decoder to receive, decode, and send tag responses to appropriate monitoring software so tag responses can be evaluated. Synchronize the decoder with the code generator so all protocol timing can be maintained within correct relationships.

4) Mount the tag being evaluated on a minimum 20 × 20 inch metal sheet reflector for this test, attached in the mounting configuration specified for the specific tag model being evaluated. Orient the tag so its main response is facing the source signal.

5) Alternatively, depending on expected tag usage, the tag can be placed on a non-metallic mounting plate or pole, or attached in the mounting configuration specified for the tag model being evaluated.

6) Adjust the signal source for minimum output, then send a Wakeup Header command followed immediately by a Collect With Data command as defined in ISO/IEC 18000-7. Adjust the signal source until the tag under test responds reliably.

7) Record the data for the tag when mounted vertically, then when horizontally polarized.

8) Repeat steps 6) and 7) after increasing the centre frequency to 433,940 MHz.

9) Repeat steps 6) and 7) after decreasing the centre frequency to 433,900 MHz.

10) Measure all tags. The $E_{THR\ Read}$ value is the greatest electromagnetic field strength noted out of all measurements.

NOTE If one tag is clearly lower in sensitivity than all others—requires more signal before it will respond—it should be removed from the tests and replaced with another tag.

9.2.3 Test report

The test report provides data recorded for the system's lower, nominal, and upper tolerance limits. Record the environmental conditions and communication parameters according to the example in Table 18.

Table 18 — Parameters recorded for $E_{THR\ Read}$ measurement

Test: Reading electromagnetic field threshold ($E_{THR\ Read}$) at centre frequency and ±40ppm)		
Mounting Material:		
Temperature:	Humidity:	
Tag Protocol:	Tag UII:	
Forward Link		
Deviation (kHz):	Data Rate: kbps	Data Coding:
Command: Wakeup followed by Collect With Data command		
Return Link		
Data Rate: kbps	Data Coding:	
Test Results		
Centre Frequency	**fc – 40ppm**	**fc +40ppm**
xxx MHz	**xxx MHz**	**xxx MHz**
$E_{THR\ Read}$: xx,xx dBuV/m	**$E_{THR\ Read}$: xx,xx dBuV/m**	**$E_{THR\ Read}$: xx,xx dBuV/m**
ID & Data:	**ID & Data**:	**ID & Data:**

--`,,```,,,,````-`-`,,`,,`,`,,`---

© ISO/IEC 2007 – All rights reserved

Copyright International Organization for Standardization
Provided by IHS under license with ISO
No reproduction or networking permitted without license from IHS
Not for Resale

9.3 Writing electromagnetic field threshold (ETHR Write)

9.3.1 Purpose

This test determines the electromagnetic field threshold level that allows a tag write operation. To successfully write data into the tag, transmit the data correctly, with enough energy available during the memory access. The writing electromagnetic field threshold ($E_{THR\ Write}$) is the minimum electromagnetic field allowing a tag write operation.

9.3.2 Test procedure

Run tests at 433,920 MHz, nominal, and at 433,900 MHz (-40ppm) and 433,940 MHz (+40ppm). Set the signal source's electromagnetic field below the level that allows a tag to respond to a command to a level where it is possible to write the tag's memory.

For this test, use user memory or, if this is not available, any other memory that is not the UII memory.

Writing electromagnetic field threshold, $E_{THR\ Write}$, measurement procedure:

1) Set up all test equipment in an anechoic chamber or some other fully characterized and controlled location free from interference sources and propagation influences, such as significant signal reflections, absorptions, or blockages.

   Tests should be run using a known reference antenna attached to the signal source and receiver.

   Recommended test distance between the tag's location and the reference antenna should be 2 m, minimum, with 3 m preferred.

2) Set a signal source to transmit FSK with a 433,920 MHz centre frequency, using FSK modulation at ±50 kHz with waveforms and timings as specified in ISO/IEC 18000-7. The signal source's output level shall be adjustable over a 100 dB range in 10 dB steps, with at least 10 dBm available as the maximum output.

   As a modulator for this signal source, use a code generator certified to properly generate relevant command sequences and timing.

   The generator should be set up so the following conditions exist when modulated:

   Symbol LOW = fc +50 kHz (433,970 MHz when centred at 433,920 MHz)
   Symbol HIGH = fc -50 kHz (433,870 MHz when centred at 433,920 MHz)

3) Use an FSK receiver and decoder to receive, decode, and send tag responses to appropriate monitoring software so tag responses can be evaluated. Synchronize the decoder with the code generator so all protocol timing can be maintained within correct relationships.

4) Mount the tag being evaluated on a minimum 20 × 20 inch metal sheet reflector for this test, attached in the mounting configuration specified for the specific tag model being evaluated. Orient the tag so its main response is facing the source signal.

5) Alternatively, depending on expected tag usage, the tag can be placed on a non-metallic mounting plate or pole, or attached in the mounting configuration specified for the tag model being evaluated.

6) Adjust the signal source for minimum output, then send a Wakeup Header command followed immediately by a Write command as defined in ISO/IEC 18000-7. Adjust the signal source until the tag under test responds reliably.

7) Record the data for the tag when mounted vertically, then when horizontally polarized.

8) Repeat steps 6) and 7) after increasing the centre frequency to 433,940 MHz.

© ISO/IEC 2007 – All rights reserved
Copyright International Organization for Standardization
Provided by IHS under license with ISO
No reproduction or networking permitted without license from IHS
Not for Resale

9) Repeat steps 6) and 7) after decreasing the centre frequency to 433,900 MHz.

10) Measure all tags. The $E_{THR\ Write}$ value is the greatest electromagnetic field strength noted out of all measurements.

NOTE If one tag is clearly lower in sensitivity than all others—requires more signal before it will respond—it should be removed from the tests and replaced with another tag.

9.3.3 Test report

The test report provides data recorded for the system's lower, nominal, and upper tolerance limits. Record the environmental conditions and communication parameters according to the example in Table 19.

Table 19 — Parameters recorded for $E_{THR\ Write}$ measurement

Test: Writing electromagnetic field threshold ($E_{THR\ Write}$) at centre frequency and ±40ppm)		
Mounting Material:		
Temperature:	Humidity:	
Tag Protocol:	Tag UII:	
Forward Link		
Deviation (kHz):	Data Rate: kbps	Data Coding:
Command: Wakeup followed by Write command		
Return Link		
Data Rate: kbps	Data Coding:	
Test Results		
Centre Frequency	**fc – 40ppm**	**fc +40ppm**
xxx MHz	**xxx MHz**	**xxx MHz**
$E_{THR\ Write}$ xx,xx dBuV/m	**$E_{THR\ Write}$ xx,xx dBuV/m**	**$E_{THR\ Write}$ xx,xx dBuV/m**

9.4 Sensitivity Directivity ($S_{Directivity}$)

9.4.1 Purpose

This test determines the tag's sensitivity to various orientations, such as azimuth and elevation (see Figure 5). This, of course, is a determination of the directivity of the tag. Determine the directivity under all conditions for which the tag is designed. This may include the tag being mounted on a metal surface (a reflector of 20 × 20 inches being representative) or on a non-metallic object, such as a cardboard box or wooden post.

9.4.2 Test procedure

Run tests at 433,920 MHz, nominal. Set the signal source's electromagnetic field below the level that allows a tag to respond to a Wakeup/Collect command, then raise the field to a level where the tag responds reliably to a Wakeup/Collect command.

Rotate the tag in 15-degree increments. Record the level that is then required for a reliable Wakeup/Collect command to get reliable responses from the tag at 0, 15, 30, 45, 60, 75, 90, 105, 120, 135, 150, 165, 180, 195, 210, 225, 240, 255, 270, 285, 300, 315, 330, and 345 degrees. However, if the tag is mounted on a metal plate, only 0–90 and 315–345 degree levels need to be taken.

--`,,```,,,,````-`-`,,`,,`,`,,`---

© ISO/IEC 2007 – All rights reserved
Copyright International Organization for Standardization
Provided by IHS under license with ISO
No reproduction or networking permitted without license from IHS
Not for Resale

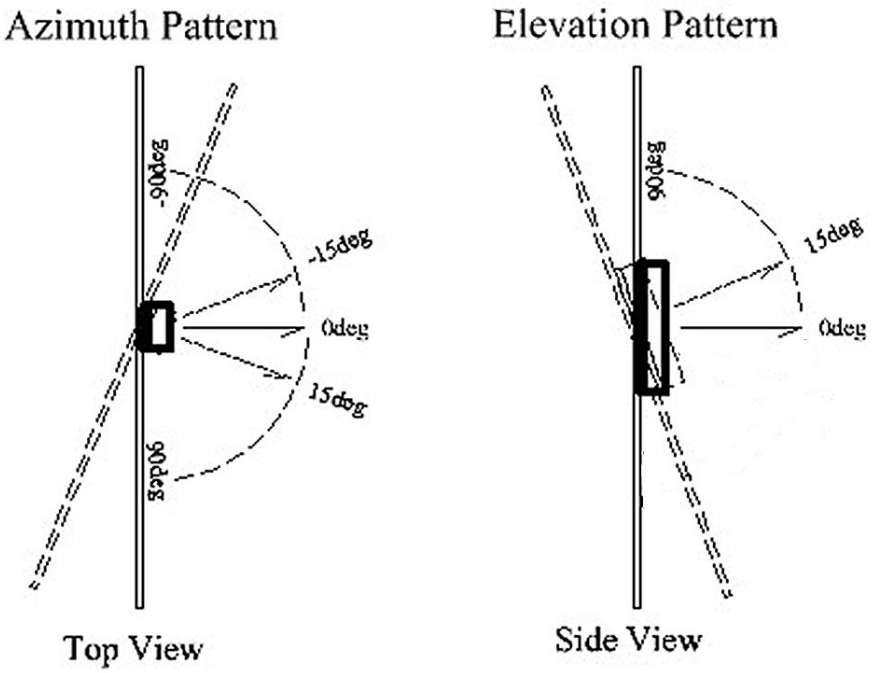

Figure 5 — Azimuth and elevation pattern

Sensitivity Directivity, $S_{Directivity}$, measurement procedure:

1) Set up all test equipment in an anechoic chamber or some other fully characterized and controlled location free from interference sources and propagation influences, such as significant signal reflections, absorptions, or blockages. This is particularly important when measuring tag patterns since any reflections will distort the pattern measurement.

   Tests should be run using a known reference antenna attached to the signal source and receiver.

   Recommended test distance between the tag's location and the reference antenna should be 2 m, minimum, with 3 m preferred.

2) Set a signal source to transmit FSK with a 433,920 MHz centre frequency, using FSK modulation at ±50 kHz with waveforms and timings as specified in ISO/IEC 18000-7. The signal source's output level shall be adjustable over a 100 dB range in 10 dB steps, with at least 10 dBm available as the maximum output.

   Use a code generator certified to properly generate relevant command sequences and timing as a modulator for this signal source.

   The generator should be set up so the following conditions exist when modulated:

   Symbol LOW = fc +50 kHz (433,970 MHz when centred at 433,920 MHz)
   Symbol HIGH = fc -50 kHz (433,870 MHz when centred at 433,920 MHz)

3) Use an FSK receiver and decoder to receive, decode, and send tag responses to appropriate monitoring software so tag responses can be evaluated. Synchronize the decoder with the code generator so all protocol timing can be maintained within correct relationships.

4) Mount the tag being evaluated on a minimum 20 × 20 inch metal sheet reflector for this test, attached in the mounting configuration specified for the specific tag model being evaluated. Orient the tag so its main response is facing the source signal. If mounted on a metal sheet, only ±90 degrees from zero reference between tag and reader needs to be evaluated.

© ISO/IEC 2007 – All rights reserved
Copyright International Organization for Standardization
Provided by IHS under license with ISO
No reproduction or networking permitted without license from IHS
Not for Resale

5) Alternatively, depending on expected tag usage, the tag can be placed on a non-metallic mounting plate or pole, or attached in the mounting configuration specified for the tag model being evaluated. If used in this manner, take a full 360-degree pattern.

6) Adjust the signal source for minimum output, then send a Wakeup Header command followed immediately by a Collect command as defined in ISO/IEC 18000-7. Adjust the signal source until the tag under test responds reliably.

7) Record the data for the tag when mounted vertically, then when horizontally polarized.

8) Repeat steps 6) and 7), rotating the azimuth by 15 degrees until data has been taken for 0, 15, 30, 45, 60, 75, 90, 105, 120, 135, 150, 165, 180, 195, 210, 225, 240, 255, 270, 285, 300, 315, 330, and 345 degrees, while elevation remains at 0 degrees.

NOTE A metal mounting plate has been used to mount the tag, measurements can be restricted to 0–90 then 270-345 degrees, since radiation between 105-255 degrees will be blocked by the metal mounting surface.

9) Repeat steps 6) and 7), rotating the elevation by 15 degrees until data has been taken for 0, 15, 30, 45, 60, 75, 90, while azimuth remains at 0 degrees.

10) Measure all tags. The $S_{Directivity}$ value is the greatest electromagnetic field strength noted out of all measurements.

9.4.3 Test report

The test report gives for each angle the $S_{Directivity}$ values and curves (E versus azimuth and E versus elevation), plus all environmental conditions and communication parameters. Record all these parameters according to the example in Table 20.

Table 20 — Parameters recorded for $S_{Directivity}$ measurement

Test: Sensitivity directivity ($S_{Directivity}$)						
Mounting Material:						
Temperature:		Humidity:				
Tag Protocol:		Tag UII:				
Forward Link						
Modulation Index: %		Data Rate: kbps	Data Coding:			
Command: 0x						
Return Link						
Data Rate: kbps		Data Coding:				
Test Results						
$E_{(dBuV/m)}$ vs. Azimuth	**-15°:**	**-30°:**	**-45°:**	**-60°:**	**-75°:**	**-90°:**
$E_{(dBuV/m)}$ vs. Azimuth	**15°:**	**30°:**	**45°:**	**60°:**	**75°:**	**90°:**
$E_{(dBuV/m)}$ vs. Elevation	**15°:**	**30°:**	**45°:**	**60°:**	**75°:**	**90°:**
$S_{Directivity}$ versus Azimuth curve:			**$S_{Directivityy}$ versus Elevation curve:**			

© ISO/IEC 2007 – All rights reserved

Copyright International Organization for Standardization
Provided by IHS under license with ISO
No reproduction or networking permitted without license from IHS
Not for Resale

9.5 Interference rejection ($I_{Rejection}$)

9.5.1 Purpose

This test determines the interference rejection ability of the tag.

9.5.2 Test procedure

A tag is placed in the test setup, and the signal source's level is set to 3 dB above $E_{THR\ Read}$ so that the tag is responding to all Wake Up plus Collect commands with its ID.

A second, unmodulated signal source at 433,920 MHz is set to a level 20 dB below the $E_{THR\ Read}$ level, then the level is increased until the tag no longer responds to the Wake Up plus Collect commands. This is considered the tag's On Channel $I_{Rejection}$ level. This is repeated for the 1st adjacent channel (±250 kHz) and 2nd adjacent channel (±500 kHz).

9.5.2.1 Unmodulated interference rejection:

1) Set up all test equipment in an anechoic chamber or some other fully characterized and controlled location free from interference sources and propagation influences, such as significant signal reflections, absorptions, or blockages.

   Tests should be run using two identical reference antennas attached to two signal sources, with one antenna also connected to a receiver.

   Recommended test distance between the tag's location and the source antennas should be 2 m, minimum, with 3 m preferred. The two antennas should be equal in gain and separated from each other by at least one wavelength to reduce interactions between them.

2) Set a signal source to transmit FSK with a 433,920 MHz centre frequency, using FSK modulation at ±50 kHz with waveforms and timings as specified in ISO/IEC 18000-7. The signal source's output level shall be adjustable to the $E_{THR\ Read}$ level plus 3 dB.

   Use a code generator certified to properly generate relevant command sequences and timing as a modulator for this signal source.

   The generator should be set up so the following conditions exist when modulated:

   Symbol LOW = fc +50 kHz (433,970 MHz when centred at 433,920 MHz)
   Symbol HIGH = fc -50 kHz (433,870 MHz when centred at 433,920 MHz)

3) Use an FSK receiver and decoder to receive, decode, and send tag responses to appropriate monitoring software so tag responses can be evaluated. Synchronize the decoder with the code generator so all protocol timing can be maintained within correct relationships.

4) Mount the tag being evaluated on a minimum 20 × 20 inch metal sheet reflector for this test, attached in the mounting configuration specified for the specific tag model being evaluated. Orient the tag so its main response is facing the source signal.

5) Alternatively, depending on expected tag usage, the tag can be placed on a non-metallic mounting plate or pole, or attached in the mounting configuration specified for the tag model being evaluated.

6) Adjust the signal source for minimum output, then send a Wakeup Header command followed immediately by a Collect command as defined in ISO/IEC 18000-7. Adjust the signal source until the tag under test responds reliably ($E_{THR\ Read}$), then increase the signal by 3 dB.

7) Adjust the second unmodulated signal source to 433,920 MHz. Set the level to 20 dB below the $E_{THR\ Read}$ level set in step 6.

© ISO/IEC 2007 – All rights reserved
Copyright International Organization for Standardization
Provided by IHS under license with ISO
No reproduction or networking permitted without license from IHS
Not for Resale

8) Adjust the second generator to the level at which the tag no longer responds to the Wake Up plus Collect commands from the 1st generator. This is considered the tag's Co-Channel $I_{Rejection}$ level. Record this value in Table 21 below.

9) Adjust the second unmodulated signal source to 433,920 MHz + 250 kHz (434,170 MHz). Set the level to 20 dB below the $E_{THR\ Read}$ level set in step 6.

10) Adjust the second generator to the level at which the tag no longer responds to the Wake Up plus Collect commands from the 1st generator. This is considered the tag's upper 1st Adjacent Channel $I_{Rejection}$ level. Record this value in Table 21 below.

11) Adjust the second unmodulated signal source to 433,920 MHz − 250 kHz (433,670 MHz). Set the level to 20 dB below the $E_{THR\ Read}$ level set in step 6.

12) Adjust the second generator to the level at which the tag no longer responds to the Wake Up plus Collect commands from the 1st generator. This is considered the tag's lower 1st Adjacent Channel $I_{Rejection}$ level. Record this value in Table 21 below.

13) Adjust the second unmodulated signal source to 433,920 MHz + 500 kHz (434,420 MHz). Set the level to 20 dB below the $E_{THR\ Read}$ level set in step 6.

14) Adjust the second generator to the level at which the tag no longer responds to the Wake Up plus Collect commands from the 1st generator. This is considered the tag's upper 2nd Adjacent Channel $I_{Rejection}$ level. Record this value in Table 21 below.

15) Adjust the second unmodulated signal source to 433,920 MHz − 500 kHz (433,470 MHz). Set the level to 20 dB below the $E_{THR\ Read}$ level set in step 6.

16) Adjust the second generator to the level at which the tag no longer responds to the Wake Up plus Collect commands from the 1st generator. This is considered the tag's lower 2nd Adjacent Channel $I_{Rejection}$ level. Record this value in Table 21 below.

9.5.2.2 Modulated interference rejection:

1) Set up all test equipment in an anechoic chamber or some other fully characterized and controlled location free from interference sources and propagation influences, such as significant signal reflections, absorptions, or blockages.

   Tests should be run using two identical reference antennas attached to two signal sources, with one antenna also connected to a receiver.

   Recommended test distance between the tag's location and the source antennas should be 2 m, minimum, with 3 m preferred. The two antennas should be equal in gain and separated from each other by at least one wavelength to reduce interactions between them.

2) Set signal source 1 to transmit FSK with a 433,920 MHz centre frequency, using FSK modulation at ±50 kHz with waveforms and timings as specified in ISO/IEC 18000-7. The signal source's output level shall be adjustable to the $E_{THR\ Read}$ level plus 3 dB.

   Use a code generator certified to properly generate relevant command sequences and timing as a modulator for this signal source.

   The generator should be set up so the following conditions exist when modulated:

   Symbol LOW = fc +50 kHz (433,970 MHz when centred at 433,920 MHz)
   Symbol HIGH = fc -50 kHz (433,870 MHz when centred at 433,920 MHz)

© ISO/IEC 2007 – All rights reserved

Copyright International Organization for Standardization
Provided by IHS under license with ISO
No reproduction or networking permitted without license from IHS
Not for Resale

3) Use an FSK receiver and decoder to receive, decode, and send tag responses to appropriate monitoring software so tag responses can be evaluated. Synchronize the decoder with the code generator so all protocol timing can be maintained within correct relationships.

4) Mount the tag being evaluated on a minimum 20 × 20 inch metal sheet reflector for this test, attached in the mounting configuration specified for the specific tag model being evaluated. Orient the tag so its main response is facing the source signal.

5) Alternatively, depending on expected tag usage, the tag can be placed on a non-metallic mounting plate or pole, or attached in the mounting configuration specified for the tag model being evaluated.

6) Adjust the signal source for minimum output, then send a Wakeup Header command followed immediately by a Collect command as defined in ISO/IEC 18000-7. Adjust the signal source until the tag under test responds reliably ($E_{THR\ Read}$), then increase the signal by 3 dB.

7) Adjust the second modulated signal source to 433,920 MHz. Set the level to 20 dB below the $E_{THR\ Read}$ level set in step 6.

8) Adjust the second generator to the level at which the tag no longer responds to the Wake Up plus Collect commands from the 1st generator. This is considered the tag's Co-Channel $I_{Rejection}$ level. Record this value in Table 21 below.

9) Adjust the second modulated signal source to 433,920 MHz + 250 kHz (434,170 MHz). Set the level to 20 dB below the $E_{THR\ Read}$ level set in step 6.

10) Adjust the second generator to the level at which the tag no longer responds to the Wake Up plus Collect commands from the 1st generator. This is considered the tag's upper 1st Adjacent Channel $I_{Rejection}$ level. Record this value in Table 21 below.

11) Adjust the second modulated signal source to 433,920 MHz − 250 kHz (433,670 MHz). Set the level to 20 dB below the $E_{THR\ Read}$ level set in step 6.

12) Adjust the second generator to the level at which the tag no longer responds to the Wake Up plus Collect commands from the 1st generator. This is considered the tag's lower 1st Adjacent Channel $I_{Rejection}$ level. Record this value in Table 21 below.

13) Adjust the second modulated signal source to 433,920 MHz + 500 kHz (434,420 MHz). Set the level to 20 dB below the $E_{THR\ Read}$ level set in step 6.

14) Adjust the second generator to the level at which the tag no longer responds to the Wake Up plus Collect commands from the 1st generator. This is considered the tag's upper 2nd Adjacent Channel $I_{Rejection}$ level. Record this value in Table 21 below.

15) Adjust the second modulated signal source to 433,920 MHz − 500 kHz (433,470 MHz). Set the level to 20 dB below the $E_{THR\ Read}$ level set in step 6.

16) Adjust the second generator to the level at which the tag no longer responds to the Wake Up plus Collect commands from the 1st generator. This is considered the tag's lower 2nd Adjacent Channel $I_{Rejection}$ level. Record this value in Table 21 below.

Measure all tags. The interferer electromagnetic field value recorded is the smallest one of all measurements done.

9.5.3 Test report

The test report provides data for On Channel, 1st Adjacent Channel (±250 kHz), and 2nd Adjacent (±500 kHz) channels, plus all environmental conditions and communication parameters. Record all these parameters according to the example in Table 21.

© ISO/IEC 2007 – All rights reserved
Copyright International Organization for Standardization
Provided by IHS under license with ISO
No reproduction or networking permitted without license from IHS
Not for Resale

Table 21 — Parameters recorded for $I_{Rejection}$ measurement

Test: Interference rejection ($I_{REJECTION}$)					
Mounting Material:					
Temperature:	Humidity:				
Tag Protocol:	Tag UII:				
Forward Link					
Modulation Index: %	Data Rate: kbps		Data Coding:		
Command: 0x					
Return Link					
Data Rate: kbps	Data Coding:				
Test Results					
Interferer Frequency Offset	**0 Hz**	**250 khz**	**-250 kHz**	**500 kHz**	**-500 kHz**
CW Interference Rejection					
Modulated Interference Rejection					

9.6 Maximum operating electromagnetic field (E_{max})

9.6.1 Purpose

This test determines the maximum electromagnetic field (E_{Max}) that still allows tag identification.

9.6.2 Test procedure

Run the tests at 433,920 MHz, nominal. First, set the signal source's electromagnetic field to a level that allows a tag to respond to a command in order to confirm that it operates correctly. The signal level will then be raised to a level where the tag ceases to respond to commands or to the full signal level available from the test source, whichever comes first.

Maximum electromagnetic field, E_{max}, measurement procedure:

1) Set up all test equipment in an anechoic chamber or some other fully characterized and controlled location free from interference sources and propagation influences, such as significant signal reflections, absorptions, or blockages.

   Tests should be run using a known reference antenna attached to the signal source and receiver.

   Recommended test distance between the tag's location and the source antenna should be 2 m, maximum, with 1 m preferred.

   Set a signal source to transmit FSK with a 433,920 MHz centre frequency, using FSK modulation at ±50 kHz with waveforms and timings as specified in ISO/IEC 18000-7. The signal source's output level shall be adjustable over a 100 dB range in 10 dB steps, with at least 10 dBm available as the maximum output.

   It may be necessary to add a power amplifier, with up to 10 watts output, between the signal source and the antenna to obtain sufficient signal strength to overload the tag.

   Any relay or duplexer used to isolate the signal source from the receiver used in these tests shall have sufficient isolation and power handling capacity to handle this power level.

   Use a code generator certified to properly generate relevant command sequences and timing as a modulator for this signal source.

© ISO/IEC 2007 – All rights reserved

Copyright International Organization for Standardization
Provided by IHS under license with ISO
No reproduction or networking permitted without license from IHS
Not for Resale

The signal source should be set up so the following conditions exist when modulated:

Symbol LOW = fc +50 kHz (433,970 MHz when centred at 433,920 MHz)
Symbol HIGH = fc -50 kHz (433,870 MHz when centred at 433,920 MHz)

2) Use an FSK receiver and decoder to receive, decode, and send tag responses to appropriate monitoring software so tag responses can be evaluated. Synchronize the decoder with the code generator so all protocol timing can be maintained within correct relationships.

3) Mount the tag being evaluated on a minimum 20 × 20 inch metal sheet reflector for this test, attached in the mounting configuration specified for the specific tag model being evaluated. Orient the tag so its main response is facing the source signal.

4) Alternatively, depending on expected tag usage, the tag can be placed on a non-metallic mounting plate or pole, or attached in the mounting configuration specified for the tag model being evaluated.

5) Adjust the signal source for minimum output, then send a Wakeup Header command followed immediately by a Collect command as defined in ISO/IEC 18000-7. Adjust the signal source until the tag under test responds reliably.

6) Adjust the signal source level for maximum output, then send a Wakeup Header command followed immediately by a Collect command as defined in ISO/IEC 18000-7.

7) If the tag responds, record this level as E_{max} for the tag. If the tag does not respond, lower the source level until the tag begins to respond once again, and record this level as E_{max}. Test with the tag mounted vertically, then when horizontally polarized.

8) Measure all tags. The E_{max} value is the lowest electromagnetic field strength noted that causes the tag to cease to respond properly out of all measurements made during these tests.

NOTE If one tag is clearly lower in overload capacity than all others—requires less signal before it ceases to respond—it should be removed from the tests and replaced with another tag.

9.6.3 Test report

The test report provides data recorded for the tags. Also record the environmental conditions and communication parameters. Record all parameters according to the example in Table 22.

Table 22 — Parameters recorded for E_{max} measurement

Test: Maximum electromagnetic field (E_{max}) at centre frequency		
Mounting Material:		
Temperature:	Humidity:	
Tag Protocol:	Tag UII:	
Forward Link		
Deviation (kHz):	Data Rate: kbps	Data Coding:
Command: Wakeup followed by Collect command		
Return Link		
Data Rate: kbps	Data Coding:	
Test Results		
Centre Frequency		
xxx MHz		
E_{max} : xx,xx dBuV/m		

© ISO/IEC 2007 – All rights reserved
Copyright International Organization for Standardization
Provided by IHS under license with ISO
No reproduction or networking permitted without license from IHS
Not for Resale

9.7 Survival electromagnetic field ($E_{Survival}$)

9.7.1 Purpose

This test determines the maximum survival electromagnetic field ($E_{Survival}$) value after which the tag ceases to operate even if signal levels are returned to within the operating range as defined by $E_{THR\ Read}$ and E_{max}.

9.7.2 Test procedure

Expose each tag to an increasing electromagnetic field strength beyond the normally expected operating conditions, then attempt to read the tag with levels reset to a normal level between $E_{THR\ Read}$ and E_{max}. When the tag ceases to respond to normal signal levels, it indicates that it has not survived the last used overload signal level. The survival electromagnetic field ($E_{Survival}$) is the level of extreme electromagnetic field above E_{max} achieved before tag destruction.

Survival electromagnetic field, $E_{Survival}$, measurement procedure:

1) Set up all test equipment in an anechoic chamber or some other fully characterized and controlled location free from interference sources and propagation influences, such as significant signal reflections, absorptions, or blockages.

   Since this test uses higher EMF energy that could exceed appropriate human exposure levels, proper precautions should be taken.

   Tests should be run using a known reference antenna or radiating structure attached to the signal source and receiver.

   Recommended test distance between the tag's location and the source antenna should be 2 m, maximum, with 1 m preferred. Closer spacing may be required, depending on the type of EMF test equipment chosen to generate high-power EMF signals.

2) Set a signal source to transmit FSK with a 433,920 MHz centre frequency, using FSK modulation at ±50 kHz with waveforms and timings as specified in ISO/IEC 18000-7. Adjust the signal source's output below E_{max} but well above $E_{THR\ Read}$. It can be the same or a separate signal source from the high-power EMF generator being used to try to overload the tag.

   Use a code generator certified to properly generate relevant command sequences and timing as a modulator for this signal source.

   The generator should be set up so the following conditions exist when modulated:

   Symbol LOW = fc +50 kHz (433,970 MHz when centred at 433,920 MHz)
   Symbol HIGH = fc -50 kHz (433,870 MHz when centred at 433,920 MHz)

3) Use an FSK receiver and decoder to receive, decode, and send tag responses to appropriate monitoring software so tag responses can be evaluated. Synchronize the decoder with the code generator so all protocol timing can be maintained within correct relationships.

4) Mount the tag being evaluated on a minimum 20 × 20 inch metal sheet reflector for this test, attached in the mounting configuration specified for the specific tag model being evaluated. Orient the tag so its main response is facing the source signal.

5) Alternatively, depending on expected tag usage, the tag can be placed on a non-metallic mounting plate or pole, or attached in the mounting configuration specified for the tag model being evaluated.

6) Adjust the signal source for proper output, then send a Wakeup Header command followed immediately by a Collect command as defined in ISO/IEC 18000-7. Adjust the signal source until the tag under test responds reliably.

© ISO/IEC 2007 – All rights reserved

Copyright International Organization for Standardization
Provided by IHS under license with ISO
No reproduction or networking permitted without license from IHS
Not for Resale

7) Adjust the high-power signal source to a level higher than E_{max}, then remove this level (or if a single generator is being used, reduce the level to a normal reading level).

8) At a level between $E_{THR\ Read}$ and E_{max}, attempt to read the tag.

9) If the tag responds correctly, readjust the high-power signal source to a level at least 3 dB higher than the previous level used, then repeat step 8).

10) If the tag does not respond, repeat the read attempt several times to confirm that the tag has been damaged.

11) Measure all tags. The $E_{Survival}$ value is the lowest electromagnetic field strength noted out of all measurements just below the level that causes tag failure.

NOTE If one tag is clearly lower in survival capacity than all others—requires less signal before it ceases to function—it should be removed from the tests and replaced with another tag.

9.7.3 Test report

The test report gives the measured minimum electromagnetic field $E_{Survival}$ level causing damage to the tag. Record all parameters according to the example in Table 23.

Table 23 — Parameters recorded for $E_{Survival}$ measurement

Test: Survival electromagnetic field ($E_{Survival}$)	
Mounting Material:	
Temperature:	Humidity:
Tag Type:	Tag ID:
Test Results	
$E_{survival}$	**xx,xx V/m**

Copyright International Organization for Standardization
Provided by IHS under license with ISO
No reproduction or networking permitted without license from IHS
© ISO/IEC 2007 – All rights reserved
Not for Resale

Annex A
(informative)

Resonant frequency and Q factor measurement for inductive tag

A.1 Purpose

The purpose of this test is to determine the resonant frequency and the –3 dB bandwidth to calculate the quality factor of the tag for a magnetic field strength equal to $H_{THR\ Identification}$.

A.2 Test for ISO/IEC 18000-2 compliant tags

A.2.1 Test procedure

At a fixed magnetic field strength corresponding to 25% of $H_{THR\ Identification}$ the frequency of the generating field has to be varied. The frequency response of the tag is measured with low resonant loop. An example of test set-up is given on Figure A.1:

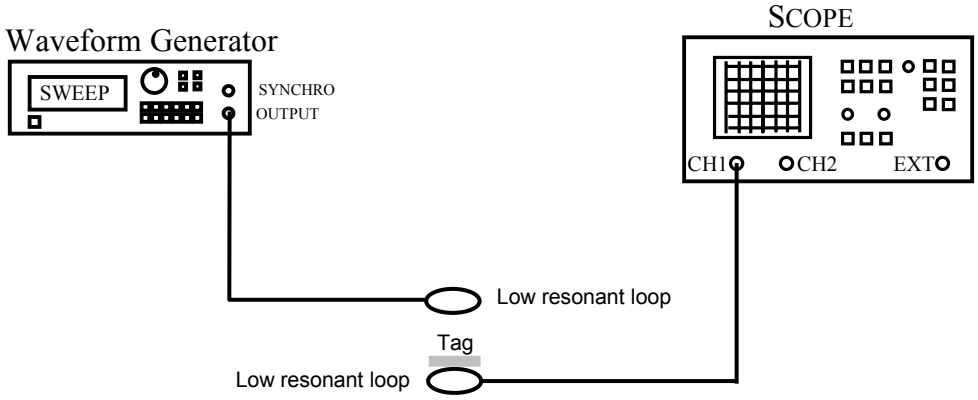

Figure A.1 — Set-up measurement example

Resonant frequency (F_{RES}) and quality factor (Q) measurement:

1) The waveform generator amplitude shall be set to 25% of $H_{THR\ Identification}$ and the waveform generator frequency to 125 kHz.

2) The tag shall be inserted in the equipment test.

3) the waveform generator amplitude shall be re-adjusted to 25% of $H_{THR\ Identification}$.

4) A frequency sweep shall be performed from 100 kHz to 150 kHz.

5) The tag frequency response (curve) shall be recorded with a scope connected to the sense coil.

6) The resonant frequency, F_{RES}, shall be measured and the quality factor, Q, shall be calculated from –3 dB bandwidth measurements.

NOTE The quality factor Q of the tag resonant circuit is $Q = \frac{F_{RES}}{BW}$; the bandwidth BW is defined at a level of –3 dB.

© ISO/IEC 2007 – All rights reserved

Copyright International Organization for Standardization
Provided by IHS under license with ISO
No reproduction or networking permitted without license from IHS
Not for Resale

A.2.2 Test report

The test report shall give the measured resonant frequency (F_{RES}) and quality factor (Q), the tag frequency response, the ambient temperature and ambient humidity and the tag UII. All these parameters shall be recorded according to the example in Table A.1.

Table A.1 — Parameters that shall be recorded for this measurement

Test : Resonant frequency (F_{RES}) and Quality factor (Q)	
Temperature :	Humidity:
Tag Protocol:	Tag UII:
Test Results	
Magnetic field strength = 25% $H_{THR\ Identification}$	
F_{RES}	**xx,xx kHz**
Q	**xx,xx kHz**
Resonant frequency curve @ 25% $H_{THR\ Identification}$:	

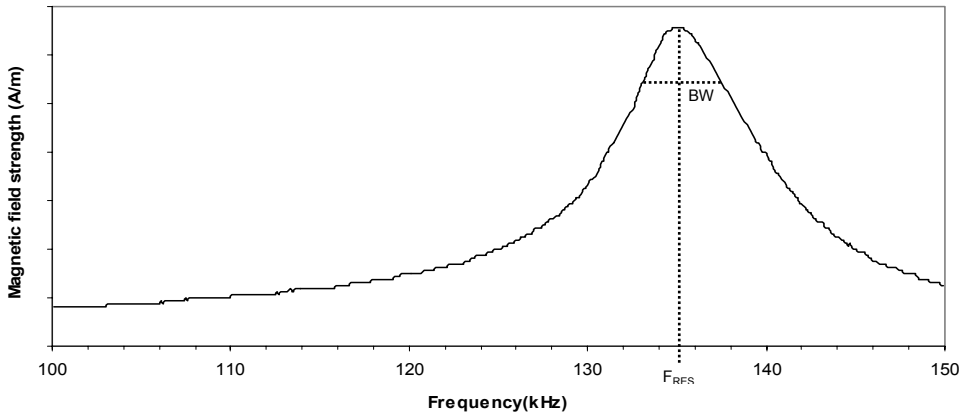

A.3 Test for ISO/IEC 18000-3 compliant tags

A.3.1 Test apparatus for ISO/IEC 18000-3

The test apparatus for ISO/IEC 18000-3 compliant tags specified in the conformance standard ISO/IEC TR 18047-3 is used with the following modifications specified in Figures A.2 and A.3.

© ISO/IEC 2007 – All rights reserved
Copyright International Organization for Standardization
Provided by IHS under license with ISO
No reproduction or networking permitted without license from IHS
Not for Resale

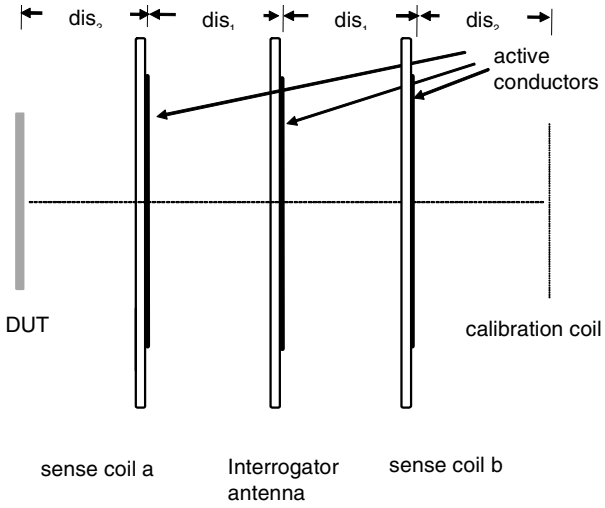

Symbol	Value
dis_1	60 mm
dis_2	40 mm

Figure A.2 — Modified test apparatus for resonant frequency measurement

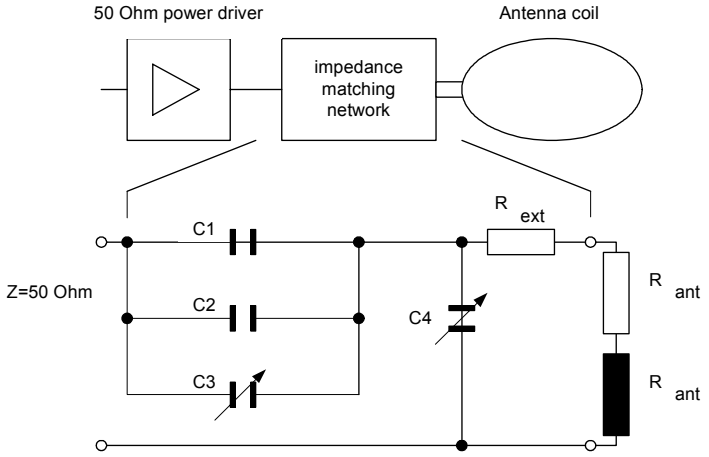

Symbol	Value
C1	150 pF
C2	82 pF
C3	5-30 pF
C4	2-22 pF
R_{ext}	5x220 Ω (in parallel)
Q	~ 1

Figure A.3 — Impedance matching network

© ISO/IEC 2007 – All rights reserved
Copyright International Organization for Standardization
Provided by IHS under license with ISO
No reproduction or networking permitted without license from IHS
Not for Resale

A.3.2 Test procedure

1) The waveform generator frequency shall be set to f_c=12,0 MHz.

2) The tag shall be inserted in the equipment test.

3) Starting from zero, the magnetic field strength shall be increased until a correct response of the tag (send inventory command – receive tags UII) can be observed. The values of operating frequency (f_c) and magnetic field strength (H_T) shall be noted.

4) The operating frequency shall be increased by 100 KHz.

5) Repeat steps 4) and 5) until the operating frequency reaches f_c=15,0 MHz.

6) The curve for H_T versus f_c shall be recorded into a diagram.

7) Find the minimum value of H_T and note the corresponding value of f_c, which is the resonant frequency $f_{RES} = f_c\ (_{HT,min})$ of the tag.

8) The quality factor, Q, shall be calculated from –3 dB bandwidth measurements.

NOTE the quality factor Q of the tag resonant circuit is $Q = \frac{F_{RES}}{BW}$; the bandwidth BW is defined at a level of –3 dB.

A.3.3 Test report

The test report shall give the measured resonant frequency (F_{RES}) and quality factor (Q), the tag frequency response, the ambient temperature and ambient humidity and the tag UII. All these parameters shall be recorded according to the example in Table A.2.

Table A.2 — Parameters that shall be recorded for this measurement

Test : Resonant frequency (F_{RES}) and Quality factor (Q)	
Temperature :	Humidity:
Tag Protocol:	Tag UII:
Test Results	
Magnetic field strength = $H_{THR\ Identification}$	
F_{RES}	**xx,xx MHz**
Q	**xx,xx kHz**
Resonant frequency curve @ $H_{THR\ Identification}$:	

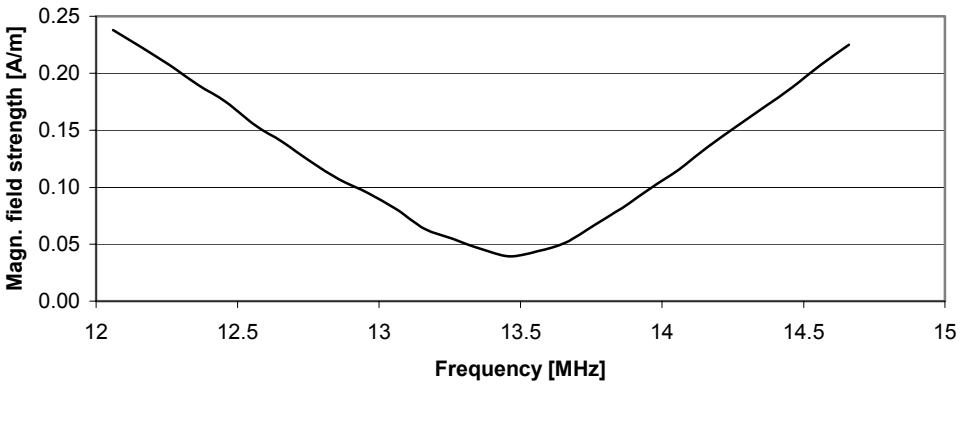

© ISO/IEC 2007 – All rights reserved
Copyright International Organization for Standardization
Provided by IHS under license with ISO
No reproduction or networking permitted without license from IHS
Not for Resale

Annex B
(normative)

Test apparatus modification for ISO/IEC 18000-3 compliant tags for field strengths > 5A/m

B.1 Purpose

The test apparatus described in ISO/IEC TR 18047-3 is only designed for a magnetic field strength up to 5 A/m. For test requiring a magnetic field strength > 5 A/m the test setup of ISO/IEC TR 18047-3 shall be modified according to the description in this section.

For measurements > 5 A/m to 12 A/m the modifications shown in Figure B.1 apply. For measurements > 12 A/m requires additionally to change the maximum voltage and power dissipation of the electronic components (e.g. of the impedance matching network).

NOTE These tests may require field strengths that exceed the recommended human exposure limits to EMF and appropriate pre-cautions should be taken.

B.2 Details

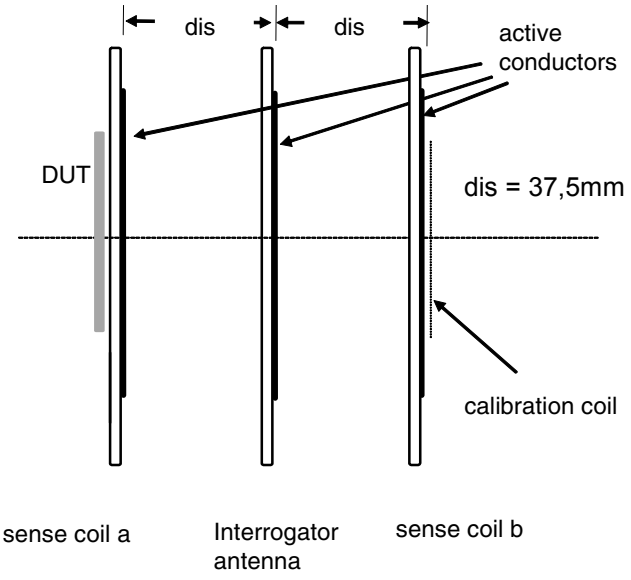

Figure B.1 — Modified test apparatus for a magnetic field strength from >5 A/m to 12 A/m (H_{max} and $H_{Survival}$)

--`,,```,,,,````-`-`,,`,,`,`,,`---

© ISO/IEC 2007 – All rights reserved
Copyright International Organization for Standardization
Provided by IHS under license with ISO
No reproduction or networking permitted without license from IHS
Not for Resale

Annex C
(normative)

Test apparatus modification for ISO/IEC 18000-6 compliant tags

C.1 Purpose

This annex describes a test antenna (Figure C.1) to be used for evaluating UHF inductive tags, as well as a measurement range for such testing. It also describes a matching network (Figure C.2) for the test antenna.

C.2 Antenna

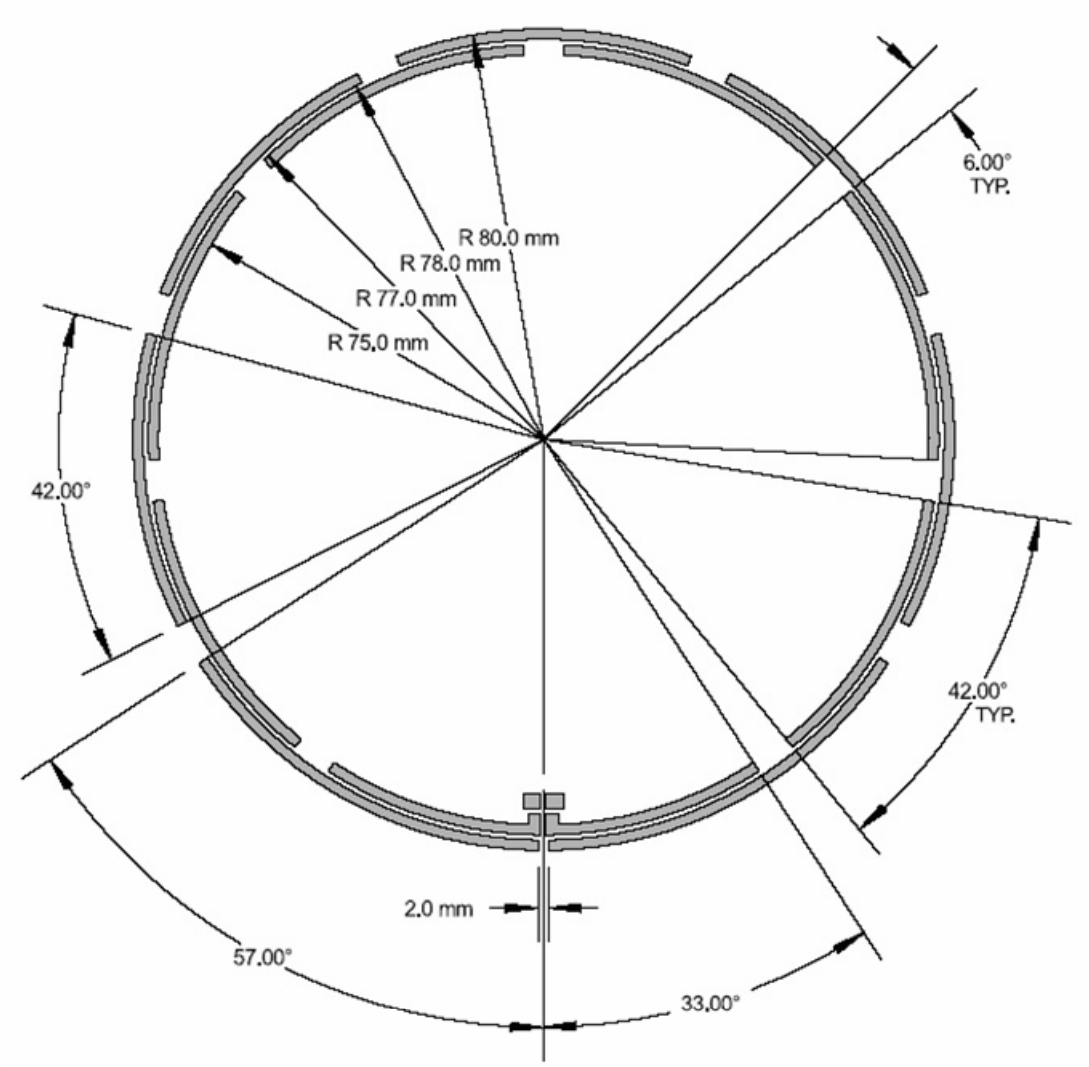

Figure C.1 — The antenna

© ISO/IEC 2007 – All rights reserved
Copyright International Organization for Standardization
Provided by IHS under license with ISO
No reproduction or networking permitted without license from IHS
Not for Resale

C.3 Pad Detail and Matching Network

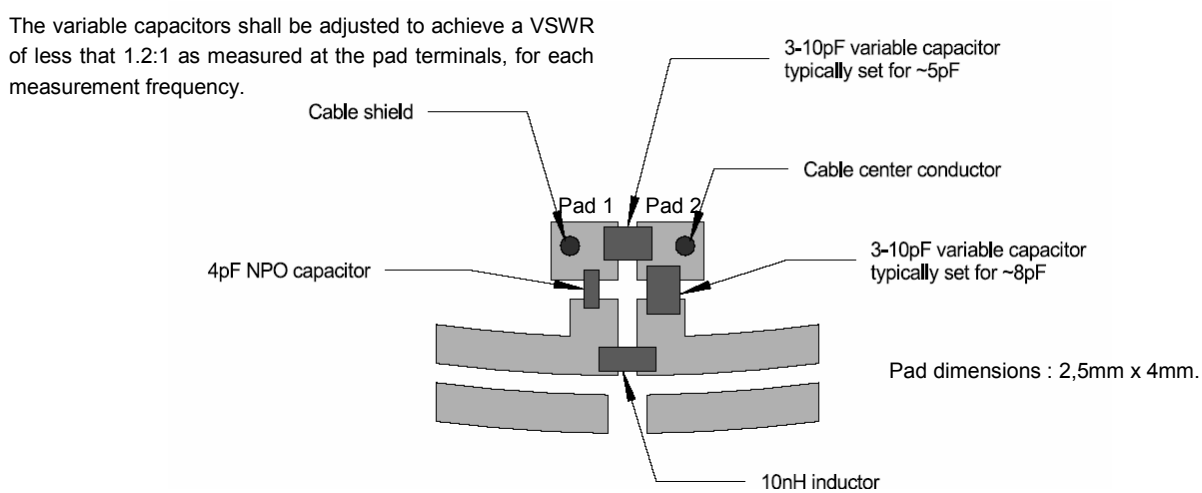

Figure C.2 — The matching network

C.4 Enclosure and Mounting

The Antenna shall be mounted in an enclosure as shown in Figure C.3. The enclosure size is

Inside diameter: 22,9 cm at the base; 23,2 cm at the top; linear taper
Sidewall height: 6,4 cm
Standoff height: 5,0 cm

The enclosure should be made from conductive material such as aluminium

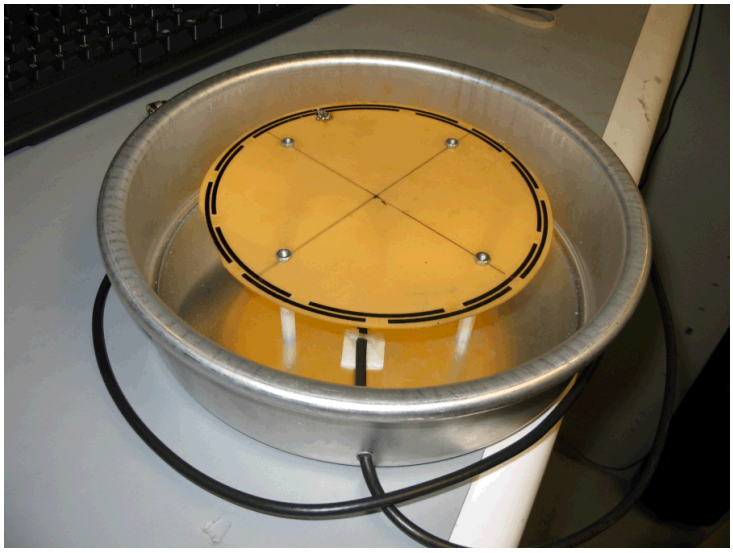

Figure C.3 — The test apparatus

C.5 Measurement Range

The distance from the test antenna to the tags should be 10 cm.

--`,,```,,,,````-`-`,,`,,`,`,,`---

© ISO/IEC 2007 – All rights reserved

Copyright International Organization for Standardization
Provided by IHS under license with ISO
No reproduction or networking permitted without license from IHS
Not for Resale

Annex D
(informative)

Power to electric field conversion

$$E = \frac{\sqrt{P * G}}{R} * 5.477$$

Where E is the electric field (V/m).
P is the generator output power (W).
G is the antenna gain (dB).
R is tag to antenna distance (m).

© ISO/IEC 2007 – All rights reserved
Copyright International Organization for Standardization
Provided by IHS under license with ISO
No reproduction or networking permitted without license from IHS
Not for Resale

Annex E
(informative)

Inventory command for all parts of ISO/IEC 18000

E.1 ISO/IEC 18000-2

Table E.1 — ISO/IEC 18000-2 inventory command

PART	COMMAND
TYPE A	Inventory (0x00)
TYPE B	Inventory (0x00)

E.2 ISO/IEC 18000-3

Table E.2 — ISO/IEC 18000-3 inventory command

PART	COMMAND
MODE 1	Inventory (0x01)
MODE 2	Read command (UID)

E.3 ISO/IEC 18000-6

Table E.3 — ISO/IEC 18000-6 inventory command

PART	COMMAND
TYPE A	Init_Round_All
TYPE B	Group_Select
TYPE C	Query+ACK(RN16)

© ISO/IEC 2007 – All rights reserved

Copyright International Organization for Standardization
Provided by IHS under license with ISO
No reproduction or networking permitted without license from IHS
Not for Resale

Bibliography

[1] ETSI EN 302 208 (all parts), *Electromagnetic compatibility and Radio spectrum Matters (ERM); Radio Frequency Identification Equipment operating in the band 865 MHz to 868 MHz with power levels up to 2 W*

[2] ETSI EN 300 220-1 (2000), *ElectroMagnetic Compatibility and Radio Spectrum Matters (ERM); Short Range Devices (SRD); Radio equipment to be used in the 25 MHz to 1 000 MHz frequency range with power levels ranging up to 500 mW; Part 1: Technical characteristics and test methods*

[3] ETSI EN 300 220-2 (2000), *ElectroMagnetic Compatibility and Radio Spectrum Matters (ERM); Short Range Devices (SRD); Radio equipment to be used in the 25 MHz to 1 000 MHz frequency range with power levels ranging up to 500 mW; Part 2: Supplementary parameters not intended for conformity purposes*

[4] ETSI EN 300 220-3 (2000), *Electromagnetic compatibility and Radio spectrum Matters (ERM); Short Range Devices (SRD); Radio equipment to be used in the 25 MHz to 1 000 MHz frequency range with power levels ranging up to 500 mW; Part 3: Harmonized EN covering essential requirements under article 3.2 of the R&TTE Directive*

[5] ETSI EN 300 330 (1999), *ElectroMagnetic compatibility and Radio Spectrum Matters (ERM); Short Range Devices (SRD); Technical characteristics and test methods for radio equipment in the frequency range 9 kHz to 25 MHz and inductive loop systems in the frequency range 9 kHz to 30 MHz*

[6] ETSI EN 300 440 (1995), *Radio Equipment and Systems (RES); Short Range Devices; Technical characteristics and test methods for radio equipment to be used in the 1 GHz to 25 GHz frequency range*

[7] ISO/IEC 15961, *Information technology — Radio frequency identification (RFID) for item management — Data protocol: application interface*

[8] ISO/IEC 15962, *Information technology — Radio frequency identification (RFID) for item management — Data protocol: data encoding rules and logical memory functions*

[9] ISO/IEC 15963, *Information technology — Radio frequency identification for item management — Unique identification for RF tags*

[10] FCC OET Bulletin 65, *Evaluating Compliance with FCC Guidelines for Human Exposure to Radio frequency Electromagnetic Fields*

[11] CEPT ERC 70-03, *Recommendation relating to the use of short range devices (SRD)*

[12] 1999/519/EC, *Council Recommendation of 12 July 1999 on the limitation of exposure of the general public to electromagnetic fields (0 Hz to 300 GHz)*

[13] ISBN 92-67-10188-9: *ISO Guide to the Expression of Uncertainty in Measurement*

© ISO/IEC 2007 – All rights reserved
Copyright International Organization for Standardization
Provided by IHS under license with ISO
No reproduction or networking permitted without license from IHS
Not for Resale

Copyright International Organization for Standardization
Provided by IHS under license with ISO
No reproduction or networking permitted without license from IHS
Not for Resale

ICS 35.040

Price based on 54 pages

--`,,```,,,,````-`-`,,`,,`,`,,`---

© ISO/IEC 2007 – All rights reserved
Copyright International Organization for Standardization
Provided by IHS under license with ISO
No reproduction or networking permitted without license from IHS
Not for Resale