INTERNATIONAL STANDARD

ISO/IEC 18010

2002

AMENDMENT 1
2005-12

Amendment 1

Information technology – Pathways and spaces for customer premises cabling

© IEC 2005 Droits de reproduction réservés — Copyright - all rights reserved

International Electrotechnical Commission, 3, rue de Varembé, PO Box 131, CH-1211 Geneva 20, Switzerland
Telephone: +41 22 919 02 11 Telefax: +41 22 919 03 00 E-mail: inmail@iec.ch Web: www.iec.ch

Commission Electrotechnique Internationale
International Electrotechnical Commission
Международная Электротехническая Комиссия

PRICE CODE L

For price, see current catalogue

Copyright International Organization for Standardization
Provided by IHS under license with ISO
No reproduction or networking permitted without license from IHS

Not for Resale

FOREWORD

Amendment 1 to International Standard ISO/IEC 18010 was prepared by subcommittee 25: Interconnection of information technology equipment, of ISO/IEC joint technical committee 1: Information technology.

Copyright International Organization for Standardization
Provided by IHS under license with ISO
No reproduction or networking permitted without license from IHS Not for Resale

Page 2

Contents

Add the following new items in the table of contents:

Annex A (normative) Additional requirements for multi-tenant buildings

A.1 INTRODUCTION

A.2 Entrance facilities

- A.2.1 Entrance location considerations
- A.2.2 Telecommunications service entrance pathway
- A.2.3 Access
- A.2.4 Wireless

A.3 Access provider spaces and service provider spaces

- A.3.1 General
- A.3.2 Location
- A.3.3 Pathways
- A.3.4 Design

A.4 Common equipment room

- A.4.1 General
- A.4.2 Location
- A.4.3 Pathways
- A.4.4 Design

A.5 Common telecommunications room

- A.5.1 General
- A.5.2 Location
- A.5.3 Pathways
- A.5.4 Design

A.6 Building and campus pathway requirements

- A.6.1 Building pathways
- A.6.2 Campus pathways

Annex B (informative) Additional recommendations for multi-tenant buildings

Existing Annexes A and B have to be renumbered as Annexes C and D, as follows:

Annex C (informative) Pathways and cable stresses

Annex D (informative) Building entrance facility

Copyright International Organization for Standardization
Provided by IHS under license with ISO
No reproduction or networking permitted without license from IHS Not for Resale

General

Update the references to tables and figures whose numbers have been changed.

Page 5

INTRODUCTION

Add the following new paragraph:

This standard has 4 annexes:

Annex A (normative)	Additional requirements for multi-tenant buildings
Annex B (informative)	Additional recommendations for multi-tenant buildings
Annex C (informative)	Pathway and cable stresses
Annex D (informative)	Building entrance facility

Page 6

1 Scope

Replace the second paragraph by the following text:

This International Standard also influences space allocation within the building. Both single- and multi-tenant buildings for residential and commercial use are considered by this standard.

Page 7

3 Definitions and abbreviations

3.1 Definitions

Add the following new definitions after 3.1.9:

3.1.10
common equipment room (telecommunications)
enclosed space used for equipment and backbone interconnections for more than one tenant in a building

3.1.11
common telecommunications room
enclosed space used for backbone interconnections for more than one tenant in a building, which may also house equipment

Renumber the existing definitions 3.1.10 to 3.1.26 as 3.1.12 to 3.1.28.

Copyright International Organization for Standardization
Provided by IHS under license with ISO
No reproduction or networking permitted without license from IHS Not for Resale

Page 9

3.2 Abbreviations

Replace the existing text by the following:

CER	Common equipment room
CTR	Common telecommunications room
EMI	Electromagnetic interference
HVAC	Heating, ventilation and air conditioning
IT	Information technology

4 Conformance

Add the following new items:

c) For multi-tenant buildings, Annex A shall also be observed.

d) Local regulations shall be followed.

Page 10

5 Structure of a pathways' and spaces' infrastructure

Replace existing figure 1 by the following figure 1:

--`,,```,,,,````-`-`,,`,,`,`,,`---

Copyright International Organization for Standardization
Provided by IHS under license with ISO
No reproduction or networking permitted without license from IHS Not for Resale

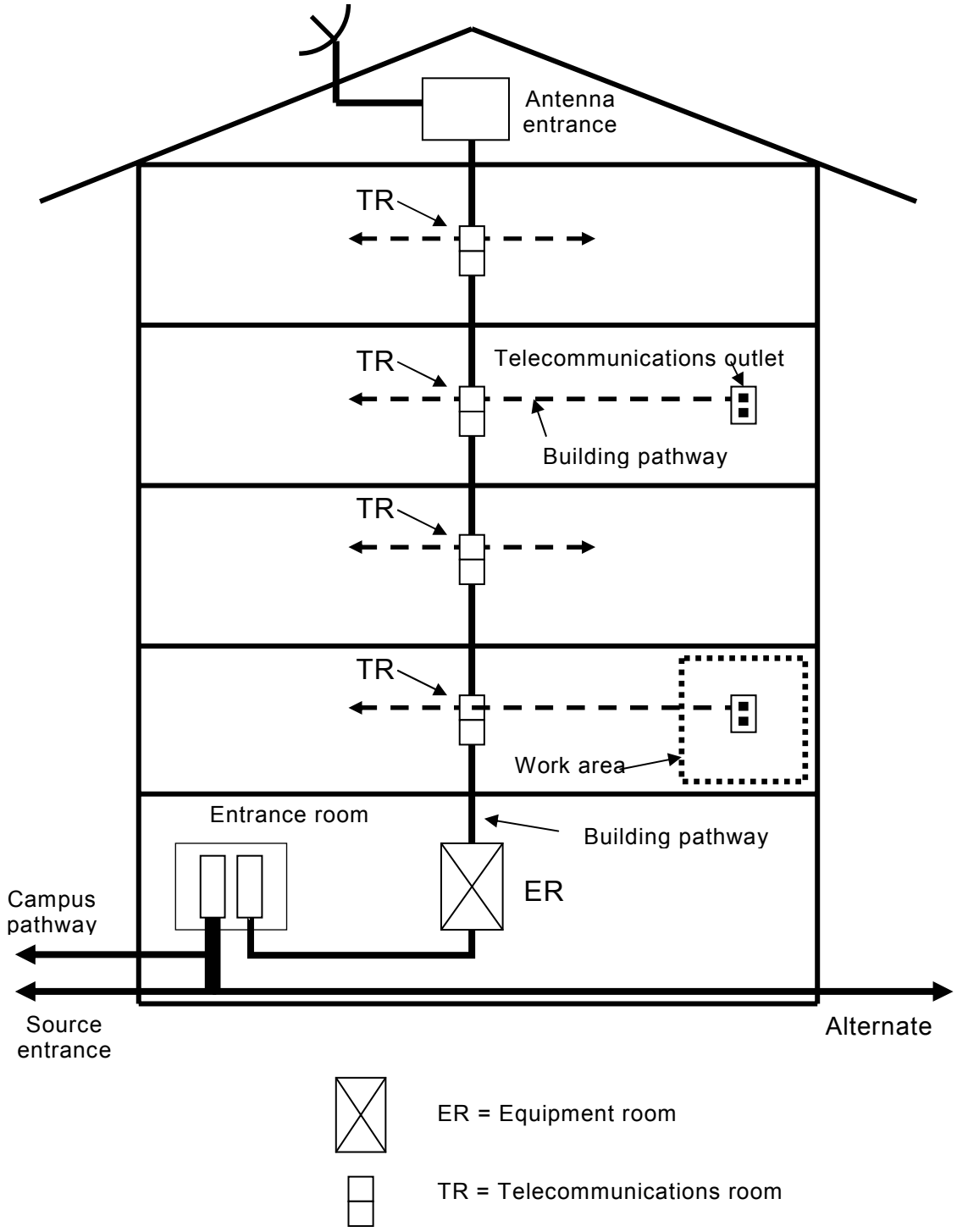

Figure 1 − Basic elements of a pathways' and spaces' infrastructure

Page 11

6.3 Telecommunications room

Add the following new paragraph before the last paragraph:

Telecommunications room temperature and humidity shall provide for continuous operation of the installed active equipment. Humidifying and dehumidifying equipment may be required depending upon local environmental conditions.

--`,,```,,,,````-`-`,,`,,`,`,,`---

Copyright International Organization for Standardization
Provided by IHS under license with ISO
No reproduction or networking permitted without license from IHS Not for Resale

6.4 Equipment room

Add, on page 12, the following paragraph after the fifth paragraph:

Equipment room temperature and humidity shall provide for continuous operation of the installed active equipment. Humidifying and dehumidifying equipment may be required depending upon local environmental conditions.

Page 12

6.5 Main terminal space

Add an new subclause 6.6 after 6.5.

6.6 Home distributor (HD)

The HD shall be able to contain telecommunications equipment, cable terminations and associated cross-connect cables.

The HD should be located as close as practicable to the centre of the area served and preferably in the core area.

The HD space shall be dedicated to the HD function and related support facilities. HD space should not be shared with electrical installations other than those for telecommunications.

A minimum of one dedicated electrical outlet shall be provided for equipment power.

NOTE Local regulations should be followed for electrical power distribution.

Renumber existing subclauses 6.6 to 6.9 as 6.7 to 6.10.

Page 20

8.8 Handholes

Add, after the end of subclause 8.8, the following two new annexes A and B and renumber existing annex A and annex B as annex C and annex D, respectively.

--`,,```,,,,````-`-`,,`,,`,`,,`---
Copyright International Organization for Standardization
Provided by IHS under license with ISO
No reproduction or networking permitted without license from IHS Not for Resale

Annex A
(normative)

Additional requirements for multi-tenant buildings

A.1 INTRODUCTION

Annexes A and B focus on the pathways and spaces that are common to multi-tenant buildings and campuses.

Telecommunications pathways and spaces in multi-tenant buildings are challenged by the phased nature of their use. After the building is constructed and the first group of tenants moves in, the tenant's telecommunications needs may immediately cause modifications to the building. Over a span of years, as tenants cycle through the building, evolving tenant needs will oblige the owner/agent of the building to adapt its installations to these demands.

Multi-tenant commercial office and residential buildings have life cycles that mirror that of single-tenant buildings. Many buildings are over 100 years old. Over time, these older buildings have become severely challenged to support escalating demands on their pathways and spaces as a result of tenants' ever-increasing needs for telecommunications connectivity.

Figure A.1 illustrates a representative model for the various functional elements that comprise multi-tenant pathways and spaces for a building. This is not intended to be an all-inclusive representation. It depicts the relationship between the elements and how they are configured to create a total system. Table A.1 provides a summary of the telecommunications spaces.

Elements of multi-tenant spaces include, but are not limited to,

- entrance room,
- access provider space,
- service provider space,
- common equipment room and
- common telecommunications room.

Copyright International Organization for Standardization
Provided by IHS under license with ISO
No reproduction or networking permitted without license from IHS Not for Resale

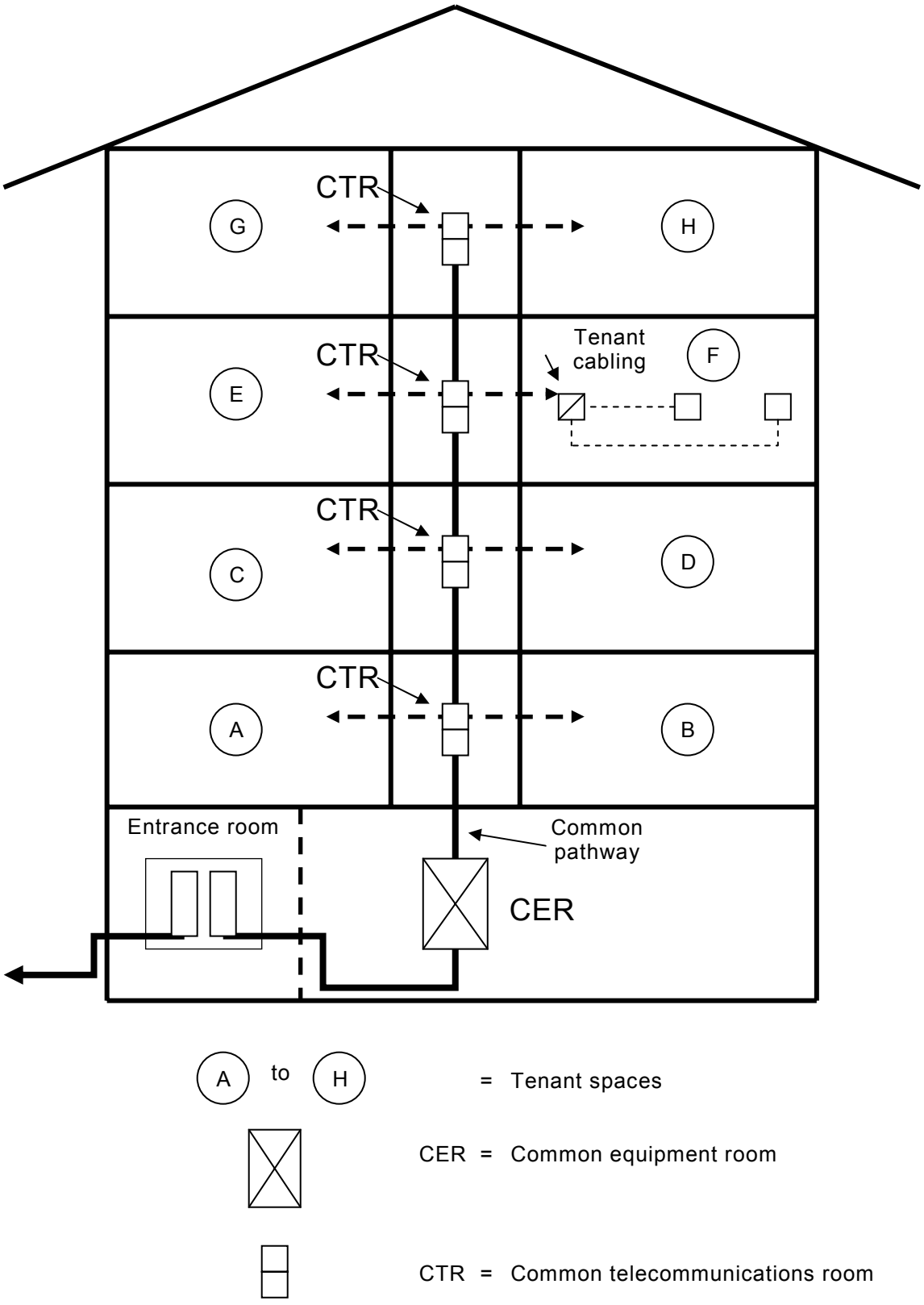

Figure A.1 – Example of pathways and spaces components used to service a multi-tenant building

Copyright International Organization for Standardization
Provided by IHS under license with ISO
No reproduction or networking permitted without license from IHS Not for Resale

Table A.1 – Summary of spaces used to service a multi-tenant building

Space name	Acronym	Primary responsible organization / secondary responsible organization
Entrance room		Building owner or agent
Access provider space		Access provider / building owner or agent
Service provider space		Service provider / building owner or agent
Common equipment room	CER	Building owner or agent

A.2 Entrance facilities

A.2.1 Entrance location considerations

Consideration should be given to facility, occupants' and users' telecommunications wireline and wireless connectivity needs. If access to both wireline and wireless services is required, then the entrance facilities may require adjustment in size, quantity and location. Mechanical fixtures (e.g., piping, ductwork, pneumatic tubing) not related to the support of the entrance facility should not be installed in, pass through, or enter the telecommunications entrance facility.

A.2.2 Telecommunications service entrance pathway

Telecommunications service entrance pathways shall be specified to support the initial and forecasted telecommunications needs including the total building area served and wireline and wireless tenant connectivity requirements. The forecasted telecommunications needs shall be agreed upon between the building owner and the designer. Accommodations should be made for multiple service entrance points to support multiple access providers.

A.2.3 Access

Access to the entrance room shall be controlled by the primary or secondary responsible organization (see table 1). Signage, if used, should be developed within the security plan of the building.

A.2.4 Wireless

A.2.4.1 Line of sight

Wireless transmission/reception device placement is critical to its performance. Obstructions to a wireless transmission/reception device function can take many forms including radio frequencies, electrical and physical objects. Obstructions may be on the same platform, on an adjoining building or be located some distance away. Wireless transmission/reception devices shall be in line of sight with its target system if required by the employed technology. Certain systems will not function properly if the wireless transmission/reception device's line of sight is obstructed.

A.2.4.2 Cable pathways

Cable pathways from tower-mounted wireless transmission/reception devices should be consolidated where possible on the tower and remain consolidated along their route to the access provider space. The most direct route between the wireless transmission/reception device and the entrance facility should be followed. To protect cables from environmental damage and isolate cables from pedestrian traffic, they should be placed inside conduit or in cable tray, or be otherwise secured from physical damage.

--`,,```,,,,````-`-`,,`,,`,`,,`---

Copyright International Organization for Standardization
Provided by IHS under license with ISO
No reproduction or networking permitted without license from IHS Not for Resale

A.2.4.3 Location

Depending upon function and site conditions, wireless service transmission/reception spaces may be located at the building's upper rooftop, outside walls or on lower roof setbacks. Wireless service transmission/reception points may also be located inside the building. Wherever possible, wall-mounted wireless transmission/reception device support structures should be mounted at a minimum of 2 m above surfaces where foot traffic may occur.

A.2.4.4 Support structures

A.2.4.4.1 General

A structural analysis shall be carried out by a relevant specialist to aid in the design and placement of wireless transmission/reception device support structures.

A.2.4.4.2 Towers

Where the location or height of the building makes it a desirable wireless transmission/ reception device site, consideration should be given to installation of a tower on top of the building. Towers are desirable because they allow efficient use of limited rooftop space, and offer significant flexibility regarding space planning. Multiple access providers and other users may share space on a single tower.

A.2.4.4.3 Non-penetrating wireless transmission/reception device mounts

Wireless transmission/reception devices that are of limited weight and size may be installed on mounts, which are not fastened to the building structural members. These types of wireless transmission/reception device mounts are often referred to as sled mounts, ballast mounts or non-penetrating wireless transmission/reception device mounts. These mounts remain secured to the rooftop by their own weight plus addition of dead weights to keep the wireless transmission/reception device in place. The amount of weight (ballast) required is calculated with consideration given to loading created by wind and ice build-up on the wireless transmission/reception device and supporting system. In some cases, these mounts are tethered for increased stability. Local regulations may provide specific requirements that have to be observed. The building owner has to be consulted for permission to add load to the roof.

A.2.4.4.4 Penetrating wireless transmission/reception device mounts

Wireless transmission/reception device mounting systems that penetrate either the rooftop or walls of a building are commonly employed. The primary considerations with such systems are the loading that the system places on the structure and waterproofing of any penetration points.

A.2.4.5 Design considerations

Electrical service shall be sized to support functions that include, but are not limited to antenna lighting, de-icing and motor-operated functions where required. Where mandated by regulatory code, automatic switchover to standby power shall be provided. Sizing of the electrical service shall be carried out by a relevant specialist.

A.3 Access provider spaces and service provider spaces

A.3.1 General

Access to the access provider spaces and service provider spaces shall be controlled by the primary or secondary responsible organization (see table 1). Common approaches include lockable cabinets and caged spaces.

Copyright International Organization for Standardization
Provided by IHS under license with ISO
No reproduction or networking permitted without license from IHS Not for Resale

A.3.2 Location

A.3.2.1 General

Access provider spaces and service provider spaces should be in close proximity to the common equipment room (CER). The access provider and service provider spaces should be selected so that the area may be expanded. Access provider spaces and service provider spaces shall be configured so that each can be accessed through common-use corridors.

Wireless access provider spaces should be located as close as practical to the wireless transmission/reception devices to which they are connected.

A.3.2.2 Electromagnetic interference

Access provider and service provider spaces shall be located away from sources of electromagnetic interference. Examples of such noise sources include electrical power supply transformers, motors and generators, x-ray equipment, radio or radar transmitter and induction sealing devices.

A.3.3 Pathways

Adequate cable pathway should be provided from access provider spaces to the CER, from service provider spaces to the CER, and from access provider spaces to service provider spaces.

A.3.4 Design

A.3.4.1 Architectural considerations

A.3.4.1.1 Partitions

Where access providers and service providers share space, individual spaces should be segregated by means of partitions. Partitions may be comprised of wire mesh or architectural assemblies.

A.3.4.1.2 Mounting of equipment

Adequate provision shall be made for mounting of equipment.

A.3.4.1.3 Ceiling height

The height between the finished floor and the lowest point of the ceiling shall be a minimum of 2,2 m. For additional considerations, see recommendation in B.1.1.

A.3.4.1.4 Treatment

Floors, walls and ceiling should be treated to eliminate dust. Finishes should be light in colour to enhance room lighting. Consideration should be given to application of floor covering comprised of anti-static material.

A.3.4.1.5 Lighting

Lighting shall be a minimum of 500 lx measured 1 m above the finished floor, mounted 2,2 m minimum above the finished floor. For additional considerations, see recommendation in B.1.3

NOTE - Lighting fixtures should not be powered from the same electrical distribution panel as the telecommunications equipment in the access provider space or service provider space. Dimmer switches should not be used and emergency lighting and signs should be properly placed in such a way that an absence of primary lighting will not hamper emergency exit.

Copyright International Organization for Standardization
Provided by IHS under license with ISO
No reproduction or networking permitted without license from IHS Not for Resale

A.3.4.1.6 Suspended ceiling

Suspended ceiling should not be provided within either the access provider space or within the service provider space. In such cases where fireproofing may be sprayed onto the exposed ceiling, the fireproofing should be treated to mitigate airborne dust.

A.3.4.1.7 Door

Doors shall be a minimum of 0,65 m wide and 1,8 m high, without doorsill, hinged to open outward or slide side-to-side, or be removable. The door shall be fitted with a lock. Consideration should be given to using double doors with removable centre-post. For additional considerations, see recommendation in B.1.4.

A.3.4.1.8 Floor loading

Access provider spaces and service provider spaces shall be located on floor areas designed with an appropriate floor loading. Concentrated floor loads frequently reach and exceed 5,75 kPa and floor-loading capacity shall be designed accordingly. A relevant specialist shall verify that concentrations of proposed equipment do not exceed the floor-loading limit.

A.3.4.1.9 Signage

Signage, if used, should be developed within the security plan of the building.

When wireless access provider spaces and service provider spaces are employed and wherever exposure to radio frequency electromagnetic fields may cause harm to personnel, hazard-warning signs should be posted.

A.3.4.1.10 Seismic considerations

In areas with significant risk of seismic activity, installation practices shall ensure continuity of telecommunications services under seismic stresses.

A.3.4.2 Environmental considerations

A.3.4.2.1 Heating, ventilation and air conditioning (HVAC)

A.3.4.2.1.1 General

Access provider and service provider equipment is often designed to operate in extreme environmental conditions such as temperature. Actual air handling requirements should be calculated based on potential heating and cooling demand associated with equipment which may be present in the access provider and service provider space.

A.3.4.2.1.2 Continuous operation

If deployed, HVAC shall be provided on a 24 hours-per-day, 365 days-per-year basis. If the building system cannot assure continuous operation for large equipment applications, then a stand-alone unit shall be provided for access provider and service provider spaces.

A.3.4.2.1.3 Standby operation

If a standby power source is available in the building, consideration should be given to also connecting the HVAC system serving the telecommunications access provider space and service provider space to the standby supply.

Copyright International Organization for Standardization
Provided by IHS under license with ISO
No reproduction or networking permitted without license from IHS Not for Resale

A.3.4.2.1.4 Operation

Access and service provider space temperature and humidity shall provide for continuous operation of the installed active equipment. Humidifying and dehumidifying equipment may be required depending upon local environmental conditions.

A.3.4.2.1.5 Positive pressure

A positive pressure differential with respect to surrounding areas should be provided.

A.3.4.2.2 Batteries

If batteries are used for backup power, adequate ventilation shall be provided.

A.3.4.2.3 Vibration

Mechanical vibration coupled to equipment or the cabling infrastructure can lead to service failures over time. A common example of this type of failure would be loosened connections. Potential vibration within the building will exist and will be conveyed to the access and service provider spaces via the building structure. In these cases, a relevant specialist should be consulted to design in safeguards against excessive access provider space and service provider space vibration.

A.3.4.2.4 Other mechanical fixtures

Mechanical (e.g., piping, ductwork, pneumatic tubing, etc.) fixtures not related to the support of the access provider space and service provider space should not be installed in, pass through, or enter the access provider space or service provider space.

A.3.4.3 Electrical considerations

A.3.4.3.1 Power

Access provider and service provider power requirements shall be specified by the respective provider. As a minimum guideline, provide at least two dedicated non-switched electrical power outlets for equipment to be placed in each access provider space and service provider space. Operators of access provider spaces and service provider spaces shall be allowed access to convenience power outlet(s).

A.3.4.3.2 Standby power

If a standby power source is available in the building, consideration should be given to also connecting the electrical system serving the telecommunications access provider space and service provider space to the standby supply.

A.3.4.4 Water infiltration

Where possible, the access provider and service provider spaces should not be located below water level unless preventive measures against water infiltration are employed. The space should be free of water or drain pipes not directly required in support of the equipment within the space. A floor drain shall be provided within the space where risk of water ingress exists.

A.4 Common equipment room

A.4.1 General

A common equipment room (CER) should contain only those facilities that serve multiple tenants in a building. Tenant premises equipment shall not be located in a CER.

--`,,```,,,,````-`-`,,`,,`,`,,`---
Copyright International Organization for Standardization
Provided by IHS under license with ISO
No reproduction or networking permitted without license from IHS Not for Resale

It may be appropriate to employ more than one CER in a building, as in the case of buildings that exceed 10 floors, and in buildings that are served by both wireline and wireless access providers and service providers.

Access to the CER shall be controlled by the primary or secondary responsible organization.

A.4.2 Location

Efficiencies can be gained through establishment of space to support functions of access providers, service providers and CER in one contiguous space. The CER location should be selected so that the room may be expanded. The CER shall be located as close as practicable to the location where the vertical backbone pathways rise throughout the building to the common telecommunications rooms (CTRs), thereby reducing the length of the associated pathways. The CER should be accessible through common-use corridors that will allow the delivery of large cable reels.

A.4.3 Pathways

Adequate pathways should be provided between access provider spaces and the CER, and between service provider spaces and the CER. Adequate pathways should also be provided from the CER to any CTRs and from the CER to equipment rooms as appropriate (e.g., where bypass is contemplated. Common backbone pathways typically include cable tray, sleeves and conduit.

A.4.4 Design

A.4.4.1 Architectural considerations

A.4.4.1.1 Size

Buildings with gross area of 50 000 m^2 or less should allocate 12 m^2 of floor space for the CER. Preference should be given to efficient use of any available wall space. Buildings with gross area greater than 50 000 m^2 should adjust the CER area upward in increments of 1 m^2 for every increase of 10 000 m^2 in gross building area and rack mounted equipment should then be considered. The room width shall not be less than 2,2 m internal dimension. For additional considerations, see recommendation in B.1.2.

A.4.4.1.2 Mounting of equipment

Adequate provision shall be made for mounting of equipment.

A.4.4.1.3 Ceiling height

The height between the finished floor and the lowest point of the ceiling shall be a minimum of 2,2 m. For additional considerations, see recommendation in B.1.1.

A.4.4.1.4 Treatment

Floors, walls and ceiling should be treated to eliminate dust. Finishes should be light in colour to enhance room lighting. Consideration should be given to application of floor covering comprised of anti-static material.

--`,,```,,,,````-`-`,,`,,`,`,,`---
Copyright International Organization for Standardization
Provided by IHS under license with ISO
No reproduction or networking permitted without license from IHS Not for Resale

A.4.4.1.5 Lighting

Lighting shall be a minimum of 500 lx measured 1 m above the finished floor, mounted 2,2 m minimum above the finished floor. For additional considerations, see recommendation in B.1.3.

NOTE - Lighting fixtures should not be powered from the same electrical distribution panel as the telecommunications equipment in the CER. Dimmer switches should not be used and emergency lighting and signs should be properly placed such that an absence of primary lighting will not hamper emergency exits.

A.4.4.1.6 Suspended ceiling

A suspended ceiling should not be provided within the CER. In such cases where fireproofing may be sprayed onto the exposed ceiling, the fireproofing should be treated to mitigate airborne dust.

A.4.4.1.7 Door

Doors shall be a minimum of 0,65 m wide and 1,8 m high, without doorsill, hinged to open outward or slide side-to-side or be removable. The door shall be fitted with a lock. Consideration should be given to using double doors with a removable centre-post. For additional considerations, see recommendation in B.1.4.

A.4.4.1.8 Floor loading

The CER shall be located on floor areas designed with an appropriate floor loading. Concentrated floor loads frequently reach and exceed 5,75 kPa, and floor-loading capacity shall be designed accordingly. A relevant specialist shall verify that concentrations of proposed equipment do not exceed the floor-loading limit.

A.4.4.1.9 Signage

Signage, if used, should be developed within the security plan of the building.

A.4.4.1.10 Seismic considerations

In areas with significant risk of seismic activity, installation practices shall ensure continuity of telecommunications services under seismic stresses.

A.4.4.2 Environmental considerations

A.4.4.2.1 Heating, ventilation and air conditioning (HVAC)

CER temperature and humidity shall provide for continuous operation of the installed active equipment. Actual air handling requirements shall be calculated based on potential heating and cooling demand associated with equipment which may be present in the CER, including, but not limited to

- servers,
- backbone data switches,
- PBXs and key systems,
- coaxial amplifiers,
- video distribution equipment and
- uninterruptible power supplies.

A.4.4.2.1.1 Continuous operation

If deployed, HVAC shall be available on a 24 hours-per-day, 365 days-per-year basis. A stand-alone unit should be considered for the CER.

Copyright International Organization for Standardization
Provided by IHS under license with ISO
No reproduction or networking permitted without license from IHS Not for Resale

A.4.4.2.1.2 Standby operation

If a standby power source is available in the building, consideration should be given to also connecting the HVAC system serving the CER to the standby supply.

A.4.4.2.1.3 Operation

Where HVAC is provided to the CER, the temperature and humidity shall provide for continuous operation of the installed active equipment. Humidifying and dehumidifying equipment may be required depending upon local environmental conditions.

A.4.4.2.1.4 Positive pressure

A positive pressure differential with respect to surrounding areas should be provided.

A.4.4.2.1.5 Batteries

If batteries are used for backup, adequate ventilation shall be provided.

A.4.4.2.2 Vibration

Mechanical vibration coupled to equipment or the cabling infrastructure can lead to service failures over time. A common example of this type of failure would be loosened connections. Potential vibration within the building will exist and will be conveyed to the CER via the building structure. In these cases, a relevant specialist should be consulted to design safeguards against excessive CER vibration.

A.4.4.2.3 Other mechanical fixtures

Mechanical fixtures (e.g., piping, ductwork, pneumatic tubing) not related to the support of the CER should not be installed in, pass through or enter the CER.

A.4.4.3 Electrical considerations

A.4.4.3.1 Power

A CER shall be equipped with a minimum of four non-switched electrical convenience power outlets and four dedicated non-switched electrical power outlets for equipment power. Convenience power outlets should be placed at 1,8 m intervals around the perimeter walls. A separate supply circuit serving the CER electrical panel shall be provided.

A.4.4.3.2 Standby power

If a standby power source is available in the building, consideration should also be given to connecting the electrical system serving the CER to the standby supply.

A.4.4.4 Water infiltration

The CER shall not be located below water level unless preventive measures against water infiltration are employed. The room should be free of water or drain pipes not directly required in support of the equipment within the room. A floor drain shall be provided within the room if risk of water ingress exists.

A.5 Common telecommunications room

A.5.1 General

A common telecommunications room (CTR) should contain only those facilities that serve multiple tenants in a building. Tenant customer premises equipment shall not be located in a CTR.

Copyright International Organization for Standardization
Provided by IHS under license with ISO
No reproduction or networking permitted without license from IHS Not for Resale

Access to the CTR shall be controlled by the primary or secondary responsible organization.

A.5.2 Location

Whenever practicable, CTRs in multi-level buildings should be vertically aligned. The CTR should be located central to the area served and accessible through common-use corridors.

A.5.3 Pathways

The number and sizing of CTR penetrations should take into consideration the following requirements:

- cable infrastructures shared by multiple tenants;
- intra-building connectivity requirements;
- inter-building connectivity requirements;
- wireline access/service providers' bypass needs and
- wireless access/service providers' bypass needs.

In the event that cable infrastructures shared by multiple tenants do not meet specific tenant needs, sufficient pathway capacity should be set aside to accommodate bypass of shared infrastructures. See 5.1.2.

A.5.4 Design

A.5.4.1 Architectural considerations

A.5.4.1.1 Size and quantity

The design of the CTR shall be based upon the present and future requirements of the space to be served. A typical CTR should be sized at 6 m^2. When the area served exceeds 2 000 m^2 consideration should be given to providing more than one CTR.

A.5.4.1.2 Mounting of equipment

Adequate provision shall be made for mounting of equipment.

A.5.4.1.3 Ceiling height

The height between the finished floor and the lowest point of the ceiling shall be a minimum of 2,2 m. For additional considerations, see recommendation in B.1.1.

A.5.4.1.4 Treatment

Floors, walls and ceiling should be treated to eliminate dust. Finishes should be light in colour to enhance room lighting. Consideration should be given to floor covering composed of anti-static material.

A.5.4.1.5 Lighting

Lighting shall be a minimum of 500 lx measured 1 m above the finished floor, mounted 2,2 m minimum above the finished floor. For additional considerations, see recommendation in B.1.3.

NOTE - Lighting fixtures should not be powered from the same electrical distribution panel as the telecommunications equipment in the CTR. Dimmer switches should not be used and emergency lighting and signs should be properly placed in such a way that an absence of primary lighting will not hamper emergency exits.

A.5.4.1.6 Suspended ceilings

A suspended ceiling should not be provided within the CTR. In cases where fireproofing may be sprayed onto the exposed ceiling, the fireproofing should be treated to mitigate airborne dust.

Copyright International Organization for Standardization
Provided by IHS under license with ISO
No reproduction or networking permitted without license from IHS Not for Resale

A.5.4.1.7 Door

The door shall be a minimum of 0,65 m wide and 1,8 m high, without doorsill, hinged to open outward or slide side-to-side or be removable. The door shall be fitted with a lock. Consideration should be given to using double doors with a removable centre-post. For additional considerations, see recommendation in B.1.4.

A.5.4.1.8 Floor loading

The CTR shall be located on floor areas designed with an appropriate floor loading. Concentrated floor loads frequently reach and exceed 5,75 kPa, and floor-loading capacity shall be designed accordingly. A relevant specialist shall verify that concentrations of proposed equipment do not exceed the floor-loading limit.

A.5.4.1.9 Signage

Signage, if used, should be developed within the security plan of the building.

A.5.4.1.10 Seismic considerations

In areas with significant risk of seismic activity, installation practices shall ensure continuity of telecommunications services under seismic stresses.

A.5.4.2 Environmental considerations

A.5.4.2.1 Heating, ventilation and air conditioning (HVAC)

CTR temperature and humidity shall provide for continuous operation of the installed active equipment. Actual air handling requirements shall be calculated based on potential heating and cooling demand associated with equipment which may be present in the CTR.

A.5.4.2.1.1 Continuous operation

If deployed, HVAC shall be available on a 24 hours-per-day, 365 days-per-year basis. A stand-alone unit should be considered for the CTR.

A.5.4.2.1.2 Standby operation

If a standby power source is available in the building, consideration should be given to also connecting the HVAC system serving the CTR to the standby supply.

A.5.4.2.1.3 Operation

Where HVAC is provided to the CTR, the temperature and humidity shall provide for continuous operation of the installed active equipment. Humidifying and dehumidifying equipment may be required depending upon local environmental conditions.

A.5.4.2.1.4 Positive pressure

A positive pressure differential with respect to surrounding areas should be provided.

A.5.4.2.1.5 Batteries

If batteries are used for backup, adequate ventilation shall be provided.

--`,,```,,,,````-`-`,,`,,`,`,,`---

Copyright International Organization for Standardization
Provided by IHS under license with ISO
No reproduction or networking permitted without license from IHS Not for Resale

A.5.4.2.1.6 Vibration

Mechanical vibration coupled to equipment or the cabling infrastructure can lead to service failures over time. A common example of this type of failure would be loosened connections. Potential vibration within the building will exist and will be conveyed to the CTR via the building structure. In these cases, a relevant specialist should be consulted to design safeguards against excessive CTR vibration.

A.5.4.2.1.7 Other mechanical fixtures

Mechanical fixtures (e.g., piping, ductwork, pneumatic tubing) not related to the support of the CTR should not be installed in, pass through or enter the CTR.

A.5.4.3 Electrical considerations

A.5.4.3.1 Power

A CTR shall be equipped with a minimum of four non-switched electrical convenience power outlets and four dedicated non-switched electrical power outlets for equipment power. Convenience power outlets shall be placed at 1,8 m intervals around the perimeter walls.

NOTE - It may be desirable to install dedicated feed-through power panels to serve groupings of vertically aligned CTRs.

A.5.4.3.2 Standby power

If a standby power source is available in the building, the CTR panel should be connected to the standby supply.

A.5.4.4 Water infiltration

The CTR shall not be located below water level unless preventive measures against water infiltration are employed. The room shall be free of water or drain pipes not directly required in support of the equipment within the room. A floor drain shall be provided within the room if risk of water ingress exists.

A.6 Building and campus pathway requirements

A.6.1 Building pathways

A.6.1.1 General

The access to building pathways containing cables for multiple tenants shall be limited to the building owner/agent.

A.6.1.2 Common pathways and spaces bypass (diverse cable routing)

Common pathways and spaces bypass occurs when the tenant’s requirements exceed the common use pathways or spaces of a building. An example of this bypass is when a tenant wants to keep their cabling physically separate from the common pathways and spaces used by other tenants in the multi-tenant building. Bypass results in a capacity reduction of the building’s common pathways and spaces. Common pathways and spaces bypass may be implemented using the specifications within the main body of this standard.

A.6.2 Campus pathways

Pathways for multi-tenant buildings in a campus environment should be sized taking into account multiple wireline and wireless access providers and service providers bypass connection needs, intra-tenant connectivity needs and pathway demands associated with cable infrastructures shared by multiple tenants, with access allowance.

--`,,```,,,,````-`-`,,`,,`,`,,`---

Copyright International Organization for Standardization
Provided by IHS under license with ISO
No reproduction or networking permitted without license from IHS Not for Resale

Annex B
(informative)

Additional recommendations for multi-tenant buildings

Annex B contains design recommendations and gives an expanded version of Table A.1,.as well as design examples for Common Equipment Room and Common Telecommunications Room.

B.1 Ceiling height

To accommodate taller frames and overhead pathways, the ceiling height should be 3 m.

B.2 Size

To provide additional space for equipment installation and maintenance, the room should have an internal dimension of 3 m.

B.3 Lighting

If the ceiling height is 3 m, lighting shall be a minimum of 500 lx, measured 1 m above the finished floor, and should be mounted 2,6 m minimum above the finished floor, to ensure adequate clearances from lighting fixtures in taller rooms.

B.4 Door

Doors should be a minimum of 0,9 m wide and 2 m high. In order to accommodate typical equipment racks, the larger door size is necessary.

Copyright International Organization for Standardization
Provided by IHS under license with ISO
No reproduction or networking permitted without license from IHS Not for Resale

Table B.1 – Summary of spaces used to service a multi-tenant building

Space name	Acronym	Recommended space size	Sample functions/equipment	Primary responsible organization / secondary responsible organization
Entrance room		3 m x 3 m	Entrance, protection, transition for access provider cables	Building owner or agent
Access provider space		1,5 m x 2 m	Location for access provider transmission and support equipment	Access provider / building owner or agent
Service provider space		1,5 m x 2 m	Location for service provider transmission and support equipment	Service provider / building owner or agent
Common equipment room	CER	3 m x 4 m	- cable infrastructure pathway - wireline and wireless infrastructure demarcation point(s) - paging - fire/smoke detection and alarm - security - access - surveillance systems - building automation and control, including energy monitoring, lighting control and environmental control - area of rescue assistance equipment	Building owner or agent

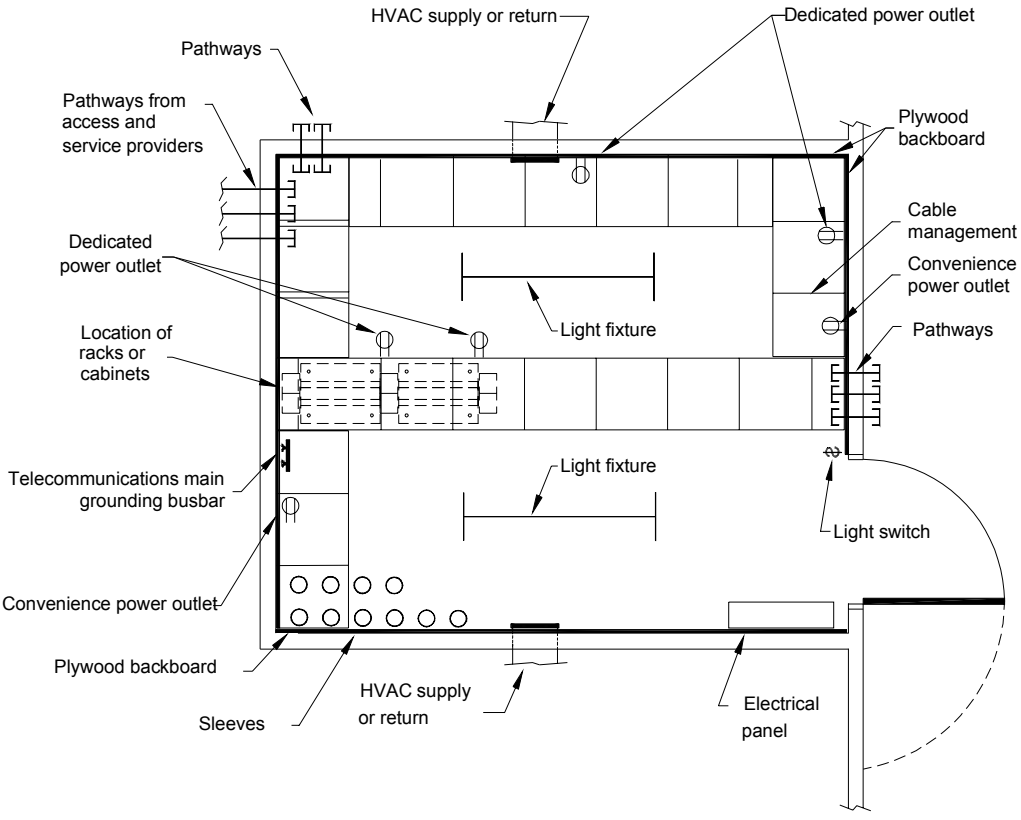

Figure B.1 – Example of a common equipment room

Copyright International Organization for Standardization
Provided by IHS under license with ISO
No reproduction or networking permitted without license from IHS
Not for Resale

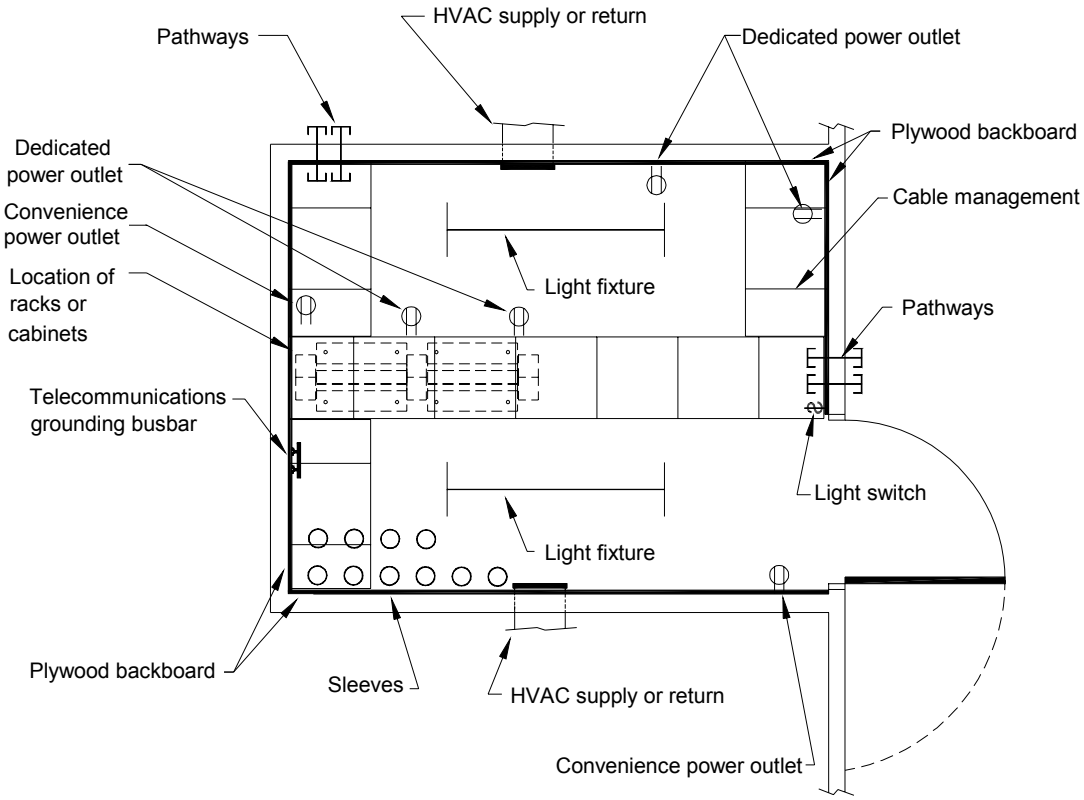

Figure B.2 – Example 1 – Common telecommunications room

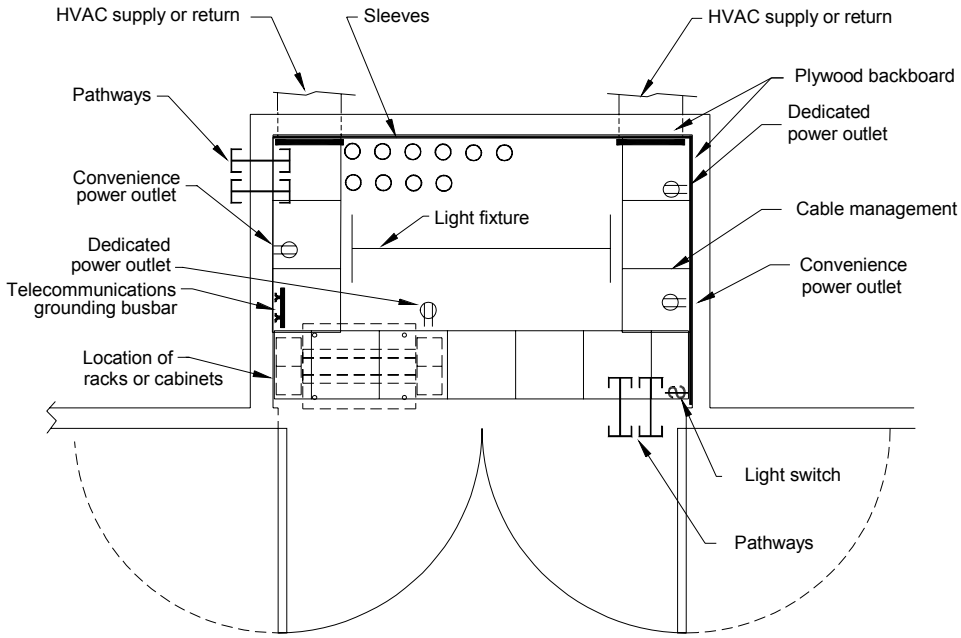

Figure B.3 – Example 2 – Common telecommunications room

--`,,```,,,,````-`-`,,`,,`,`,,`---

Copyright International Organization for Standardization
Provided by IHS under license with ISO
No reproduction or networking permitted without license from IHS
Not for Resale

Page 23

Annex D – Building entrance facility

(former Annex B)

Replace figure B.1 by the new figure D.1:

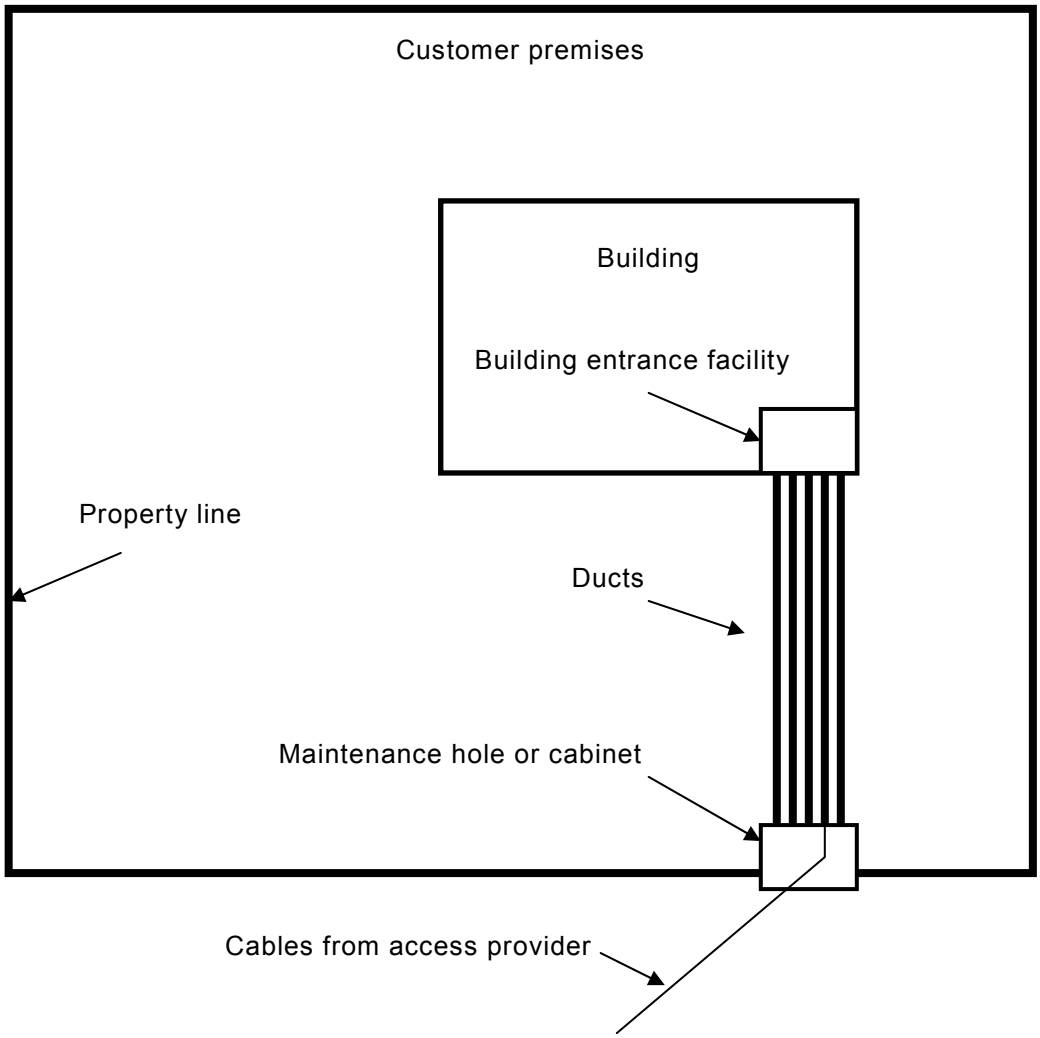

Figure D.1 - Sample of a campus entrance facility

Copyright International Organization for Standardization
Provided by IHS under license with ISO
No reproduction or networking permitted without license from IHS
Not for Resale

Copyright International Organization for Standardization
Provided by IHS under license with ISO
No reproduction or networking permitted without license from IHS
Not for Resale

ISBN 2-8318-8405-5



ICS 35.200

Typeset and printed by the IEC Central Office
GENEVA, SWITZERLAND

Copyright International Organization for Standardization
Provided by IHS under license with ISO
No reproduction or networking permitted without license from IHS

Not for Resale