INTERNATIONAL STANDARD

ISO/IEC 17913

First edition
2000-06-15

Information technology — 12,7 mm 128-track magnetic tape cartridge for information interchange — Parallel serpentine format

Technologies de l'information — Cartouches de bande magnétique de 12,7 mm*, 128 pistes pour l'échange d'information — Format serpentant parallèle*

Reference number
ISO/IEC 17913:2000(E)

© ISO/IEC 2000

Copyright International Organization for Standardization
Provided by IHS under license with ISO
No reproduction or networking permitted without license from IHS

Not for Resale

PDF disclaimer

This PDF file may contain embedded typefaces. In accordance with Adobe's licensing policy, this file may be printed or viewed but shall not be edited unless the typefaces which are embedded are licensed to and installed on the computer performing the editing. In downloading this file, parties accept therein the responsibility of not infringing Adobe's licensing policy. The ISO Central Secretariat accepts no liability in this area.

Adobe is a trademark of Adobe Systems Incorporated.

Details of the software products used to create this PDF file can be found in the General Info relative to the file; the PDF-creation parameters were optimized for printing. Every care has been taken to ensure that the file is suitable for use by ISO member bodies. In the unlikely event that a problem relating to it is found, please inform the Central Secretariat at the address given below.

© ISO/IEC 2000

All rights reserved. Unless otherwise specified, no part of this publication may be reproduced or utilized in any form or by any means, electronic or mechanical, including photocopying and microfilm, without permission in writing from either ISO at the address below or ISO's member body in the country of the requester.

ISO copyright office
Case postale 56 • CH-1211 Geneva 20
Tel. + 41 22 749 01 11
Fax + 41 22 734 10 79
E-mail copyright@iso.ch
Web www.iso.ch

Printed in Switzerland

© ISO/IEC 2000 – All rights reserved

Copyright International Organization for Standardization
Provided by IHS under license with ISO
No reproduction or networking permitted without license from IHS

Not for Resale

Contents

Page

Section 1 - General **1**

1 Scope **1**

2 Conformance **1**

2.1 Magnetic tape cartridge **1**
2.2 Generating system **1**
2.3 Receiving system **1**

3 Normative references **1**

4 Definitions **1**

4.1 algorithm **1**
4.2 anhysteretic erase **1**
4.3 average signal amplitude **2**
4.4 azimuth **2**
4.5 back surface **2**
4.6 beginning of partition (BOP) **2**
4.7 beginning of tape (BOT) **2**
4.8 cartridge **2**
4.9 cyclic redundancy check (CRC) character **2**
4.10 end of tape (EOT) **2**
4.11 error-correcting code (ECC) **2**
4.12 error-detecting code (EDC) **2**
4.13 File Mark **2**
4.14 flux transition position **2**
4.15 flux transition spacing **2**
4.16 half-wrap **2**
4.17 logical block **2**
4.18 logical forward **2**
4.19 logical reverse **2**
4.20 magnetic tape **2**
4.21 mark tach count **2**
4.22 Master Standard Reference Tape **2**
4.23 physical recording density **2**
4.24 pre-record condition **2**
4.25 recorded element **2**
4.26 Reference Field **2**
4.27 resync character **2**
4.28 SDM set **2**
4.29 Secondary Standard Reference Tape (SSRT) **2**
4.30 servo track **3**
4.31 Standard Reference Amplitude (SRA) **3**
4.32 Standard Reference Current (I_r) **3**
4.33 Test Recording Current (I_m) **3**
4.34 track **3**
4.35 track group **3**
4.36 trailer **3**
4.37 Typical Field **3**
4.38 write equalisation **3**

© ISO/IEC 2000 – All rights reserved

Copyright International Organization for Standardization
Provided by IHS under license with ISO
No reproduction or networking permitted without license from IHS
Not for Resale

5 Conventions and notations **3**

5.1 Representation of numbers **3**
5.2 Dimensions **3**
5.3 Names **3**
5.4 Acronyms **3**

6 Environment and safety **4**

6.1 Cartridge and tape testing environment **4**
6.2 Cartridge operating environment **4**
6.3 Cartridge storage environment **4**
6.4 Safety **5**

6.4.1 Safeness **5**
6.4.2 Flammability **5**

6.5 Transportation **5**

Section 2 - Requirements for the unrecorded tape **5**

7 Mechanical and electrical requirements **5**

7.1 Material **5**
7.2 Tape length **5**
7.3 Width **5**
7.4 Total thickness **5**
7.5 Base material thickness **5**
7.6 Discontinuity **5**
7.7 Longitudinal curvature **5**

7.7.1 Requirement **5**
7.7.2 Procedure **5**

7.8 Out-of-Plane distortions **5**
7.9 Cupping **6**

7.9.1 Requirement **6**
7.9.2 Procedure **6**

7.10 Coefficient of dynamic friction **6**

7.10.1 Requirements **6**
7.10.2 Procedure **6**

7.11 Coating adhesion **7**
7.12 Layer-to-layer adhesion **7**

7.12.1 Requirements **7**
7.12.2 Procedure **7**

7.13 Electrical resistance **8**

7.13.1 Requirement **8**
7.13.2 Procedure **8**

7.14 Abrasivity **9**
7.15 Friction characteristics after stress **9**

7.15.1 Requirements **9**
7.15.2 Procedure **9**

7.16 Surface roughness **9**

7.16.1 Requirement **9**
7.16.2 Procedure **9**

7.17 Inhibitor tape **10**

© ISO/IEC 2000 – All rights reserved
Copyright International Organization for Standardization
Provided by IHS under license with ISO
No reproduction or networking permitted without license from IHS
Not for Resale

8 Magnetic recording characteristics **10**

8.1 Typical Field **10**
8.2 Signal amplitude **10**
8.3 Resolution **10**
8.4 Broad-band signal-to-noise ratio (BBSNR) **10**
8.4.1 Requirement **10**
8.4.2 Procedure **10**

9 Tape quality **11**

9.1 Missing pulse **11**

9.1.1 Requirement **11**
9.1.2 Procedure **11**

9.2 Coincident missing pulse **11**

9.2.1 Requirement **11**
9.2.2 Procedure **11**

9.3 Missing pulse density **12**

9.3.1 Requirement **12**
9.3.2 Procedure **12**

9.4 Tape durability **12**

Section 3 - Mechanical specifications of the tape cartridge **12**

10 General **12**

10.1 Overall dimensions **13**
10.2 Write-inhibit mechanism **13**
10.3 Label areas of the rear side **13**
10.4 Label area on the top side **14**
10.5 Case opening **14**
10.6 Locating notches **14**
10.7 Locating areas **15**
10.8 Inside configuration of the case around the case opening **15**
10.9 Other external dimensions of the case **15**
10.10 Central window **15**
10.11 Stacking ribs **16**
10.12 Recessed area **16**
10.13 Flexibility of the case **16**

10.13.1 Requirements **16**
10.13.2 Procedure **17**

10.14 Tape reel **17**

10.14.1 Locking mechanism **17**
10.14.2 Axis of rotation of the reel **17**
10.14.3 Metallic insert **17**
10.14.4 Toothed rim **17**
10.14.5 Hub of the reel **18**
10.14.6 Relative positions **18**
10.14.7 Characteristics of the toothed rim **19**

10.15 Leader block **19**
10.16 Attachment of the tape to the leader block **20**
10.17 Latching mechanism **20**
10.18 Tape wind **20**
10.19 Wind tension **20**
10.20 Circumference of the tape reel **20**
10.21 Moment of inertia **21**
10.22 Material **21**

© ISO/IEC 2000 – All rights reserved

Copyright International Organization for Standardization
Provided by IHS under license with ISO
No reproduction or networking permitted without license from IHS
Not for Resale

10.23 Cartridge identification notches **21**
10.24 Finger slot **21**

Section 4 - Requirements for an interchanged tape **31**

11 Method of recording **31**

11.1 Physical recording density **31**
11.2 Bit cell length **31**
11.3 Average bit cell length **31**

11.3.1 Long-term average RLL bit cell length **31**
11.3.2 Short-term average RLL bit cell length **31**
11.4 Rate of change of the short-term average RLL bit cell length **31**
11.5 Bit shift **31**
11.6 Total character skew **31**
11.7 Missing zero-crossing zones **32**
11.8 Coincident missing zero-crossing zones **32**

12 Servo tracks **32**

12.1 Locations of the servo tracks **32**
12.2 Physical width of the servo tracks **33**
12.3 Format of the servo tracks **33**
12.4 Servo requirements **34**

12.4.1 Servo amplitude **34**
12.4.2 Servo azimuth **34**
12.4.3 Servo errors **34**
12.4.4 Servo edge spacing **35**

12.5 Procedure **35**

13 Data track format **35**

13.1 Number of data tracks **35**
13.2 Track positions **35**
13.3 Track width **37**
13.4 Data azimuth **37**
13.5 Half-wraps **37**

14 Tape format **37**

14.1 General **37**
14.2 Recording area **37**
14.3 Tach count **39**
14.4 Physical blocks **39**
14.5 Servo acquisition region **40**
14.6 Volume control region **40**
14.7 Data region **40**
14.8 Data entities **40**

15 Packet format **42**

15.1 Packet header **43**
15.2 Packet data **45**
15.3 Packet trailer **45**

16 Device blocks **45**

16.1 Data device blocks **45**
16.2 Mark device blocks **45**
16.3 File Mark **45**
16.4 Void mark **46**
16.5 Beginning of half-wrap mark **46**
16.6 End of half-wrap mark **46**
16.7 BOP mark **46**

© ISO/IEC 2000 – All rights reserved
Copyright International Organization for Standardization
Provided by IHS under license with ISO
No reproduction or networking permitted without license from IHS
Not for Resale

16.8 EOD mark **46**
16.9 SDM mark **46**
16.10 FID mark **47**
16.11 DBM mark **48**

16.11.1 DBM general information packet **48**
16.11.2 DBM wrap region packet **49**
16.11.3 DBM partitions packet **49**
16.11.4 DBM servo demark packet **50**
16.11.5 DBM File Mark packet **50**

16.12 SARS mark **51**
16.13 DBM checked out mark **51**
16.14 DBM valid mark **51**

17 Device block format **51**

17.1 Device block header **51**

17.1.1 Device block control **52**
17.1.2 Device block sequence control **54**
17.1.3 Vendor identification code **54**

17.2 Device block data **54**
17.3 Device block trailer **54**

18 ECC **54**

18.1 CRC **54**
18.2 Code block **55**
18.3 ECC encoded code block **55**
18.4 Codeword correction code generation **56**
18.5 MIE pointer code generation **57**
18.6 ECC encoded interleave unit **57**
18.7 Short error correction code generation **57**

19 Recording of bytes on tape **59**

19.1 Synchronisation format **59**
19.2 Interblock gap formatting **62**
19.3 RLL byte translation **63**
19.4 Write equalisation bit translation **63**
19.5 Writing bits on tape **63**

Annexes

A - Tape abrasivity measurement procedure **64**

B - Media type label **66**

C - Measurement of bit shift **70**

D - Vendor Identification Code **72**

E - Recommendations for transportation **73**

F - Inhibitor tape **74**

G - Tape durability **75**

© ISO/IEC 2000 – All rights reserved

Copyright International Organization for Standardization
Provided by IHS under license with ISO
No reproduction or networking permitted without license from IHS
Not for Resale

Foreword

ISO (the International Organization for Standardization) and IEC (the International Electrotechnical Commission) form the specialized system for worldwide standardization. National bodies that are members of ISO or IEC participate in the development of International Standards through technical committees established by the respective organization to deal with particular fields of technical activity. ISO and IEC technical committees collaborate in fields of mutual interest. Other international organizations, governmental and non-governmental, in liaison with ISO and IEC, also take part in the work.

International Standards are drafted in accordance with the rules given in the ISO/IEC Directives, Part 3.

In the field of information technology, ISO and IEC have established a joint technical committee, ISO/IEC JTC 1. Draft International Standards adopted by the joint technical committee are circulated to national bodies for voting. Publication as an International Standard requires approval by at least 75 % of the national bodies casting a vote.

Attention is drawn to the possibility that some of the elements of this International Standard may be the subject of patent rights. ISO and IEC shall not be held responsible for identifying any or all such patent rights.

International Standard ISO/IEC 117913 was prepared by ECMA (as ECMA-278) and was adopted, under a special “fast-track procedure”, by Joint Technical Committee ISO/IEC JTC 1, *Information technology*, in parallel with its approval by national bodies of ISO and IEC.

Annexes A, B, C and D form a normative part of this International Standard. Annexes E to G are for information only.

--`,,```,,,,````-`-`,,`,,`,`,,`---

© ISO/IEC 2000 – All rights reserved
Copyright International Organization for Standardization
Provided by IHS under license with ISO
No reproduction or networking permitted without license from IHS
Not for Resale

Information technology — 12,7 mm 128-track magnetic tape cartridge for information interchange — Parallel serpentine format

Section 1 - General

1 Scope

This International Standard specifies the physical and magnetic characteristics of a magnetic tape cartridge, using a magnetic tape 12,7 mm wide, so as to provide physical interchange of such cartridges between drives. It also specifies the quality of the recorded signals, the recording method and the recorded format known as Parallel Serpentine, thereby allowing data interchange between drives by means of such cartridges. The format supports variable length Logical Records, high speed search, and the use of the algorithm for data compression specified in International Standard ISO/IEC 15200.

Information interchange between systems also requires, at a minimum, agreement between the interchange parties upon the interchange code(s) and the specification of the structure and labelling of the information on the interchanged cartridge.

Together with a standard for volume and file structure, e.g. International Standard ISO 1001, this International Standard provides for full data interchange between data processing systems.

2 Conformance

2.1 Magnetic tape cartridge

A tape cartridge shall be in conformance with this International Standard if it meets all the mandatory requirements specified herein. The tape requirements shall be satisfied throughout the extent of the tape.

2.2 Generating system

A generating system shall be in conformance with this International Standard if it generates a tape according to 2.1.

2.3 Receiving system

A receiving system shall be in conformance with this International Standard if it can read all tapes according to 2.1.

3 Normative references

The following normative documents contain provisions which, through reference in this text, constitute provisions of this International Standard. For dated references, subsequent amendments to, or revisions of, any of these publications do not apply. However, parties to agreements based on this International Standard are encouraged to investigate the possibility of applying the most recent editions of the normative documents indicated below. For undated references, the latest edition of the normative document referred to applies. Members of ISO and IEC maintain registers of currently valid International Standards.

ISO 1001: 1986, *Information processing — File structure and labelling of magnetic tapes for information interchange*.

IEC 60950:1999, *Safety of information technology equipment.*

ISO/IEC 15200:1996, *Information technology— Adaptive Lossless Data Compression algorithm (ALDC).*

ISO/R 527:1966, *Plastics — Determination of tensile properties.*

ISO/IEC 646:1991, *Information technology — ISO 7-bit coded character set for information interchange.*

ISO 683-13:1986, *Heat-treatable steels, alloy steels and free-cutting steels — Part 13: Wrought stainless steels.*

ANSI MH10.8M-1993, *Materials Handling — Unit Loads and Transport Packages — Bar Code Symbols*.

4 Terms and definitions

For the purposes of this International Standard, the following terms and definitions apply.

4.1 algorithm: A set of rules for transforming the logical representation of data.

4.2 anhysteretic erase: A process of erasure utilising an alternating magnetic field of decaying level.

--`,,```,,,,````-`-`,,`,,`,`,,`---
© ISO/IEC 2000 – All rights reserved

Copyright International Organization for Standardization
Provided by IHS under license with ISO
No reproduction or networking permitted without license from IHS
Not for Resale

4.3 **average signal amplitude:** The average peak-to-peak value of the signal output measured over a minimum of 25,4 mm, exclusive of missing pulses.

4.4 **azimuth:** The angle, in minutes of arc, of the mean flux transition line of a track from a line normal to the tape Reference Edge.

4.5 **back surface:** The surface of the tape opposite the recording surface.

4.6 **beginning of partition (BOP):** The point along the length of the tape where recording in any partition begins.

4.7 **beginning of tape (BOT):** The point along the length of the magnetic tape, indicated by the start of recorded information.

4.8 **cartridge:** A container holding a single supply reel of magnetic tape with an attached leader block at the BOT end.

4.9 **cyclic redundancy check (CRC) character:** A four-byte character used for error detection.

4.10 **end of tape (EOT):** The point on a track farthest from BOT up to which recording is allowed.

4.11 **error-correcting code (ECC):** An algorithm yielding bytes used for error detection and correction.

4.12 **error-detecting code (EDC):** An algorithm yielding bytes used for error detection.

4.13 **File Mark:** A recorded element requested by a host that marks the end of a host data file or aggregate.

4.14 **flux transition position:** The point on the magnetic tape that exhibits the maximum free-space flux density normal to the tape surface.

4.15 **flux transition spacing:** The distance along a track between successive flux transitions.

4.16 **half-wrap:** A track group recorded in the physical forward or physical reverse direction.

4.17 **logical block:** User data or a File Mark that is received as input by the system or that is sent as output from the system.

4.18 **logical forward:** The direction of tape motion that results in finding an ascending order of device block identifiers.

4.19 **logical reverse:** The direction of tape motion that results in finding a descending order of device block identifiers.

4.20 **magnetic tape:** A tape that accepts and retains magnetic signals intended for input, output, and storage of data for information processing.

4.21 **mark tach count:** The value of the tach counter that exists at the starting point of an Interblock Gap prior to the first device block of a mark.

4.22 **Master Standard Reference Tape:** A tape selected as the standard for Reference Field, signal amplitude, resolution, and broad-band signal-to-noise ratio.

Note - A Master Standard Reference Tape has been established at Imation Corporation.

4.23 **physical recording density:** The number of recorded flux transitions per unit length of track expressed in flux transitions per millimetre (ftpmm).

4.24 **pre-record condition:** The condition of the magnetic tape in preparation for data recording that has been anhysteretically erased and subsequently servo written.

4.25 **recorded element:** A File Mark or a logical block.

4.26 **Reference Field:** The Typical Field of the Master Standard Reference Tape.

4.27 **resync character:** A control character identifying format resynchronisation points in a track. It is intended that read-back circuits be capable of resynchronising operations when such characters are sensed.

4.28 **SDM set:** The group of SDM marks delineated by the beginning and end SDM marks, containing any number of included middle SDM marks including zero middle SDM marks.

4.29 **Secondary Standard Reference Tape (SSRT):** A tape, the performance of which is known and stated in relation to that of the Master Standard Reference Tape.

Note - Secondary Standard Reference Tapes can be ordered from the Imation Corporation, 1 Imation Place, Oakdale, MN 55128-3414 under Part Number 84-9802-4185-9. In principle such tapes will be available for a period of 10 years from the publication of

© ISO/IEC 2000 – All rights reserved
Copyright International Organization for Standardization
Provided by IHS under license with ISO
No reproduction or networking permitted without license from IHS
Not for Resale

this International Standard. However, by agreement between ECMA and Imation Corporation, this period may be shortened or extended to take account of demands for such SSRTs.

It is intended that these SSRTs be used for calibrating tertiary reference tapes for use in routine calibration.

4.30 servo track: A pre-recorded non-data track that is used by the drive to locate the data recording head at precise locations for recording data.

4.31 Standard Reference Amplitude (SRA): The average signal amplitude from the Master Standard Reference Tape when it is recorded with the Test Recording Current at 2 550 ftpmm. Traceability to the Standard Reference Amplitude is provided by the calibration factors supplied with each Secondary Standard Reference Tape.

4.32 Standard Reference Current (I_r): The current that produces the Reference Field.

4.33 Test Recording Current (I_m): A current whose value is 1,5 times the Standard Reference Current (I_m = 1,5 x I_r).

4.34 track: A longitudinal area on the tape along which a series of magnetic signals can be recorded.

4.35 track group: The set of tracks recorded simultaneously.

4.36 trailer: Data appended to a data entity to provide identification and checking.

4.37 Typical Field: The minimum recording field which, when applied to a magnetic tape, will cause an average signal amplitude equal to 85 % of the maximum average signal amplitude at 2 550 ftpmm recording density.

4.38 write equalisation: An algorithm that linearly transforms an input binary sequence into another binary sequence.

5 Conventions and notations

5.1 Representation of numbers

The following conventions and notations apply in this International Standard, unless otherwise stated.

— A measured value is rounded off to the least significant digit of the corresponding specified value. It implies that a specified value of 1,26 with a positive tolerance +0,01, and a negative tolerance -0,02 allows a range of measured values from 1,235 to 1,275.

— In each block and in each field the bytes shall be arranged with Byte 0, the most significant, first. Within each byte the bits shall be arranged with Bit 0, the most significant, first and Bit 7, the least significant bit, last. This order applies to the data, and to the input and output of the error-detecting and error-correcting codes, and to the cyclic redundancy characters.

— Letters and digits in parentheses represent numbers in hexadecimal notation.

— The setting of bits is denoted by ZERO or ONE.

— Numbers in binary notation and bit patterns are represented by strings of digits 0 and 1 shown with the most significant bit to the left.

5.2 Dimensions

The dimensions in figures 1 to 3 are nominal dimensions. Unless otherwise stated, the dimensions in figures 4 to 21 are in millimetres with a tolerance of ± 50 mm.

5.3 Names

The names of basic elements, e.g. specific fields, are written with a capital initial letter.

5.4 Acronyms

BOP	Beginning of Partition
BOT	Beginning of Tape
BOW	Beginning of half-Wrap mark
BVCR	Beginning of Volume Control Region
CRC	Cyclic Redundancy Check character
DBM	Device Block Map
ECC	Error-Correcting Code
EDC	Error-Detecting Code

--`,,```,,,,````-`-`,,`,,`,`,,`---

© ISO/IEC 2000 – All rights reserved

Copyright International Organization for Standardization
Provided by IHS under license with ISO
No reproduction or networking permitted without license from IHS
Not for Resale

EEIU	ECC encoded interleave unit
ELEOP	Early Logical End of Partition
EOD	End of Data mark
EOP	End of Partition
EOT	End of Tape
EOV	End of Volume
EOW	End of half-Wrap mark
EVCR	End of Volume Control Region
FID	Format Identification
IBG	Interblock Gap
LEOP	Logical End of Partition
LP1	Logical Point 1
LP2	Logical Point 2
LP3	Logical Point 3
MIE	Minimum Interleave Element
MIU	Minimum Interleave Unit
MSRT	Master Standard Reference Tape
RLL	Run Length Limited
SAQ	Servo Acquisition Region
SARS	Statistical Analysis and Reporting
SDM	Servo Demark
SECC	Short Error Correction Code
SRA	Standard Reference Amplitude
SSRT	Secondary Standard Reference Tape
VCR	Volume Control Region

6 Environment and safety

Unless otherwise stated, the conditions specified below refer to the ambient conditions in the test or computer room and not to those within the tape drive.

6.1 Cartridge and tape testing environment.

Unless otherwise stated, tests and measurements made on the cartridge and tape to check the requirements of this International Standard shall be carried out under the following conditions:

— temperature: 23 °C ± 2 °C
— relative humidity: 40 % to 60 %
— conditioning before testing: 24 h min.

6.2 Cartridge operating environment

Cartridges used for data interchange shall be capable of operating under the following conditions:

— temperature: 16 °C to 32 °C
— relative humidity: 20 % to 80 %
— wet bulb temperature: 26 °C max.

Note - Localised tape temperatures in excess of 48 °C may cause tape damage.

If during storage and/or transportation a cartridge has been exposed to conditions outside the above values, it shall be conditioned before use by exposure to the operating environment for a time equal to, or greater than, the time away from the operating environment up to a maximum of 24 h. There shall be no deposit of moisture on or in the cartridge.

6.3 Cartridge storage environment

Cartridges shall be stored under the following conditions:

— temperature: 5 °C to 32 °C
— relative humidity: 5 % to 80 %
— wet bulb temperature: 26 °C max.

The stray magnetic field at any point on the tape shall not exceed 4 000 A/m. There shall be no deposit of moisture on or in the cartridge.

--`,,```,,,,````-`-`,,`,,`,`,,`---

© ISO/IEC 2000 – All rights reserved
Copyright International Organization for Standardization
Provided by IHS under license with ISO
No reproduction or networking permitted without license from IHS
Not for Resale

6.4 Safety

6.4.1 Safeness

The cartridge and its components shall not constitute any safety or health hazard when used in the intended manner, or through any foreseeable misuse in an information processing system.

6.4.2 Flammability

The cartridge and its components shall be made from materials which, if ignited from a match flame, and when so ignited do not continue to burn in a still carbon dioxide atmosphere.

6.5 Transportation

This International Standard does not specify parameters for the environment in which cartridges should be transported. Annex E gives some recommendations for transportation.

Section 2 - Requirements for the unrecorded tape

7 Mechanical and electrical requirements

7.1 Material

The tape shall consist of a base material (oriented polyethylene terephthalate film or its equivalent) coated on one surface with a strong yet flexible layer of ferromagnetic material dispersed in a suitable binder. The other surface of the tape may be coated to enhance electrical conduction, tape handling and mechanical properties.

7.2 Tape length

The length of the tape shall be 320 m ± 5 m.

7.3 Width

The width of the tape shall be 12,650 mm ± 0,025 mm.

The width shall be measured across the tape from edge to edge when the tape is under a tension of less than 0,28 N.

7.4 Total thickness

The total thickness of the magnetic tape at any point shall be 17,0 µm ± 1,0 µm.

7.5 Base material thickness

The thickness of the base material shall be 14,2 µm ± 0,7 µm.

7.6 Discontinuity

There shall be no discontinuities in the tape such as those produced by tape splicing or perforations.

7.7 Longitudinal curvature

The longitudinal curvature is measured as the departure of the Reference Edge of the tape from a straight line along the longitudinal dimension of the tape in the plane of the tape surface.

7.7.1 Requirement

The radius of curvature of the edge of the tape shall be greater than 33,75 m.

7.7.2 Procedure

Allow a 1 m length of tape to unroll and measure its natural curvature on a flat, smooth surface. Measure the deviation from a 1 m chord. The deviation shall not be greater than 3,0 mm within a span of 900 mm. This corresponds to the minimum radius of curvature of 33,75 m when measured over an arc of circle.

7.8 Out-of-Plane distortions

Out-of-plane distortions are local deformations which cause portions of the tape to deviate from the plane of the surface of the tape. Out-of-plane distortions are most readily observed when the tape is lying on a flat surface under no tension.

There shall be no visual evidence of out-of-plane distortion when the tape is subjected to a uniform tension of 0,4 N.

© ISO/IEC 2000 – All rights reserved

Copyright International Organization for Standardization
Provided by IHS under license with ISO
No reproduction or networking permitted without license from IHS
Not for Resale

7.9 Cupping

Cupping is the departure across the width of the tape (transverse to motion) from a flat surface.

7.9.1 Requirement

There shall be no cupping toward the recording surface of the tape. Cupping away from the recording surface shall be 0,4 mm max.

7.9.2 Procedure

i. Cut a tape sample at least 1,0 m in length.

ii. Condition the sample by hanging it so that the coated surface is freely exposed to the test environment for a minimum of 3 h.

iii. From the centre portion of the tape, cut a sample 0,5 m ± 0,1 m in length.

iv. Install the tape sample on a fixture that uses a clamping bar to hold one end of the sample and a 3,5 g tensioning weight to pull the other end of the tape sample across a roller. There shall be a minimum distance of 200 mm between the roller and the clam.

v. Place the fixture on a 40X microscope stage so that the centre of the fixture is under the microscope. Adjust the microscope to focus on the first edge of the tape, and record the vertical positioning of the focusing adjustment. The microscope focusing adjustment shall be known to 1 µm.

vi. While positioning the tape laterally under the microscope, use the focusing adjustment to find the point of maximum departure of the tape surface from the reference edge height. Note the vertical height and determine the difference between the first reference of step v and the departed surface height.

vii. Move the tape under the microscope to view the other reference edge. Adjust the microscope focus and note the focused vertical scope position.

viii. Calculate cupping as the average of the height departures from the two reference edges determined in steps vi and vii. No individual measurement shall exceed the allowed maximum.

7.10 Coefficient of dynamic friction

The dynamic friction between the recording surface and the back surface is the resistance to motion between the recording surface and the back surface of the tape.

7.10.1 Requirements

The coefficient of dynamic friction between the magnetic surface and the back surface shall be greater than 0,28.

7.10.2 Procedure

i. Wrap a first piece of tape around a cylinder of diameter 25,4 mm and wrap it with a total wrap angle of more than 90 ° with the back surface outwards.

ii. Wrap a second test piece, with the magnetic surface inwards, around the first test piece with a total wrap angle of 90 °.

iii. Exert on one end of the outer test piece a force of F_1 = 0,64 N.

iv. Attach the other end to a force gauge mounted on a linear slide.

v. Drive the slide at a speed of 1 mm/s, measure the force F_2 required.

vi. Calculate the coefficient of dynamic friction γ from the equation

$$\gamma = \frac{1}{\phi} \times \ln\left(\frac{F_2}{F_1}\right)$$

where ϕ is the value of the wrap angle in radians.

© ISO/IEC 2000 – All rights reserved
Copyright International Organization for Standardization
Provided by IHS under license with ISO
No reproduction or networking permitted without license from IHS
Not for Resale

7.11 Coating adhesion

The force required to peel any part of the coating from the tape base material shall not be less than 0,44 N.

Procedure

i. Take a test piece of the tape approximately 380 mm long and scribe a line through the recording coating across the width of the tape 125 mm from one end.

ii. Using a double-sided pressure sensitive tape, attach the full width of the test piece to a smooth metal plate, with the magnetic coating (recording surface) facing the plate, as shown in figure 1.

iii. Fold the test piece over 180 °, adjacent to, and parallel with, the scribed line. Attach the metal plate and the free end of the test piece to the jaws of a universal testing machine and set the speed of the jaw separation to 254 mm per min.

iv. Note the force at which any part of the coating first separates from the base material. If this is less than 0,44 N, the tape has failed the test. If the test piece peels away from the double-sided pressure sensitive tape before the force exceeds 0,44 N, an alternative type of double-sided pressure sensitive tape shall be used.

v. Repeat i to iv for the back coating, if any.

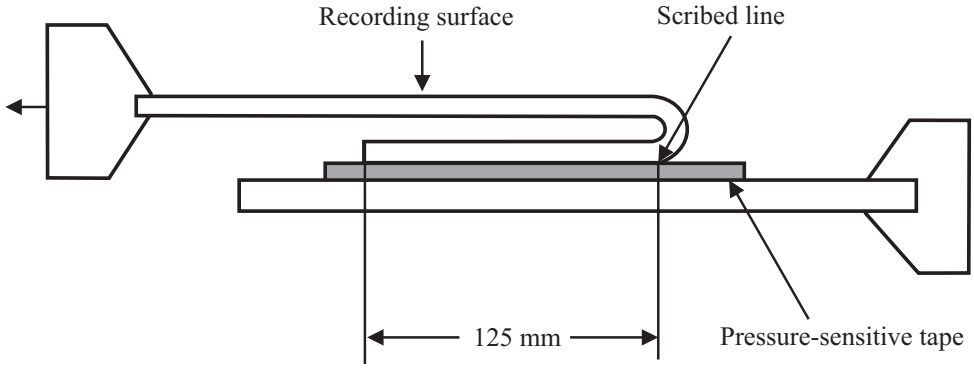

Figure 1 - Measurement of the coating adhesion

7.12 Layer-to-layer adhesion

Layer-to-layer adhesion refers to the tendency of a layer, when held in close proximity to the adjacent layer, to bond itself to an adjacent layer so that free and smooth separation of the layers is difficult.

7.12.1 Requirements

There shall be no evidence of delamination or other damage to the coatings.

7.12.2 Procedure

i. Fasten one end of a 914 mm length of tape, magnetic coating inwards, to a horizontally mounted stainless steel cylinder with a low cold-flow adhesive material.

ii. The dimensions of the cylinder shall be:

- diameter: 12,7 mm
- length: 102 mm

iii. Attach a mass of 1 000 g to the opposite end of the tape.

iv. Attach, 25,4 mm above the mass, a narrow strip of double-sided adhesive tape to the magnetic coating.

v. Slowly rotate the cylinder, so that the tape winds uniformly around it into a compact and even roll. The double-sided tape secures the end and prevents unwinding when the mass is removed.

vi. The cylinder with the tape shall then be exposed to the following temperature and humidity cycle:

Time	Temperature	RH
16 h to 18 h	54 °C	85 %
4 h	54 °C	10 % or less
1 h to 2 h	21 °C	45 %

© ISO/IEC 2000 – All rights reserved

Copyright International Organization for Standardization
Provided by IHS under license with ISO
No reproduction or networking permitted without license from IHS
Not for Resale

vii. Open the end of the roll and remove the double-sided adhesive tape.

viii. Release the free end of the tape.

ix. The outer one or two wraps shall spring loose without adhesion.

x. Hold the free end of the tape and allow the cylinder to fall, thereby unwinding the tape.

xi. The tape shall show no coating delamination, except for the 51 mm of tape nearest to the cylinder.

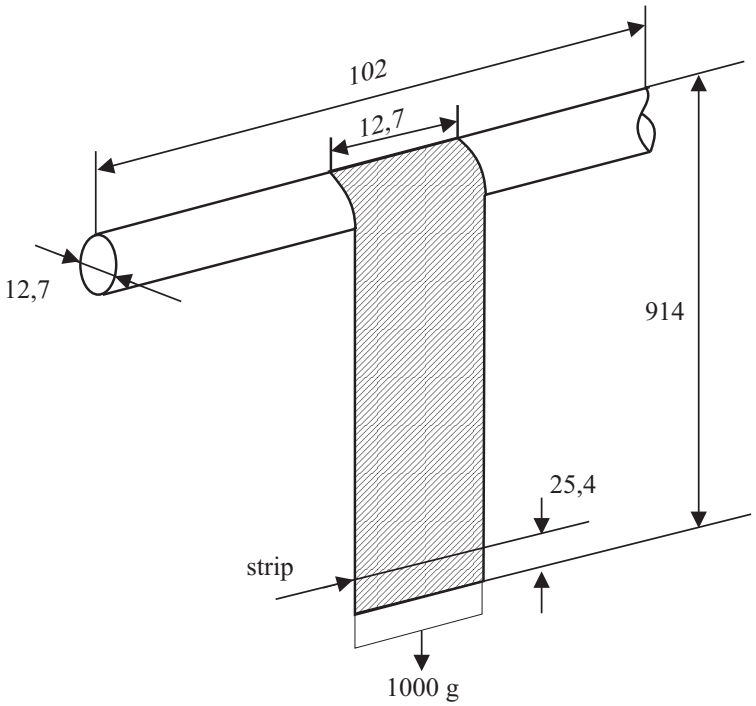

Figure 2 - Measurement of layer-to-layer adhesion

7.13 Electrical resistance

7.13.1 Requirement

The electrical resistance of any square area of the magnetic coating shall

— be greater than 1 x 10^6 Ω
— not exceed 10 x 10^{12} Ω

The electrical resistance of any square area of the back coating shall

— not exceed 100 x 10^6 Ω

7.13.2 Procedure

Condition a test piece of tape in the test environment for 24 h. Position the test piece over two 24-carat gold-plated, semi-circular electrodes having a radius r = 25,4 mm and a finish of at least N4, so that the recording surface is in contact with each electrode. These electrodes shall be placed parallel to the ground and parallel to each other at a distance d = 12,7 mm between their centres. Apply a force F of 1,62 N ± 0,41 N to each end of the test piece. Apply a d.c. voltage of 500 V ± 10 V across the electrodes and measure the resulting current flow. From this value, determine the electrical resistance.

Repeat for a total of 5 positions along the test piece and average the 5 resistance readings. For back-coated tape repeat the procedure with the back surface in contact with the electrodes.

© ISO/IEC 2000 – All rights reserved
Copyright International Organization for Standardization
Provided by IHS under license with ISO
No reproduction or networking permitted without license from IHS
Not for Resale

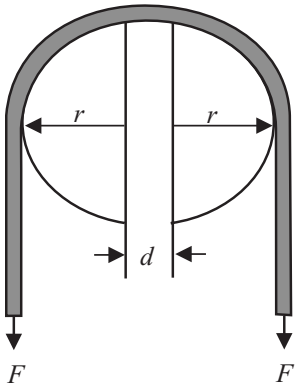

Figure 3 - Measurement of electrical resistance

When mounting the test piece, make sure that no conducting paths exist between the electrodes except that through the coating under test.

Note - Particular attention should be given to keeping the surfaces clean.

7.14 Abrasivity

Tape abrasivity is the tendency of the tape to wear the tape transport. When measured according to annex A, the depth of the wear pattern on the wear bar shall not exceed 35 μm.

7.15 Friction characteristics after stress

Friction is the force required to move the tape recording surfaces near the leader block end and near the hub end over a ferrite surface when measured after stress.

7.15.1 Requirements

The force required to move the tape at the leader block end shall not exceed 1,50 N. The maximum force required at the hub end shall not exceed the smaller of 6,0 N or ten times the value measured at the leader block end.

7.15.2 Procedure

i. Wind a sample of tape on a 50 mm diameter spool hub to an outside diameter of 99 mm. The wind tension shall be 1,4 N;

ii. Store at 50 °C, 10 % to 20 % relative humidity for 48 h;

iii. Acclimatise at 23 °C for 2 h. Then reapply the wind tension to 1,4 N by unwinding and rewinding tape;

iv. Repeat steps ii and iii five times for a total of 240 h at 50 °C;

v. Acclimatise the tape for 48 h at 30,5 °C, 85 % relative humidity. At that environment measure the force required to pull the recording surface over 90 ° of a polished ferrite rod of 25,4 mm diameter made of the material specified in annex A.

vi. Pull the sample over the rod at 1,0 mm/s while exerting a force of 0,64 N at the other end. Take force measurements with the tape sample near the outer diameter end and near the hub.

Note - The rod shall have been polished to a roughness value N2 (ISO 1302) or smoother.

7.16 Surface roughness

The surface roughness of the magnetic coating is the root mean square (RMS) of the surface topography.

7.16.1 Requirement

The surface roughness shall be between 4 nm and 7 nm.

7.16.2 Procedure

Use a WYKO 3D Profiler with a 512 by 512 pixel array detector and 20X magnification, or equivalent. Take the average of at least three samples.

--`,,```,,,,````-`-`,,`,,`,`,,`---

© ISO/IEC 2000 – All rights reserved

Copyright International Organization for Standardization
Provided by IHS under license with ISO
No reproduction or networking permitted without license from IHS
Not for Resale

7.17 Inhibitor tape

This International Standard does not specify parameters for assessing whether or not a tape is an inhibitor tape. However, annex F gives further information on inhibitor tapes.

8 Magnetic recording characteristics

The magnetic recording characteristics shall be defined by testing the requirements given below.

When performing the tests, the output or resultant signal shall be measured on the same relative pass for both a tape calibrated to the Master Standard Reference Tape and the tape under test (read-while-write, or on equipment without read-while-write capability, on the first forward-read-pass) on the same equipment.

The following conditions shall apply to the testing of all magnetic recording characteristics, unless otherwise noted.

— Tape condition: anhysteretically erased

— Tape speed: 2,00 m/s ± 0,05 m/s

— Read track: within the written track

— Azimuth alignment: 6 ' max. between the mean write transitions and the read gap

— Write gap length: 0,9 µm ± 0,1 µm

— Write head saturation density: 8 000 G ± 800 G

— Tape tension: 1,4 N ± 0,2 N

— Recording current: Test Recording Current (I_m)

— Physical recording densities: 1*f* = 2 550 ftpmm
4*f* = 10 200 ftpmm

The method of recording shall be as defined in clause 11.

8.1 Typical Field

The Typical Field shall be between 90 % and 110 % of the Reference Field.

Traceability to the Reference Field is provided by the calibration factors supplied with each Secondary Standard Reference Tape.

8.2 Signal amplitude

The Average Signal Amplitude at the physical recording density of 2 550 ftpmm shall be between 75 % and 125 % of the SRA.

Traceability to the SRA is provided by the calibration factors supplied with each Secondary Standard Reference Tape.

8.3 Resolution

The ratio of the average signal amplitude at the physical recording density of 2 550 ftpmm to that at the physical recording density of 4 000 ftpmm shall be between 80 % and 120 % of the same ratio for the Master Standard Reference Tape.

Traceability to the resolution of the Master Standard Reference Tape is provided by the calibration factors supplied with each Secondary Standard Reference Tape.

8.4 Broad-band signal-to-noise ratio (BBSNR)

The BBSNR is the ratio of average signal power to average integrated broad band (floor) noise power.

8.4.1 Requirement

The BBSNR of the tape shall not be lower than that of the Master Standard Reference Tape by more than 2,8 dB.

Traceability to the standard reference BBSNR is provided by the calibration factors supplied with each Secondary Standard Reference Tape.

The noise level of the measuring system shall be well below the noise level of the tape under test.

8.4.2 Procedure

i. Record a signal on the track at 2 550 ftpmm;

ii. Measure the signal power, averaging a minimum of 100 samples over 50 m of tape;

© ISO/IEC 2000 – All rights reserved
Copyright International Organization for Standardization
Provided by IHS under license with ISO
No reproduction or networking permitted without license from IHS
Not for Resale

iii. Measure the noise power of the written signal over a 300 kHz to 1 500 kHz bandwidth;

iv. Calculate the BBSNR as the average signal power divided by the integrated noise power, converted to dB using the equation BBSNR = $10 \times \log_{10}$ (S/N).

9 Tape quality

The quality of the tape (including the effects of exposure to storage and shipping environments) shall be defined by the testing requirements given in the following paragraphs. The following conditions shall apply to all quality testing requirements:

— Tape condition: pre-record condition

— Tape speed: 2,00 m/s ± 0,05 m/s

— Write-track width: 35 μm min.

— Read-track: 35 μm

— Azimuth alignment: 6 ' max. between the mean write transitions and the read gap

— Write-gap length: 0,9 μm ± 0,1 μm

— Write head saturation density: 8 000 G ± 800 G

— Tape tension: 1,4 N ± 0,2 N

— Recording current: Test Recording Current (I_m)

— Recording density: 2 550 ftpmm

9.1 Missing pulse

A missing pulse is a loss of read signal amplitude detected after writing at the physical recording density of 2 550 ftpmm. A missing pulse shall exist when the base-to-peak read signal amplitude is 25 % or less of half of the average signal amplitude (peak-to-peak) for the preceding 25,4 mm of tape.

9.1.1 Requirement

The average missing pulse rate shall be less than one missing pulse for each 5×10^6 flux transitions recorded. In addition, no single track shall have a mean missing pulse separation less than $2,5 \times 10^5$ flux transitions recorded.

9.1.2 Procedure

i. While reading the signal of single tracks, observe and count all missing pulses. When a missing pulse is detected, a second missing pulse shall not be counted until 48 consecutive missing pulse-free flux transitions are read. If a missing pulse persists for a distance of 0,7 mm, another missing pulse shall be counted.

ii. Calculate the missing pulse rate by dividing the number of missing pulses counted by the total number of flux transitions recorded on the tape.

iii. Calculate the mean missing pulse separation for each individual track by dividing the number of flux transitions recorded on a track by the number of missing pulses on the same track.

iv. The average missing pulse rate shall be the total number of flux transitions recorded on tape divided by the number of missing pulses counted.

9.2 Coincident missing pulse

A coincident missing pulse is a simultaneous missing pulse condition on five or more tracks of a sixteen-track group. A coincident missing pulse shall be counted as a single event regardless of length. There are eight sixteen-track groups in the format, as shown in table 2. (See 13.5.)

9.2.1 Requirement

No cartridge shall have more than 10 coincident missing pulses. No coincident missing pulse shall be longer than 25 mm.

9.2.2 Procedure

i. While reading the signals of a sixteen-track group, observe and count all coincident missing pulses.

ii. Measure the length of each coincident missing pulse from the start of the earliest event to the completion of the last event.

© ISO/IEC 2000 – All rights reserved

Copyright International Organization for Standardization
Provided by IHS under license with ISO
No reproduction or networking permitted without license from IHS
Not for Resale

9.3 Missing pulse density

Missing pulse density is the number of tracks within a sixteen-track group that contain missing pulses in a given section of tape. A section of tape for a 16-track group for this requirement shall be a tape length of 0,7 mm.

9.3.1 Requirement

There shall be no events as defined in the following procedure for a cartridge.

9.3.2 Procedure

i. While reading the signals of a 16-track group, observe for the occurrence of a missing pulse longer than 0,16 mm and start counting the tracks of the 16-track group that have missing pulses during the subsequent 8 sections;

ii. Count the number of tracks that have missing pulses over the first 2 sections and also over the first 8 sections. An event shall be having 5 or more error tracks in the first 2 sections, or 13 or more error tracks in the 8 sections.

9.4 Tape durability

This International Standard does not specify parameters for assessing tape durability. However, a recommended procedure is described in annex G.

Section 3 - Mechanical specifications of the tape cartridge

10 General

The tape cartridge shall consist of the following elements

— a case,
— a reel for the magnetic tape,
— a locking mechanism for the reel,
— a magnetic tape wound on the hub of the reel,
— a write-inhibit mechanism,
— a leader block,
— a latching mechanism for the leader block.

Dimensional characteristics are specified for those parameters deemed mandatory for interchange and compatible use of the cartridge. Where there is freedom of design, only the functional characteristics of the elements described are indicated. In the enclosed drawings a typical implementation is represented in third angle projection. Figures 4 to 21 show a typical implementation.

Where they are purely descriptive, the dimensions refer to three reference surfaces; A, B, and C which form a geometrical trihedral (see figure 4). Where the dimensions are related to the position of the cartridge in the drive, they may be referred to another surface of the cartridge.

Figure 4 shows a general view of the whole cartridge.
Figure 5 shows the top side of the case.
Figure 6 shows the front side of the case.
Figure 7 shows the rear side of the case.
Figure 8 shows the bottom side of the case.
Figure 8a shows an enlarged partial view of figure 8.
Figure 9 shows the side of the case.
Figure 10 shows an enlarged cross-section of leader block opening.
Figure 11 shows an enlarged view of a location notch.
Figure 12 shows a detail view of the opening in the case.
Figure 13 shows an enlarged partial cross-section of the cartridge in the non-operating position.
Figure 14 shows an enlarged view of the cartridge button.
Figure 15 shows the same cross-section as figure 15 but of a cartridge in the operating position.
Figure 16 shows schematically the teeth of the toothed rim.
Figure 17 shows two views of the leader block.
Figure 18 shows the attachment of the tape to the leader block.
Figure 19 shows the leader block inserted into the case.

--`,,```,,,,````-`-`,,`,,`,`,,`---

© ISO/IEC 2000 – All rights reserved
Copyright International Organization for Standardization
Provided by IHS under license with ISO
No reproduction or networking permitted without license from IHS
Not for Resale

10.1 Overall dimensions (figures 5 and 7)

The overall dimensions of the cartridge shall be

l_1 = 125,00 mm ± 0,32 mm

l_2 = 109,00 mm ± 0,32 mm

$l_3 = 24{,}50\ ^{+0{,}50\ \text{mm}}_{-0{,}32\ \text{mm}}$

The corners of the case shall be rounded off as specified by

r_1 = 3,00 mm max.

r_2 = 4,00 mm max.

r_3 = 3,00 mm min.

10.2 Write-inhibit mechanism (figures 5 and 6)

The write-inhibit mechanism shall have a flat surface identified by a visual mark, such as a white spot, when in the position in which writing is inhibited.

The flat surface shall be accessible through a window in the front side of the case. The location and dimensions of the window shall be specified by

l_4 = 11,80 mm ± 0,25 mm

l_5 = 15,60 mm ± 0,25 mm

l_6 = 7,40 mm ± 0,25 mm

l_7 = 12,00 mm ± 0,25 mm

In the write-inhibit position the flat surface of the write-inhibit mechanism shall be behind this window at a distance

l_8 = 2,55 mm min.

from the front side of the case.

In the write-enable position this surface shall be within 0,25 mm of the front side of the case.

The force required for the operation of the write-inhibit mechanism shall be in the range

2 N to 9 N

when applied tangentially to the surface of the case.

This International Standard does not prescribe the actual implementation of the write-inhibit mechanism. For example, it can be a rotatable or a slidable element. The implementation may require a larger or additional window but shall not impair the integrity of the case against potential contaminants.

10.3 Label areas of the rear side (figures 5 and 7)

On the rear side of the case there shall be two label areas, provided to hold labels

The label area shall be specified by

l_9 = 7,00 mm ± 0,25 mm

$l_{10} = 80{,}00\ ^{+0{,}30\ \text{mm}}_{-0{,}16\ \text{mm}}$

l_{11} = 12,30 mm ± 0,25 mm

l_{12} = 0,50 mm ± 0,25 mm

l_{71} = 17,55 mm ± 0,13 mm

--`,,```,,,,````-`-`,,`,,`,`,,`---

© ISO/IEC 2000 – All rights reserved

Copyright International Organization for Standardization
Provided by IHS under license with ISO
No reproduction or networking permitted without license from IHS
Not for Resale

l_{72} = 2,41 mm ± 0,13 mm

l_{73} = 21,97 mm ± 0,25 mm

r_4 = 1,00 mm max.

A label bearing a letter J and its associated bar code, and complying with the requirements of annex B, shall be affixed in the area having dimension l_{71} and l_{11}.

10.4 Label area on the top side (figure 5)

On the top side of the case there shall have two label areas, recessed by 0,50 mm ± 0,25 mm.

The first label area shall be specified by l_9, l_{10} and in addition by

l_{13} = 31,00 mm ± 0,25 mm

$l_{14} = 75{,}00\ ^{+0{,}30\ \text{mm}}_{-0{,}16\ \text{mm}}$

The second label area shall be specified by l_9, l_{10} and in addition by

l_{70} = 11,43 mm ± 0,13 mm

l_{79} = 2,50 mm ± 0,25 mm

10.5 Case opening (figures 5, 6 and 10)

The case shall have an opening for the tape into which the leader block can be inserted (see also figure 19). This opening shall be specified by

l_{15} = 4,70 mm ± 0,25 mm

l_{16} = 14,90 mm ± 0,32 mm

l_{17} = 7,50 mm ± 0,25 mm

l_{18} = 87,10 mm ± 0,25 mm

l_{19} = 4,00 mm ± 0,25 mm

r_5 = 4,00 mm ± 0,25 mm

α = 50 ° ± 1 °

Moreover, figure 10 shows at a larger scale the details of the configuration of the case opening as seen at the right-hand side of figure 5.

l_{61} = 3,9 mm ± 0,5 mm

$l_{62} = 16{,}9\ ^{+0{,}5\ \text{mm}}_{-0{,}4\ \text{mm}}$

l_{63} = 3,0 mm ± 0,5 mm

l_{64} = 11,6 mm ± 0,5 mm

ω_1 = 1 ° 0 ' ± 30 '

ω_2 = 20 ° ± 2 °

10.6 Locating notches (figures 8, 9 and 11)

There shall be two locating notches open towards the bottom side. These location notches shall be specified by

l_{20} = 106,00 mm ± 0,25 mm

© ISO/IEC 2000 – All rights reserved
Copyright International Organization for Standardization
Provided by IHS under license with ISO
No reproduction or networking permitted without license from IHS
Not for Resale

l_{21}= 5,00 mm ± 0,25 mm

l_{22} = 7,00 mm ± 0,25 mm

l_{23} = 104,00 mm ± 0,25 mm

l_{24} = 2,50 mm ± 0,25 mm

β = 1 ° 30 ' ± 30 '

γ = 2 ° 0 ' ± 30 '

10.7 Locating areas (figure 8)

The bottom side of the case shall have three circular locating areas a_1, a_2, and a_3 which shall lie in the same horizontal plane within 0,25 mm.

Areas a_1 and a_2 shall have a diameter of 10,00 mm ± 0,25 mm. The position of their centre shall be specified by

l_{25} = 108,50 mm ± 0,25 mm

l_{26} = 3,50 mm ± 0,25 mm

l_{27} = 105,50 mm ± 0,25 mm

Area a_3 shall have a diameter of 14,00 mm ± 0,25 mm. The position of its centre shall be specified by

l_{28} = 31,25 mm ± 0,25 mm

l_{29} = 54,50 mm ± 0,25 mm

10.8 Inside configuration of the case around the case opening (figures 8 and 12)

Figures 8 and 12 show the inside configuration of the case around the opening of the case. This configuration shall be defined as follows (see also 10.10)

l_{30} = 3,30 mm ± 0,25 mm

l_{31} = 18,40 mm ± 0,25 mm

r_6 = 1,50 mm ± 0,25 mm

r_7 = 1,50 mm ± 0,25 mm

The oblique edge of the case shall be tangential to the arc of a circle defined by r_6 at an angle

λ = 40 ° 0 ' ± 30 '

10.9 Other external dimensions of the case (figure 9)

The external form of the case shall be further specified by

l_{32} = 113,2 mm ± 0,3 mm

l_{33} = 26,00 mm ± 0,25 mm

r_8 = 145,50 mm ± 0,25 mm

r_9 = 145,50 mm ± 0,25 mm

δ = 30 ° 0 ' ± 30 '

10.10 Central window (figure 8)

The bottom side of the case shall have a central window. The location of its centre shall be specified by l_{29} and

l_{34} = 61,00 mm ± 0,25 mm

© ISO/IEC 2000 – All rights reserved

Copyright International Organization for Standardization
Provided by IHS under license with ISO
No reproduction or networking permitted without license from IHS
Not for Resale

Its diameter shall be

$$d_1 = 43{,}50 \text{ mm} \begin{matrix} +2{,}00 \text{ mm} \\ -0{,}25 \text{ mm} \end{matrix}$$

The angle with its apex at the centre of this window and formed by the two lines tangential to the parts shown in figure 8 in cross-section shall be

$\theta = 16\,° \; 0\,' \pm 30\,'$

10.11 Stacking ribs (figures 7 and 8)

The bottom side of the case shall have two parallel stacking ribs. Their dimensions shall be

$l_{35} = 5{,}00 \text{ mm} \pm 0{,}25 \text{ mm}$

$l_{36} = 1{,}00 \text{ mm} \pm 0{,}16 \text{ mm}$

$l_{37} = 74{,}50 \text{ mm} \pm 0{,}25 \text{ mm}$

Their location shall be

$l_{38} = 31{,}00 \text{ mm} \pm 0{,}25 \text{ mm}$

$l_{39} = 7{,}50 \text{ mm} \pm 0{,}32 \text{ mm}$

$l_{40} = 79{,}50 \text{ mm} \pm 0{,}25 \text{ mm}$

10.12 Recessed area (figure 8a)

The bottom of the case shall have a recessed area whose dimensions shall be

$$l_{55} = 0{,}45 \text{ mm} \begin{matrix} +\,0{,}10 \text{ mm} \\ -\,0{,}05 \text{ mm} \end{matrix}$$

$l_{67} = 5{,}00 \text{ mm} \pm 0{,}13 \text{ mm}$

$l_{68} = 16{,}50 \text{ mm} \pm 0{,}25 \text{ mm}$

$l_{69} = 61{,}55 \text{ mm} \pm 0{,}20 \text{ mm}$

$\mu_5 = 2{,}0\,° \text{ max.}$

$r_{16} = 0{,}25 \text{ mm max.}$

$r_{17} = 0{,}10 \text{ mm max.}$

Its location shall be defined by l_{20}.

10.13 Flexibility of the case

The flexibility of the top and bottom sides of the case (see figure 4) is the amount of deflection observed when they are submitted to a perpendicular force F.

10.13.1 Requirements

The amount of deflection d shall meet the following requirements

Deflection of the top side

$d \leq 0{,}38 + 0{,}054\,F$

Deflection of the bottom side

$d \leq 0{,}38 + 0{,}040\,F$

where

d is the measured deflection in millimetres, and

$4{,}5 \text{ N} \leq F \leq 54{,}0 \text{ N}$

Copyright International Organization for Standardization
Provided by IHS under license with ISO
No reproduction or networking permitted without license from IHS
Not for Resale
© ISO/IEC 2000 – All rights reserved

10.13.2 Procedure

The flexibility of the case shall be measured in a universal testing machine operating in the compression mode. A suitable load cell shall be used for the test. Apply a single point load with a radius of 10 mm ± 1 mm on the bottom and subsequently on the top of the cartridge at the points shown in figure 6 and figure 8, and specified by

l_{65} = 86,9 mm nominal

l_{66} = 54,5 mm nominal

10.14 Tape reel (figures 13 to 15)

Figures 13 to 15 show the tape reel mounted within the case. Figure 13 specifies the different dimensions of the reel when the cartridge is in hand, figure 15 when it is within the drive. For the sake of clarity of the drawing the stacking ribs are not shown in figures 13 and 15.

10.14.1 Locking mechanism (figures 13 and 14)

This International Standard does not specify the actual implementation of the locking mechanism. However functionally it shall satisfy the following requirements in the locked position:

— the angular resolution shall not be greater than 6 °;

— the reel shall not rotate by more than 10 ° when a torque not greater than 0,32 N·m is applied in the direction that will cause the tape to unwind.

The button of the locking mechanism shall be made of nylon 6/6 with 2 % ± 1 % molybdenum disulphide. Its dimensions shall be

d_7 = 2,0 mm ± 0,5 mm

d_8= 10,0 mm ± 0,2 mm

ρ = 15 ° ± 2 °

10.14.2 Axis of rotation of the reel

The axis of rotation of the reel shall be perpendicular to plane P (see figure 15 and 10.14.7) and shall pass through the centre of the central windows as specified by l_{29} and l_{34}. (See figure 8.)

10.14.3 Metallic insert (figures 13 and 15)

The reel shall have a metallic insert made of stainless steel (ISO 683/XII, type 3 or 7). It shall withstand a pull out force of 300 N min. Its dimensions shall be

$d_2 = 35{,}00\ ^{+0{,}20\ \text{mm}}_{-1{,}20\ \text{mm}}$

d_3 = 11,15 mm ± 0,05 mm

e_1 = 1,51 mm ± 0,10 mm

Its central opening (diameter d_3) shall be concentric with the axis of rotation of the reel within 0,15 mm.

The metallic insert shall be parallel to plane P within 0,15 mm.

10.14.4 Toothed rim (figure 16)

The reel shall have a toothed rim accessible through the central window, and having the dimensions

$d_4 = 36{,}00\ ^{+0{,}50\ \text{mm}}_{-0{,}00\ \text{mm}}$

d_5 = 41,00 mm ± 0,25 mm

ψ = 11° 3' ± 5'

--`,,```,,,,````-`-`,,`,,`,`,,`---
© ISO/IEC 2000 – All rights reserved
Copyright International Organization for Standardization
Provided by IHS under license with ISO
No reproduction or networking permitted without license from IHS
Not for Resale

10.14.5 Hub of the reel (figure 13)

The hub of the reel shall have a diameter

$$d_6 = 50{,}0 \text{ mm} \begin{matrix} +0{,}0 \text{ mm} \\ -0{,}2 \text{ mm} \end{matrix}$$

Further dimensions of the hub shall be

$$l_{41} = 13{,}05 \text{ mm} \pm 0{,}20$$

when measured at the hub surface, and

r_{10} = 0,08 mm max.

The hub shall meet the following requirements

— the straightness of the hub surface shall be within 0,04 mm,

— the perpendicularity to the plane P through the pitch line of the teeth of the rim (see 10.14.7) shall be within 0,07 mm,

— the ratio of the difference in the diameters d_6 of any two sections (perpendicular to the axis) to the distance between these sections shall not exceed 0,003 8,

— the rate of change across the width of the hub surface shall not exceed 0,025 mm per mm,

— the total runout of the hub related to the cylinder perpendicular to the circular pitch line (see 10.14.7) of the teeth of the toothed rim shall not exceed 0,2 mm total indicator reading.

10.14.6 Relative positions

10.14.6.1 With the cartridge held in the hand (figure 13)

— the distance of the tip of the button of the locking mechanism to Reference Surface C shall be

$$l_{42} = 1{,}90 \text{ mm} \begin{matrix} +1{,}40 \text{ mm} \\ -0{,}90 \text{ mm} \end{matrix}$$

— the distance from the bottom surface of the metallic insert to Reference Surface C shall be

$$l_{43} = 0{,}4 \text{ mm} \begin{matrix} +1{,}0 \text{ mm} \\ -0{,}5 \text{ mm} \end{matrix}$$

10.14.6.2 Whether the cartridge is in the hand or in the drive (figures 13 and 15)

— the distance from the bottom surface of the metallic insert to plane P shall be

l_{44} = 2,27 mm ± 0,12 mm

— the distance of the inside of the lower flange of the reel to plane P shall be

$$l_{45} = 0{,}650 \text{ mm} \begin{matrix} +0{,}127 \text{ mm} \\ -0{,}090 \text{ mm} \end{matrix}$$

10.14.6.3 With the cartridge in the drive (figure 15)

— the distance from the tip of the button of the locking mechanism to Reference Surface C shall be

l_{46} = 8,1 mm ± 0,2 mm

— the force required to move the button into this position shall not exceed 12,25 N,

— the distance from the centreline of the tape to Reference Surface C shall be

l_{47} = 12,25 mm nominal

— the distance from the Reference Surface C to plane P (see 10.14.7) shall be

l_{60} = 5,04 mm ± 0,20 mm

© ISO/IEC 2000 – All rights reserved
Copyright International Organization for Standardization
Provided by IHS under license with ISO
No reproduction or networking permitted without license from IHS
Not for Resale

10.14.7 Characteristics of the toothed rim (figure 16)

The toothed rim shall comprise 60 teeth spaced at an angle of

6 ° 0 ' ± 5 ' non-cumulative

The teeth are specified at the pitch diameter d_5 by

l_{48} = 4 mm nominal

l_{49} = 2 mm nominal

ϕ = 30 ° nominal

The pitch line is the circumference of the teeth taken at the distance l_{49}. The plane in which it lies is the plane P mentioned above.

The blend radius at the bottom of the teeth shall be

r_{11} = 0,25 mm max.

The blend radius at the tip of the teeth shall be

r_{12} = 0,2 mm ± 0,1 mm

10.15 Leader block (figure 17)

The leader block shall have the following dimensions.

l_{50} = 31,80 mm ± 0,04 mm

l_{51} = 6,8 mm ± 0,1 mm

l_{52} = 15,0 mm ± 0,2 mm

$l_{53} = 10{,}93\ ^{+0{,}06\ \text{mm}}_{-0{,}08\ \text{mm}}$

l_{54} = 5,46 mm ± 0,10 mm

$l_{56} = 16{,}5\ ^{+0{,}0\ \text{mm}}_{-0{,}2\ \text{mm}}$

l_{57} = 5,2 mm ± 0,2 mm

$r_{19} = 3{,}05\ ^{+0{,}20\ \text{mm}}_{-0{,}00\ \text{mm}}$

r_{13} = 25,00 mm ± 0,25 mm

r_{14} = 1,4 mm ± 0,2 mm

r_{15} = 5,50 mm nominal

r_{20} = 2,01 mm ± 0,13 mm

r_{21} = 4,19 mm ± 0,13 mm

r_{22} = 1,00 mm ± 0,13 mm

d_9 = 7,9 mm ± 0,1 mm

μ_1 = 48 ° 45’ nominal

μ_2 = 36 ° nominal

μ_6 = 15 ° 0’ nominal

© ISO/IEC 2000 – All rights reserved

Copyright International Organization for Standardization
Provided by IHS under license with ISO
No reproduction or networking permitted without license from IHS
Not for Resale

10.16 Attachment of the tape to the leader block (figure 18)

There shall be a cylindrical insert for attaching the tape to the leader block. It shall cover the full width of the tape and not protrude beyond the surfaces of the leader block.

In zone Z the bottom edge of the tape (as seen in figure 18) shall be parallel to the edge of the leader block within 0,12 mm and shall be at a distance

l_{58} = 1,90 mm ± 0,26 mm

from it, when measured while the tape is under tension.

When fixed to the leader block the end of the tape shall not protrude above the surface of the leader block by more than

l_{59} = 2,50 mm

The leader block shall remain attached to the tape when a force of 10 N is applied at an angle

μ_3 = 38 ° ± 2 °

as shown in figure 18.

10.17 Latching mechanism (figure 17)

This International Standard does not specify the actual implementation of the latching mechanism for the leader block. It specifies the position of the leader block and the forces required to pull out and to insert it.

When the leader block is latched into the case, the point defined by l_{51} and l_{54} (see figure 17) shall fall within a circle of radius 0,5 mm max. the centre of which is defined by the intersection of two lines specified by the nominal values of l_{17} and l_{18} (see figure 19).

The pull-out force, i.e. the force required to pull the leader block and the tape attached to it out of the cartridge shall satisfy both following conditions:

— to be in the range 2,0 N to 7,5 N and

— the product of the maximum value of the pull-out force and the displacement distance shall be less than 13 N·mm.

The insertion force shall be measured at the same angle and jaw separation speed as the pull-out force.

Procedure:

Clamp the cartridge in a universal testing machine that can extract the leader block at the angle μ_4 starting at the pickup point (see figure 19). The leader block pickup point is located by the intersection of the centre lines positions by dimensions l_{17} and l_{18}. Set the jaw separation speed to 10 mm/min, pull the leader block allowing it to pivot on the pulling pin as it exists the cartridge. Measure the distance between the point where the force first exceeds 0,5 N and the point where the maximum pull-out force is observed. The force shall be measured with a pin that fits into diameter d_9 and radius r_{19} (see figure 17).

The insertion force, i.e. the force required to push the leader block into latched position in the cartridge shall not be greater than 12 N when measured at an angle

μ_4 = 48 ° ± 3 °

10.18 Tape wind

When the cartridge is viewed from the top, the tape shall be wound counter-clockwise and with the recording surface toward the hub.

10.19 Wind tension

The tape shall be wound with a tension of

1,4 N ± 0,2 N

10.20 Circumference of the tape reel

The tape shall be wound to a circumference of between 296,3 mm and 313,6 mm.

© ISO/IEC 2000 – All rights reserved
Copyright International Organization for Standardization
Provided by IHS under license with ISO
No reproduction or networking permitted without license from IHS
Not for Resale

10.21 Moment of inertia

The moment of inertia of the tape reel is the ratio of the torque applied to it (complete with tape, hub and flanges) when it is free to rotate about a given axis to the angular acceleration thus produced about that axis.

The moment of inertia of the reel and tape shall be

— Between 190×10^{-6} kg·m^2 and 240×10^{-6} kg·m^2

— The moment of inertia of the empty reel shall be $36{,}00 \times 10^{-6}$ kg·m^2 $\pm$ $3{,}63 \times 10^{-6}$ kg·m^2

Procedure:

Torsionally oscillate the reel on an inertial dynamics unit. The oscillation period shall be measured electronically with a universal counter. The oscillation time shall then be converted to its rotational inertial value.

10.22 Material

The cartridge can be made of any material as long as the requirements of this International Standard are met. For example, the hub and the case could be made of 10 % glass-filled polycarbonate. A typical wall thickness is 1,5 mm.

10.23 Cartridge identification notches (figure 8a)

The data recording cartridge shall have two sensing notches as shown on figure 8a that can be sensed by the cartridge drive.

The identification notches shall be specified by

l_{80} = 27,60 mm ± 0,13 mm

l_{82} = 81,90 mm ± 0,13 mm

l_{83} = 7,00 mm ± 0,25 mm

Their depth and width shall be as detailed in Section A-A.

l_{74} = 6,83 mm ± 0,13 mm

l_{75} = 11,10 mm ± 0,13 mm

r_{18} = 1,52 mm ± 0,13 mm

10.24 Finger slot (Figure 8a)

The case shall have a finger slot as shown in figure 8a and its section C-C. Its dimensions shall be

l_{76} = 28,80 mm ± 0,13 mm

l_{77} = 7,14 mm ± 0,13 mm

l_{78} = 9,37 mm ± 0,13 mm

l_{81} = 40,10 mm ± 0,13 mm

© ISO/IEC 2000 – All rights reserved

Copyright International Organization for Standardization
Provided by IHS under license with ISO
No reproduction or networking permitted without license from IHS
Not for Resale

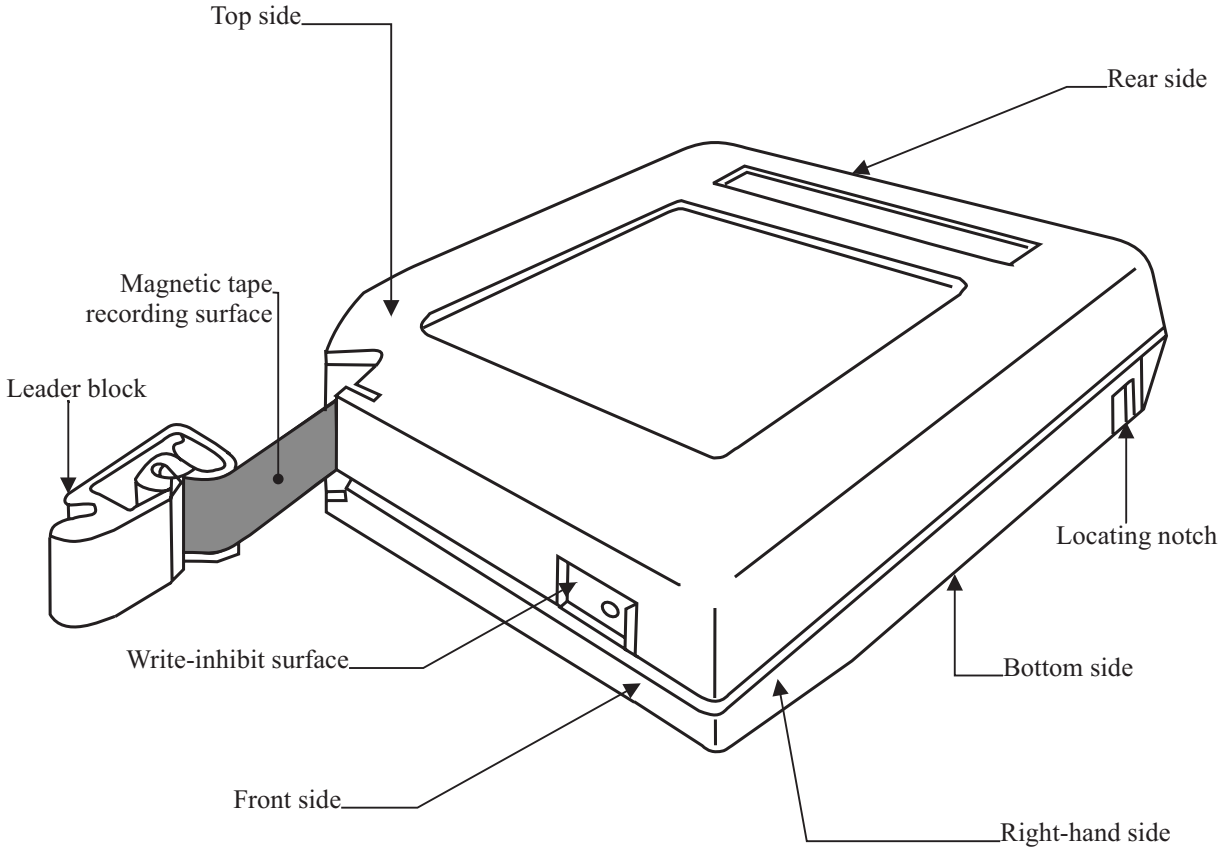

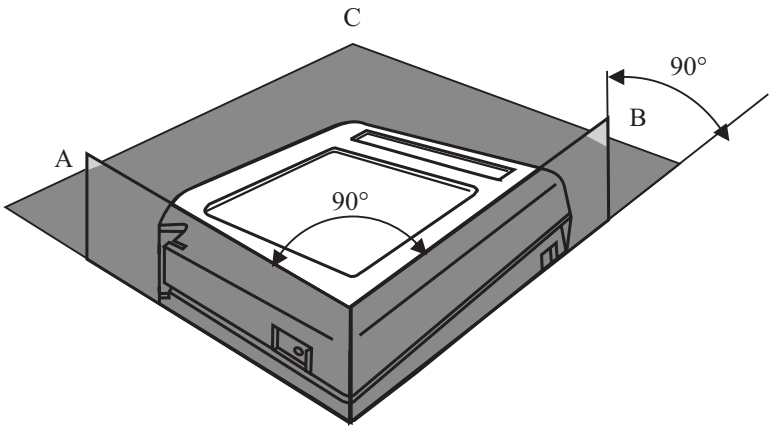

Figure 4 - General view

© ISO/IEC 2000 – All rights reserved
Copyright International Organization for Standardization
Provided by IHS under license with ISO
No reproduction or networking permitted without license from IHS
Not for Resale

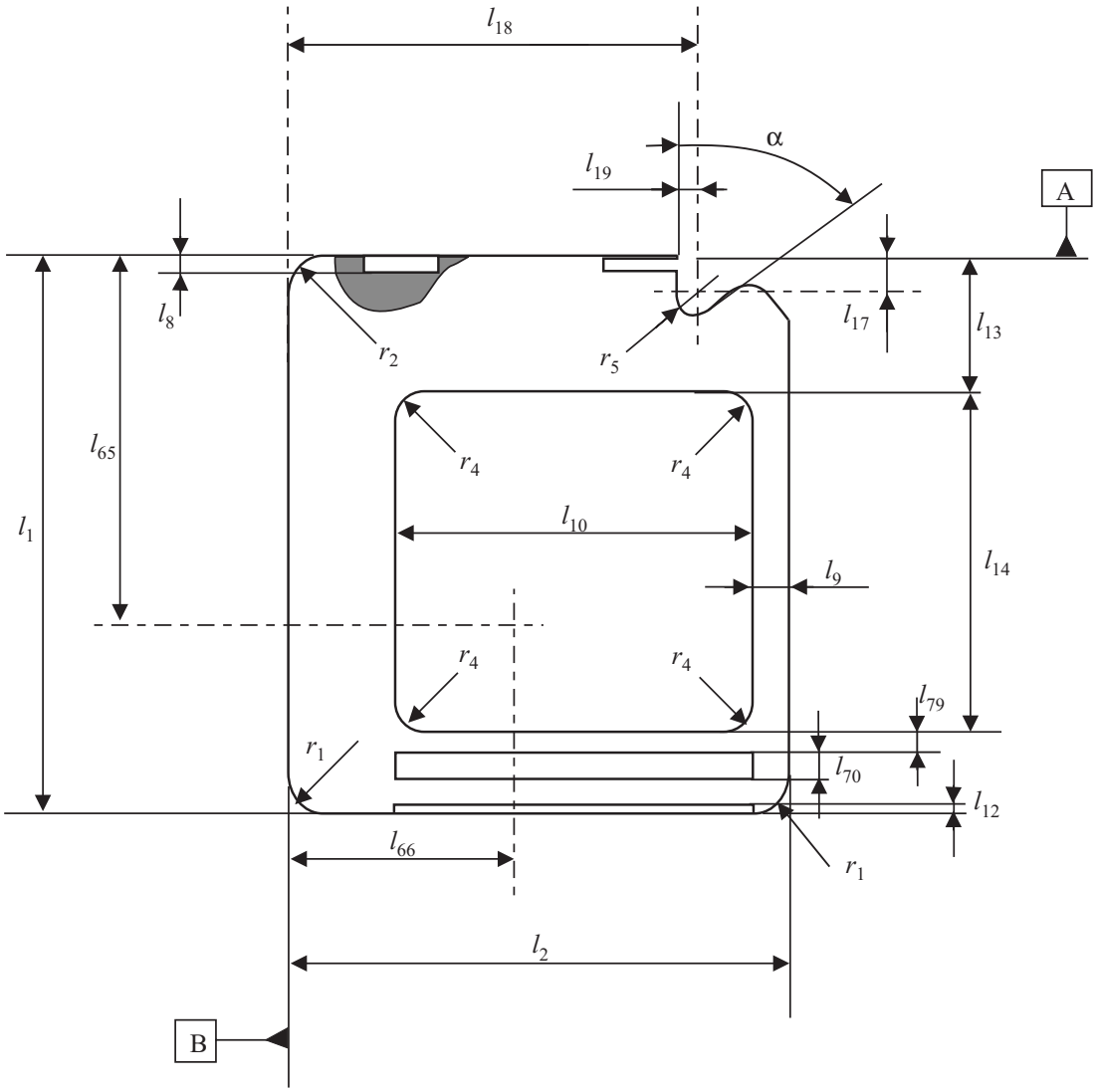

Figure 5 - Top side of case

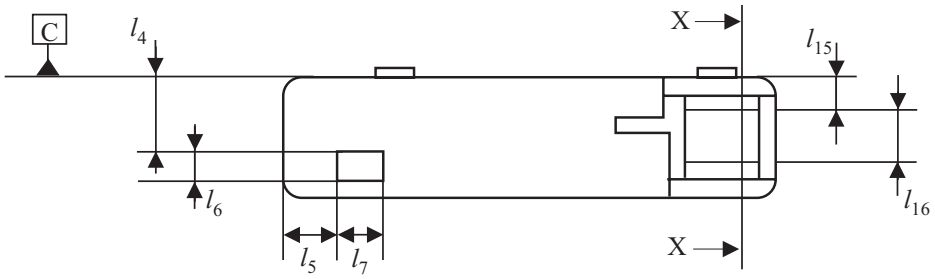

Figure 6 - Front side of case

© ISO/IEC 2000 – All rights reserved

Copyright International Organization for Standardization
Provided by IHS under license with ISO
No reproduction or networking permitted without license from IHS
Not for Resale

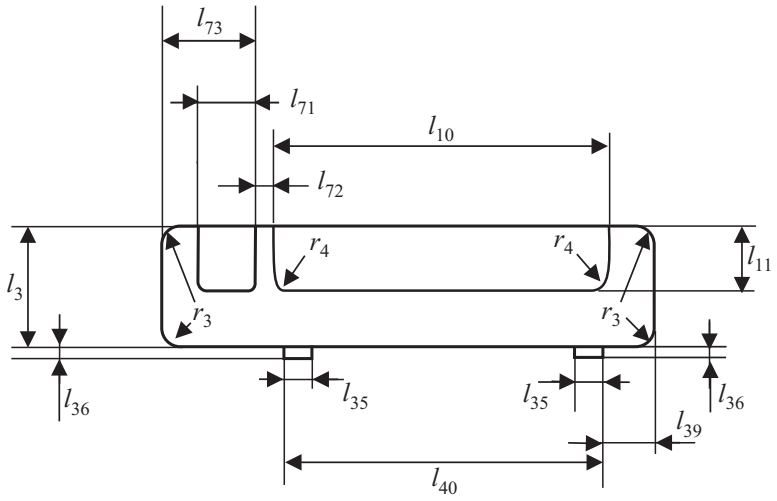

Figure 7 - Rear side of case

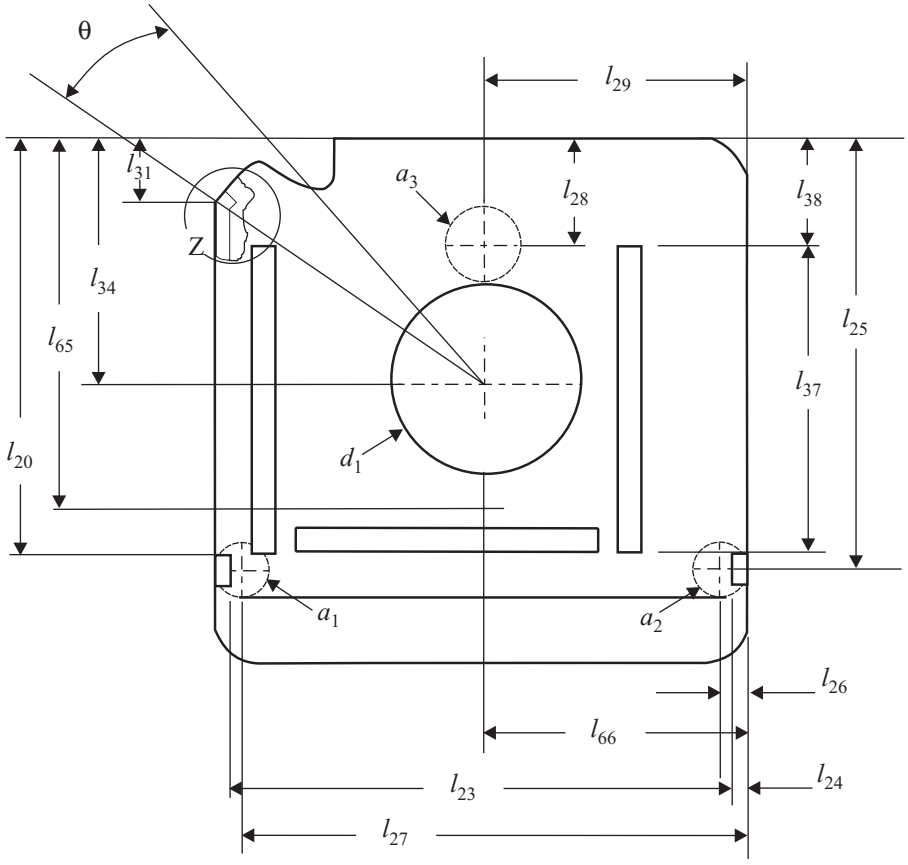

Figure 8 - Bottom side of the case

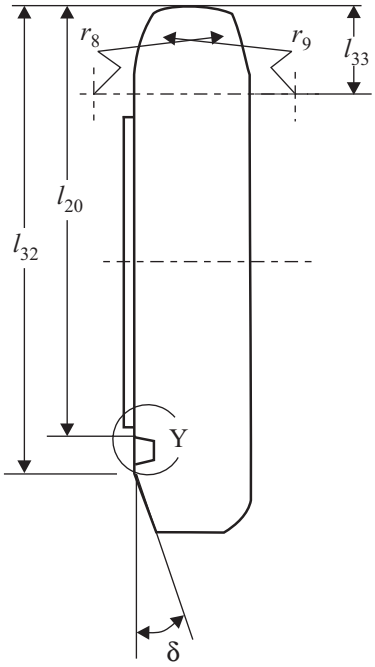

Figure 9 - Right-hand side of the case

© ISO/IEC 2000 – All rights reserved
Copyright International Organization for Standardization
Provided by IHS under license with ISO
No reproduction or networking permitted without license from IHS
Not for Resale

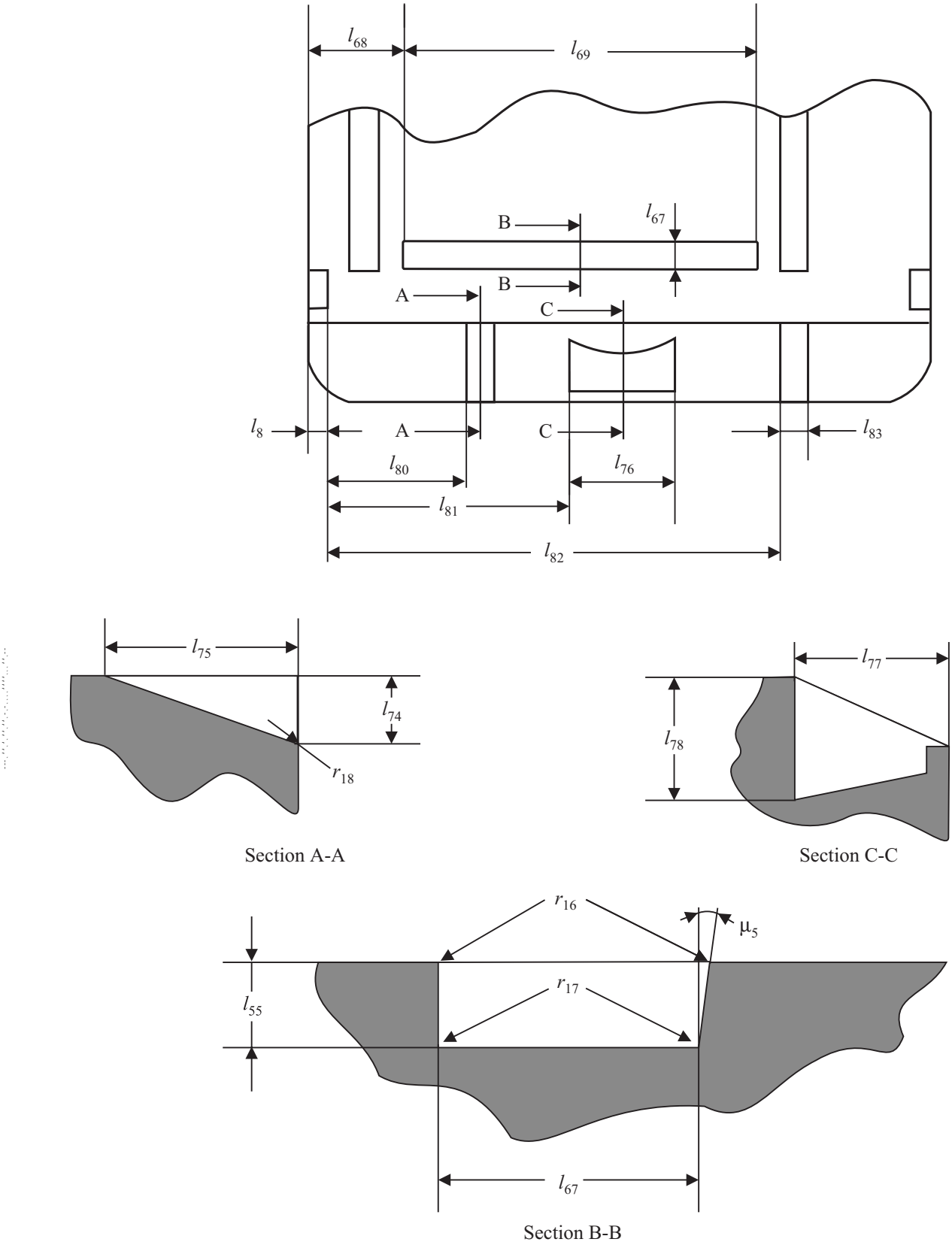

Figure 8a - Partial, enlarged view of the bottom part of figure 8

© ISO/IEC 2000 – All rights reserved

Copyright International Organization for Standardization
Provided by IHS under license with ISO
No reproduction or networking permitted without license from IHS
Not for Resale

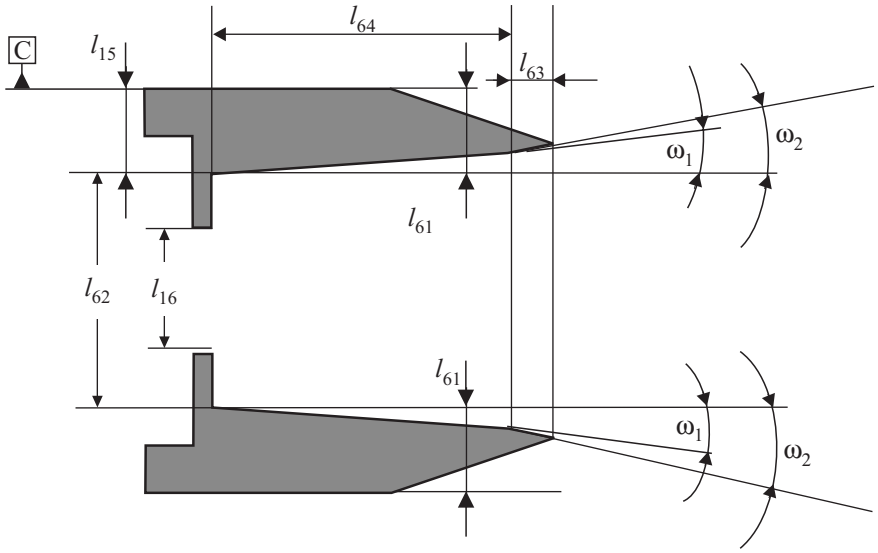

Figure 10 - Cross-section X-X of figure 6

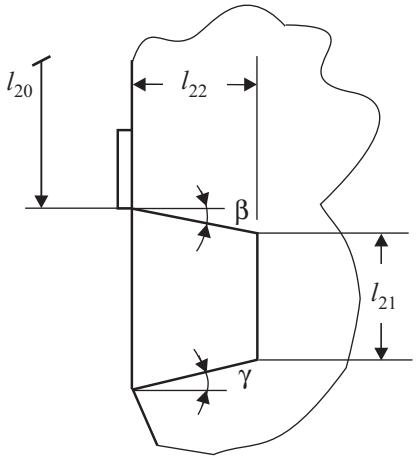

Figure 11 - View Y of figure 9

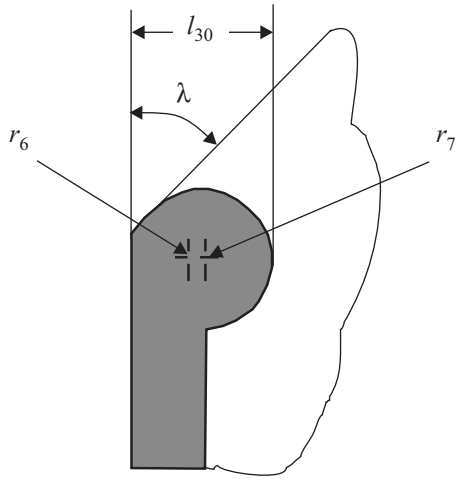

Figure 12 - Detail Z of figure 8

© ISO/IEC 2000 – All rights reserved
Copyright International Organization for Standardization
Provided by IHS under license with ISO
No reproduction or networking permitted without license from IHS
Not for Resale

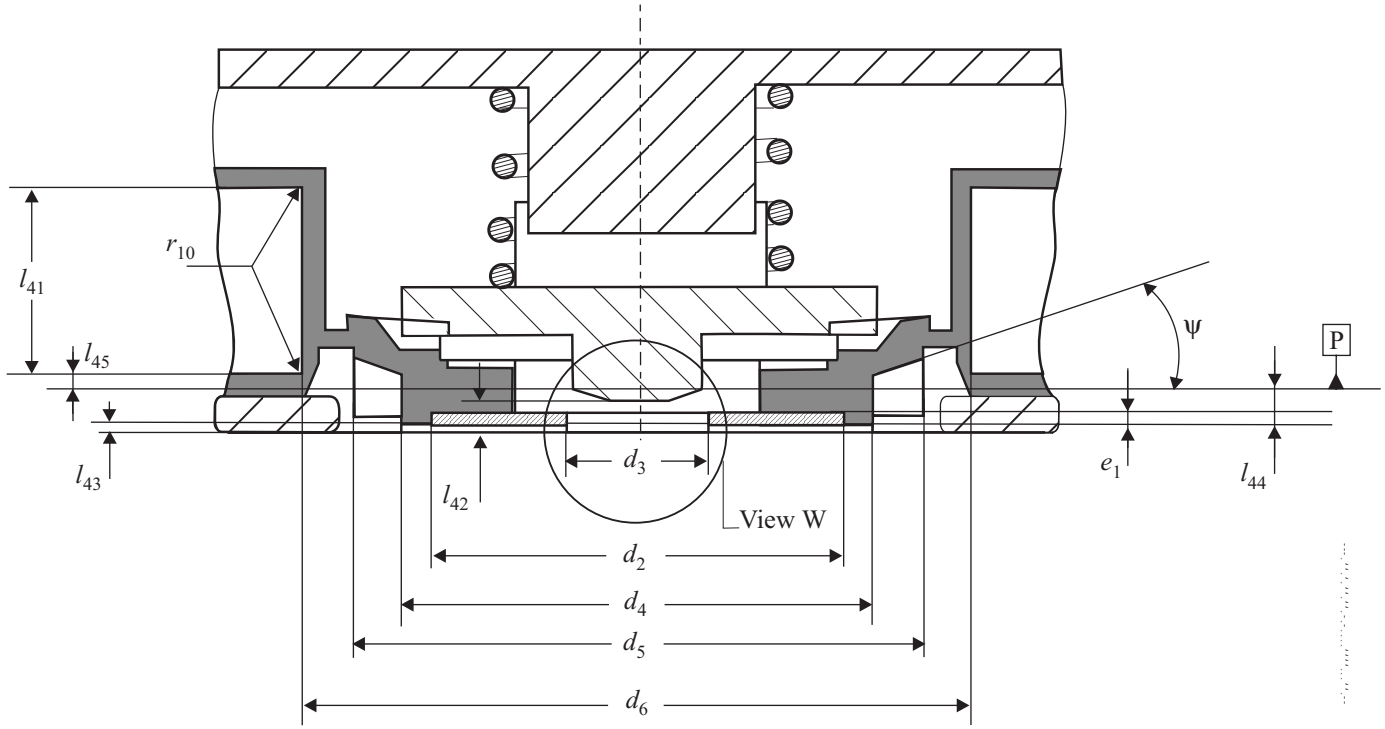

Figure 13 - Cartridge in non-operating position

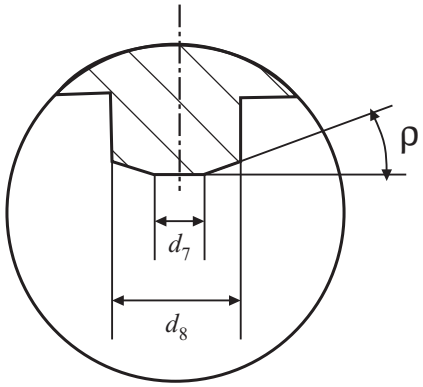

Figure 14 - View W of figure 13

© ISO/IEC 2000 – All rights reserved

Copyright International Organization for Standardization
Provided by IHS under license with ISO
No reproduction or networking permitted without license from IHS
Not for Resale

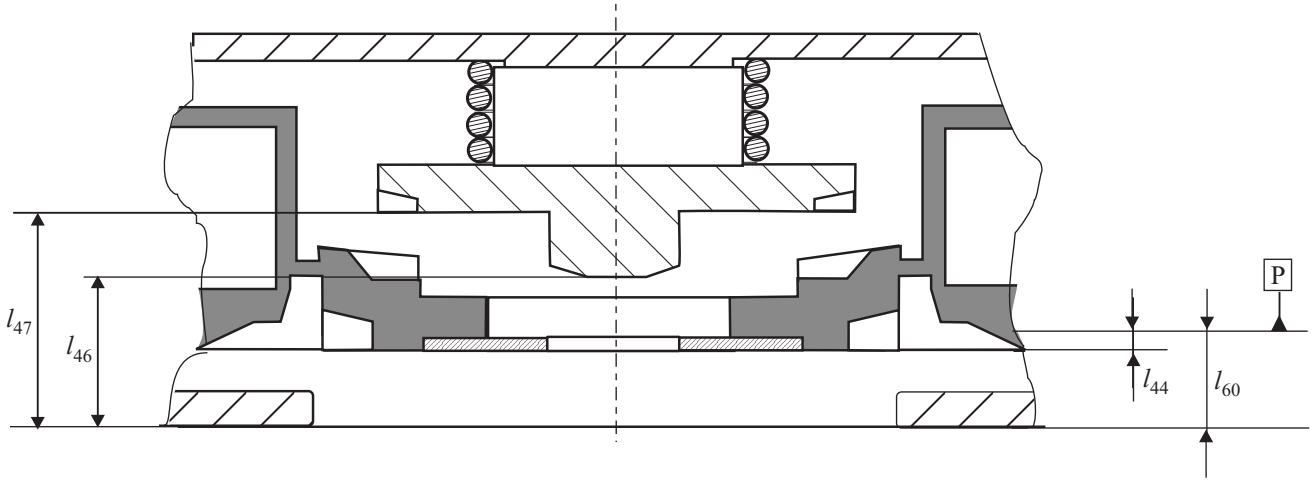

Figure 15 - Cartridge in operating position

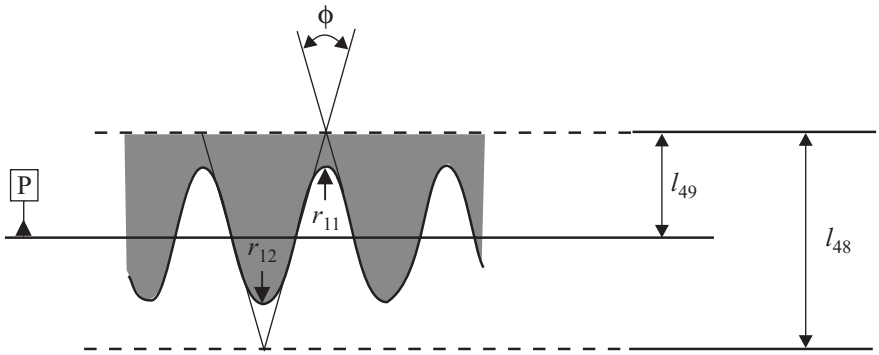

Figure 16 - Cartridge in operating position

© ISO/IEC 2000 – All rights reserved
Copyright International Organization for Standardization
Provided by IHS under license with ISO
No reproduction or networking permitted without license from IHS
Not for Resale

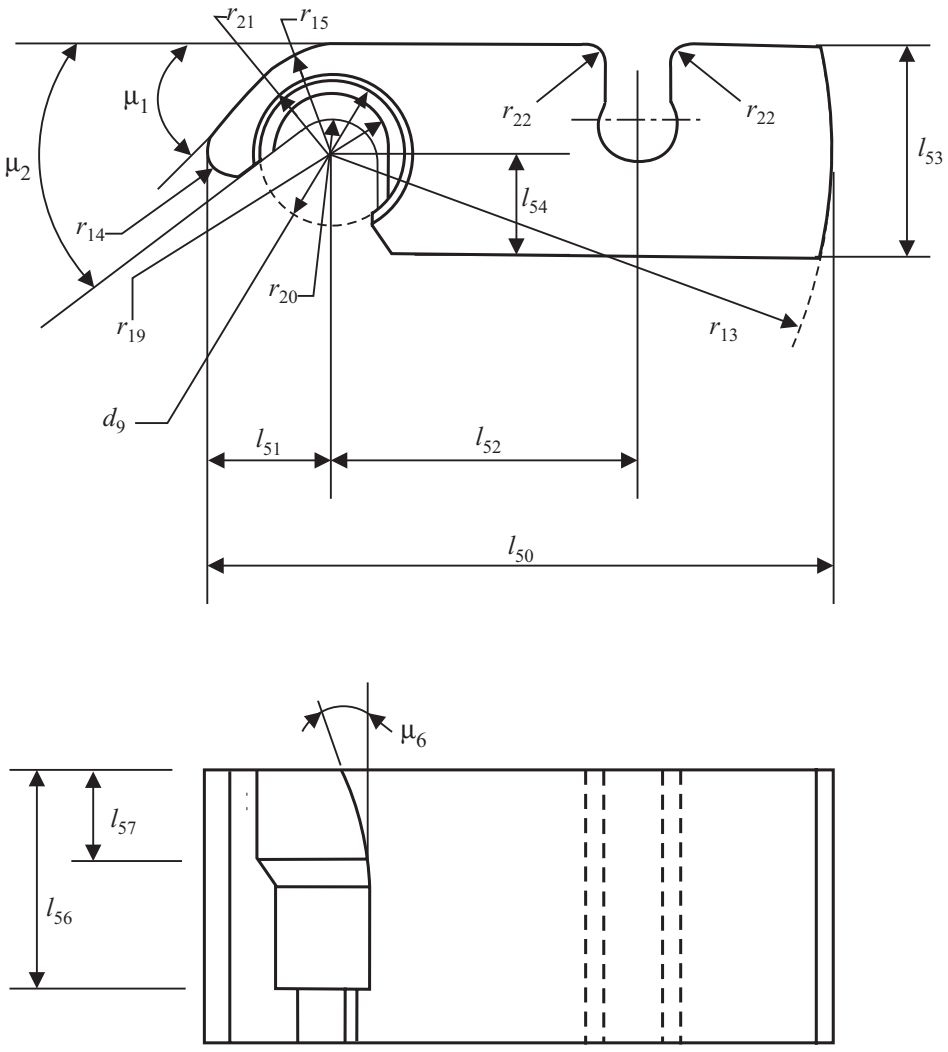

Figure 17 - Overall view of the leader block

© ISO/IEC 2000 – All rights reserved

Copyright International Organization for Standardization
Provided by IHS under license with ISO
No reproduction or networking permitted without license from IHS
Not for Resale

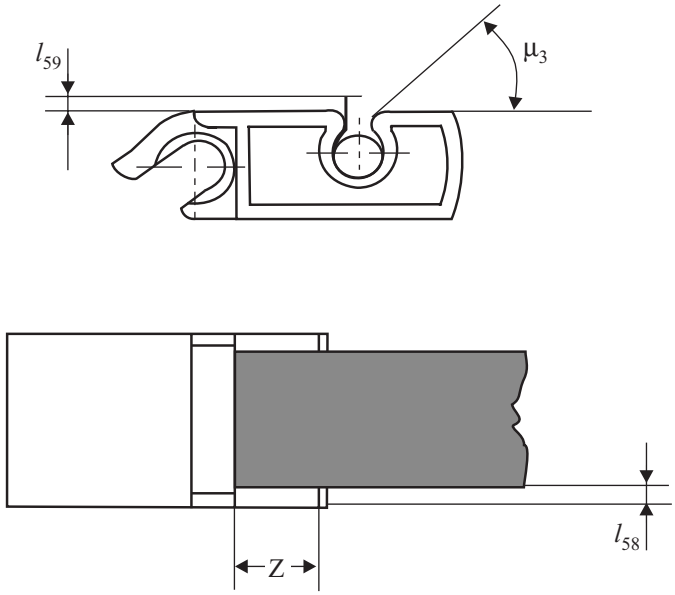

Figure 18 - Attachment of the tape to the leader block

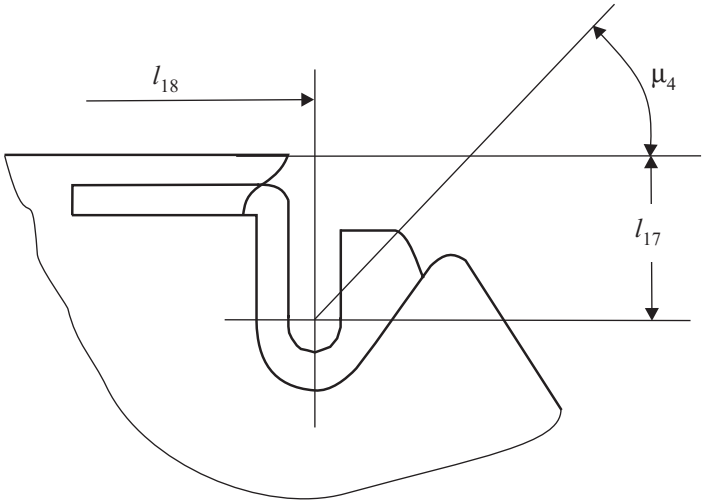

Figure 19 - Leader block inserted in the case

© ISO/IEC 2000 – All rights reserved
Copyright International Organization for Standardization
Provided by IHS under license with ISO
No reproduction or networking permitted without license from IHS
Not for Resale

Section 4 - Requirements for an interchanged tape

11 Method of recording

The method of recording shall be write-equalised RLL encoded recording.

For each RLL encoded ONE or ZERO there shall be two recorded cells.

Within recorded cells the method of recording shall be

A ONE shall be represented by a transition in the centre of the recorded bit cell.
A ZERO shall be represented by no transition within the recorded bit cell.

11.1 Physical recording density

The maximum physical recording density shall be 10 200 ftpmm. The repeated ONE–ZERO RLL bit pattern shall be encoded as a transition followed by three recorded cells without a transition. This shall result in a transition density of 2 550 ftpmm.

The physical recording density shall be at two times the RLL bit cell density.

Maximum	10 200 ftpmm
Minimum	2 550 ftpmm

11.2 Bit cell length

The nominal recorded bit cell length shall be 0,098 μm.

The nominal RLL bit cell length shall be 0,196 μm.

11.3 Average bit cell length

The average bit cell length shall be the sum of the lengths of *n* consecutive bit cells divided by *n*.

11.3.1 Long-term average RLL bit cell length

The long-term average RLL bit cell length shall be the average RLL bit cell length taken over a minimum of 25 000 RLL bit cells. It shall be within 4 % of the nominal RLL bit cell length.

11.3.2 Short-term average RLL bit cell length

The short-term average RLL bit cell length shall be the average taken over 336 RLL bit cells. It shall be within 7 % of the nominal RLL bit cell length.

11.4 Rate of change of the short-term average RLL bit cell length

The rate of change of the short-term average RLL bit cell length shall not exceed 1,6 % as defined below, where STA_n is the time measured over the first 336 RLL bits and STA_{n+1} is the time measured over the next 336 RLL bits.

$$\left| \frac{STA_n}{\leftarrow 336 \text{ bits} \rightarrow} \right| \left| \frac{STA_{n+1}}{\leftarrow 336 \text{ bits} \rightarrow} \right| -$$

$$100 \times \frac{\left| STA_n - STA_{n+1} \right|}{STA_n} \leq 1{,}6\%$$

The adjacent 336-RLL bit windows, containing random data patterns, shall not contain any missing transitions.

11.5 Bit shift

The maximum displacement of any zero-crossing, exclusive of missing pulses, shall not deviate by more than 45 % from the expected nominal position as defined by the average RLL bit cell length. See annex C for the test procedure.

11.6 Total character skew

No bit in a track belonging to the same track group shall be displaced by more than 100 RLL bit cell lengths from a simultaneously recorded bit in any track in the same track group when measured in a direction parallel to the tape Reference Edge.

© ISO/IEC 2000 – All rights reserved

Copyright International Organization for Standardization
Provided by IHS under license with ISO
No reproduction or networking permitted without license from IHS
Not for Resale

11.7 Missing zero-crossing zones

A missing zero-crossing zone shall begin with a missing zero-crossing and shall end when 544 consecutive RLL bits are detected with no missing zero-crossings or a length of 1 mm of tape has been measured.

11.8 Coincident missing zero-crossing zones

No coincident missing zero-crossing zone which exceeds 0,106 mm shall be permitted in any MIU. (See clause 14.8.) No coincident missing zero-crossing zone which exceeds 50 mm shall be permitted within the recorded region of the tape.

For the purposes of measuring missing zero-crossing zones, the 16 tracks in each half-wrap shall be considered as a single group. A simultaneous missing zero-crossing zone condition on three or more tracks of each 16-track half-wrap shall be a coincident missing zero-crossing zone.

12 Servo tracks

There shall be nine servo tracks. The servo tracks shall be located in three bands each having three tracks. The servo tracks shall be used for track following while the cartridge is being operated in the cartridge drive. The servo tracks shall be written before the cartridge is used for the first time for data storage and retrieval. All servo tracks shall be located at specific distances from the tape Reference Edge described in figure 20.

The Reference Edge of the tape shall be the bottom edge when viewing the recording side of the tape with the hub end of the tape to the observer's right (see figure 23).

12.1 Locations of the servo tracks

Figure 20 shows the servo track locations relative to the tape Reference Edge. The servo tracks shall be identified as ST1 to ST9. The common edge of a pair of adjacent servo tracks is called a servo edge and shall be identified as SE1 to SE6. Two servo groups shall be made up from the six servo edges. The odd-numbered servo edges SE1, SE3 and SE5 shall make up the upper servo group. The even-numbered servo edges SE2, SE4 and SE6 shall make up the lower servo group.

The centreline of ST5 shall be located

l_{90} = 6,324 mm ± 0,015 mm

from the tape Reference Edge.

The centreline of ST2 shall be located

l_{91} = 2,855 mm ± 0,002 mm

above the centreline of ST5.

The centreline of ST8 shall be located

l_{92} = 2,855 mm ± 0,002 mm

below the centreline of ST5.

© ISO/IEC 2000 – All rights reserved
Copyright International Organization for Standardization
Provided by IHS under license with ISO
No reproduction or networking permitted without license from IHS
Not for Resale

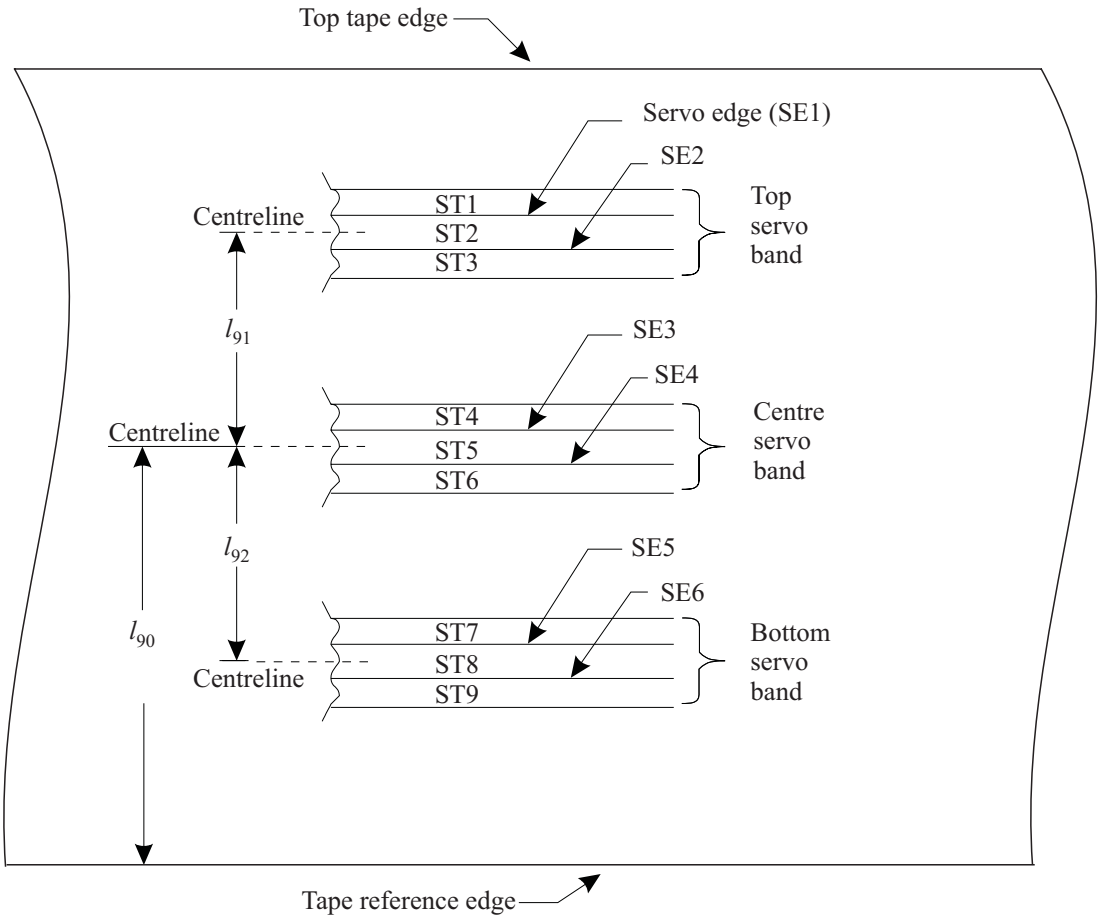

Figure 20 – Servo track physical locations

12.2 Physical width of the servo tracks

The widths of servo tracks ST1, ST3, ST4, ST6, ST7, and ST9 shall be 0,060 mm ± 0,010 mm. The width of servo tracks ST2, ST5, and ST8 shall be 0,080 mm ± 0,003 mm. The erased zone between adjacent servo tracks shall be less than 0,001 5 mm.

12.3 Format of the servo tracks

All servo tracks shall be written with a servo bit cell of 98,04 nm ± 0,98 nm.

The pattern for servo tracks ST1, ST3, ST4, ST6, ST7, and ST9 shall be repeating the 12-bit pattern 100010101010. A write current profile for this pattern shall be as shown in figure 21.

The pattern for servo tracks ST2, ST5, and ST8 shall be 429 repetitions of the 4-bit pattern 1010, followed by 64 repetitions of the 26-bit pattern 10010111100101111001011111. A write current profile for these patterns shall be as shown in figure 22.

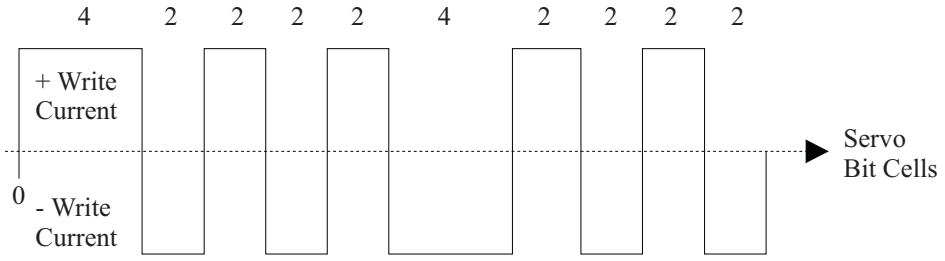

A write current profile showing 2 occurrences of the 12-bit pattern recorded on each outer servo track

Figure 21 - Outer servo track write current pattern

© ISO/IEC 2000 – All rights reserved

Copyright International Organization for Standardization
Provided by IHS under license with ISO
No reproduction or networking permitted without license from IHS
Not for Resale

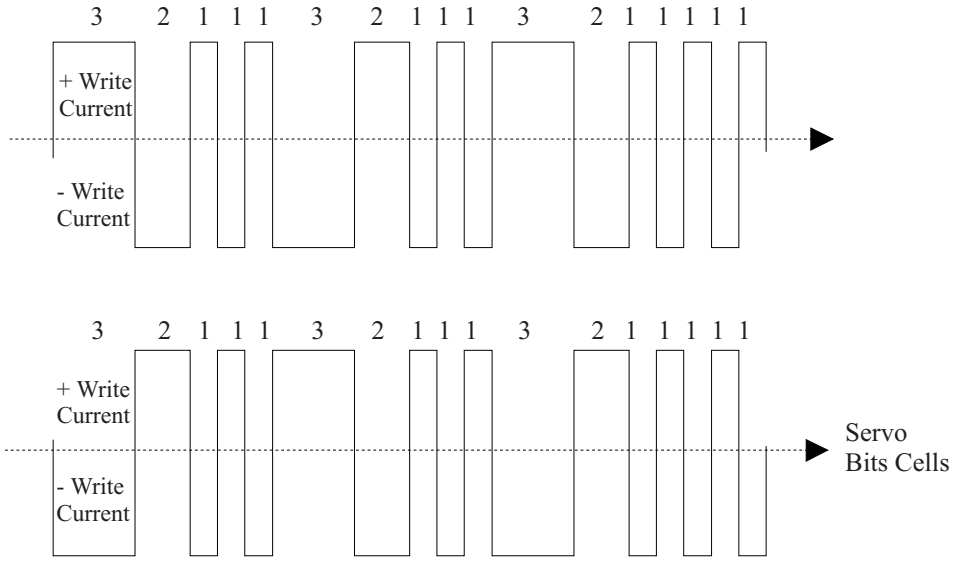

A write current profile showing 2 occurrences of the 26-bit pattern recorded on each inner servo track.

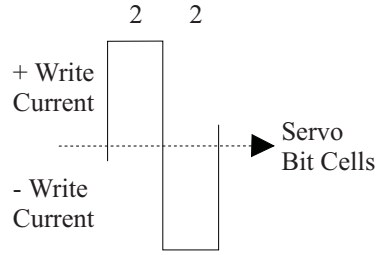

A write current profile showing 1 occurrence of the 4-bit pattern recorded on each inner servo track.

Figure 22 - Inner servo track write current pattern

12.4 Servo requirements

12.4.1 Servo amplitude

The signal amplitude of each of the nine servo tracks shall be 50 % min. of the SRA.

12.4.2 Servo azimuth

Azimuth in any servo track shall not exceed 10 '.

12.4.3 Servo errors

For measuring servo requirements, a suitable read head shall be centred and fixed on the nominal location of each servo edge (SE1, SE2 …) of the upper and lower servo group. The servo circuitry shall generate a tracking signal which represents the position difference, expressed in micrometres, between the actual servo edge position and the nominal servo edge position. The servo circuitry shall read at a rate of one sample each 0,41 mm nominally.

12.4.3.1 Tracking error

A tracking signal greater than 4,5 µm is a tracking error.

No tracking errors shall occur in any servo edge.

12.4.3.2 Tracking warning error

A tracking signal greater than 2,5 µm is a tracking warning error.

No more than 0,073 % of the samples from any servo edge shall be tracking warning errors.

© ISO/IEC 2000 – All rights reserved
Copyright International Organization for Standardization
Provided by IHS under license with ISO
No reproduction or networking permitted without license from IHS
Not for Resale

12.4.3.3 Tracking rate error

The difference between sequential tracking signal samples on a servo edge greater than 8 µm is a tracking rate error.

No more than 0,055 % of the samples on any servo edge shall be tracking rate errors.

No more than one tracking rate error shall occur within any 5 consecutive samples in a servo group.

12.4.3.4 Fade amplitude error

The nominal servo signal amplitude shall be the average amplitude of the previous 100 samples for that servo edge.

A servo signal amplitude sample less than 75 % of the nominal servo signal amplitude is a fade amplitude error.

No fade amplitude errors shall be allowed.

12.4.4 Servo edge spacing

Using the servo circuitry described in 12.4.3, the servo edge spacing between the two servo groups shall be within ± 0,001 mm of the nominal spacing between the two servo groups, when averaged over the length of the tape.

The positions of the six servo edges shall be measured simultaneously by reading each of the six elements which shall be placed over the nominal location of the servo edges. The elements shall be rigidly attached together and shall be aligned perpendicular to the tape within 3,0 mm.

12.5 Procedure

The checking operation for servo errors shall be conducted by monitoring recorded servo tracks with a fixed read head and processing the signals as they are read.

13 Data track format

13.1 Number of data tracks

There shall be 128 data tracks numbered consecutively from 1 to 128. Track number 1 shall be the track most distant from the Reference Edge.

13.2 Track positions

The position of the data tracks shall be referred to servo track ST5. Table 1 shall indicate the distance of the centreline of each data track to the centreline of servo track ST5. Data tracks 1 to 64 shall lie above ST5. Data tracks 65 to 128 shall lie below servo track ST5. Their positions are shown with a minus sign.

The tolerance shall be 10 µm for all data tracks.

--`,,```,,,,````-`-`,,`,,`,`,,`---

© ISO/IEC 2000 – All rights reserved

Copyright International Organization for Standardization
Provided by IHS under license with ISO
No reproduction or networking permitted without license from IHS
Not for Resale

Table 1 - Data Track Positions

Track	µm	Track	µm	Track	µm
1	5 528	44	1 790	87	-1 950
2	5 448	45	1 708	88	-2 030
3	5 368	46	1 628	89	-2 112
4	5 288	47	1 548	90	-2 192
5	5 206	48	1 468	91	-2 272
6	5 126	49	1 386	92	-2 352
7	5 046	50	1 306	93	-2 434
8	4 966	51	1 226	94	-2 514
9	4 884	52	1 146	95	-2 594
10	4 804	53	1 064	96	-2 674
11	4 724	54	984	97	-3 034
12	4 644	55	904	98	-3 114
13	4 562	56	824	99	-3 194
14	4 482	57	742	100	-3 274
15	4 402	58	662	101	-3 356
16	4 322	59	582	102	-3 436
17	4 240	60	502	103	-3 516
18	4 160	61	420	104	-3 596
19	4 080	62	340	105	-3 678
20	4 000	63	260	106	-3 758
21	3 918	64	180	107	-3 838
22	3 838	65	-180	108	-3 918
23	3 758	66	-260	109	-4 000
24	3 678	67	-340	110	-4 080
25	3 596	68	-420	111	-4 160
26	3 516	69	-502	112	-4 240
27	3 436	70	-582	113	-4 322
28	3 356	71	-662	114	-4 402
29	3 274	72	-742	115	-4 482
30	3 194	73	-824	116	-4 562
31	3 114	74	-904	117	-4 644
32	3 034	75	-984	118	-4 724
33	2 674	76	-1 064	119	-4 804
34	2 594	77	-1 146	120	-4 884
35	2 514	78	-1 226	121	-4 966
36	2 434	79	-1 306	122	-5 046
37	2 352	80	-1 386	123	-5 126
38	2 272	81	-1 468	124	-5 206
39	2 192	82	-1 548	125	-5 288
40	2 112	83	-1 628	126	-5 368
41	2 030	84	-1 708	127	-5 448
42	1 950	85	-1 790	128	-5 528
43	1 870	86	-1 870		

© ISO/IEC 2000 – All rights reserved
Copyright International Organization for Standardization
Provided by IHS under license with ISO
No reproduction or networking permitted without license from IHS
Not for Resale

13.3 Track width

The width of the written track shall be 80 μm ±3 μm.

13.4 Data azimuth

Azimuth in any data track shall not exceed 10 '.

13.5 Half-wraps

The 128 physical tracks are allocated to 8 sets of 16 tracks each, called half-wrap 0 to half-wrap 7. Table 2 shows the correlation between physical tracks and half-wraps.

The tape contains eight track groups, four written from logical point 1 and extending beyond logical point 2 and the other four written starting from beyond logical point 2 and extending beyond logical point 3. Half-wraps are numbered sequentially in the order they are processed starting with half-wrap 0.

Table 2 - Half-wrap Identification

Half-wrap number	Tape direction	Physical tracks
0	Physical Forward	2, 10, 18, 26, 34, 42, 50, 58, 66, 74, 82, 90, 98, 106, 114, 122
1	Physical Reverse	6, 14, 22, 30, 38, 46, 54, 62, 70, 78, 86, 94, 102, 110, 118, 126
2	Physical Forward	3, 11, 19, 27, 35, 43, 51, 59, 67, 75, 83, 91, 99, 107, 115, 123
3	Physical Reverse	7, 15, 23, 31, 39, 47, 55, 63, 71, 79, 87, 95, 103, 111, 119, 127
4	Physical Forward	4, 12, 20, 28, 36, 44, 52, 60, 68, 76, 84, 92, 100, 108, 116, 124
5	Physical Reverse	8, 16, 24, 32, 40, 48, 56, 64, 72, 80, 88, 96, 104, 112, 120, 128
6	Physical Forward	1, 9, 17, 25, 33, 41, 49, 57, 65, 73, 81, 89, 97, 105, 113, 121
7	Physical Reverse	5, 13, 21, 29, 37, 45, 53, 61, 69, 77, 85, 93, 101, 109, 117, 125

14 Tape format

14.1 General

The tape shall comprise three regions: a servo acquisition region, a volume control region, and a data region. The volume control region shall contain information about the cartridge format and quality. The data region shall contain data from a host computer.

Information shall be recorded as physical blocks on the tape.

14.2 Recording area

The recording area, for all half-wraps, shall be bounded by BOP and EOT, as shown in figure 23.

© ISO/IEC 2000 – All rights reserved

Copyright International Organization for Standardization
Provided by IHS under license with ISO
No reproduction or networking permitted without license from IHS
Not for Resale

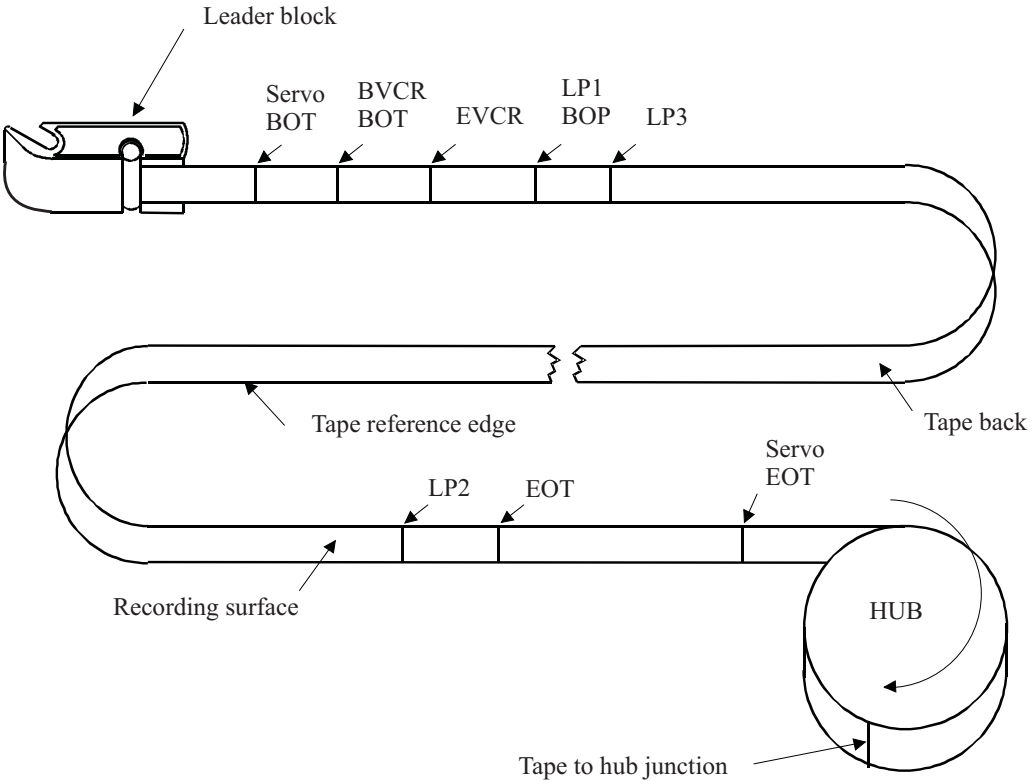

Figure 23 - Usable Recording Area

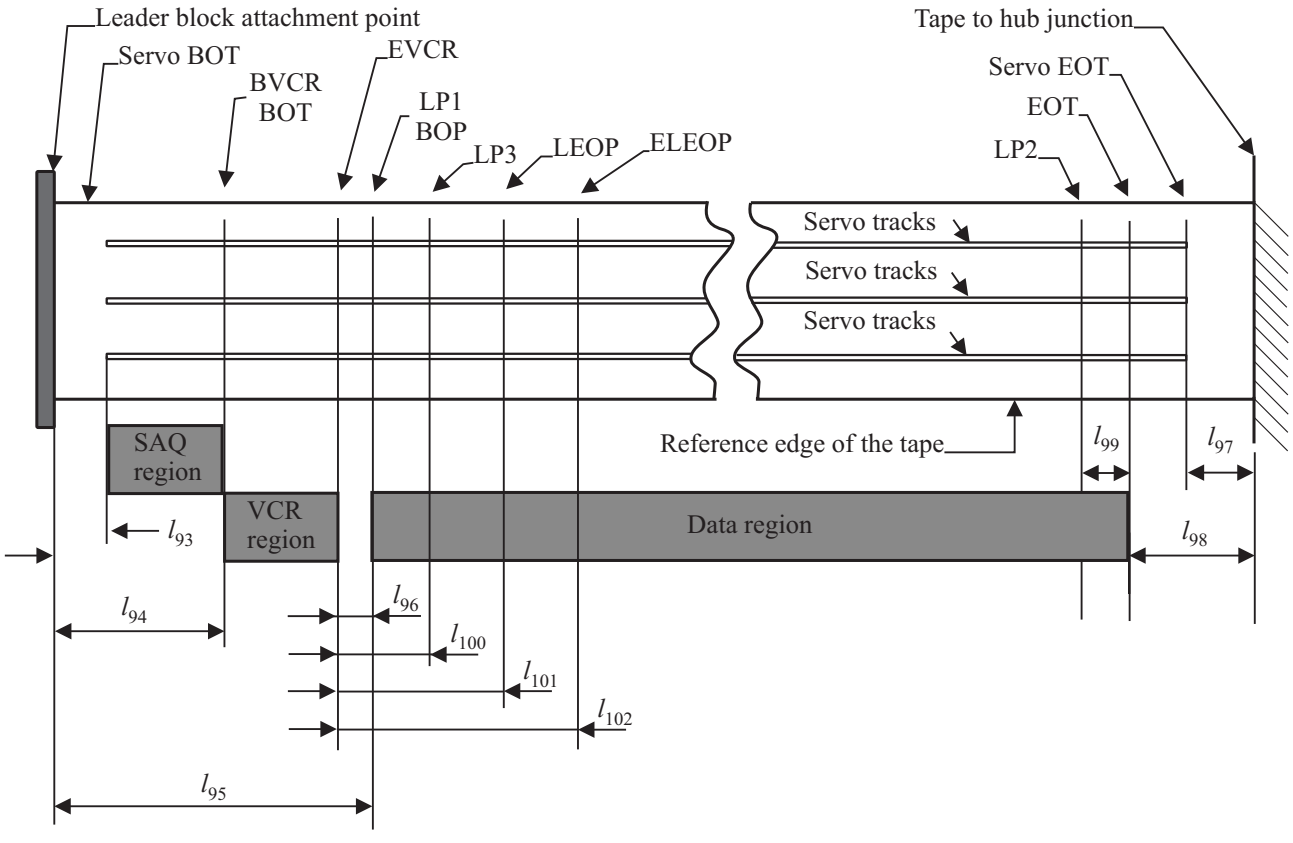

Figure 24 - Regions On Tape

© ISO/IEC 2000 – All rights reserved
Copyright International Organization for Standardization
Provided by IHS under license with ISO
No reproduction or networking permitted without license from IHS
Not for Resale

The recorded area of tape between servo BOT and servo EOT shall be divided into three regions as shown in figure 24 and table 3:

– SAQ region;
– VCR region;
– data region.

Table 3 - Region Dimensions

Dimension	Minimum	Nominal	Maximum
l_{93}	–	–	5,4 m
l_{94}	8,0 m	8,3 m	8,6 m
l_{95}	11,0 m	11,4 m	11,8 m
l_{96}	2,0 m	–	–
l_{97}	–	–	11,5 m
l_{98}	17,8 m	–	–
l_{99}	1,0 m	–	–
l_{100}	2,5 m	–	–
l_{101}	$l_{101} > l_{100}$	$l_{101} > l_{100}$	$l_{101} > l_{100}$
l_{102}	$l_{102} > l_{101}$	$l_{102} > l_{101}$	$l_{102} > l_{101}$

14.3 Tach count

Two tach counters shall provide information about the position of tape relative to the load point.

Tach counter C shall be a 4-byte counter which shall be reset to (00000000) when the cartridge leader block is inserted into the drive reel. Tach counter C shall be incremented by 512 for each 360 ° rotation of the cartridge reel when the tape is moved in the physical forward direction, and shall decrement by 512 for each 360 ° rotation of the cartridge reel when the tape is moved in the physical reverse direction.

Tach counter M shall be a 4-byte counter which shall be reset to (00000000) when the cartridge leader block is inserted into the drive reel. Tach counter M shall be incremented by 512 for each 360 ° rotation of the drive reel when the tape is moved in the physical forward direction, and shall decrement by 512 for each 360 ° rotation of the drive reel when the tape is moved in the physical reverse direction. The diameter of the drive reel without tape should be 50,06 mm +0,00 mm - 0,05 mm.

The tach count shall be taken from tach counter C when tape is moving in the physical forward direction. The tach count shall be taken from tach counter M when tape is moving in the physical reverse direction.

14.4 Physical blocks

Information in the VCR and data regions shall be recorded on the tape as one of two types of physical blocks: mark physical blocks and data physical blocks.

A mark physical block shall contain no host data. It shall be used to indicate special conditions such as delimiters and format identification. The data content of the mark physical block is described in clause 16.

A data physical block shall contain logical block information.

An interblock gap shall be recorded before and after each physical block (see 19.2).

The mark and data physical blocks shall be made up of the following entities:

– code block;
– four-byte CRC;
– synchronisation character;
– resynchronisation burst;

© ISO/IEC 2000 – All rights reserved

Copyright International Organization for Standardization
Provided by IHS under license with ISO
No reproduction or networking permitted without license from IHS
Not for Resale

– acquisition burst;
– synchronisation burst interval;
– modulation triplet;
– modulation character.

14.5 Servo acquisition region

The servo acquisition region (SAQ) is used by the track following servo. The servo track format is described in clause 12. The servo acquisition region shall not contain recorded data information.

14.6 Volume control region

The volume control region (VCR) shall be located at the beginning of half-wrap 0 immediately following the servo acquisition region (SAQ). The VCR shall contain the following marks:

— Format identification (FID) mark: The FID mark shall be the first entity recorded on the tape. The FID shall identify the format that was used to write the data area of the physical volume. The FID shall also be the reference point from which distance along the tape is measured.

— Device block map (DBM) mark: The DBM mark shall immediately follow the FID mark and shall contain information which may be written and used by the system to determine the location of the partition, media defects, and recorded elements.

— Statistical analysis and reporting system (SARS) mark: The SARS mark shall immediately follow the DBM mark.

— DBM Valid mark: The DBM Valid mark, if present, shall immediately follow the SARS mark. The presence of the DBM valid mark shall indicate that the DBM mark is valid. When a cartridge is opened, this mark shall be overwritten by the DBM Checked Out mark.

— DBM Checked Out mark: The DBM Checked Out mark, if present, shall immediately follow the SARS mark. The presence of the DBM Checked Out mark shall indicate that the DBM mark is not valid. When the cartridge is closed, this mark shall be overwritten by the DBM Valid mark if the information in the DBM is accurate.

14.7 Data region

The data region shall be the portion of tape used to record data and marks. Nominally, it shall be located between logical point 1 and logical point 2 for the physical forward half-wraps, and between logical point 2 and logical point 3 for the physical reverse half-wraps.

All data and marks associated with the data region shall be contained within the area bounded by BOP and EOD. The data region shall contain the following entities:

– data physical block;
– BOP mark;
– BOW mark;
– EOW mark;
– EOD mark;
– SDM mark;
– File Mark
– Void mark;
– IBG.

14.8 Data entities

Data to be recorded shall be sent from a host computer to the drive in the form of logical blocks. See figure 25. The maximum logical block size shall be 2 097 152 bytes. A 4-byte CRC shall be appended to each logical block creating a protected logical block.

Protected logical blocks shall be broken into sub-blocks.

— If a protected logical block contains 229 380 bytes or less, then a single sub-block equal in size to the protected logical block shall be created.

— If a protected logical block contains more than 229 380 bytes, sub-blocks shall be created as required for the number of bytes in the protected logical block. Each sub-block of that protected logical block, except the last sub-block, shall contain 229 376 bytes. The last sub-block shall contain between 1 byte and 229 380 bytes.

All sub-blocks from one logical block shall be processed or unprocessed.

Each sub-block, or processed sub-block, shall be placed into one or two packets. The sub-block shall be broken into two packets only if the sub-block data will not all fit into the current device block. The first packet shall be placed into the current device block. The second packet shall be placed into the next device block.

© ISO/IEC 2000 – All rights reserved
Copyright International Organization for Standardization
Provided by IHS under license with ISO
No reproduction or networking permitted without license from IHS
Not for Resale

Packets containing logical block data shall be formed from sub-blocks by concatenating a packet header, a sub-block or portion of a sub-block, and a packet trailer. Packets containing mark data shall be formed by concatenating a packet header, the mark packet data, and a packet trailer.

Device blocks shall be formed from one or more packets by concatenating a device block header, the concatenated packets, and a device block trailer. The device block, with header and trailer, shall contain an integer multiple of minimum interleave units (MIUs), each of which shall be 6 144 bytes in size. If the total number of bytes in the device block header, packets, and device block trailer do not make an integer number of MIUs, then pad bytes shall be added to the device block trailer to complete the final MIU.

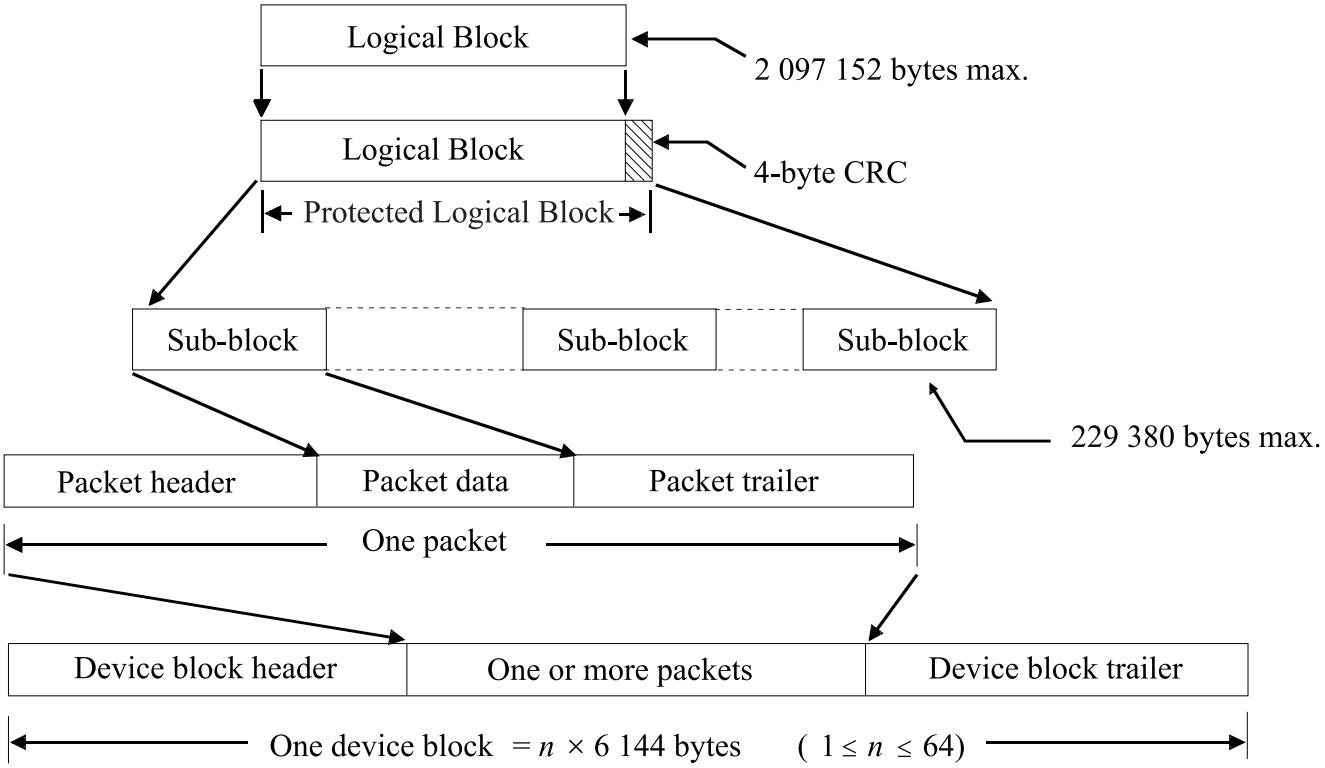

Figure 25 - Data Entities for Logical Block

A device block shall be divided into an integer number of MIUs. Refer to figure 26. The device block may be as small as 1 MIU (6 144 bytes), or as large as 64 MIUs (393 216 bytes) in size. Packets may cross MIU boundaries.

If a protected logical block requires more than one data packet, packets shall be placed into the current device block and subsequent device block(s), as required.

Each MIU shall be divided into eight 768-byte code blocks, each of which shall be organised as a 24 by 32 byte matrix. Each code block matrix shall be processed independently by the ECC circuitry to produce a 1 056-byte ECC encoded code block, which shall be organised as a 32 by 33 byte matrix.

The eight ECC encoded code blocks corresponding to one MIU shall be interleaved to produce an ECC encoded interleave unit (EEIU) of 8 448 bytes, which shall be organised as a 16 by 16 matrix of 33-byte entities.

The rows of the ECC encoded code block shall be minimum interleave elements (MIEs). The MIEs for the entire MIU shall be interleaved to form the ECC encoded interleave unit (EEIU).

The EEIUs shall be concatenated to form the ECC encoded physical block. Each row of the concatenated EEIU shall be assigned to one of sixteen data tracks.

Synchronising information shall be added to each data track as it is written to the tape.

--`,,```,,,,````-`-`,,`,,`,`,,`---
© ISO/IEC 2000 – All rights reserved
Copyright International Organization for Standardization
Provided by IHS under license with ISO
No reproduction or networking permitted without license from IHS
Not for Resale

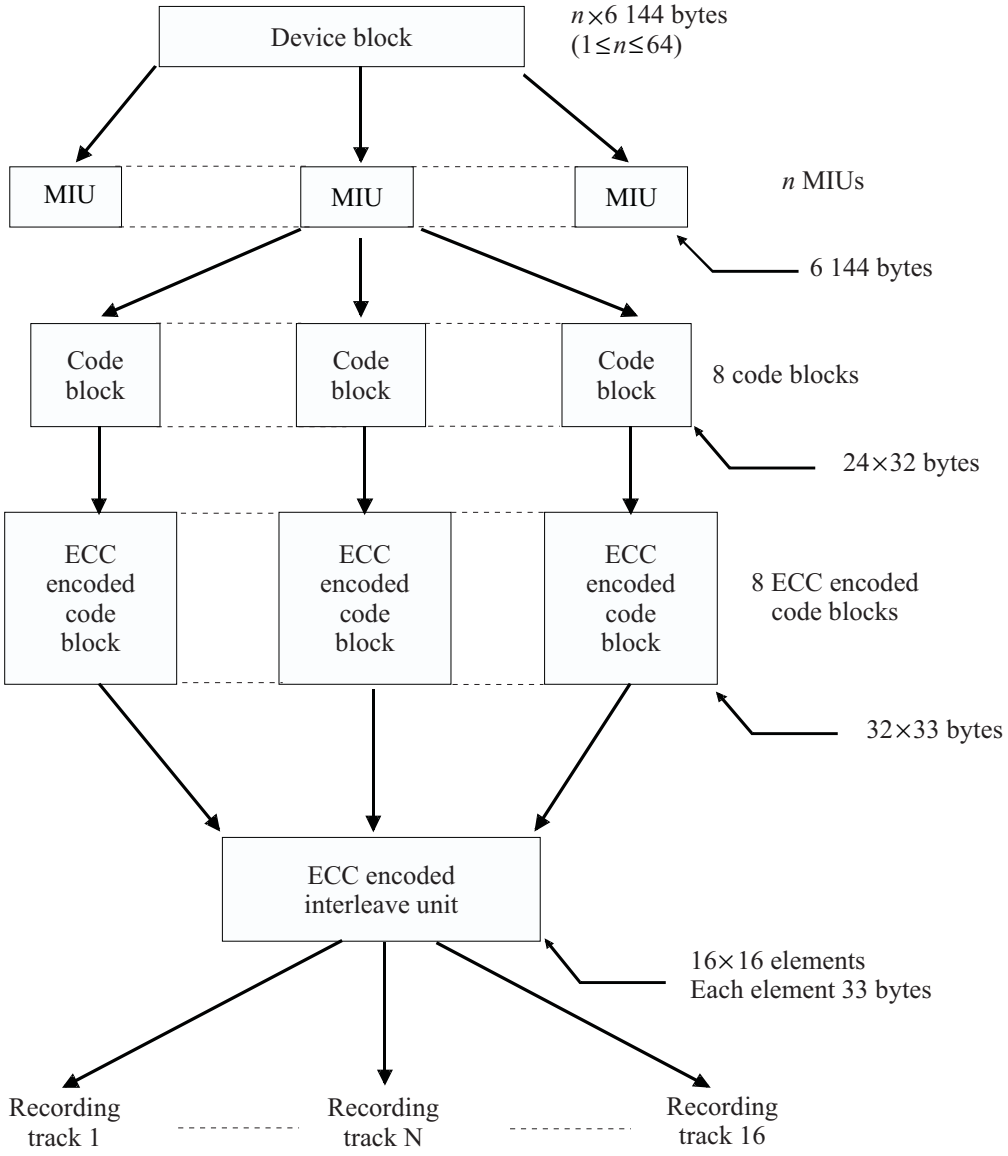

Figure 26 - Data Entities for Device Block

15 Packet format

Prior to formatting the user data for recording, sub-blocks shall be mapped into packets. These packets shall contain either unprocessed or processed data.

A data packet shall consist of:

– packet header;
– user data;
– packet trailer.

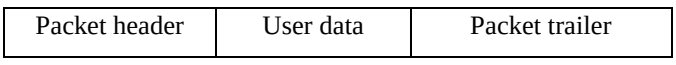

Figure 27 - Data Packet

Prior to formatting marks for recording, the marks shall be mapped into packets. These packets shall contain unprocessed mark data.

© ISO/IEC 2000 – All rights reserved
Copyright International Organization for Standardization
Provided by IHS under license with ISO
No reproduction or networking permitted without license from IHS
Not for Resale

A mark packet shall consist of:

— packet header;
— unprocessed mark data;
— packet trailer.

In both types of packet, the bytes of the packet shall be numbered consecutively, starting with 0 for the first byte of the packet header.

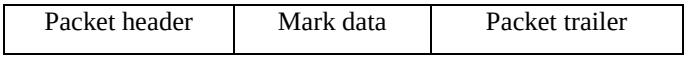

Figure 28 - Mark Packet

15.1 Packet header

A 32-byte packet header shall be the first bytes of the packet. Packet header bytes shall not be processed.

— **Byte 0:** This byte shall be set to (00).

— **Bytes 1 to 3:** These bytes shall be set to the sequential number of the first byte of the Packet Trailer within the packet.

— **Bytes 4 to 7:** These bytes shall be set to the logical block identifier. The logical block identifier shall be set to (00 00 00 00) for the first logical block within a partition. The logical block identifier shall be incremented by 1 for each subsequent logical block within a partition.

— If byte 10 is set to (FF), these bytes shall be set to the logical block identifier of the logical block which is fully or partially recorded in the packet.

— If byte 10 is set to (F0), these bytes shall be set to the logical block identifier of the File Mark.

— If byte 10 is set to a value other than (FF) or (F0), these bytes shall be set to (FF).

— **Byte 8:** Packet control flags 1: This byte shall be set to (00).

— **Byte 9:** Packet control flags 2:

For packet type (FF) :

Bit 0: This bit shall be set to:

ZERO if this is not the last packet header in the current device block;
ONE if this is the last packet header in the current device block.

Bit 1: This bit shall be set to ZERO.

Bit 2: The setting of this bit is not specified by this International Standard, it shall be ignored in interchange.

Bit 3: This bit shall be set to:

ZERO if the data in the packet data field was not processed;
ONE if the data in the packet data field was processed.

Bit 4: This bit shall be set to:

ZERO if the data in the packet data field does not contain all or part of the final sub-block of a logical block;
ONE if the data in the packet data field contains all or part of the final sub-block of a logical block.

Bit 5: This bit shall be set to:

ZERO if the data in the packet data field does not contain all or part of the first sub-block of a logical block;
ONE if the data in the packet data field contains all or part of the first sub-block of a logical block.

Bit 6: This bit shall be set to:

ZERO if the data in the packet data field does not contain the end of a sub-block;
ONE if the data in the packet data field contains the end of a sub-block.

Bit 7: This bit shall be set to:

ZERO if the data in the packet data field does not contain the start of a sub-block;
ONE if the data in the packet data field contains the start of a sub-block.

© ISO/IEC 2000 – All rights reserved

Copyright International Organization for Standardization
Provided by IHS under license with ISO
No reproduction or networking permitted without license from IHS
Not for Resale

For packet type other than (FF) :

Bit 0: This bit shall be set to:

ZERO if this is not the last packet header in the current device block;
ONE if this is the last packet header in the current device block.

Bits 1 to 3: These bits shall be set to ZERO.

Bits 4 to 7: These bits shall be set to ONE.

— **Byte 10:** This byte defines the packet type of each packet within a device block. See table 4.

Table 4 - Packet Type Identifiers

Packet Type	Packet Type Identifier
User data	(FF)
Void mark	(E0)
File Mark	(F0)
Beginning of half-wrap mark	(61)
End of half-wrap mark	(70)
Beginning of partition mark	(81)
End of data mark	(90)
Servo demark mark	(A1)
SARS	(30)
DBM general information	(21)
DBM beginning/middle of half-wrap block	(22)
DBM partition	(23)
DBM servo demark mark	(25)
DBM File Mark	(26)
FID	(11)
DBM checked out mark	(41)
DBM valid mark	(51)

— **Byte 11:** This byte shall indicate the algorithm used to process the user data in the packet data field.

(00) shall indicate that the data in the packet data field has not been processed;

(01) shall indicate that the data in the packet data field has been processed by the 1 024-byte processing algorithm, algorithm identification number 4, specified in Standard ISO/IEC 15200;

(FF) shall indicate that the data in the packet data field has been processed by an unknown algorithm.

— **Bytes 12 to 15**:

For packet type (FF) these bytes shall contain the CRC generated for the entire sub-block, before the sub-block is processed. These bytes shall be set to (00) in the first packet generated from a sub-block if the sub-block was broken into two packets.

For packet types other than (FF) these bytes shall be set to (00).

— **Byte 16:** This byte shall be set to (00).

— **Bytes 17 to 19:**

For packet type (FF) these bytes shall be set to the count of the number of bytes in the sub-block before processing, if any. These bytes shall be set to (00) in the first packet generated from a sub-block if the sub-block was broken into two packets.

© ISO/IEC 2000 – All rights reserved
Copyright International Organization for Standardization
Provided by IHS under license with ISO
No reproduction or networking permitted without license from IHS
Not for Resale

For packet types other than (FF) these bytes shall be set to (00).

— **Byte 20:** This byte shall be set to (00).

— **Bytes 21 to 23:** These bytes shall be set to the device block byte number of the start of the packet header of the previous packet in the device block. These bytes shall be set to (00) in the first packet in the device block.

— **Bytes 24 to 27:** These bytes shall contain the CRC generated for the sub-block after processing, if any. If processing is not applied, this value shall be the same as that is in bytes 12 to 15.

— These bytes shall be set to (00) in the first packet generated from a sub-block if the sub-block was broken into two packets.

— **Bytes 28 to 31:** These bytes shall contain the CRC generated over bytes 0 to 27 of the packet header.

15.2 Packet data

The packet data field contents shall be:

— a sub-block or a portion of a sub-block if the packet is a data packet;
— mark data if the packet is a mark packet.

15.3 Packet trailer

The packet trailer field shall comprise pad bytes and packet data CRC bytes.

— Pad bytes: These bytes, ranging from 0 to 31 in number, shall be added to the packet trailer to make the entire packet, including the header, data field, and trailer, an integer multiple of 32 bytes. Pad bytes shall be set to (00).

— CRC bytes: The 4-byte CRC shall be computed over all bytes of the data field of the packet and the pad bytes included in the trailer field. The CRC bytes shall be recorded as the last four bytes in the packet trailer.

16 Device blocks

One or more packets shall be mapped into a single device block. There shall be two types of device blocks: data device blocks and mark device blocks.

16.1 Data device blocks

Data device blocks shall be device blocks whose data fields contain host data. Each data device block shall contain one or more data packets, which shall be comprised of logical block data. Data device blocks shall be written only once without repetition.

16.2 Mark device blocks

Marks shall be used to define areas on the tape or to store information to be used by the drive.

Marks shall be formed from 8 instances of unique mark device blocks. The group of repeated physical blocks shall be referred to as a single mark. Each mark device block shall contain one or more mark packets.

Marks shall be created by the drive either independently or as the result of a host command. The mark device blocks shall not be processed.

Each of the 8 instances of a mark device block shall contain the same device block identifier and the same physical block number in their block header. Byte 9 of the block header shall contain the unique instance number for each mark device block.

There shall be 12 mark types:

– File Mark;
– Void;
– BOW;
– EOW;
– BOP;
– EOD;
– SDM;
– FID;
– SARS;
– DBM;
– DBM Checked Out;
– DBM Valid.

16.3 File Mark

The File Mark shall be written to denote the end of a file or aggregate.

The File Mark device block shall contain one packet with 28 bytes of data, all of which shall be set to (00).

© ISO/IEC 2000 – All rights reserved

Copyright International Organization for Standardization
Provided by IHS under license with ISO
No reproduction or networking permitted without license from IHS
Not for Resale

16.4 Void mark

Upon receipt of a host erase command, Void marks shall be written from the current position to the end of the current partition.

The Void mark device block shall contain one packet with 28 bytes of data, all of which shall be set to (00).

16.5 Beginning of half-wrap mark

The beginning of half-wrap mark (BOW) shall be written at the beginning of each half-wrap with the exception of half-wrap 0 and any other half-wrap that coincides with the beginning of a partition.

The BOW mark device block shall contain one packet with 28 bytes of data which shall be set as follows:

— **Bytes 0 to 2:** These bytes shall be set to (00).

— **Bytes 3 to 11:** These bytes shall be set to the values that are contained in bytes 11 to 19 of the corresponding EOW mark block sequence control field (See 17.1).

— **Bytes 12 to 15:** These bytes shall contain the tach offset. The tach offset shall be the value computed by subtracting the mark tach count of the previous EOW mark from the mark tach count of this BOW mark. The tach offset shall be stored as a two's-complement signed value.

— **Bytes 16 to 27:** These bytes shall be set to (00).

16.6 End of half-wrap mark

The end of half-wrap mark (EOW) shall be written at the end of a half-wrap that has been filled.

The EOW mark device block shall contain one packet with 28 bytes of data, all of which shall be set to (00).

If a half-wrap is not filled, then an EOD mark shall be written where writing of data stops and the EOW mark shall not be written for that half-wrap.

On the final half-wrap of the volume, the EOW mark shall not be written. End of volume processing shall result in an EOD mark being written even if the half-wrap is full.

If a half-wrap ending coincides with an end of partition, then no EOW mark shall be written. End of partition processing, which is equivalent to the end of volume processing, shall result in an EOD mark being written.

16.7 BOP mark

The beginning of partition mark (BOP) shall define the beginning of the partition.

The BOP mark device block shall contain one packet with 28 bytes of data set to (00).

16.8 EOD mark

The end of data mark (EOD) shall indicate that there is no more valid data in the current partition of the volume.

The EOD mark device block shall contain one packet with 28 bytes of data set to (00).

16.9 SDM mark

The servo demark marks (SDM) shall be used primarily to indicate a defective servo area, but may be used to indicate any area in which no valid user data is recorded.

There shall be three types of SDM marks:

— beginning SDM mark;
— middle SDM mark;
— end SDM mark.

The SDM mark set shall consist of a beginning SDM mark, any number including zero of middle SDM marks, followed by an end SDM mark. An SDM mark set shall be entirely contained in the same half-wrap. The user data that shall be recorded, if any, between a beginning SDM mark and the corresponding end SDM mark shall be considered to be invalid and shall be ignored in interchange.

The servo demark mark device block shall contain one packet with 28 bytes of data. The servo demark mark shall indicate the beginning, continuation, or end of a defective servo area as follows:

The minimum distance between SDMs shall be 10 cm.

The maximum distance between SDMs shall be 150 cm.

© ISO/IEC 2000 – All rights reserved
Copyright International Organization for Standardization
Provided by IHS under license with ISO
No reproduction or networking permitted without license from IHS
Not for Resale

— **Bytes 0 to 2**: These bytes shall be set to (00).

— **Byte 3:** This byte shall indicate the block subtype and shall be set to:

(00) if the servo demark mark is invalid;

(01) if the servo demark mark is a beginning servo demark mark;

(02) if the servo demark mark is a middle servo demark mark;

(03) if the servo demark mark is an end servo demark mark.

— **Byte 4:** This byte shall be set to (00).

— **Bytes 5 to 7:** These bytes shall contain the value of the forward tach offset.

For a beginning SDM, the value of the forward tach offset shall be the value computed by subtracting the mark tach count of this beginning SDM from the mark tach count of the following SDM.

For a middle SDM, the value of the forward tach offset shall be the value computed by subtracting the mark tach count of this middle SDM from the mark tach count of the following SDM.

For an end SDM, the value of the forward tach offset shall be set to (000000).

— **Byte 8:** This byte shall be set to (00).

— **Bytes 9 to 11:** These bytes shall contain the value of the reverse tach offset.

For a beginning SDM, the value of the reverse tach offset shall be set to (000000).

For a middle SDM, the value of the reverse tach offset shall be the value computed by subtracting the mark tach count of the previous SDM from the mark tach count of this middle SDM.

For an end SDM, the value of the reverse tach offset shall be the value computed by subtracting the mark tach count of the previous SDM from the mark tach count of this end SDM.

— **Bytes 12 to 27:** These bytes shall be set to (00).

16.10 FID mark

The format identification mark (FID) shall indicate the format of the information recorded on the tape. The FID mark shall be the first information written in the forward direction in the volume control region of the physical volume.

The FID mark device block shall contain one or two packets.

If the FID mark contains two packets, the first packet shall comprise 28 bytes of data, all of which shall be set to (00). The second packet shall comprise 64 bytes of data as described below.

If the FID mark contains one packet, the packet shall contain 64 bytes of data as described below.

— **Byte 0:** This byte shall be set to (74).

— **Byte 1:** This byte shall be set to (02).

— **Byte 2:** This byte shall be set to (06).

— **Byte 3:** This byte shall indicate if the SECC is enabled in the data region of the tape. This byte shall be set to:

(00) if the SECC is not enabled in the data region;
(01) if the SECC is enabled in the data region.

— **Bytes 4 and 5:** These bytes shall be set to (00).

— **Byte 6:** This byte shall be set to (00).

— **Byte 7:** This byte shall indicate the proportion of the tape that is available for use by the format described in this International Standard. Settings of this byte shall allow the logical repositioning of locations LP2 and EOT with respect to LP1 as defined by value l_{98}. See table 3.

When this byte is set to a value or within the range of values shown below, the logical location of LP2 shall be the specified portion of the physical location of LP2 with respect to LP1 as given in table 5.

© ISO/IEC 2000 – All rights reserved

Copyright International Organization for Standardization
Provided by IHS under license with ISO
No reproduction or networking permitted without license from IHS
Not for Resale

Table 5 - Proportion of tape available

Byte 7 value	Proportion available
(00)	100%
(C1) to (FF)	100%
(81) to (C0)	75%
(41) to (80)	50%
(01) to (40)	25%

— **Bytes 8 to 33:** These bytes shall be set to (00).

— **Bytes 34 and 35:** These bytes shall be set to (0001).

— **Bytes 36 to 59:** These bytes shall be set to (00).

— **Bytes 60 to 63:** These bytes shall contain the CRC generated over Bytes 0 to 59 of the FID mark data field.

16.11 DBM mark

The DBM mark shall immediately follow the FID mark and shall contain information which may be written and used by the system to determine the location of partitions, media defects, and recorded elements.

The DBM mark shall contain five packets in the following order:

— DBM general information packet;
— wrap region packet;
— partitions packet;
— servo demark packet;
— File Mark packet.

16.11.1 DBM general information packet

The DBM general information packet shall contain information about the number of elements contained in the remaining packets in the DBM mark.

The DBM general information packet shall contain 28 bytes of mark data.

— **Bytes 0 to 3:** These bytes shall be set to (00).

— **Byte 4:**

Bits 0 to 2: These bits shall be set to ZERO.

Bit 3: This bit shall be set to:

ZERO if the number of SDM sets does not exceed 512;
ONE if the number of SDM sets exceeds 512.

Bit 4: This bit shall be set to:

ZERO if the number of File Marks does not exceed 1 024;
ONE if the number of File Marks exceeds 1 024.

Bits 5 to 7: These bits shall be set to ZERO.

— **Byte 5:** This byte shall be set to (80), indicating the number of wrap region entries recorded in the DBM wrap region packet.

— **Bytes 6 and 7:** These bytes shall be set to (0001), indicating one partition entry is recorded in the DBM partition packet.

— **Bytes 8 and 9:** These bytes shall be set to the number of SDM set entries recorded in the DBM servo demark packet.

— **Bytes 10 and 11:** These bytes shall be set to the number of File Mark entries recorded in the DBM File Mark packet.

— **Bytes 12 to 27:** These bytes shall be set to (00).

© ISO/IEC 2000 – All rights reserved
Copyright International Organization for Standardization
Provided by IHS under license with ISO
No reproduction or networking permitted without license from IHS
Not for Resale

16.11.2 DBM wrap region packet

The DBM wrap region packet shall contain location information for the half-wraps recorded on the tape.

Each half-wrap shall be logically divided into 16 equally spaced regions between LP1 and EOT. Regions shall be numbered 0 to 15. Region numbers shall increase in the logical forward direction. Region locations shall not be altered by logical repositioning of LP2 by FID mark byte 7.

The data field of the DBM wrap region packet shall be a field comprising 2 048 bytes. The data field shall contain 16 contiguous bytes of information for each half-wrap region. The data for each 16-byte half-wrap entry shall be:

— **Bytes 0 to 3:** These bytes shall be set to the value of the logical block identifier of the first logical block which is recorded in that region.

— **Byte 4:** This byte shall be set to the value of the device block (see table 6) type of the first device block which is recorded in that region.

— **Bytes 5 to 7:** These bytes shall be set to the value of the device block identifier of the first device block which is recorded in that region.

— **Byte 8:** This byte shall be set to the value of the half-wrap number.

— **Bytes 9 to 11:** These bytes shall be set to the value of the device block tach count of the first device block that is recorded in this region, divided by 16.

— **Byte 12:**

Bit 0: This bit shall be set to:

ZERO if the region is not between BOP and EOD;
ONE if the region is between BOP and EOD.

Bits 1 to 7: These bits shall be set to ZERO.

— **Byte 13:** This byte shall be set to the value of the region number.

— **Bytes 14 and 15:** These bytes shall be set to (00).

16.11.3 DBM partitions packet

The DBM partitions packet shall contain information about the partitions recorded on the tape.

The data field of the DBM partitions packet shall be 32 bytes. The data for the partition entry shall be:

— **Bytes 0 to 7:** These bytes shall be set to (00).

— **Byte 8:**

Bits 0 and 1: These bits shall be set to ZERO.

Bit 2: This bit shall be set to:

ZERO if the partition does not contain a BOP mark;
ONE if the partition contains a BOP mark.

Bit 3: This bit shall be set to:

ZERO if the partition does not contain an EOD mark;
ONE if the partition contains an EOD mark.

Bit 4: This bit shall be set to:

ZERO if the DBM mark information is not valid for the partition;
ONE if the DBM mark information is valid for the partition.

Bit 5: The setting of this bit is not defined in this International Standard. It shall be ignored in interchange.

Bit 6: This bit shall be set to:

ZERO if the partition is not permanently write-protected;
ONE if the partition is permanently write-protected.

If this bit is set to ONE no future write shall reset this bit to ZERO.

© ISO/IEC 2000 – All rights reserved

Copyright International Organization for Standardization
Provided by IHS under license with ISO
No reproduction or networking permitted without license from IHS
Not for Resale

Bit 7: This bit shall be set to:

ZERO if the partition is not temporarily write-protected;
ONE if the partition is temporarily write-protected.

If this bit is set to ONE future writes may reset this bit to ZERO.

— **Bytes 9 to 11:** These bytes shall be set to (00).

— **Byte 12:** This byte shall be set to the value of the half-wrap in which the BOP mark is recorded.

— **Bytes 13 to 15:** These bytes shall be set to the value of the mark tach count divided by 16 at which the BOP mark is recorded.

— **Byte 16:** This byte shall be set to the value of the half-wrap in which the EOD mark is recorded.

— **Bytes 17 to 19:** These bytes shall be set to the value of the mark tach count divided by 16 at which the EOD mark is recorded.

— **Bytes 20 to 23:** These bytes shall be set to the value of the logical block identifier of the EOD mark, which is that recorded in Bytes 20 to 23 of the device block header (See 17.1.1, Bytes 20 to 23).

— **Byte 24:** This byte shall be set to (00).

— **Bytes 25 to 27:** These bytes shall be set to the value of the device block identifier of the EOD mark, which is that recorded in Bytes 13 to 15 of the device block header.

— **Bytes 28 to 31:** These bytes shall be set to (00).

16.11.4 DBM servo demark packet

The DBM servo demark packet shall contain information about the first 512 SDMs recorded on the tape.

The data field of the DBM servo demark packet shall be a variable length field. The field length may be zero bytes up to a maximum of 8 192 bytes, in integer multiples of 16 bytes.

The data field shall contain 16 contiguous bytes of information for each SDM set for which information is recorded in the DBM mark.

The data for each 16-byte SDM entry shall be:

— **Bytes 0 to 3:** These bytes shall be set to the value of the logical block identifier of the beginning SDM of the set, which is that recorded in Bytes 20 to 23 of the device block header.

— **Byte 4:** This byte shall be set to the value of the device block identifier of the beginning SDM subtracted from the device block identifier of the end SDM.

— **Bytes 5 to 7:** These bytes shall be set to the value of the device block identifier of the beginning SDM.

— **Byte 8:** This byte shall be set to the value of the half-wrap number in which the beginning SDM is recorded.

— **Bytes 9 to 11:** These bytes shall be set to the value of the mark tach count of the beginning SDM divided by 16.

— **Byte 12:** This byte shall be set to (00).

— **Bytes 13 to 15:** These bytes shall be set to the value of the mark tach count of the end SDM divided by 16.

16.11.5 DBM File Mark packet

The DBM File Mark packet shall contain information about the first 1 024 File Marks recorded on the tape.

The data field of the DBM File Mark packet shall be a variable length field. The field length, expressed in bytes, may be 0 or an integer multiple of 16, up to a maximum length of 16 384.

The data field shall contain 16 contiguous bytes of information for each File Mark for which information is recorded in the DBM mark.

— **Bytes 0 to 3:** These bytes shall be set to the value of the logical block identifier of the File Mark, which are bytes 20 to 23 of the device block header.

— **Byte 4:** This byte shall be set to (00).

© ISO/IEC 2000 – All rights reserved
Copyright International Organization for Standardization
Provided by IHS under license with ISO
No reproduction or networking permitted without license from IHS
Not for Resale

— **Bytes 5 to 7:** These bytes shall be set to the value of the device block identifier of the File Mark, which are bytes 13 to 15 of the device block header.

— **Byte 8:** This byte shall be set to the value of the half-wrap number in which the File Mark is recorded.

— **Bytes 9 to 11:** These bytes shall be set to the value of the mark tach count of the File Mark divided by 16.

— **Bytes 12 and 13:** These bytes shall be set to the value of the partition number in which the File Mark is recorded.

— **Bytes 14 and 15:** These bytes shall be set to (00).

16.12 SARS mark

The data field of the SARS mark device block shall have one packet, the volume summary packet. The contents of the volume summary packet data field shall be ignored in interchange.

16.13 DBM checked out mark

The DBM checked out mark shall indicate that the DBM mark has not been updated to reflect all changes that may have been made. The DBM checked out mark, if present, shall be the final mark in the volume control region.

If the physical volume is not write-protected, this mark shall be written on the tape when the volume control region is read when the cartridge is loaded. The DBM checked out mark shall be overwritten by the DBM valid mark during a normal volume closing process.

If the physical volume is write-protected, the DBM checked out mark shall be neither written nor overwritten.

The DBM checked out mark device block shall contain one packet with 28 bytes of data, all of which shall be set to (00).

16.14 DBM valid mark

The DBM valid mark shall indicate that the DBM mark has been updated to reflect all changes that may have been made. The DBM valid mark, if present, shall be the final mark in the volume control region.

If the physical volume is not write-protected, this mark shall be written on the tape during a normal volume closing process. The DBM valid mark shall be overwritten by the DBM checked out mark during a normal volume opening process.

If the physical volume is write-protected, the DBM valid mark shall be neither written nor overwritten.

The DBM valid mark device block shall contain one packet with 28 bytes of data, all of which shall be set to (00).

17 Device block format

Packets shall be placed into device blocks. One or more packets shall be mapped into a single device block. A device block shall contain either data packets or mark packets but shall not contain both types. A packet shall not be split into two device blocks.

A device block shall consist of:

— a device block header;
— one or more packets;
— a device block trailer.

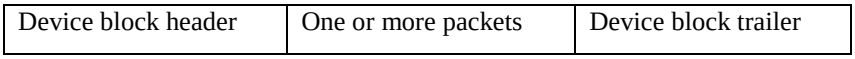

Figure 29 - Device Block

17.1 Device block header

A 96-byte device block header shall be the first bytes of a device block. The device block header bytes shall not be processed.

The device block header shall contain the following three 32-byte sub-fields:

— a device block control;
— a device block sequence control;
— a Vendor identification code.

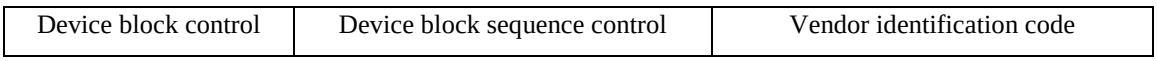

Figure 30 - Device Block Header

© ISO/IEC 2000 – All rights reserved

Copyright International Organization for Standardization
Provided by IHS under license with ISO
No reproduction or networking permitted without license from IHS
Not for Resale

17.1.1 Device block control

— **Byte 0:** This byte shall be set to (00).

— **Bytes 1 to 3:** These bytes shall be set to the device block byte number of the first byte of the device block trailer field.

— **Byte 4:** This byte shall be set to the number of MIUs that are contained in the device block.

— **Byte 5:** Device block control flags

Bits 0 to 2: These bits shall be set to ZEROs.

Bits 3 and 4: These bits shall identify the device block subtype.

For a servo demark mark, these bits shall be set to:

– ZERO–ZERO if the servo demark mark is invalid;
– ZERO–ONE if the servo demark mark is a beginning servo demark mark;
– ONE–ZERO if the servo demark mark is a middle servo demark mark;
– ONE–ONE if the servo demark mark is an end servo demark mark.

For an end of data mark, the setting of these bits is not specified in this International Standard. They shall be ignored in interchange.

For all other marks, these bits shall be set to ZERO–ZERO.

Bit 5: This bit shall be set to ZERO.

Bit 6:

For device block type (FF) this bit shall be set to:

ZERO if the first packet in the device block data field contains the start of a sub-block; ONE if the first packet in the device block data field does not contain the start of a sub-block.

For device block types (60), (70), and (A0), this bit shall be set as bit 6 in the next device block.

For all other device block types this bit shall be set to ZERO.

Bit 7:

For device block type (FF) this bit shall be set to:

ZERO if the last packet in the device block data field contains the end of a sub-block; ONE if the last packet in the device block data field does not contain the end of a sub-block.

For device block type (60), (70), and (A0), this bit shall be set as bit 7 in the previous device block.

For all other device block types this bit shall be set to ZERO.

— **Bytes 6 and 7:** These bytes shall be set to the value of the number of packets within the device block data field.

— **Byte 8:** This byte shall be set to (00) for a data device block, or to (07) for a mark device block.

— **Byte 9:** This byte shall be set to the value of the device block repetition.

For data device blocks this byte shall be set to (00).

For mark device blocks this byte shall be set to the number of the mark device block within the current mark. The number shall be set to 0 for the first mark device block within the mark, and shall be incremented by one for each subsequent mark device block within the current mark.

— **Byte 10:** This field shall specify the type of packets within the device block. See table 6.

© ISO/IEC 2000 – All rights reserved
Copyright International Organization for Standardization
Provided by IHS under license with ISO
No reproduction or networking permitted without license from IHS
Not for Resale

Table 6 - Device Block Identifiers

Device block type	Device block identifier
Logical block	(FF)
Void mark	(E0)
File Mark	(F0)
Beginning of half-wrap mark	(60)
End of half-wrap mark	(70)
Beginning of partition mark	(80)
End of data mark	(90)
Servo demark mark	(A0)
SARS	(30)
DBM mark	(20)
FID mark	(10)
DBM checked out mark	(40)
DBM valid mark	(50)

— **Bytes 11 and 12:** These bytes shall be set to (00).

— **Bytes 13 to 15:** These bytes shall be set to the value of the current device block identifier. All 8 mark device blocks within a single mark shall have the same device block identifier.

The device block identifier shall be set to (000000) for the first device block within a partition. The device block identifier shall be incremented by one for each subsequent device block within the current partition.

— **Byte 16:** This byte shall be set to (00).

— **Bytes 17 to 19:**

For device blocks of device block type (FF) these bytes shall be set to the value of the device block byte number of the first byte of the packet that has the start of the last logical block in the device block. If no logical block begins in the device block then these bytes shall be set to (FF) .

For all other device block types these bytes shall be set to (00) .

— **Bytes 20 to 23:**

For device blocks of type (FF) and (F0) these bytes shall be set to the value of the logical block identifier of the first logical block that is fully or partially contained within the current device block. The logical block identifier shall be set to (00000000) for the first logical block within a partition. The logical block identifier shall be incremented by one for each subsequent logical block within a partition.

For device blocks of type (10), (20), (30), (40), and (50), these bytes shall be set to (FF).

For device blocks of type (E0) and (90) these bytes shall be set to the value contained in device block control bytes 20 to 23 plus the value in the device block control bytes 24 to 25 of the previous device block.

For all other device block types these bytes shall be set to the value contained in device block control bytes 20 to 23 of the next device block.

— **Bytes 24 and 25:**

For device blocks of type (FF) these bytes shall be set to the value of the number of logical blocks that are fully or partially contained within the current device block.

For device blocks of type (E0) and (F0) these bytes shall be set to (0001) .

For device blocks of all other types these bytes shall be set to (0000) .

— **Bytes 26 and 27:** These bytes shall be set to the value of the current partition number. The first partition number shall be (0000) and shall be incremented by one for each subsequent partition.

— **Bytes 28 to 31:** These bytes shall be set to the CRC generated over bytes 0 to 27 of the device block control field.

© ISO/IEC 2000 – All rights reserved

Copyright International Organization for Standardization
Provided by IHS under license with ISO
No reproduction or networking permitted without license from IHS
Not for Resale

17.1.2 Device block sequence control

— **Byte 0:** The setting of this byte is not specified in this International Standard. It shall be ignored in interchange.

— **Bytes 1 to 3:** The setting of these bytes is not specified in this International Standard. They shall be ignored in interchange.

— **Byte 4:** This byte shall be set to (00).

— **Byte 5:** This shall be set to the value of the half-wrap number. The first half-wrap is number (00).

— **Bytes 6 to 10:** These bytes shall be set to (00).

— **Bytes 11 to 19***:* The setting of these bytes is not specified in this International Standard. They shall be ignored in interchange.

— **Bytes 20 and 21:** These bytes shall be set to the value of the count that exists at the time the device block is written of the total number of times that the cartridge has been loaded while not write-protected. The initial value shall be set to (0000) and shall be incremented by one for each subsequent cartridge load while not file protected. The next increment after (FFFF) shall be (0000).

— **Bytes 22 to 27:** These bytes shall be set to (00).

— **Bytes 28 to 31:** These bytes shall be set to the CRC generated over bytes 0 to 27 of the device block sequence control field.

17.1.3 Vendor identification code

— **Bytes 0 to 7:** These bytes shall specify a Vendor identification code recorded as specified in annex D.

— **Bytes 8 to 27:** The setting of these bytes is not specified by this International Standard. They shall be ignored in interchange.

— **Bytes 28 to 31:** These bytes shall contain the CRC generated over bytes 0 to 27 of the vendor identification code field.

17.2 Device block data

The device block data field shall contain one or more packets of the same packet type.

17.3 Device block trailer

The device block trailer shall be the last bytes of a device block. The device block trailer shall be a variable length field. It shall consist of 96 bytes which shall be an exact repeat of the 96-byte device block header, preceded by the number of pad bytes necessary, if any, to make the number of bytes in the entire device block equal to an integer multiple of MIUs. Pad bytes shall be set to (00).

18 ECC

The ECC transforms device blocks into ECC encoded physical blocks.

Throughout this section, the term “data” refers to any information that is exclusive of error control code information. This includes logical block data, mark data, control, and pad bytes.

18.1 CRC

The CRC shall be a Reed-Solomon (*N*, *N*-4) code over GF(256).

The GF(256) calculation shall be defined by:

$G(x) = x^8 + x^4 + x^3 + x^2 + 1$

A primitive element α in GF(256) shall be:

$\alpha = (0 \quad 0 \quad 0 \quad 0 \quad 0 \quad 0 \quad 1 \quad 0)$

$\alpha^7 \quad \alpha^6 \quad \alpha^5 \quad \alpha^4 \quad \alpha^3 \quad \alpha^2 \quad \alpha^1 \quad \alpha^0$

The generator polynomial shall be:

$G(x) = x^4 + \alpha^{201}x^3 + \alpha^{246}x^2 + \alpha^{201}x + \alpha^0$

The CRC bytes shall be generated by a generator circuit whose registers shall be set to ZEROs prior to beginning processing. See figure 31. Registers R0 to R3 are 8 bits wide. Data bytes shall be fed sequentially into the encoder. Then the contents of

© ISO/IEC 2000 – All rights reserved
Copyright International Organization for Standardization
Provided by IHS under license with ISO
No reproduction or networking permitted without license from IHS
Not for Resale

R3 shall be CRC3, that of R2 shall be CRC2, that of R1 shall be CRC1, and that of R0 shall be CRC0. When these CRC bytes are appended to data bytes or placed in any field, CRC3 shall be the first byte appended, followed by CRC2, CRC1, and then CRC0.

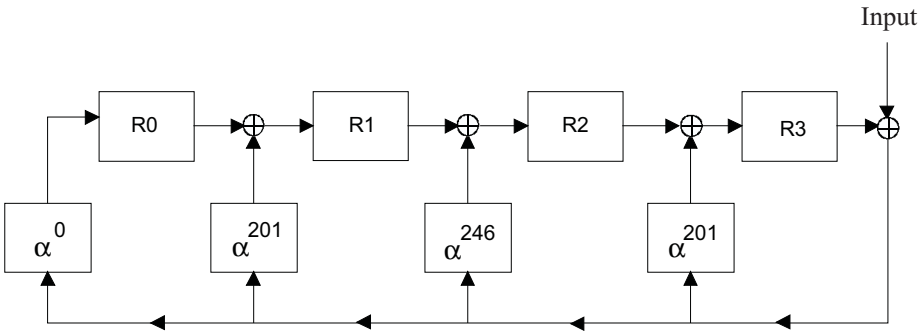

Figure 31 - CRC shift register

18.2 Code block

The code block shall be the basic data unit which is processed by the ECC algorithm. The code block shall contain 768 bytes organised as a 24 by 32 byte matrix. The bytes of the code block may be any combination of data, control, or pad bytes. Eight code blocks shall be constructed from each MIU.

The eight code blocks shall be filled by placing the first MIU byte into row 1, column 1 of the first code block. Byte 24 shall be placed in row 24, column 1. Byte 25 shall be placed in row 1, column 2. The first code block shall be filled completely before any data is placed in the second code block. This shall result in the first byte of the MIU being placed in row 1, column 1 of the first code block, and the final byte of the MIU being placed in row 24, column 32 of the final code block.

18.3 ECC encoded code block

The ECC encoded code block shall be the result of processing a code block by the ECC algorithm. The ECC encoded code block shall contain 1 056 bytes organised as a 32 by 33 matrix. See figure 32.

The ECC encoded code block shall be comprised of the following items:

— Minimum Interleave Element (MIE): An MIE shall be any one row of the ECC encoded code block;

— Codeword: A Codeword shall be any of the first 32 columns of the ECC encoded code block;

— MIE Pointer: The MIE Pointer shall be a column 33 of the ECC encoded code block

Rows 1 to 24 and columns 1 to 32 of the ECC encoded code block shall contain the code block bytes in the same row and column positions that they occupy in the code block.

Each 24-byte column of the 32-column code block shall be passed through ECC circuitry to generate 8 correction code bytes, which shall be placed in rows 25 to 32 of the ECC encoded code block.

Each 32-byte row of the 32-row ECC encoded code block shall be passed through ECC circuitry to generate one error detection code byte, which shall be placed in column 33 of the ECC encoded code block.

© ISO/IEC 2000 – All rights reserved

Copyright International Organization for Standardization
Provided by IHS under license with ISO
No reproduction or networking permitted without license from IHS
Not for Resale

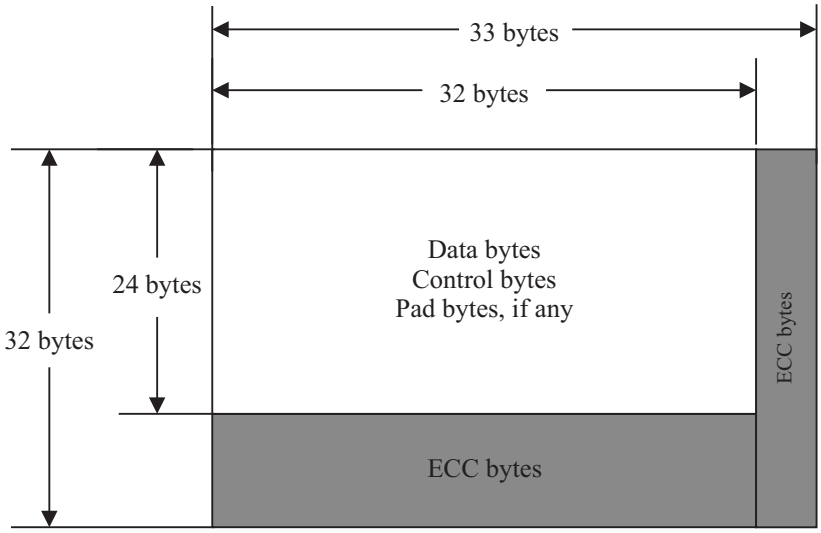

Figure 32 - ECC Encoded Code Block

18.4 Codeword correction code generation

Each column of the ECC encoded code block shall consist of 24 data bytes and 8 ECC bytes, which are referred to as the codeword correction code. The ECC shall be a Reed-Solomon (32, 24) code over GF(256).

The GF(256) calculation shall be defined by:

$G(x) = x^8 + x^4 + x^3 + x^2 + 1$

A primitive element α in GF(256) shall be:

$\alpha = (0 \quad 0 \quad 0 \quad 0 \quad 0 \quad 0 \quad 1 \quad 0)$

$\alpha^7 \quad \alpha^6 \quad \alpha^5 \quad \alpha^4 \quad \alpha^3 \quad \alpha^2 \quad \alpha^1 \quad \alpha^0$

The generator polynomial shall be:

$G(x) = x^8 + \alpha^{176} x^7 + \alpha^{240} x^6 + \alpha^{211} x^5 + \alpha^{253} x^4 + \alpha^{220} x^3 + \alpha^3 x^2 + \alpha^{203} x + \alpha^{36}$

The ECC bytes shall be generated by a generator circuit whose registers shall be set to ZEROs prior to beginning processing. See figure 33. Registers R0 to R7 are 8 bits wide. Data bytes shall be fed sequentially into the encoder. Then the contents of R7 is ECC7, that of R6 is ECC6, and so forth to ECC0. When these ECC bytes are appended to data bytes or placed in any field, CRC7 shall be the first byte appended, followed by ECC6, and so forth to ECC0.

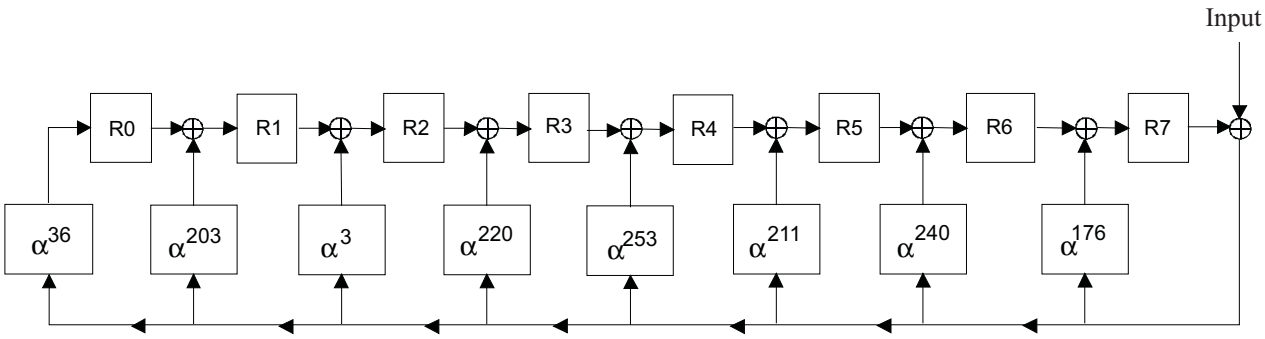

Figure 33 - ECC shift register

© ISO/IEC 2000 – All rights reserved
Copyright International Organization for Standardization
Provided by IHS under license with ISO
No reproduction or networking permitted without license from IHS
Not for Resale

18.5 MIE pointer code generation

Each row of the ECC encoded code block shall consist of 32 data or ECC bytes and 1 EDC byte, which shall be referred to as the MIE pointer correction code. The EDC shall be a Reed-Solomon (33, 32) code over GF(256).

The GF(256) calculation shall be defined by:

$G(x) = x^8 + x^4 + x^3 + x^2 + 1$

A primitive element α in GF(256) shall be:

$\alpha = (0 \quad 0 \quad 0 \quad 0 \quad 0 \quad 0 \quad 1 \quad 0)$

$\alpha^7 \quad \alpha^6 \quad \alpha^5 \quad \alpha^4 \quad \alpha^3 \quad \alpha^2 \quad \alpha^1 \quad \alpha^0$

The generator polynomial shall be:

$G(x) = x + \alpha^1$

18.6 ECC encoded interleave unit

The rows of the 8 ECC encoded code blocks, which correspond to one MIU, shall be interleaved to form the ECC encoded interleave unit (EEIU). The EEIU shall be a 16 by 16 matrix each entry of which is a 33-byte MIE.

If each of the 8 code blocks shall be assigned an identifier A to H, where code block A shall contain the first bytes of the MIU and code block H shall contain the last bytes of the MIU, then each row of each ECC encoded code block shall be identified by its code block letter and its row number.

The arrangement of the ECC encoded code blocks after interleaving shall be as shown in figure 34. Each row of the ECC encoded interleave unit shall be assigned to its correspond recording track. Row 1 shall be assigned to track 1. Row 16 shall be assigned to track 16.

A1	B1	C1	D1	E1	F1	G1	H1	A2	B2	C2	D2	E2	F2	G2	H2
B3	C3	D3	E3	F3	G3	H3	A3	B4	C4	D4	E4	F4	G4	H4	A4
C5	D5	E5	F5	G5	H5	A5	B5	C6	D6	E6	F6	G6	H6	A6	B6
H15	A15	B15	C15	D15	E15	F15	G15	H16	A16	B16	C16	D16	E16	F16	G16
A17	B17	C17	D17	E17	F17	G17	H17	A18	B18	C18	D18	E18	F18	G18	H18
G29	H29	A29	B29	C29	D29	E29	F29	G30	H30	A30	B30	C30	D30	E30	F30
H31	A31	B31	C31	D31	E31	F31	G31	H32	A32	B32	C32	D32	E32	F32	G32

Figure 34 - ECC Encoded Interleave Unit

18.7 Short error correction code generation

The short error correction code (SECC) shall be the result of processing eight sequential MIEs in a given EEIU row, starting with the first MIE in the row.

The use of SECC in the data region shall be optional. The use of SECC in the VCR region shall be mandatory. A flag bit in the FID shall indicate if the SECC is enabled in the data region.

© ISO/IEC 2000 – All rights reserved

Copyright International Organization for Standardization
Provided by IHS under license with ISO
No reproduction or networking permitted without license from IHS
Not for Resale

Each short error correction code interval shall consist of 264 data bytes and 8 ECC bytes.

The SECC shall be a Reed-Solomon (136, 132) code over GF(256). All odd bytes in the 272 byte stream shall form one (136, 132) codeword and the even bytes shall form the other codeword. The 264 data bytes shall be placed along the track in sequence, bytes 1 to 264, followed by the interleaved ECC bytes SECC7 to SECC0 after the eighth MIE of each eight MIE group. See figure 39.

The GF(256) calculation shall be defined by:

$G(x) = x^8 + x^4 + x^3 + x^2 + 1$

A primitive element α in GF(256) shall be:

$\alpha = (0 \quad 0 \quad 0 \quad 0 \quad 0 \quad 0 \quad 1 \quad 0)$

$\alpha^7 \quad \alpha^6 \quad \alpha^5 \quad \alpha^4 \quad \alpha^3 \quad \alpha^2 \quad \alpha^1 \quad \alpha^0$

The generator polynomial shall be:

$G(x) = x^4 + \alpha^{74}x^3 + \alpha^{247}x^2 + \alpha^{75}x + \alpha^2$

The SECC odd bytes shall be generated by a generator circuit whose registers shall be set to ZEROs prior to beginning processing. See figure 35. All registers R_n are 8 bits wide. Odd data bytes shall be fed sequentially into the encoder. Then the contents of R7 shall be SECC7, that of R5 shall be SECC5, that of R3 shall be SECC3, and that of R1 shall be SECC1.

The SECC even bytes shall be generated by a generator circuit whose registers shall be set to ZEROs prior to beginning processing. See figure 36. All registers R_n are 8 bits wide. Even data bytes shall be fed sequentially into the encoder. Then the contents of R6 shall be SECC6, that of R4 shall be SECC4, that of R2 shall be SECC2, and that of R0 shall be SECC0.

When these SECC bytes are appended to data bytes or placed in any field, SECC7 shall be the first byte appended, followed by SECC6, and so forth to SECC0.

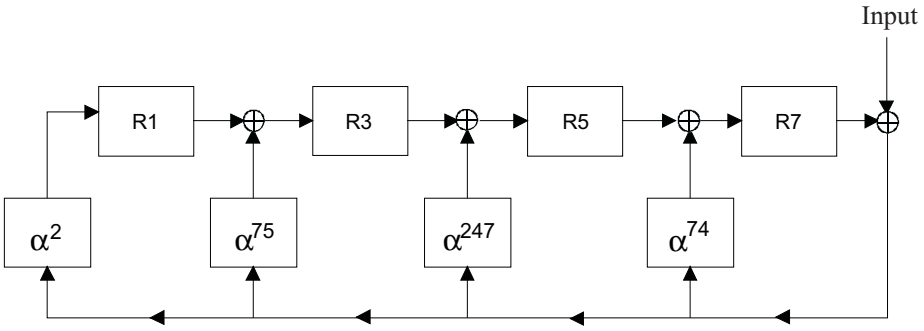

Figure 35 - SECC Odd Bytes shift register

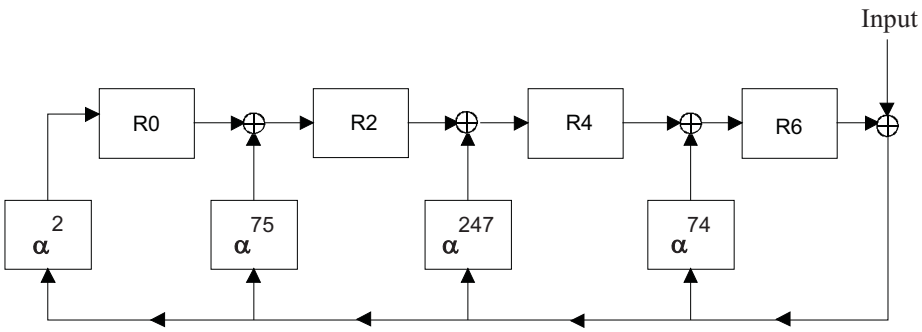

Figure 36 - SECC Even Bytes shift register

© ISO/IEC 2000 – All rights reserved
Copyright International Organization for Standardization
Provided by IHS under license with ISO
No reproduction or networking permitted without license from IHS
Not for Resale

19 Recording of bytes on tape

The byte stream written to each data track shall be formed by adding synchronising information to the corresponding row from each of the ECC encoded interleave units with the SECC, if used.

Each byte stream containing synchronising information shall be a synchronised physical track. The aggregate of synchronised physical tracks corresponding to one device block shall be a synchronised physical block.

19.1 Synchronisation format

The synchronisation format shall consist of three entities.

— acquisition burst: which shall consist of 30 instances of the character (33). The acquisition burst shall occur at the beginning and end of each synchronised physical track.

— resynchronisation burst: which shall consist of 10 instances of the character (33). The resynchronisation burst shall occur between each group of 16 MIEs per track which corresponds to one EEIU across all tracks. See figure 37 and figure 38.

— synchronisation characters: which shall consist of one of 12 characters. See table 7.

The synchronisation characters by track shall occur after the beginning acquisition burst, after each pair of interleaved MIEs, after resynchronisation bursts, and before the final acquisition burst. Synchronisation characters shall be placed as shown in figure 40 to figure 42.

If the device block is short, there may not be enough bursts to require all ten FSC and BSC. In this case, only the necessary number of FSCs and BSCs shall be written. Figure 43 illustrates placement of synchronisation characters for device blocks of one and two MIUs in size. Figure 44 illustrates placement of synchronisation characters for a device block of three MIUs in size.

Table 7 - Sync Characters

Sync character	Name	Value
Forward sync character 1	FSC1	(5834)
Forward sync character 2	FSC2	(6DF2)
Forward sync character 3	FSC3	(42AA)
Forward sync character 4	FSC4	(4B62)
Forward sync character 5	FSC5	(5F0A)
Forward resync character	FRC	(30CA)
Reverse resync character	BRC	(530C)
Reverse sync character 1	BSC1	(2C7A)
Reverse sync character 2	BSC2	(4E3A)
Reverse sync character 3	BSC3	(5542)
Reverse sync character 4	BSC4	(5ED2)
Reverse sync character 5	BSC5	(50E2)

© ISO/IEC 2000 – All rights reserved

Copyright International Organization for Standardization
Provided by IHS under license with ISO
No reproduction or networking permitted without license from IHS
Not for Resale

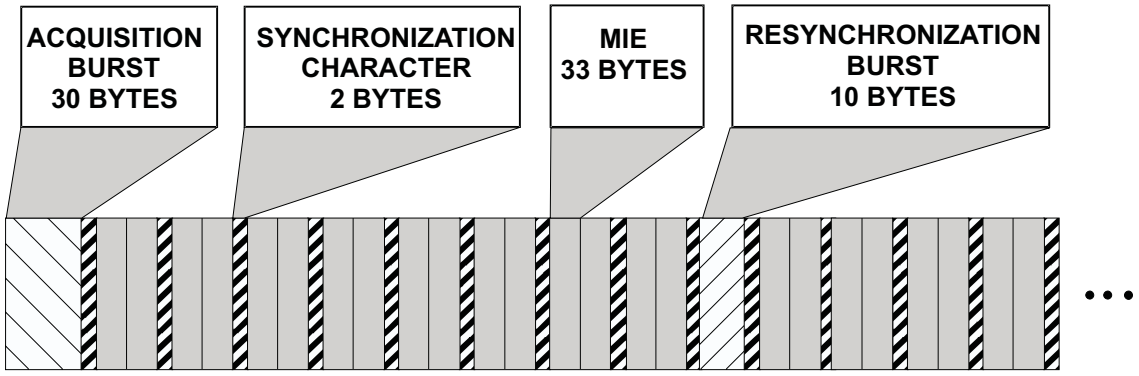

Figure 37 - Positioning of Synchronising Features – Beginning

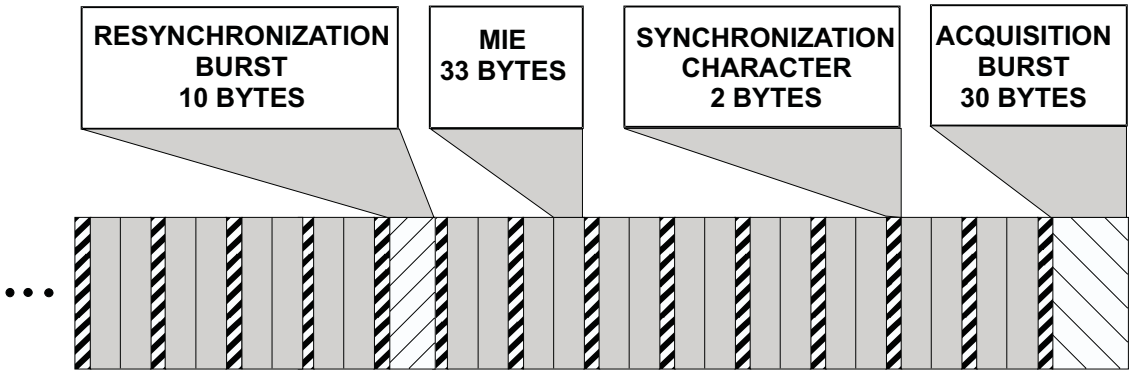

Figure 38 - Positioning of Synchronising Features – End

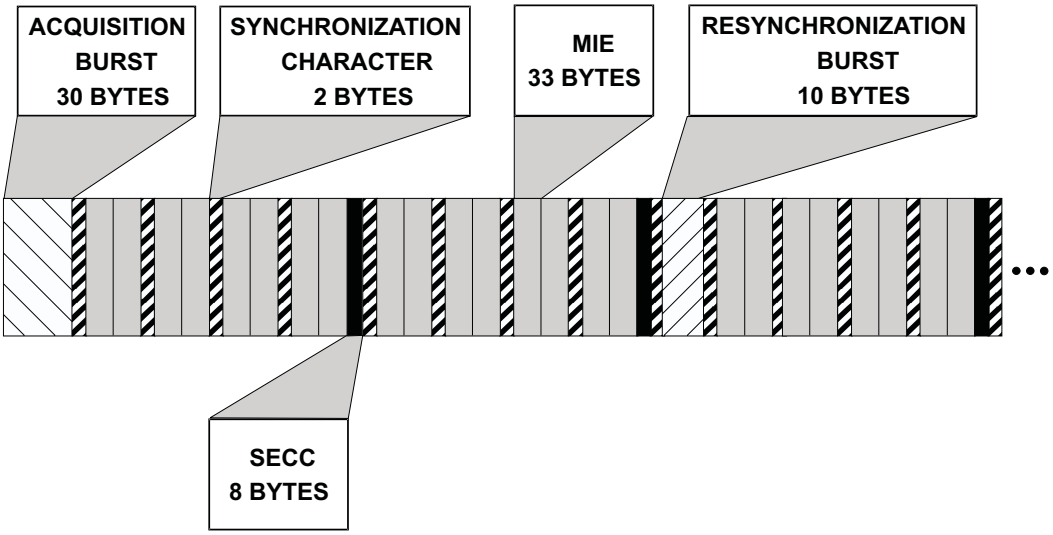

Figure 39 - Positioning of SECC

--`,,```,,,,````-`-`,,`,,`,`,,`---
© ISO/IEC 2000 – All rights reserved
Copyright International Organization for Standardization
Provided by IHS under license with ISO
No reproduction or networking permitted without license from IHS
Not for Resale

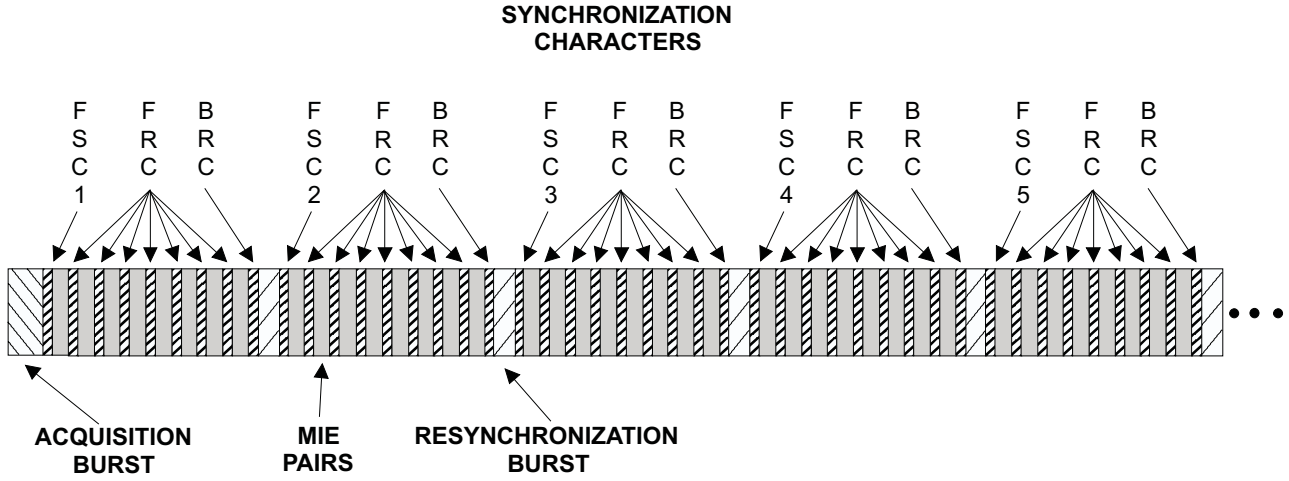

Figure 40 - Placement of Synchronisation Characters – Beginning

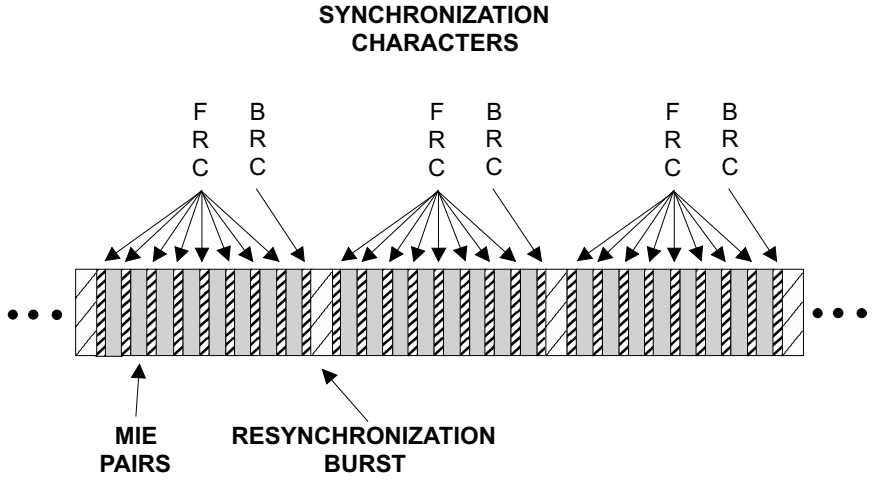

Figure 41 - Placement of Synchronisation Characters – Middle

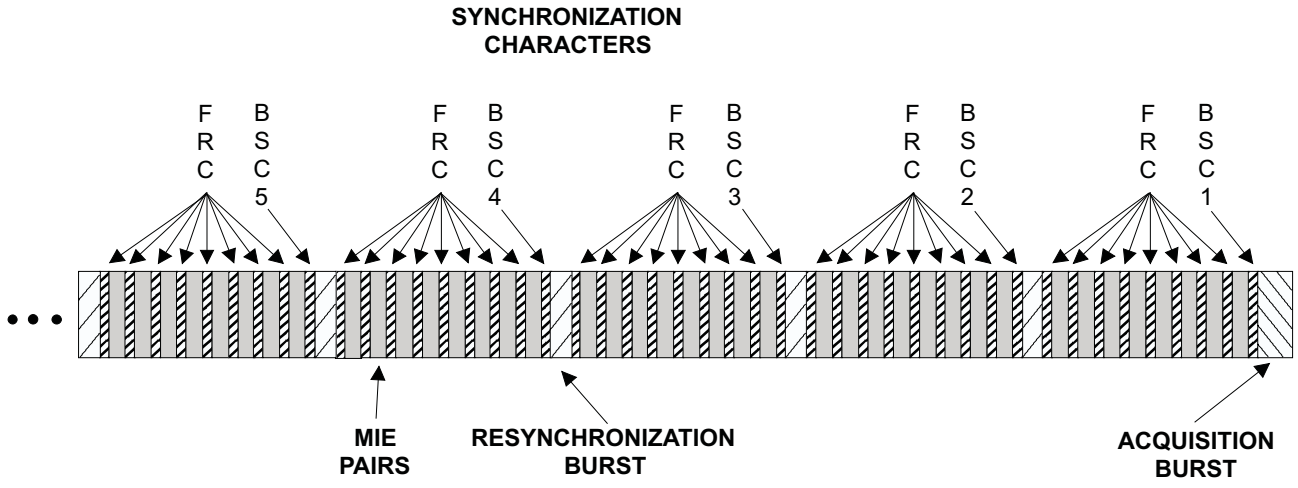

Figure 42 - Placement of Synchronisation Characters – End

© ISO/IEC 2000 – All rights reserved

Copyright International Organization for Standardization
Provided by IHS under license with ISO
No reproduction or networking permitted without license from IHS
Not for Resale

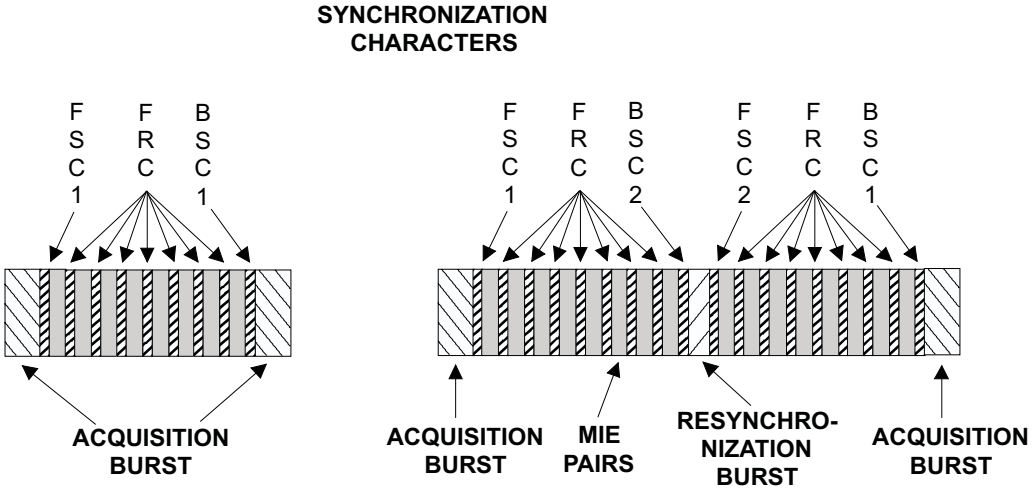

Figure 43 - Synchronisation Characters for One and Two MIU Device Blocks

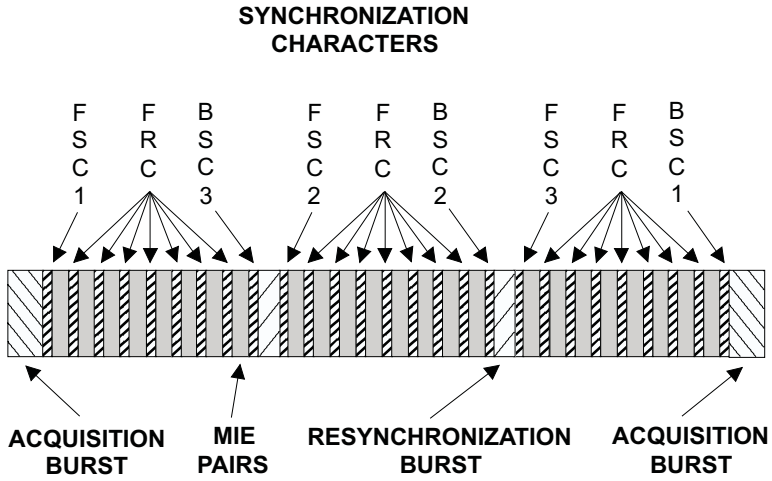

Figure 44 - Synchronisation Characters for Three MIU Device Block

19.2 Interblock gap formatting

Recorded physical blocks shall be separated by an IBG. The IBG pattern shall consist of a ONE and eight ZEROs recorded on each track. The IBG data shall not be RLL byte-translated. The IBG data shall be write-equalised.

The length of the interblock gap depends upon its position. It shall be as shown in table 8.

Table 8 - Lengths of interblock gaps

Position	Nominal	Minimum	Maximum
Between EOW, BOW, and SDM blocks	4 mm	1,90 mm	4,20 mm
Between all other blocks	2 mm	1,90 mm	170 mm
Before BOP and FID	323 mm	307 mm	339 mm
After last EOD block	2 mm	1,90 mm	2,1 mm

Any discontinuity across all tracks in an interblock gap (such as caused by a stop/start operation) shall not be greater than 8,8 μm in length. Such discontinuity shall not occur within 1,4 mm before the acquisition burst of a recorded physical block or within 0,4 mm after the final acquisition burst of such a recorded physical block.

An interblock gap shall be recorded immediately before and after each recorded physical block and any mark.

© ISO/IEC 2000 – All rights reserved
Copyright International Organization for Standardization
Provided by IHS under license with ISO
No reproduction or networking permitted without license from IHS
Not for Resale

19.3 RLL byte translation

The synchronised physical tracks shall be recorded on tape after being transformed as follows.

The data shall be treated as a continuous stream of bits. Each two bits shall be translated according to table 9 and written on the tape as three consecutive bits. The RLL encoder shall be initialised to state 3 at the beginning of a recorded physical block.

The initial entry into the table shall be at the intersection of the first two bits that are to be encoded and the current state of three. The data to be written shall be as given in the data out item. The next state shall be as given in the next state item. The next state shall then become the current state.

All subsequent bit pairs shall be encoded by entering the table at the intersection of the next two bits that are to be encoded and the current state. The data to be written and the next state shall be found as above.

Table 9 - RLL Encoder Table

	Data in = 00		Data in = 01		Data in = 10		Data in = 11	
Current state	**Data out**	**Next state**	**Data out**	**Next state**	**Data out**	**Next state**	**Data out**	**Next state**
0	010	0	010	1	010	2	010	3
1	001	0	001	1	001	4	010	4
2	100	0	100	1	100	2	100	3
3	101	0	101	1	101	4	100	4
4	000	0	000	1	000	2	000	3

The synchronised physical track encoded as described above shall be presented to the write equaliser input.

The lowest numbered bit position (most significant digit) shall be the first bit position encountered when moving in the logical forward direction.

19.4 Write equalisation bit translation

The RLL encoded data shall be treated as a continuous stream of bits. Each bit shall be translated according to table 10 and shall be written on the tape as two consecutive recorded cells.

The initial entry into the table shall be at the intersection of the first RLL encoded bit that is to be encoded and the current state of zero. The data to be written shall be as given in the data out item. The next state shall be as given in the next state item. The next state shall then become the current state.

All subsequent bits shall be encoded by entering the table at the intersection of the next bit that is to be encoded and the current state. The data to be written and the next state shall be found as above.

Table 10 - Write Equaliser Encoder Table

	Data in = 0		Data in = 1	
Current state	**Data out**	**Next state**	**Data out**	**Next state**
0	10	0	00	1
1	11	2	–	–
2	01	5	11	4
3	10	0	00	1
4	00	3	–	–
5	01	5	11	4

The result of this process shall be to produce two recorded cells for each RLL encoded bit.

19.5 Writing bits on tape

The modulation method shall be such that a transition occurs when there is a change in the data contained in adjacent recorded cells.

© ISO/IEC 2000 – All rights reserved

Copyright International Organization for Standardization
Provided by IHS under license with ISO
No reproduction or networking permitted without license from IHS
Not for Resale

Annex A
(normative)

Tape abrasivity measurement procedure

A.1 General

Tape abrasivity is the tendency of the tape to wear the tape transport.

A.2 Test fixture

Install a clean ferrite wear bar made as shown in figure A.1 on a holding fixture similar to that shown in figure A.2. Test edge facing upward shall be unworn and free of chips or voids greater than 1 μm in size. The radius of the test edge shall not exceed 13 μm.

The ferrite bar shall be composed of single-phase polycrystalline ferrite. It shall have the following weight percentages:

ZnO	22 %
NiO	11 %
Fe_2O_3	67 %

The average grain size shall be within 7 μm to 8 μm. Its density shall be 5,32 g/cm^3.

The surface finish on all four sides of the bar shall be at least of roughness grade N2, 0,05 μm.

The wear bar shall be square within 0,05 mm.

A.3 Procedure

Install the test fixture on a tape transport so that the wrap angle of the tape over the bar is 8 ° on each side, for 16 ° of total wrap;

Set the tape tension at the bar at 1,4 N.

With a tape speed of 1,0 m/s, make one pass of the tape over the wear bar. The length of tape passing over the wear bar shall be 520 m ± 2,5 m. This length may be segmented into the appropriate number of cartridges.

Remove the holding fixture from the transport and measure the length of the flat worn on the wear bar. This measurement is most easily made using a microscope of known magnification, a camera, and a reference reticule. Magnification of 300X or higher is recommended.

Measurements shall be taken at the 1/4, 1/2, and 3/4 points of the 12,65 mm width of the wear pattern. Take the average length calculated from the three readings. Figure A.3 shows a typical wear pattern and the points of measurements.

© ISO/IEC 2000 – All rights reserved
Copyright International Organization for Standardization
Provided by IHS under license with ISO
No reproduction or networking permitted without license from IHS
Not for Resale

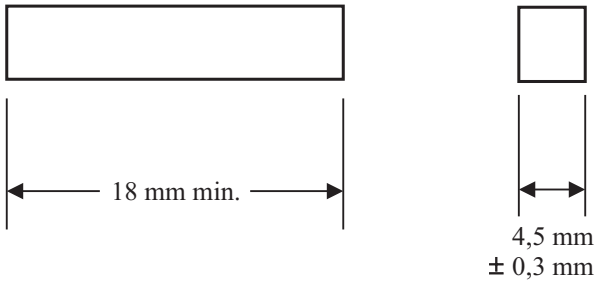

Figure A.1 - Ferrite wear bar

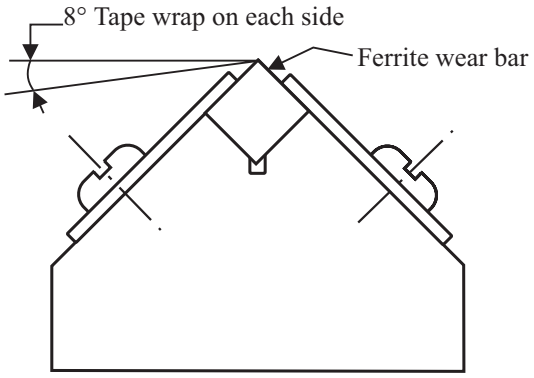

Figure A.2 - Wear bar holding fixture

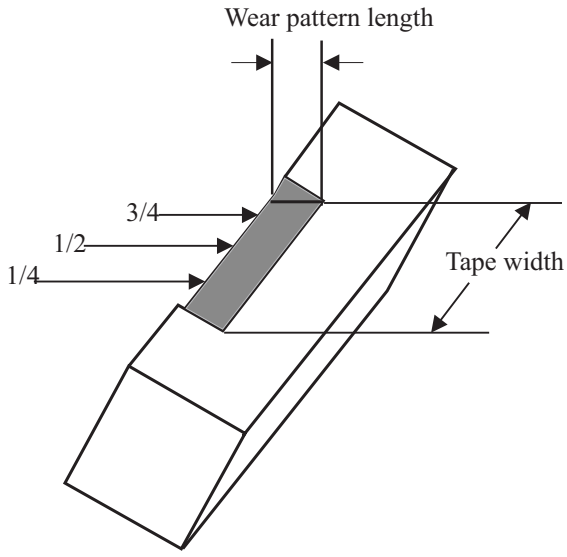

Figure A.3 - Typical wear bar pattern

© ISO/IEC 2000 – All rights reserved

Copyright International Organization for Standardization
Provided by IHS under license with ISO
No reproduction or networking permitted without license from IHS
Not for Resale

Annex B
(normative)

Media Type Label

B.1 Letter

The media type shall be identified by the letter J. It shall conform to the requirements of figure B.2 where

T = 0,787 mm ± 0,127 mm
H = 5,613 mm ± 0,127 mm
W = 3,150 mm ± 0,127 mm

The centrelines of the letter, at 1/2 H and 1/2 W, shall coincide with the horizontal and vertical centrelines for the letter shown in figure B.1.

B.2 Bar Code

The bar code shall be the 3 of 9 bar code for the letter J, taken from ANSI MH 10.8M.1983. The bar code shall be printed with the first bit of the code towards the bottom of the label and the last bit towards the top of the label.

The width of the narrow spaces and bars shall be 0,737 mm ± 0,127 mm.

The width of the wide spaces and bars shall be 1,437 mm ± 0,127 mm.

The maximum value of the width of a bar shall be measured to the outside of the edge roughness. The width of a space shall be the distance between such maxima.

The minimum value of the width of a bar shall be measured to the inside of the edge roughness.

B.3 Custom stop code

The bar code shall be followed by a 2 of 4 stop code shown in figure B.1.

B.4 Reflectivity

Measurements of the reflectivity of the white and black areas shall be made using the Macbeth PCM II Print Contrast Meter, or equivalent.

B.4.1 White areas

B.4.1.1 Reflectivity

The reflectivity of white areas, *RW*, shall be

$55\% \leq RW \leq 75\ \%$

It shall be measured in the centre of narrow spaces, avoiding isolated print defects and edge roughness.

B.4.1.2 Spots

A spot is defined as an area in the white area in which the reflectivity is less than 55 %. No spot shall have a diameter greater than 0,20 mm. There shall be no more than 5 spots per label. No two spots shall be within 0,51 mm of each other.

B.4.2 Black areas

B.4.2.1 Print contrast signal

The reflectivity of black areas, *RB*, shall be shall be measured anywhere within any black area, avoiding print defects and edge roughness. The print contrast signal, *PCS*, is defined as

$$PCS = \frac{RW - RB}{RW}$$

The minimum shall be 0,85.

© ISO/IEC 2000 – All rights reserved
Copyright International Organization for Standardization
Provided by IHS under license with ISO
No reproduction or networking permitted without license from IHS
Not for Resale

B.5.2.2 Voids

A void is defined as an area within the black in which the PCS is less than 0,85. No void shall have a diameter greater than 0,20 mm. There shall be no more than one void per bar of an OCR character and no more than five voids in the entire label. No two voids shall be within 0,51 mm of each other.

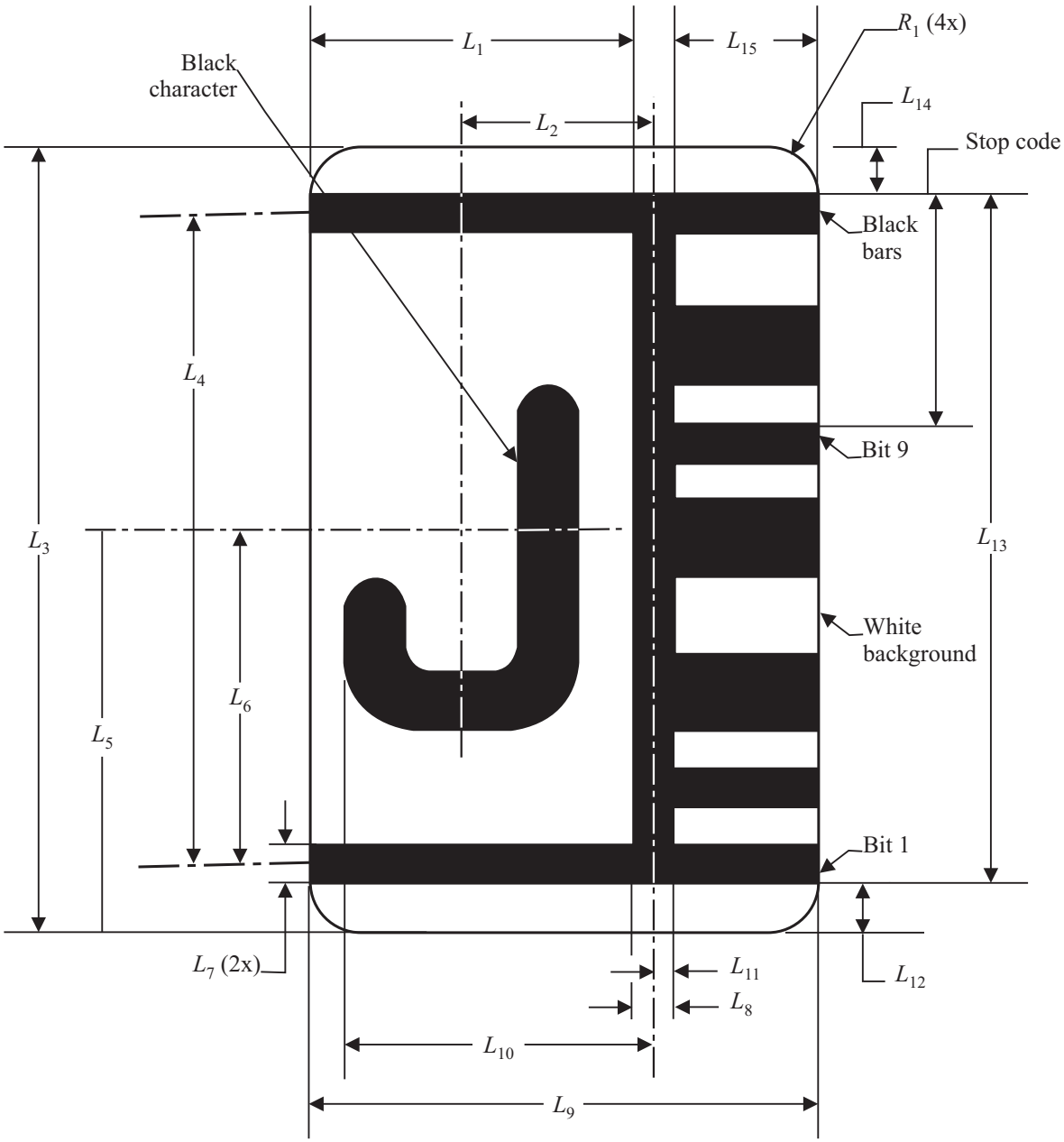

Figure B.1 - Bar code label for J

© ISO/IEC 2000 – All rights reserved

Copyright International Organization for Standardization
Provided by IHS under license with ISO
No reproduction or networking permitted without license from IHS
Not for Resale

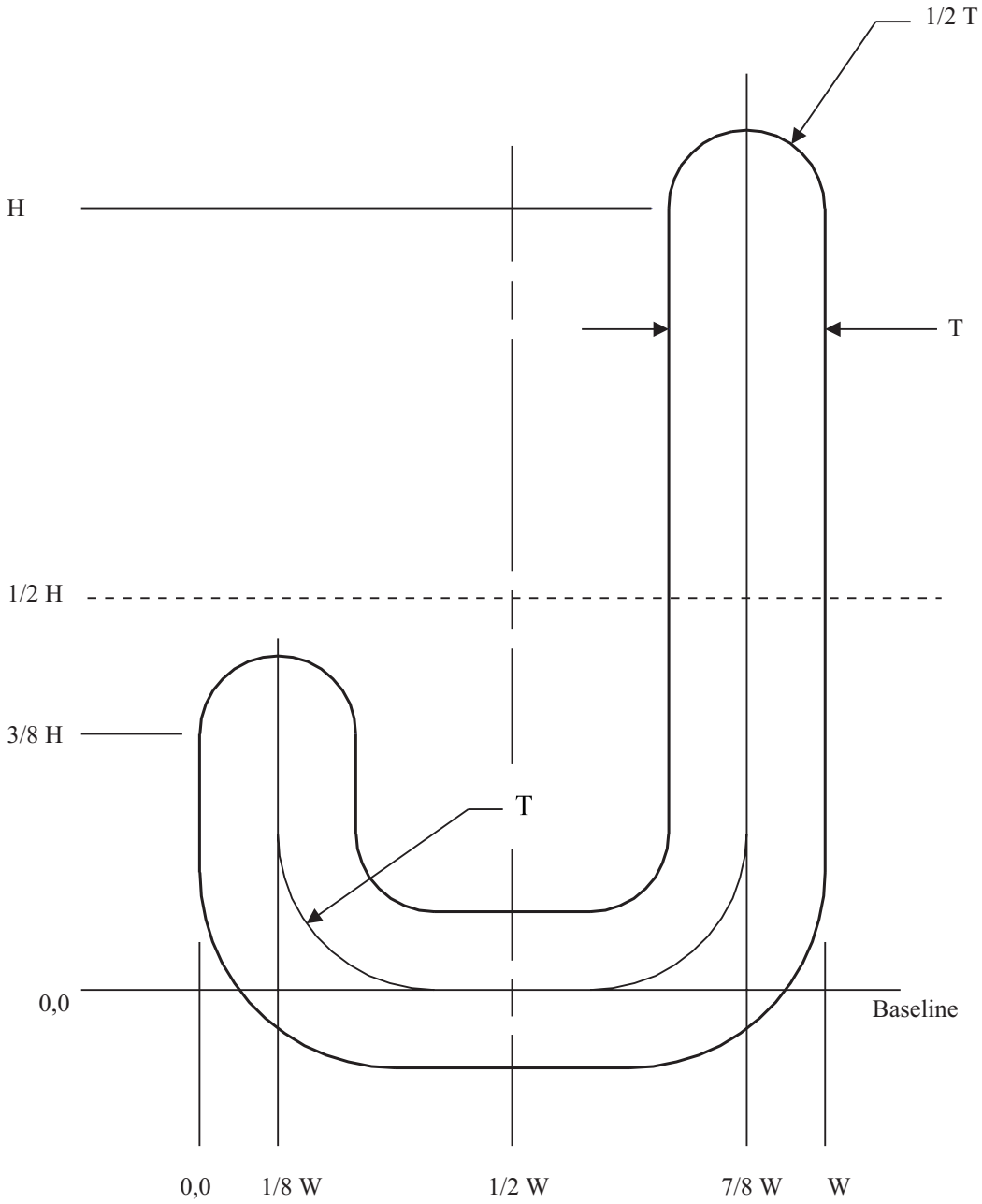

Figure B.2 - Data character

© ISO/IEC 2000 – All rights reserved
Copyright International Organization for Standardization
Provided by IHS under license with ISO
No reproduction or networking permitted without license from IHS
Not for Resale

Table B.1 - Dimensions of the bar code label

	SI unit (mm)	
Symbol	**Dimension**	**Tolerance**
L_1	5,59	± 0,51
L_2	3,25	± 0,13
L_3	16,51	± 0,25
L_4	12,70	± 0,13
L_5	8,25	± 0,13
L_6	6,35	± 0,13
L_7	0,76	± 0,13
L_8	0,76	± 0,13
L_9	9,80	+0,51 -1,02
L_{10}	5,21	± 0,13
L_{11}	0,38	± 0,13
L_{12}	1,65	± 0,51
L_{13}	13,26	± 0,13
L_{14}	1,14	+ 0,51 - 0,00
L_{15}	3,45	± 0,51
R_1	1,52	± 0,13

--`,,```,,,,````-`-`,,`,,`,`,,`---

© ISO/IEC 2000 – All rights reserved

Copyright International Organization for Standardization
Provided by IHS under license with ISO
No reproduction or networking permitted without license from IHS
Not for Resale

Annex C
(normative)

Measurement of Bit Shift

The equipment normally used for recording interchange cartridges shall be used for recording the tape under test.

C.1 Read equipment

The tape shall be read on any tape transport in which the speed is within 1 % of nominal speed.

There are no absolute requirements on the output voltage from the read head. However, the head design and the tape speed shall be chosen to avoid problems from low signal to noise ratios.

Read head

If an inductive head is utilised, the gap length shall be less than 0,24 µm.

If a magneto-resistive head is utilised, the effective read gap, calculated from the geometric mean of the distances from the element to each shield, shall be less than 0,24 µm.

The azimuth alignment of the read head gap and the mean flux transition line of the written track shall be less than 9 ' of arc.

Read channel

The frequency response of the head, read amplifier and filter shall meet the following specification when tested with a wire placed close to and parallel to the read gap.

For an inductive head, the overall response shall be:

$$\left(\frac{1}{s}\right)\left(\frac{s}{s+0{,}05\omega_0}\right)\left(\frac{\omega_0}{s+\omega_0}\right)\left(\frac{\omega_0^2}{s^2+0{,}4\omega_0 s+2{,}8\omega_0^2}\right)$$

For a magneto-resistive head, the overall response shall be:

$$\left(\frac{s}{s+0{,}05\omega_0}\right)\left(\frac{\omega_0}{s+\omega_0}\right)\left(\frac{\omega_0^2}{s^2+0{,}4\omega_0 s+2{,}8\omega_0^2}\right)$$

Where ω_0 = 1,0 times the fundamental frequency of the repeated RLL encoded 1010 bit pattern.

For either the inductive head or the magneto-resistive head, the magnitude response shall be within 1 dB, and the phase response shall be within 5 °, of the responses described above over the frequency range 0,01 ω_0 to 2 ω_0.

C.2 Measurement

The average RLL bit cell length (L) shall be obtained from any pair of reference zero-crossings (RZC) located on either side of the test zero-crossing (TZC). A reference zero-crossing shall be any zero-crossing preceded by at least one pair of the RLL encoded ONE–ZERO pattern, and followed by at least one pair of the RLL encoded ONE–ZERO pattern. The RLL encoded patterns shall be write equaliser bit translated. The reference zero-crossings shall not be more than 336 RLL bit cells apart.

© ISO/IEC 2000 – All rights reserved
Copyright International Organization for Standardization
Provided by IHS under license with ISO
No reproduction or networking permitted without license from IHS
Not for Resale

C.3 Data analysis

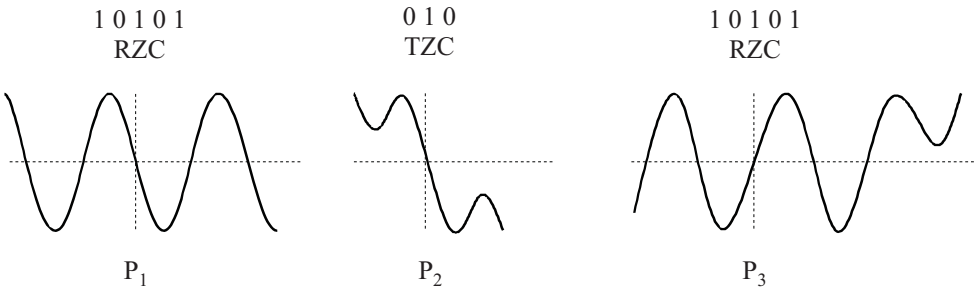

where: RZC is a reference zero-crossing
TZC is the test zero-crossing
P_n is the position of the nth zero-crossing.

Figure C.1 - Test and reference zero-crossing relationships

If N is the number of RLL encoded bit cells between reference zero-crossings, the average RLL bit cell length shall be:

$$L = (P_3 - P_1) / N$$

If there are M RLL bit intervals between the first reference zero-crossing and the test zero-crossing then:

$$\text{percent bit shift} = 100 \times (\left| (M \times L) - (P_2 - P_1) \right| / L)$$

© ISO/IEC 2000 – All rights reserved

Copyright International Organization for Standardization
Provided by IHS under license with ISO
No reproduction or networking permitted without license from IHS
Not for Resale

Annex D
(normative)

Vendor Identification Code

A Vendor Identification Code shall consist of at most 8 characters coded according to the G0 Set of the International Reference Version of International Standard ISO 646, *7-Bit Coded Character Set for Information Interchange.*

The significant characters allowed in a Vendor Identification Code are the character shown in table D.1, except those in positions 2/0, 3/11 and 7/15.

When represented in hexadecimal notation, these characters shall be represented by the 8-bit bytes (21) to (3A) and (3C) to (7E).

The Vendor Identification Code shall be left-justified in the 8-byte field constituted by Bytes 0 to 7 of the Device Block Vendor Identification Code field (See 17.1.3).

If the Vendor Identification Code comprises less than 8 characters, SPACE characters shall be added to the right of the last significant character, so that the whole field is recorded. SPACE shall be represented by (20).

If Bytes 0 to 7 of this field are all set to (00), this shall mean that no Vendor Identification Code is recorded.

Technical Committee T10 of the Accredited Standards Committee NCITS maintains a list of Vendor Identification Codes currently in use. The name of the Chairman of T10 can be obtained from http://www.ncits.org.

Table D.1 - International Reference Version

				b7	0	0	0	0	1	1	1	1
				b6	0	0	1	1	0	0	1	1
				b5	0	1	0	1	0	1	0	1
b4	b3	b2	b1		0	1	2	3	4	5	6	7
0	0	0	0	0			SP	0	@	P	`	p
0	0	0	1	1			!	1	A	Q	a	q
0	0	1	0	2			"	2	B	R	b	r
0	0	1	1	3			#	3	C	S	c	s
0	1	0	0	4			$	4	D	T	d	t
0	1	0	1	5			%	5	E	U	e	u
0	1	1	0	6			&	6	F	V	f	v
0	1	1	1	7			'	7	G	W	g	w
1	0	0	0	8			(	8	H	X	h	x
1	0	0	1	9			)	9	I	Y	i	y
1	0	1	0	10			*	:	J	Z	j	z
1	0	1	1	11			+	;	K	[	k	{
1	1	0	0	12			,	<	L	\	l	|
1	1	0	1	13			-	=	M	]	m	}
1	1	1	0	14			.	>	N	^	n	~
1	1	1	1	15			/	?	O	_	o	DEL

© ISO/IEC 2000 – All rights reserved
Copyright International Organization for Standardization
Provided by IHS under license with ISO
No reproduction or networking permitted without license from IHS
Not for Resale

Annex E
(informative)

Recommendations for transportation

E.1 Environment

It is recommended that during transportation that the cartridges are kept within the following conditions:

E.1.1 Unrecorded cartridges

Unrecorded cartridges are cartridges that are servo written but have no recorded user data.

Temperature : - 23 °C to 48 °C
Relative humidity : 5 % to 80 %
Wet bulb temperature : 26,7 °C max.

There should be no condensation in or on the cartridge.

E.1.2 Recorded cartridges

Temperature : 5 °C to 32 °C
Relative humidity : 5 % to 80 %
Wet bulb temperature : 26 °C max.

There should be no condensation in or on the cartridge.

E.2 Hazards

Transportation of recorded cartridges involves three basic potential hazards.

E.2.1 Impact loads and vibration

The following recommendations should minimise damage during transportation.

i. Avoid mechanical loads that would distort the cartridge shape.

ii. Avoid dropping the cartridge more than 1 m.

iii. Cartridges should be fitted into a rigid box containing adequate shock-absorbent material.

iv. The final box should have a clean interior and construction that provides sealing to prevent the ingress of dirt and water.

v. The orientation of the cartridges within the final box should be such that the axes of the hubs are horizontal.

vi. The final box should be clearly marked to indicate its correct orientation.

E.2.2 Extremes of temperature and humidity

i. Extreme changes in temperature and humidity should be avoided whenever possible.

ii. Whenever a cartridge is received it should be conditioned in the operating environment for a period of at least 24 h.

E.2.3 Effects of stray magnetic fields

A nominal spacing of not less than 80 mm should exist between the cartridge and the outer surface of the shipping container. This should minimise the risk of corruption.

--`,,```,,,,````-`-`,,`,,`,`,,`---

© ISO/IEC 2000 – All rights reserved

Copyright International Organization for Standardization
Provided by IHS under license with ISO
No reproduction or networking permitted without license from IHS
Not for Resale

Annex F
(informative)

Inhibitor tape

Any tape that reduces the performance of the tape drive or other tapes is called an inhibitor tape. Certain tape characteristics can contribute to poor tape drive performance. These characteristics include: high abrasivity, high static friction to tape path components, poor edge conditions, excessive tape wear debris, electro-static charge build-up on the tape or tape path components, interlayer slippage, transfer of coating to the back of the next tape layer, separation of tape constituents causing deposits that may lead to tape sticking or poor performance of other tapes. Tapes that have these characteristics may not give satisfactory performance and can result in excessive errors.

Tapes to be used in this cartridge should not be inhibitor tapes.

© ISO/IEC 2000 – All rights reserved
Copyright International Organization for Standardization
Provided by IHS under license with ISO
No reproduction or networking permitted without license from IHS
Not for Resale

Annex G
(informative)

Tape durability

Testing and measurements performed on the cartridge using appropriate models of tape drives are described in G.1 and G.2.

G.1 Short-length durability and reliability test

Short-length durability is the capability of the tape to withstand the wearing action encountered during repeated accesses to a short file of data. A permanent read error is one that persists for ten consecutive read passes.

G.1.1 Recommendation

There should be no permanent read errors for a minimum of 40 000 read-forward passes.

G.1.2 Procedure

Ensure the tape drive is clean before starting this test. As a test sample, use a minimum of four cartridges, written in an area free of read errors. The test area should consist of fifteen 262 144-byte records.

Each test cycle consists of a start operation at the beginning of the test area accessing all records sequentially in the test area, and, using the backspace file, returning to the beginning of the test area. Ten attempts to read forward should be made for each read error before a permanent read error is logged.

Tape-path cleaning between passes is not permitted for this test.

The test should be performed in a normal operating environment for the tape and the tape drive.

G.2 Long-length durability and reliability test

Long-length durability is the capability of the tape to resist the wearing action encountered while cycling full length on a tape drive.

G.2.1 Recommendation

After 200 full file read-while-write passes the temporary write errors should not increase by more than eight in any cartridge tested, and there should not be any permanent read or write errors. A full file pass consists of four complete wraps, where a wrap is one complete cycle from beginning of tape to end of tape and a return to the beginning of tape.

G.2.2 Procedure

Clean the tape drive before starting this test. The data should be successfully written in both a streaming and start-stop mode. Start-stop should be 20 to 200 cycles per half-wrap (full length of tape). Tape-path cleaning between passes is not permitted for this test. The test should be performed in a normal operating environment for the tape and tape unit.

© ISO/IEC 2000 – All rights reserved

Copyright International Organization for Standardization
Provided by IHS under license with ISO
No reproduction or networking permitted without license from IHS
Not for Resale

ICS 35.220.23

Price based on 75 pages

© ISO/IEC 2000 – All rights reserved

Copyright International Organization for Standardization
Provided by IHS under license with ISO
No reproduction or networking permitted without license from IHS

Not for Resale