INTERNATIONAL STANDARD

ISO/IEC 17592

First edition
2004-07-15

Information technology — 120 mm (4,7 Gbytes per side) and 80 mm (1,46 Gbytes per side) DVD rewritable disk (DVD-RAM)

Technologies de l'information — Disque DVD réenregistrable (DVD-RAM) de 120 mm (4,7 Go par face) et 80 mm (1,46 Go par face)

Reference number
ISO/IEC 17592:2004(E)

© ISO/IEC 2004

Copyright International Organization for Standardization
Reproduced by IHS under license with ISO
No reproduction or networking permitted without license from IHS

Not for Resale

PDF disclaimer

This PDF file may contain embedded typefaces. In accordance with Adobe's licensing policy, this file may be printed or viewed but shall not be edited unless the typefaces which are embedded are licensed to and installed on the computer performing the editing. In downloading this file, parties accept therein the responsibility of not infringing Adobe's licensing policy. The ISO Central Secretariat accepts no liability in this area.

Adobe is a trademark of Adobe Systems Incorporated.

Details of the software products used to create this PDF file can be found in the General Info relative to the file; the PDF-creation parameters were optimized for printing. Every care has been taken to ensure that the file is suitable for use by ISO member bodies. In the unlikely event that a problem relating to it is found, please inform the Central Secretariat at the address given below.

© ISO/IEC 2004

All rights reserved. Unless otherwise specified, no part of this publication may be reproduced or utilized in any form or by any means, electronic or mechanical, including photocopying and microfilm, without permission in writing from either ISO at the address below or ISO's member body in the country of the requester.

ISO copyright office
Case postale 56 • CH-1211 Geneva 20
Tel. + 41 22 749 01 11
Fax + 41 22 749 09 47
E-mail copyright@iso.org
Web www.iso.org

Published in Switzerland

Copyright International Organization for Standardization
Reproduced by IHS under license with ISO
No reproduction or networking permitted without license from IHS

© ISO/IEC 2004 – All rights reserved

Not for Resale

Contents

Page

Section 1 - General 1

1 Scope 1

2 Conformance 1
2.1 Optical Disk 1
2.2 Generating system 1
2.3 Receiving system 2

3 Normative references 2

4 Terms and definitions 2

5 Conventions and notations 4
5.1 Representation of numbers 4
5.2 Names 4

6 List of acronyms 4

7 General description of the optical disk 5

8 General requirements 6
8.1 Environments 6
8.1.1 Test environment 6
8.1.2 Operating environment 6
8.1.3 Storage environment 6
8.1.4 Transportation 6
8.2 Safety requirement 6
8.3 Flammability 6

9 Reference Drive 7
9.1 Optical Head 7
9.2 Read channels 8
9.3 Rotation speed 8
9.4 Disk clamping 8
9.5 Normalized servo transfer function 8
9.6 Reference Servo for axial tracking 8
9.7 Reference Servo for radial tracking 10

Section 2 - Dimensional, mechanical and physical characteristics of the disk 11

10 Dimensional characteristics 11
10.1 Overall dimensions 12
10.2 First transition area 13
10.3 Second transition area 13
10.4 Clamping Zone 13
10.5 Third transition area 13
10.6 Rim area 14
10.7 Remark on tolerances 14
10.8 Label 14

11 Mechanical characteristics 14
11.1 Mass 14
11.2 Moment of inertia 14
11.3 Dynamic imbalance 15
11.4 Sense of rotation 15
11.5 Runout 15
11.5.1 Axial runout 15

© ISO/IEC 2004 – All rights reserved

Copyright International Organization for Standardization
Reproduced by IHS under license with ISO
No reproduction or networking permitted without license from IHS
Not for Resale

11.5.2 Radial runout 15

12 Optical characteristics 15
12.1 Index of refraction 15
12.2 Thickness of the transparent substrate 15
12.3 Angular deviation 15
12.4 Birefringence of the transparent substrate 16
12.5 Reflectivity 16

Section 3 - Format of information 17

13 Data format 17
13.1 Data Frames 17
13.1.1 Data ID 18
13.1.2 Data ID Error Detection code (IED) 18
13.1.3 Reserved bytes 19
13.1.4 Error Detection Code (EDC) 19
13.2 Scrambled Frames 19
13.3 ECC Blocks 20
13.4 Recording Frames 21
13.5 Recording code and NRZI conversion 22
13.6 Recorded Data Field 23
13.7 DC component suppress Control (DCC) 24
13.7.1 DCC for the data in the Rewritable Area 24
13.7.2 DCC for the data in the Embossed Area 24
13.7.3 PID and PED recording 25

14 Track format 25
14.1 Track shape 25
14.2 Track path 25
14.3 Track pitch 26
14.4 Track layout 26
14.5 Rotation speed 26
14.6 Radial alignment 28
14.7 Sector number 28

15 Sector format 29
15.1 Sector layout 29
15.1.1 Sector layout in the Rewritable Area 29
15.1.2 Sector layout in the Embossed Area 30
15.2 VFO fields 30
15.3 Address Mark (AM) 31
15.4 Physical ID (PID) fields 31
15.5 PID Error Detection code (PED) fields 32
15.6 Postamble 1 and Postamble 2 (PA 1, PA 2) fields 32
15.7 Mirror field 34
15.8 Gap field 34
15.9 Guard 1 field 34
15.10 Pre-Synchronous code (PS) field 34
15.11 Data field 34
15.12 Postamble 3 (PA 3) field 34
15.13 Guard 2 field 34
15.14 Recording polarity randomization 35
15.15 Buffer field 35

16 Format of the Information Zone 35
16.1 Division of the Information Zone 35
16.2 Lead-in Zone 38
16.2.1 Structure of Lead-in Zone 38
16.2.2 Initial Zone 39
16.2.3 Reference Code Zone 39
16.2.4 Buffer Zone 1 39
16.2.5 Buffer Zone 2 39

© ISO/IEC 2004 – All rights reserved
Copyright International Organization for Standardization
Reproduced by IHS under license with ISO
No reproduction or networking permitted without license from IHS
Not for Resale

16.2.6 Control Data Zone 39
16.2.7 Connection Zone 52
16.2.8 Guard Track Zones 1 and 2 53
16.2.9 Disk Test Zone 53
16.2.10 Drive Test Zone 53
16.2.11 Disk Identification Zone 54
16.2.12 DMA 1 and DMA 2 56
16.3 Data Zone 56
16.3.1 Structure of Data Zone and of the Defect Management Areas (DMAs) 56
16.3.2 Guard Track Zones 57
16.3.3 Partitioning 57
16.3.4 Number of blocks in the supplementary spare area 60
16.4 Lead-out Zone 61
16.4.1 Structure of Lead-out Zone 61
16.4.2 DMA 3 and DMA 4 61
16.4.3 Reserved Zone 61
16.4.4 Guard Track Zone 1 61
16.4.5 Drive Test Zone 61
16.4.6 Disk Test Zone 61
16.4.7 Guard Track Zone 2 62

17 Defect management 62
17.1 Defect Management Areas (DMAs) 62
17.2 Disk Definition Structure (DDS) 63
17.3 Spare sectors 65
17.4 Slipping Algorithm 66
17.5 Linear Replacement Algorithm 67
17.6 Primary Defect List (PDL) 68
17.7 Secondary Defect List (SDL) 69
17.8 Formatting of the disk 72
17.8.1 Initialization 72
17.8.2 Re-initialization 73
17.8.3 Data field number resulting from Initialization and Re-initialization 73
17.9 Write procedure 74
17.10 Read procedure 74
17.10.1 Read procedure 74
17.10.2 Blank ECC Block 74

Section 4 - Characteristics of embossed information 75

18 Method of testing 75
18.1 Environment 75
18.2 Reference Drive 75
18.2.1 Optics and mechanics 75
18.2.2 Read power 75
18.2.3 Read channels 75
18.2.4 Tracking channel 75
18.2.5 Tracking 75
18.3 Definition of signals 75

19 Signals from lands and grooves 80
19.1 Push-pull signal 80
19.2 Divided push-pull signal 80
19.3 On-track signal 80
19.4 Phase depth 81
19.5 Wobble signal 81

20 Signals from Header fields 81
20.1 VFO 1 and VFO 2 82
20.2 Address Mark, PID, PED and Postamble 82
20.3 Signals from Header 1, Header 2, Header 3 and Header 4 83
20.4 Phase depth 84

© ISO/IEC 2004 All rights reserved
v
Copyright International Organization for Standardization
Reproduced by IHS under license with ISO
No reproduction or networking permitted without license from IHS
Not for Resale

21 Signals from Embossed Area 84
21.1 High Frequency (HF) signal 84
21.1.1 Modulated amplitude 84
21.1.2 Signal asymmetry 84
21.1.3 Cross-track signal 84
21.2 Jitter 84
21.3 Servo signal 84
21.3.1 Differential phase tracking error signal 85
21.3.2 Tangential push-pull signal 85

Section 5 - Characteristics of the recording layer 87

22 Method of testing 87
22.1 Environment 87
22.2 Reference Drive 87
22.2.1 Optics and mechanics 87
22.2.2 Read power 87
22.2.3 Read channel 87
22.2.4 Tracking 87
22.3 Write conditions 87
22.3.1 Write pulse 87
22.3.2 Write power 88
22.3.3 Adaptive write control table 89
22.3.4 Adaptive write pulse control mode 90
22.4 Definition of signals 90

23 Write characteristics 91
23.1 Modulated amplitude and Signal asymmetry 91
23.2 Jitter 91

Section 6 - Characteristics of user data 92

24 Method of testing 92

Annex A (normative) **Measurement of the angular deviation α 93**

Annex B (normative) **Measurement of birefringence 95**

Annex C (normative) **Measurement of the differential phase tracking error 97**

Annex D (normative) **Reflectivity calibration and measuring method 101**

Annex E (normative) **Tapered cone for disk clamping 103**

Annex F (normative) **Measuring conditions for the operation signals 104**

Annex G (normative) **8-to-16 Recording code with RLL (2,10) requirements 106**

Annex H (normative) **Definition of the write pulse 116**

Annex J (normative) **Burst Cutting Area (BCA) 119**

Annex K (informative) **Guideline for randomization of the Gap length, the Guard 1 length and the recording polarity 127**

Annex L (informative) **Transportation 128**

Annex M (informative) **Guideline for sector replacement 129**

© ISO/IEC 2004 – All rights reserved
Copyright International Organization for Standardization
Reproduced by IHS under license with ISO
No reproduction or networking permitted without license from IHS
Not for Resale

Foreword

ISO (the International Organization for Standardization) and IEC (the International Electrotechnical Commission) form the specialized system for worldwide standardization. National bodies that are members of ISO or IEC participate in the development of International Standards through technical committees established by the respective organization to deal with particular fields of technical activity. ISO and IEC technical committees collaborate in fields of mutual interest. Other international organizations, governmental and non-governmental, in liaison with ISO and IEC, also take part in the work. In the field of information technology, ISO and IEC have established a joint technical committee, ISO/IEC JTC 1.

International Standards are drafted in accordance with the rules given in the ISO/IEC Directives, Part 2.

The main task of the joint technical committee is to prepare International Standards. Draft International Standards adopted by the joint technical committee are circulated to national bodies for voting. Publication as an International Standard requires approval by at least 75 % of the national bodies casting a vote.

Attention is drawn to the possibility that some of the elements of this document may be the subject of patent rights. ISO and IEC shall not be held responsible for identifying any or all such patent rights.

ISO/IEC 17592 was prepared by Ecma International (as ECMA-330) and was adopted, under a special “fast-track procedure”, by Joint Technical Committee ISO/IEC JTC 1, *Information technology*, in parallel with its approval by national bodies of ISO and IEC.

--`,,```,,,,````-`-`,,`,,`,`,,`---

© ISO/IEC 2004 All rights reserved

Copyright International Organization for Standardization
Reproduced by IHS under license with ISO
No reproduction or networking permitted without license from IHS
Not for Resale

Copyright International Organization for Standardization
Reproduced by IHS under license with ISO
No reproduction or networking permitted without license from IHS
Not for Resale

Information technology — 120 mm (4,7 Gbytes per side) and 80 mm (1,46 Gbytes per side) DVD rewritable disk (DVD-RAM)

Section 1 - General

1 Scope

This International Standard specifies the mechanical, physical and optical characteristics of an optical disk, identified as DVD Rewritable Disk (DVD-RAM), to enable interchange of such disks. It specifies the quality of the recorded signals, the format of the data and the recording method, thereby allowing for information interchange by means of such disks. The data can be written, read and overwritten many times using the phase change method. Two Types are specified that differ only by their diameter of 120 mm and 80 mm, and the resulting difference of capacity.

This International Standard specifies

- two related but different Types of this disk (see clause 7),
- the conditions for conformance,
- the environments in which the disk is to be tested, operated and stored,
- the mechanical, physical and dimensional characteristics of the disk, so as to provide mechanical interchange between data processing systems,
- the format of the information on the disk, including the physical disposition of the tracks and sectors, the error correcting codes and the coding method,
- the characteristics of the signals recorded on the disk, thus enabling data processing systems to read the data from the disk.

This International Standard provides for the interchange of disks between optical disk drives. Together with a standard for volume and file structure, it provides for full data interchange between data processing systems. The optical disks specified by this International Standard may be enclosed in cases according to ISO/IEC 17594 as specified therein.

2 Conformance

2.1 Optical Disk

A claim of conformance with this International Standard shall specify the Type implemented. An optical disk shall be in conformance with this International Standard if it meets all mandatory requirements specified for this Type.

2.2 Generating system

A generating system shall be in conformance with this International Standard if the optical disk it generates is in accordance with 2.1.

© ISO/IEC 2004 All rights reserved

Copyright International Organization for Standardization
Reproduced by IHS under license with ISO
No reproduction or networking permitted without license from IHS
Not for Resale

2.3 Receiving system

A receiving system shall be in conformance with this International Standard if it is able to handle both Types of optical disk according to 2.1.

3 Normative references

The following referenced documents are indispensable for the application of this document. For dated references, only the edition cited applies. For undated references, the latest edition of the referenced document (including any amendments) applies.

ISO/IEC 10646-1:2000, *Information technology — Universal Multiple-Octet Coded Character Set (UCS) — Part 1: Architecture and Basic Multilingual Plane*

ISO/IEC 17594:2004, *Information technology — Cases for 120 mm and 80 mm DVD-RAM disks*

ECMA-287:2002, *Safety of electronic equipment*

4 Terms and definitions

For the purposes of this document, the following definitions apply.

4.1
Case
The housing for an optical disk, that protects the disk and facilitates disk interchange.

4.2
Channel bit
The elements by which the binary values ZERO and ONE are represented by marks and pits on the disk.

4.3
Digital Sum Value (DSV)
The arithmetic sum obtained from a bit stream by allocating the decimal value 1 to Channel bits set to ONE and the decimal value -1 to Channel bits set to ZERO.

4.4
Disk Reference Plane
A plane defined by the perfectly flat annular surface of an ideal spindle onto which the clamping area of the disk is clamped, and which is normal to the axis of rotation.

4.5
Dummy substrate
A layer which may be transparent or not, provided for the mechanical support of the disk and/or a recording layer.

4.6
Embossed mark
A mark so formed as to be unalterable by optical means.

4.7
Entrance surface
The surface of the disk onto which the optical beam first impinges

4.8
Land and Groove
A trench-like feature of the disk, applied before the recording of any information, and used to define the track location. The groove is located nearer to the entrance surface than the land. The recording is made either on the centre of the groove or on the centre of the land.

--`,,`-`-`,,`,,`,`,,`---
© ISO/IEC 2004 – All rights reserved
Copyright International Organization for Standardization
Reproduced by IHS under license with ISO
No reproduction or networking permitted without license from IHS
Not for Resale

4.9
Mark
A feature of the Recording layer which may take the form of an amorphous domain, a pit, or any other type or form that can be sensed by the optical system. The pattern of marks and spaces represents the data on the disk.

4.10
Phase change
A physical effect by which the area of a recording layer irradiated by a laser beam is heated so as to change from an amorphous state to a crystalline state and vice versa.

4.11
Polarization
The direction of polarization of an optical beam is the direction of the electric vector of the beam.

NOTE The plane of polarization is the plane containing the electric vector and the direction of propagation of the beam. The polarization is right-handed when to an observer looking in the direction of propagation of the beam, the end-point of the electric vector would appear to describe an ellipse in the clockwise sense.

4.12
Recording layer
A layer of the disk on, or in, which data is written during manufacture and/or use.

4.13
Sector
The smallest addressable part of a track in the Information Zone of a disk that can be accessed independently of other addressable parts.

4.14
Space
A feature of the recording layer which may take the form of a crystalline domain, a non-pit or any other type or form that can be sensed by the optical system. The pattern of marks and spaces represents the data on the disk.

4.15
Substrate
A transparent layer of the disk, provided for mechanical support of the recorded layer(s), through which the optical beam can access a recording layer.

4.16
Track
A 360° turn of a continuous spiral.

4.17
Track pitch
The distance between centrelines of adjacent tracks (a groove and a land), measured in a radial direction.

4.18
ZCLV
A disk format requiring Zoned Constant Linear Velocity operations.

4.19
Zone
An annular area of the disk.

© ISO/IEC 2004 All rights reserved

Copyright International Organization for Standardization
Reproduced by IHS under license with ISO
No reproduction or networking permitted without license from IHS
Not for Resale

5 Conventions and notations

5.1 Representation of numbers

A measured value is rounded off to the least significant digit of the corresponding specified value. For instance, it implies that a specified value of 1,26 with a positive tolerance of + 0,01 and a negative tolerance of - 0,02 allows a range of measured values from 1,235 to 1,275.

Numbers in decimal notations are represented by the digits 0 to 9.

Numbers in hexadecimal notation are represented by the hexadecimal digits 0 to 9 and A to F in parentheses.

The setting of bits is denoted by ZERO and ONE.

Numbers in binary notations and bit patterns are represented by strings of digits 0 and 1, with the most significant bit shown to the left.

Negative values of numbers in binary notation are given as Two's complement.

In each field the data is recorded so that the most significant byte (MSB), identified as Byte 0, is recorded first and the least significant byte (LSB) last.

In a field of $8n$ bits, bit $b_{(8n-1)}$ shall be the most significant bit (msb) and bit b_0 the least significant bit (lsb). Bit $b_{(8n-1)}$ is recorded first.

A binary digit which can be set indifferently to ZERO or to ONE is represented by "x".

5.2 Names

The names of entities, e.g. specific tracks, fields, zones, etc. are given a capital initial.

6 List of acronyms

AM	Address Mark	MSB	Most Significant Byte
BCA	Burst Cutting Area	NRZ	Non Return to Zero
BPF	Band Pass Filter	NRZI	Non Return to Zero Inverted
DCC	DC Component Suppress Control	PA	Postamble
DDS	Disk Definition Structure	PDL	Primary Defect List
DMA	Defect Management Area	PED	P(ID) Error Detection code
DSV	Digital Sum Value	PI	Parity of Inner-code
ECC	Error Correcting Code	PID	Physical Identification Data
EDC	Error Detection Code	PLL	Phase-Locked Loop
HF	High Frequency	PO	Parity of Outer-Code
ID	Identification Data	PS	Pre-Synchronous Code
IED	ID Error Detection Code	RS	Reed-Solomon Code
LPF	Low Pass Filter	SDL	Secondary Defect List
lsb	least significant bit	SLR	Status of Linear Replacement
LSB	Least Significant Byte	SYNC Code	Synchronous Code
LSN	Logical Sector Number	VFO	Variable Frequency Oscillator
msb	most significant bit	ZCLV	Zoned Constant Linear Velocity

--`,,`,,`-`-`,,`,,`,`,,`---

© ISO/IEC 2004 – All rights reserved
Copyright International Organization for Standardization
Reproduced by IHS under license with ISO
No reproduction or networking permitted without license from IHS
Not for Resale

7 General description of the optical disk

The optical disk that is the subject of this International Standard consists of two substrates bonded together by an adhesive layer, so that the recording layer(s) is on the inside. The centring of the disk is performed on the edge of the centre hole of the assembled disk on the side currently read. Clamping is performed in the Clamping Zone. The area of the inner diameter of the Clamping Zone to the outer diameter of the Lead-out Zone shall be glued.

The two Types of disk specified by this International Standard are

Type 1S consists of a substrate, a single recording layer and a dummy substrate. The recording layer can be accessed from one side only. The nominal capacity is 4,7 Gbytes for a 120 mm disk and 1,46 Gbytes for an 80 mm disk.

Type 2S consists of two substrates and two recording layers. From one side of the disk, only one of these recording layers can be accessed. The nominal capacity is 9,4 Gbytes for a 120 mm disk and 2,92 Gbytes for an 80 mm disk.

In Type 1S, the recording layer may also be placed, for instance embossed, on the dummy substrate.

When used with the cases specified in ISO/IEC 17594, a 120 mm disk of Type 1S may be enclosed in either a Type 1, a Type 2, a Type 3 or a Type 5 case; a 120 mm disk of Type 2S may be enclosed in either a Type 1, a Type 3, a Type 4 or a Type 5 case; an 80 mm disk of Type 1S may be enclosed in either a Type 7 or a Type 9 case; an 80 mm disk of Type 2S may be enclosed in either a Type 6 or a Type 8 case.

Data can be written onto the disk as marks in the form of amorphous spots in the crystalline recording layer and can be overwritten with a focused optical beam, using the phase change effect between amorphous and crystalline states. The data can be read with a focused optical beam, using phase change effect as the reflective difference between amorphous and crystalline states. The beam accesses the recording layer through a transparent substrate of the disk.

Part of the disk contains read-only data for the drive in the form of pits embossed by the manufacturer. This data can be read using the diffraction of the optical beam by the embossed pits.

Figure 1 shows schematically the two Types.

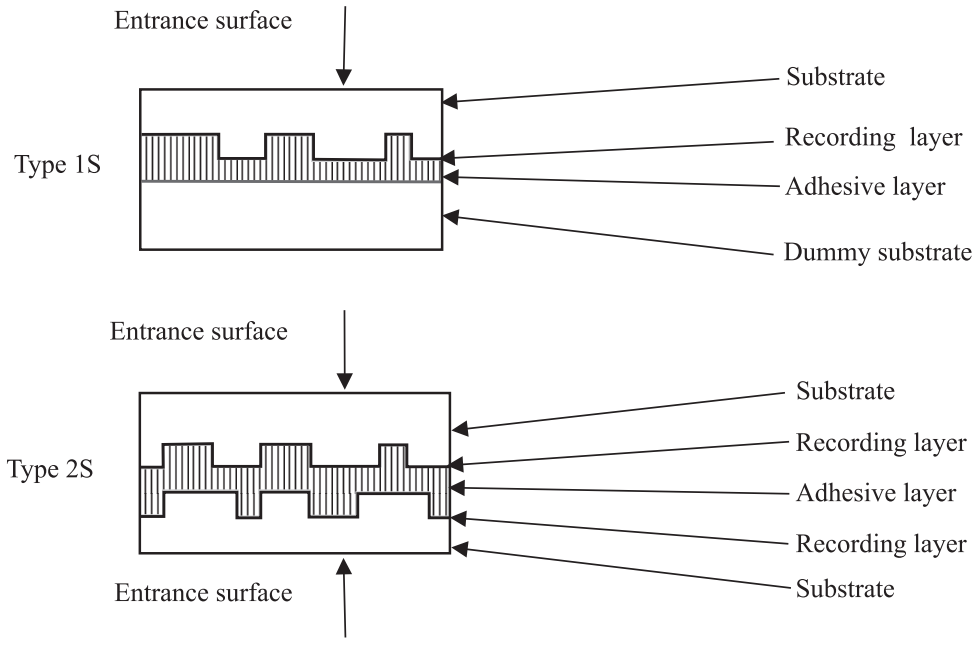

Figure 1 – The two Types of DVD-RAM disks

© ISO/IEC 2004 All rights reserved
Copyright International Organization for Standardization
Reproduced by IHS under license with ISO
No reproduction or networking permitted without license from IHS
Not for Resale

8 General requirements

8.1 Environments

8.1.1 Test environment

In the test environment, the air immediately surrounding the disk shall have the following properties.

Temperature:	23 °C ± 2 °C
Relative humidity:	50 % ± 5 %
Atmospheric pressure:	86 kPa to 106 kPa

No condensation on or in the disk shall occur. Before testing, the disk shall be conditioned in this environment for 48 hours minimum. It is recommended that, before testing, the entrance surface of the optical disk shall be cleaned according to the instructions of the manufacturer of the disk.

Unless otherwise stated, all tests and measurements shall be made in this test environment.

8.1.2 Operating environment

This International Standard requires that a disk which meets all requirements of this International Standard in the specified test environment shall provide data interchange over the specified ranges of environmental parameters in the operating environment.

The operating environment is the environment where the air immediately surrounding the disk has the following properties.

Temperature:	5 °C to 60 °C
Relative humidity:	3 % to 85 %
Absolute humidity:	1 g/m^3 to 30 g/m^3
Temperature gradient:	10 °C/h max.
Relative humidity gradient:	10 %/h max.

No condensation on the disk shall occur. If the disk has been exposed to conditions outside those specified above, it shall be acclimatized in the operating environment for at least 2 h before use.

8.1.3 Storage environment

The storage environment is defined as an environment where the air immediately surrounding the disk shall have the following properties.

Temperature:	-10 °C to 50 °C
Relative humidity:	3 % to 85 %
Absolute humidity:	1 g/m^3 to 30 g/m^3
Atmospheric pressure:	75 kPa to 106 kPa
Temperature gradient:	10°C/h max.
Relative humidity gradient:	10 %/h max.

No condensation on the disk shall occur.

8.1.4 Transportation

This International Standard does not specify requirements for transportation; guidance is given in annex L.

8.2 Safety requirement

The optical disk shall satisfy the safety requirements of Standard ECMA-287. The cartridge and its components shall not constitute any safety or health hazard when used in the intended manner or in any foreseeable use in an information processing system.

8.3 Flammability

The disk shall be made from materials that, if ignited from a match flame, do not continue to burn in a still carbon dioxide atmosphere.

© ISO/IEC 2004 – All rights reserved
Copyright International Organization for Standardization
Reproduced by IHS under license with ISO
No reproduction or networking permitted without license from IHS
Not for Resale

9 Reference Drive

The Reference Drive shall be used for the measurement of optical parameters for conformance with the requirements of this International Standard. The critical components of this device have the characteristics specified in this clause.

9.1 Optical Head

The basic set-up of the optical system of the Reference Drive used for measuring the overwrite and read parameters are shown in figure 2. Different components and locations of components are permitted, provided that the performance remains the same as that of the set-up in figure 2. The optical system shall be such that the detected light reflected from the entrance surface of the disk is minimized so as not to influence the accuracy of the measurements.

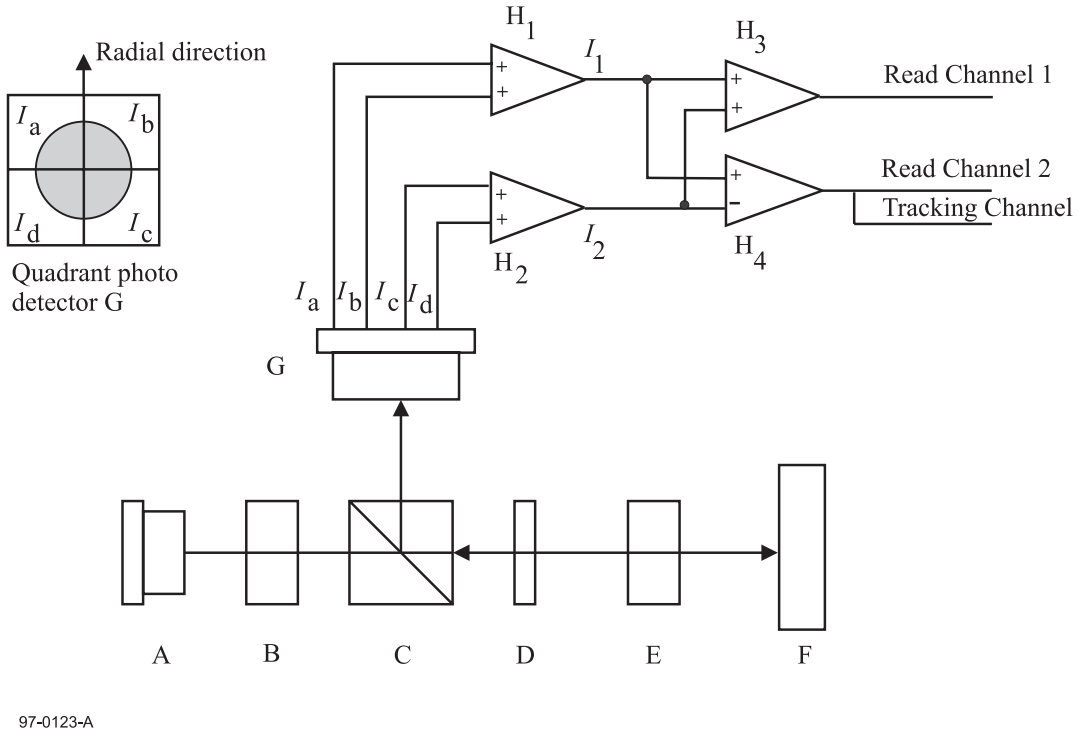

A	Laser diode	F	Optical disk
B	Collimator lens	G	Quadrant photo detector
C	Polarizing beam splitter	H_1, H_2, H_3, H_4	d.c.-coupled amplifier
D	Quarter-wave plate	I_a, I_b, I_c, I_d	Output currents from the quadrant photo detector
E	Objective lens		

Figure 2 - Optical system of the Reference Drive

The combination of polarizing beam splitter C and a quarter-wave plate D shall separate the entrance optical beam from a laser diode A and the reflected optical beam from an optical disk F. The beam splitter C shall have a p-s intensity reflectance ratio of at least 100.

The focused optical beam used for writing and reading data shall have the following properties:

Wavelength (λ)	650 nm $^{+10\ nm}_{-5\ nm}$
Polarization	circularly polarized light

© ISO/IEC 2004 All rights reserved

Copyright International Organization for Standardization
Reproduced by IHS under license with ISO
No reproduction or networking permitted without license from IHS
Not for Resale

Polarizing beam splitter	shall be used unless otherwise stated.
Numerical aperture	0,60 ± 0,01
Light intensity at the rim of the pupil of the objective lens	30 % to 55 % of the maximum intensity level in the radial direction at least 50 % of the maximum intensity level in the tangential direction
Wave front aberration after passing through an ideal substrate of the single layer disk (Thickness: 0.6mm and index refraction: 1.56)	0,033 λ rms max.
Relative Intensity Noise (RIN) of the laser diode 10 log [(a.c. power density/Hz) / d.c. light power]	-134 dB/Hz max.

9.2 Read channels

A Read channel 1 shall detect the total amount of light in the exit pupil of the objective lens.

A Read channel 2 shall detect the differential output of the quadrant photo detectors.

Frequency characteristics of the equalizer, characteristics of the PLL, slicer etc. are specified in annex F.

9.3 Rotation speed

The actual rotation speed shall be within 1 % of the nominal rotation speed(s) specified in tables 3 and 4.

9.4 Disk clamping

Clamping force: 2,0 N ± 0,5 N

Tapered cone angle: 40,0° ± 0,5° (see annex E)

9.5 Normalized servo transfer function

In order to specify the servo system for axial and radial tracking, a function H_s is used (equation I). It specifies the nominal values of the open-loop transfer function H of the Reference Servo(s) in the frequency range 31,2 Hz to 10 kHz.

$$H_s(\mathrm{i}\omega) = \frac{1}{3} \times \left(\frac{\omega_o}{\mathrm{i}\omega} \right)^2 \times \frac{1 + \frac{3\mathrm{i}\omega}{\omega_o}}{1 + \frac{\mathrm{i}\omega}{3\omega_o}} \qquad \text{(I)}$$

where

$\omega = 2\pi f$

$\omega_o = 2\pi f_o$

$\mathrm{i} = \sqrt{-1}$

f_o is the 0 dB crossover frequency of the open loop transfer function. The crossover frequencies of the lead-lag network of the servo are given by

lead break frequency $f_1 = f_o \times 1/3$

lag break frequency $f_2 = f_o \times 3$.

9.6 Reference Servo for axial tracking

For an open loop transfer function H of the Reference Servo for axial tracking, $|1+H|$ is limited as schematically shown by the shaded surface of figure 3.

© ISO/IEC 2004 – All rights reserved
Copyright International Organization for Standardization
Reproduced by IHS under license with ISO
No reproduction or networking permitted without license from IHS
Not for Resale

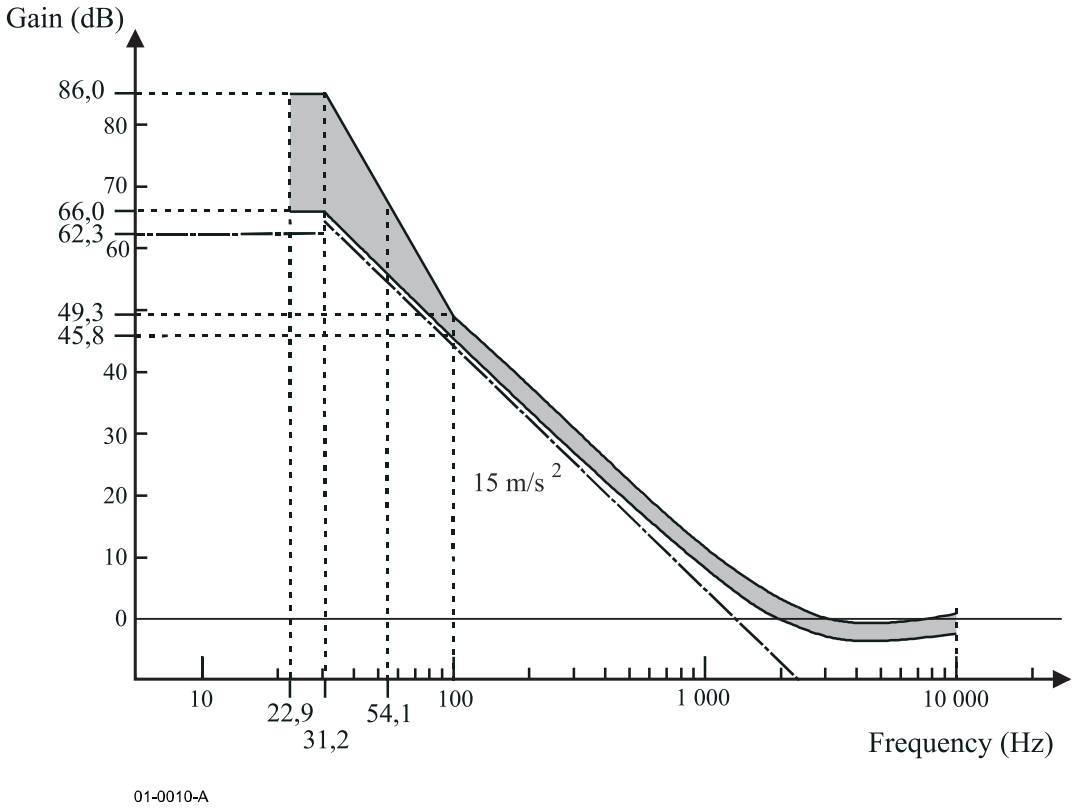

Figure 3 - Reference Servo for axial tracking

Bandwidth 100 Hz to 10 kHz

$|1 + H|$ shall be within 20 % of $|1+H_s|$.

The crossover frequency $f_o = \omega_o / 2\pi$ shall be specified by equation (II), where $\alpha_{max.}$ shall be 1,5 times larger than the expected maximum axial acceleration of 15 m/s^2. The tracking error $e_{max.}$ shall not exceed 0,23 µm. Thus the crossover frequency f_o shall be

$$f_0 = \frac{1}{2\pi}\sqrt{\frac{3\alpha_{max}}{e_{max}}} = \frac{1}{2\pi}\sqrt{\frac{15\times1,5\times3}{0,23\times10^{-6}}} = 2,7\text{kHz}\,. \qquad \text{(II)}$$

The axial tracking error $e_{max.}$ is the peak deviation measured axially above or below the 0 level.

Bandwidth 31,2 Hz to 100 Hz

$|1 + H|$ shall be within the limits defined by the following four points.

45,8 dB at 100 Hz ($|1 + Hs|$ - 20 % at 100 Hz)

66,0 dB at 31,2 Hz ($|1 + Hs|$ - 20 % at 31,2 Hz)

86,0 dB at 31,2 Hz ($|1 + Hs|$ - 20 % at 31,2 Hz add 20 dB)

49,3 dB at 100 Hz ($|1 + Hs|$ + 20 % at 100 Hz)

Bandwidth 22,9 Hz to 31,2 Hz

$|1 + H|$ shall be between 66,0 dB and 86,0 dB.

© ISO/IEC 2004 All rights reserved
Copyright International Organization for Standardization
Reproduced by IHS under license with ISO
No reproduction or networking permitted without license from IHS
Not for Resale

9.7 Reference Servo for radial tracking

For an open-loop transfer function H of the Reference Servo for radial tracking, $|1+H|$ is limited as schematically shown by the shaded surface of figure 4.

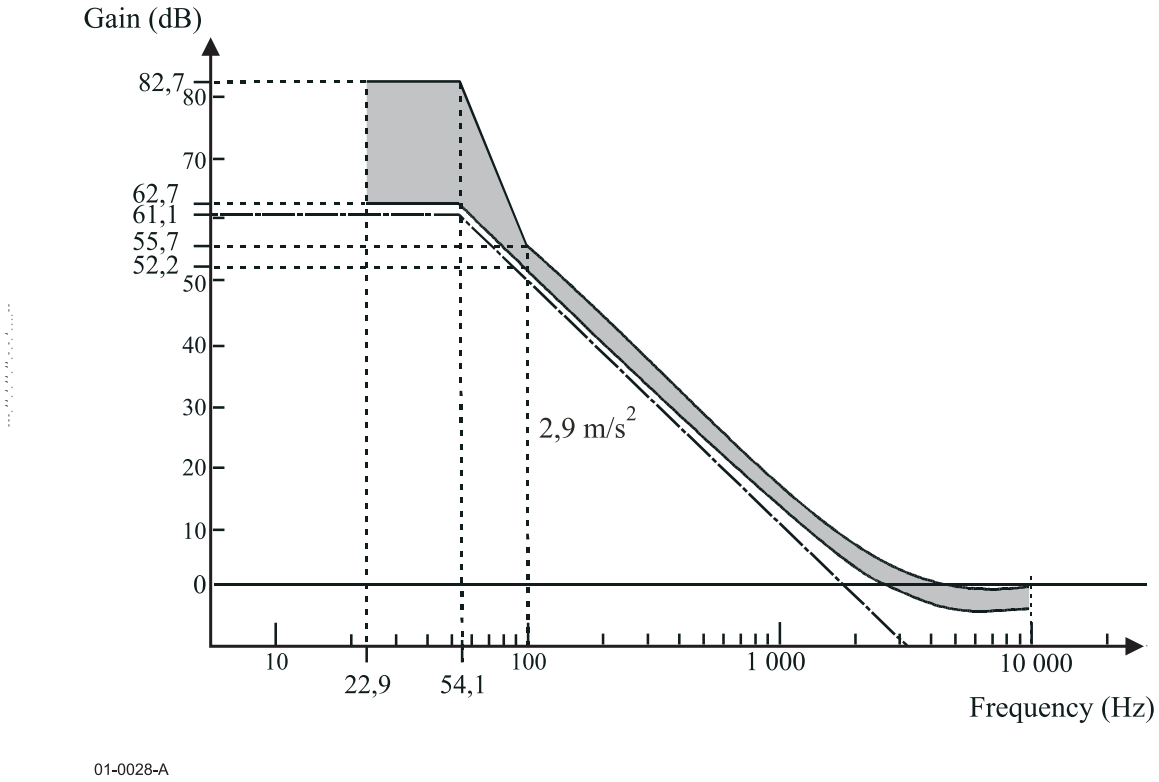

Figure 4 - Reference Servo for radial tracking

Bandwidth from 100 Hz to 10 kHz

$|1 + H|$ shall be within 20 % of $|1 + H_s|$.

The crossover frequency $f_o = \omega_o / 2\pi$ shall be specified by equation (III), where $\alpha_{max.}$ shall be 1,5 times larger than the expected maximum radial acceleration of 2,9 m/s^2. The tracking error $e_{max.}$ shall not exceed 0,022 µm. Thus the crossover frequency f_o shall be

$$f_0 = \frac{1}{2\pi}\sqrt{\frac{3\alpha_{\max}}{e_{\max}}} = \frac{1}{2\pi}\sqrt{\frac{2{,}9\times 1{,}5\times 3}{0{,}022\times 10^{-6}}} = 3{,}9\text{kHz}\,. \qquad \text{(III)}$$

The radial tracking error is the peak deviation measured radially inwards or outwards the 0 level.

Bandwidth from 54,1 Hz to 100 Hz

$|1 + H|$ shall be within the limits defined by the following four points.

52,2 dB at 100 Hz ($|1 + Hs|$ - 20 % at 100 Hz)

62,7 dB at 54,1 Hz ($|1 + Hs|$ - 20 % at 54,1 Hz)

82,7 dB at 54,1 Hz ($|1 + Hs|$ - 20 % at 54,1 Hz add 20 dB)

55,7 dB at 100 Hz ($|1 + Hs|$ + 20 % at 100 Hz)

Bandwidth from 22,9 Hz to 54,1 Hz

$|1 + H|$ shall be between 62,7 dB and 82,7 dB.

© ISO/IEC 2004 – All rights reserved
Copyright International Organization for Standardization
Reproduced by IHS under license with ISO
No reproduction or networking permitted without license from IHS
Not for Resale

Section 2 - Dimensional, mechanical and physical characteristics of the disk

10 Dimensional characteristics

Dimensional characteristics are specified for those parameters deemed mandatory for interchange and compatible use of the disk. Where there is freedom of design, only the functional characteristics of the elements described are indicated. The enclosed drawings show the dimensional requirements in summarized form. The different parts of the disk are described from the centre hole to the outside rim.

The dimensions are referred to two Reference Planes P and Q.

Reference Plane P is the primary Reference Plane. It is the plane on which the bottom surface of the Clamping Zone (see 10.4) rests.

Reference Plane Q is the plane parallel to Reference Plane P at the height of the top surface of the Clamping Zone.

See figures 5 to 7.

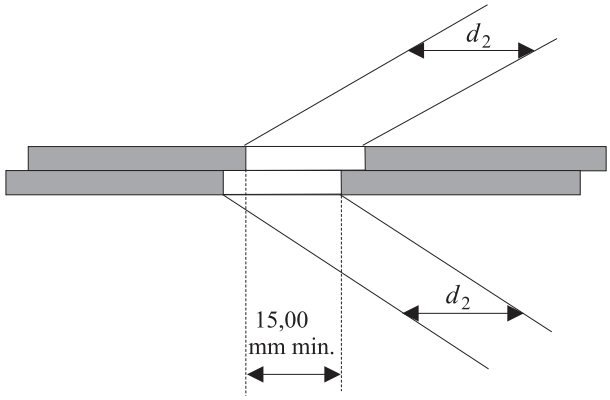

Figure 5 - Hole of the assembled disk

© ISO/IEC 2004 All rights reserved
Copyright International Organization for Standardization
Reproduced by IHS under license with ISO
No reproduction or networking permitted without license from IHS
Not for Resale

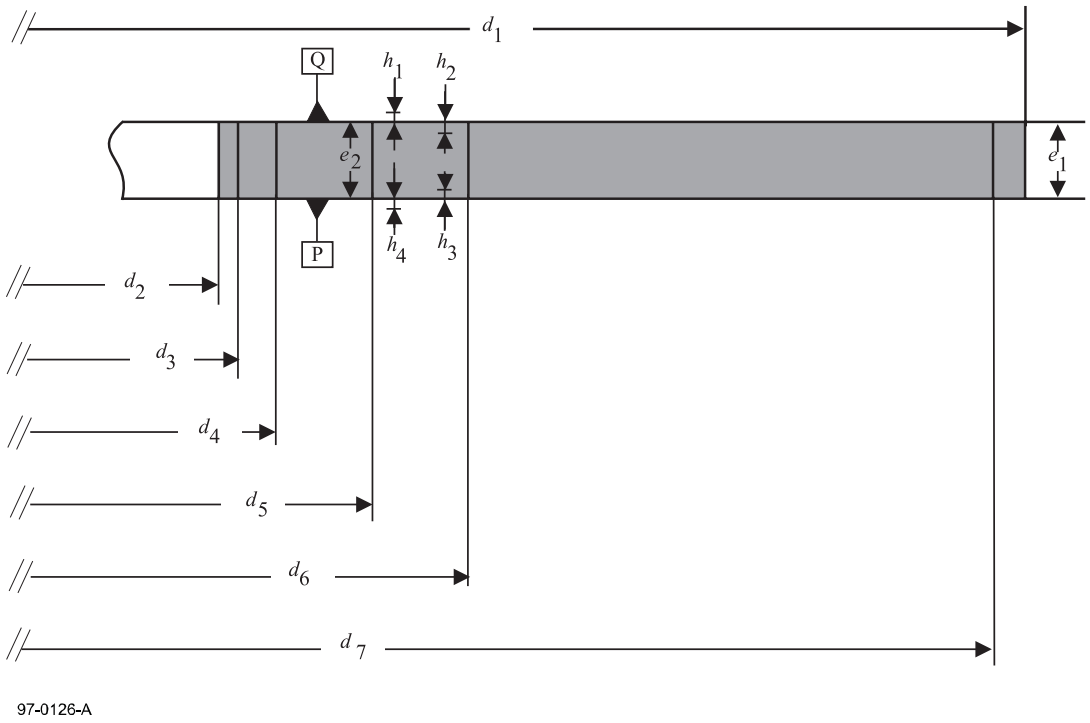

Figure 6 - Areas of the disk

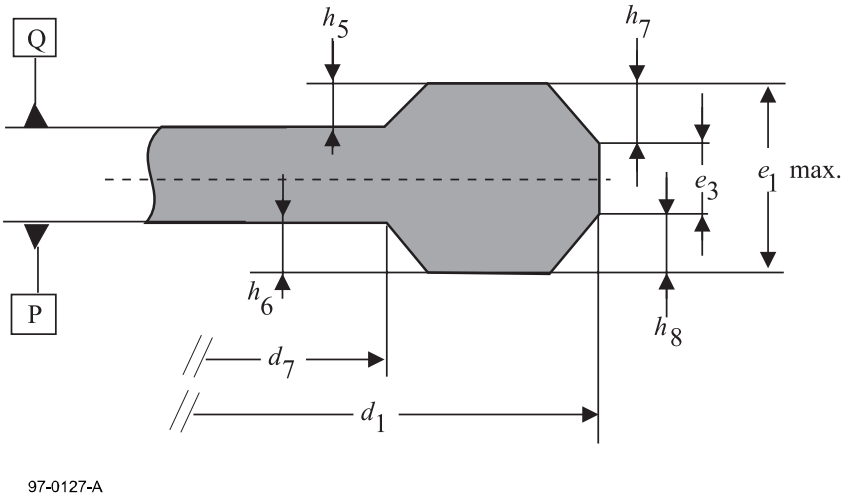

Figure 7 - Rim area

10.1 Overall dimensions

The 120 mm disk shall have an overall diameter

d_1 = 120,00 mm ± 0,30 mm.

The 80 mm disk shall have an overall diameter

d_1 = 80,00 mm ± 0,30 mm.

The centre hole of a substrate or a dummy substrate shall have a diameter

$$d_2 = 15{,}00 \text{ mm}\ {}^{+\ 0{,}15\ \text{mm}}_{-\ 0{,}00\ \text{mm}}.$$

© ISO/IEC 2004 – All rights reserved
Copyright International Organization for Standardization
Reproduced by IHS under license with ISO
No reproduction or networking permitted without license from IHS
Not for Resale

The diameter of the hole of an assembled disk, i.e. with both parts bonded together, shall be 15,00 mm min., see figure 5.

There shall be no burr on both edges of the centre hole.

The edge of the centre hole shall be rounded off or chamfered. The rounding radius shall be 0,1 mm max. The height of the chamfer shall not exceed 0,1 mm.

The thickness of the disk, including adhesive layer, spacer(s) and label(s), shall be

$$e_1 = 1{,}20 \text{ mm}^{+0{,}30 \text{ mm}}_{-0{,}06 \text{ mm}}.$$

10.2 First transition area

In the area extending between diameter d_2 and diameter

d_3 = 16,0 mm min.

the surface of the disk is permitted to be above Reference Plane P and/or below Reference Plane Q by 0,10 mm max.

10.3 Second transition area

This area shall extend between diameter d_3 and diameter

d_4 = 22,0 mm max.

In this area the disk may have an uneven surface or burrs up to 0,05 mm max. beyond Reference Planes P and/or Q.

10.4 Clamping Zone

This zone shall extend between diameter d_4 and diameter

d_5 = 33,0 mm min.

Each side of the Clamping Zone shall be flat within 0,1 mm. The top side of the Clamping Zone, i.e. that of Reference Plane Q shall be parallel to the bottom side, i.e. that of Reference Plane P within 0,1 mm.

In the Clamping Zone the thickness e_2 of the disk shall be

$$e_2 = 1{,}20 \text{ mm}^{+0{,}20 \text{ mm}}_{-0{,}10 \text{ mm}}.$$

10.5 Third transition area

This area shall extend between diameter d_5 and diameter

d_6 = 44,0 mm max.

In this area the top surface is permitted to be above Reference Plane Q by

h_1 = 0,25 mm max.

or below Reference Plane Q by

h_2 = 0,10 mm max.

The bottom surface is permitted to be above Reference Plane P by

h_3 = 0,10 mm max.

or below Reference Plane P by

h_4 = 0,25 mm max.

--`,,`-`-`,,`,,`,`,,`---

© ISO/IEC 2004 All rights reserved

Copyright International Organization for Standardization
Reproduced by IHS under license with ISO
No reproduction or networking permitted without license from IHS
Not for Resale

An Information Zone of the 120 mm disk shall extend from diameter d_6 to diameter

$$d_7 = 117{,}2 \text{ mm}^{+0{,}0 \text{ mm}}_{-0{,}4 \text{ mm}}.$$

An Information Zone of the 80 mm disk shall extend from diameter d_6 to diameter

$$d_7 = 77{,}0 \text{ mm}^{+0{,}0 \text{ mm}}_{-0{,}4 \text{ mm}}.$$

10.6 Rim area

The rim area shall extend from diameter d_7 to diameter d_1 (see figure 7). In this area the top surface is permitted to be above Reference Plane Q by

$h_5 = 0{,}1$ mm max.

and the bottom surface is permitted to be below Reference Plane P by

$h_6 = 0{,}1$ mm max.

The total thickness of this area shall not be greater than 1,50 mm, i.e. the maximum value of e_1. The thickness of the rim proper shall be

$e_3 = 0{,}6$ mm min.

The outer edges of the disk shall be either rounded off with a rounding radius of 0,2 mm max. or be chamfered over

$h_7 = 0{,}2$ mm max.

$h_8 = 0{,}2$ mm max.

10.7 Remark on tolerances

All heights specified in the preceding clauses and indicated by h_i are independent from each other. This means that, for example, if the top surface of the third transition area is below Reference Plane Q by up to h_2, there is no implication that the bottom surface of this area has to be above Reference Plane P by up to h_3. Where dimensions have the same - generally maximum - numerical value, this does not imply that the actual values have to be identical.

10.8 Label

A disk without a case or a disk within a Type 2, a Type 4, a Type 6 or a Type 7 case shall have a label placed on the side of the disk opposite the entrance surface for the information to which the label is related. The label shall be placed either on an outer surface of the disk or inside the disk bonding plane. In the former case, the label shall not extend over the Clamping Zone. In the latter case, the label may extend over the Clamping Zone. In both cases, the label shall not extend over the rim of the centre hole nor over the outer edge of the disk.

11 Mechanical characteristics

11.1 Mass

The mass of the 120 mm disk shall be in the range 14,0 g to 20,0 g.

The mass of the 80 mm disk shall be in the range 6,0 g to 9,0 g.

11.2 Moment of inertia

The moment of inertia of the 120 mm disk, relative to its rotation axis, shall not exceed 0,040 g·m^2.

© ISO/IEC 2004 – All rights reserved
Copyright International Organization for Standardization
Reproduced by IHS under license with ISO
No reproduction or networking permitted without license from IHS
Not for Resale

The moment of inertia of the 80 mm disk, relative to its rotation axis, shall not exceed 0,010 g·m^2.

11.3 Dynamic imbalance

The dynamic imbalance of the 120 mm disk, relative to its rotation axis, shall not exceed 0,010 g·m.

The dynamic imbalance of the 80 mm disk, relative to its rotation axis, shall not exceed 0,0045 g·m.

11.4 Sense of rotation

The sense of rotation of the disk shall be counter clockwise as seen by the optical system.

11.5 Runout

11.5.1 Axial runout

When measured by the Optical Head with the Reference Servo for axial tracking, the disk rotating at the scanning velocity, the deviation of the recorded layer from its nominal position in the direction normal to the Reference Planes shall not exceed 0,3 mm for the 120 mm disk and 0,2 mm for the 80 mm disk.

The residual tracking error below 10 kHz, measured using the Reference Servo for axial tracking, shall not exceed 0,23 μm. The measuring filter shall be a Butterworth LPF, f_c (-3dB) : 10 kHz, slope : -80 dB/decade.

11.5.2 Radial runout

The runout of the outer edge of the disk shall not exceed 0,30 mm, peak-to-peak.

The radial runout of tracks shall not exceed 50 μm, peak-to-peak.

The residual tracking error below 2,3 kHz, measured using the Reference Servo for radial tracking, shall not exceed 0,022 μm. The measuring filter shall be a Butterworth LPF, f_c (-3dB) : 2,3 kHz, slope : -80 dB/decade.

The rms noise value of the residual error signal in the frequency band from 2,3 kHz to 10 kHz, measured with an integration time of 20 ms, using the Reference Servo for radial tracking, shall not exceed 0,016 μm in the Rewritable Area and shall not exceed 0,025 μm in the Embossed Area (refer to clause 13). The measuring filter shall be a Butterworth BPF, frequency range (-3 dB) : 2,3 kHz, slope : +80 dB/decade to 10 kHz, slope : -80 dB/decade.

12 Optical characteristics

12.1 Index of refraction

The index of refraction of the transparent substrate shall be 1,55 ± 0,10.

12.2 Thickness of the transparent substrate

The thickness of the transparent substrate shall be a function of its index of refraction as specified in figure 8.

12.3 Angular deviation

The angular deviation is the angle α between a parallel incident beam and the reflected beam. The incident beam shall have a diameter in the range 0,3 mm to 3,0 mm. This angle includes deflection due to the entrance surface and to unparallelism of the recorded layer, see figure A.1. It shall meet the following requirements when measured according to annex A.

In radial direction: α = 0,70° max.

In tangential direction: α = 0,30° max.

© ISO/IEC 2004 All rights reserved

Copyright International Organization for Standardization
Reproduced by IHS under license with ISO
No reproduction or networking permitted without license from IHS
Not for Resale

12.4 Birefringence of the transparent substrate

The birefringence of the transparent substrate shall be 60 nm max. when measured according to annex B.

12.5 Reflectivity

When measured according to annex D, the reflectivity of the recorded layer(s) shall be in the range 15 % to 25 %.

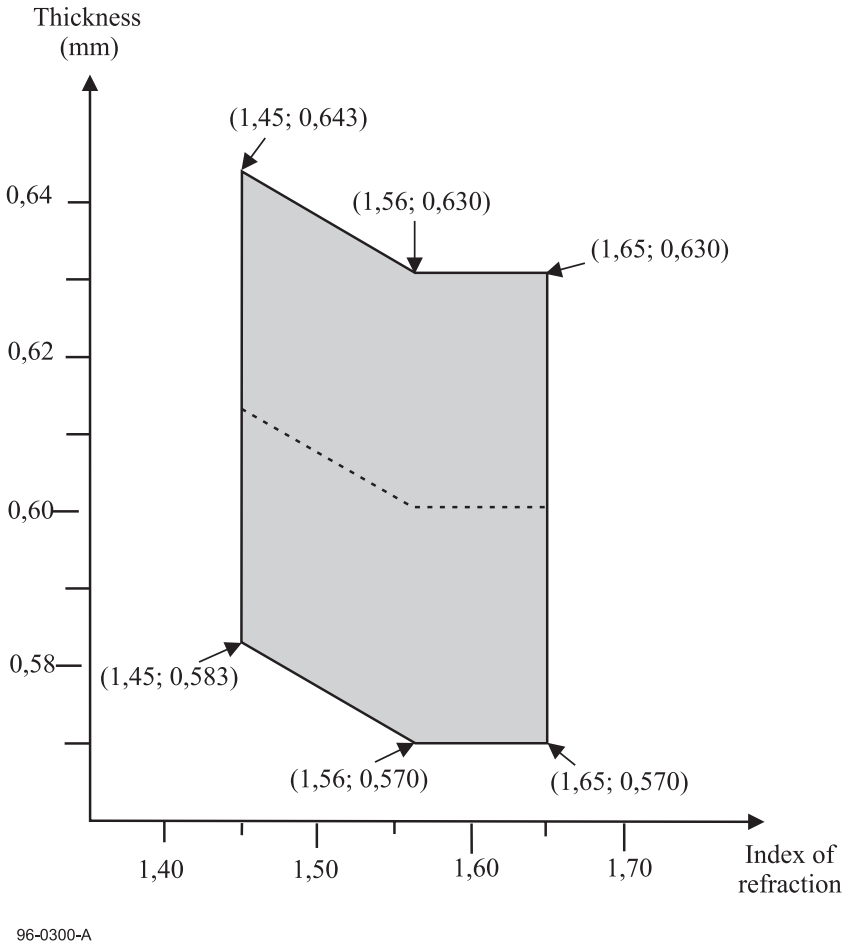

Figure 8 - Thickness of the substrate in function of the index of refraction

© ISO/IEC 2004 – All rights reserved
Copyright International Organization for Standardization
Reproduced by IHS under license with ISO
No reproduction or networking permitted without license from IHS
Not for Resale

Section 3 - Format of information

13 Data format

The data received from the host, called Main Data, is formatted in a number of steps before being recorded on the disk. It is transformed successively into

- a Data Frame
- a Scrambled Frame
- an ECC Block
- a Recording Frame
- a Recorded Data Field

These steps are specified in the following clauses.

13.1 Data Frames

A Data Frame shall consist of 2 064 bytes arranged in an array of 12 rows containing each 172 bytes (see figure 9). The first row shall start with three fields, called Data Identification Data (Data ID), ID Error Detection Code (IED), and Reserved bytes (RSV), followed by 160 Main Data bytes. The next 10 rows shall each contain 172 Main Data bytes, and the last row shall contain 168 Main Data bytes followed by four bytes for recording an Error Detection Code (EDC). The 2 048 Main Data bytes are identified as D_0 to D_{2047}.

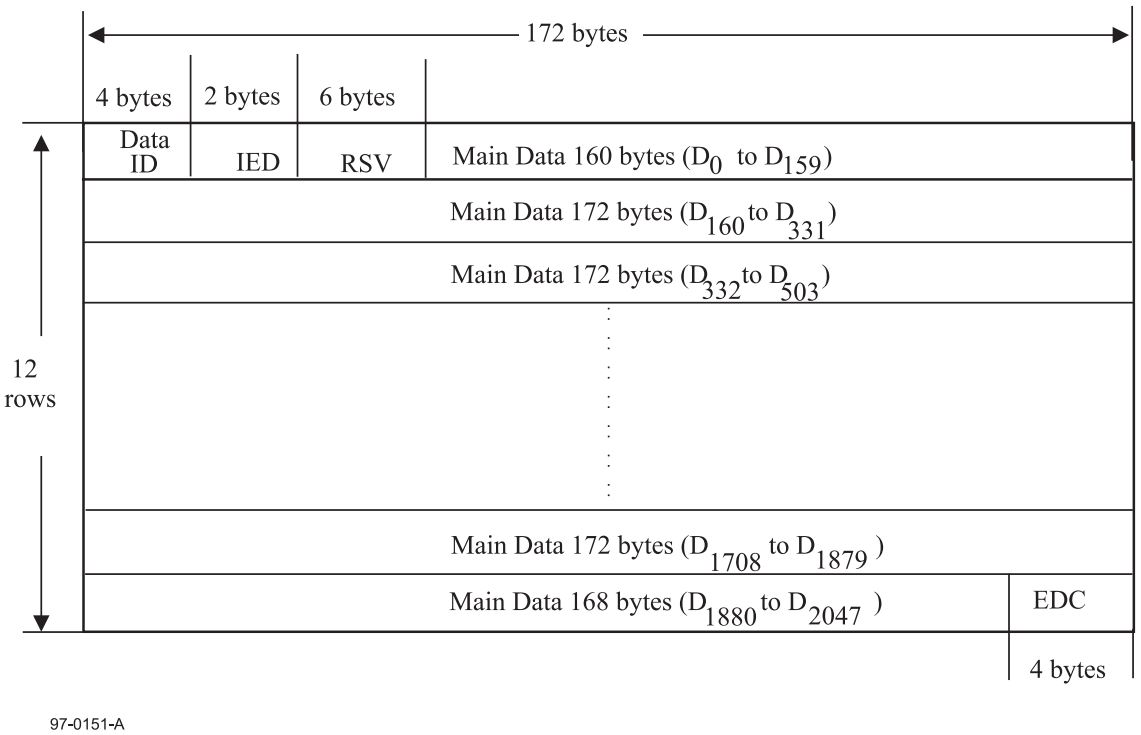

Figure 9 - Data Frame

© ISO/IEC 2004 All rights reserved
Copyright International Organization for Standardization
Reproduced by IHS under license with ISO
No reproduction or networking permitted without license from IHS
Not for Resale

13.1.1 Data ID

This field shall consist of four bytes, the bits of which are numbered consecutively from b_0 (lsb) to b_{31} (msb), see figures 10 and 11.

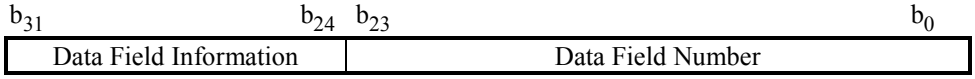

Figure 10 - Data ID

b_{31}	b_{30}	b_{29}	b_{28}	b_{27}	b_{26}	b_{25}	b_{24}
Sector Format type	Tracking method	Reflectivity	Recording type	Zone type		Data type	Layer number

Figure 11 - Data Field Information

The bits of the Data Field Information field shall be set as follows:

Bit b_{31} shall be set to ONE, indicating Zoned format type.

Bit b_{30} shall be set to

ZERO in the Embossed Area, indicating pit tracking (see 16.1),
ONE in the Rewritable Area, indicating groove tracking (see 16.1).

Bit b_{29} shall be set to ONE, indicating that the reflectivity does not exceed 40 %.

Bit b_{28} shall be set to

ZERO in the Embossed Area (see 16.1), in the Lead-in Zone (see 16.2), in the Lead-out Zone (see 16.4) and for a Block in the Data Zone (see 16.3) containing data to which Linear Replacement Algorithm (see 17.5) is applied if the Block is defective,

ONE for a Block in the Data Zone (see 16.3) containing data to which Linear Replacement. Algorithm is not applied even if the Block is defective.

Bits b_{27} and b_{26} shall be set to

ZERO ZERO in the Data Zone,
ZERO ONE in the Lead-in Zone,
ONE ZERO in the Lead-out Zone.

Bit b_{25} shall be set to

ZERO in the Embossed Area,
ONE in the Rewritable Area.

Bit b_{24} shall be set to ZERO, indicating that through an entrance surface only one recording layer can be accessed.

Bits b_{23} to b_0 shall be set to the sector number in the Embossed Area (see 16.1), in the DMAs (see 17.1) and in the Reserved Zones of the Lead-in Zone (see 16.2) and of the Lead-out Zone (see 16.4), to the values specified in 17.8.3 in the Data Zone (see 16.3).

Other settings are prohibited by this International Standard, see also annex L.

13.1.2 Data ID Error Detection code (IED)

When identifying all bytes of the array shown in figure 9 as $C_{i,j}$ for i = 0 to 11 and j = 0 to171, the bytes of IED are represented by $C_{0,j}$ for j = 4 to 5. Their setting is obtained as follows:

$$IED(x) = \sum_{j=4}^{5} C_{0,j}\, x^{5-j} \quad = \quad I(x)\, x^2 \mod G_E(x)$$

© ISO/IEC 2004 – All rights reserved
Copyright International Organization for Standardization
Reproduced by IHS under license with ISO
No reproduction or networking permitted without license from IHS
Not for Resale

where:

$$I(x) = \sum_{j=0}^{3} C_{0,j}\, x^{3-j}$$

$$G_E(x) = \prod_{k=0}^{1} (x + \alpha^k)$$

α is the primitive root of the primitive polynomial $P(x) = x^8 + x^4 + x^3 + x^2 + 1$.

13.1.3 Reserved bytes

All the bytes of this 6-byte field shall be set to (00).

13.1.4 Error Detection Code (EDC)

This 4-byte field shall contain an Error Detection Code computed over the preceding 2 060 bytes of the Data Frame. Considering the Data Frame as a single bit field starting with the most significant bit of the first byte of the ID field and ending with the least significant bit of the EDC field, then this msb will be $b_{16\,511}$ and the lsb will be b_0. Each bit b_i of the EDC is as follows for i = 31 to 0:

$$EDC(x) = \sum_{i=31}^{0} b_i\, x^i = I(x) \mod G(x)$$

where:

$$I(x) = \sum_{i=16\,511}^{32} b_i\, x^i$$

$$G(x) = x^{32} + x^{31} + x^4 + 1.$$

13.2 Scrambled Frames

The 2 048 Main Data bytes shall be scrambled by means of the circuit shown in figure 12 which shall consist of a feedback bit shift register in which bits r_7 (msb) to r_0 (lsb) represent a scrambling byte at each 8-bit shift. At the beginning of the scrambling procedure of a Data Frame, positions r_{14} to r_0 shall be pre-set to the value(s) specified in table 3. The same pre-set value shall be used for 16 consecutive Data Frames. After 16 groups of 16 Data Frames, the sequence is repeated. The initial pre-set number is equal to the value represented by bits b_7 (msb) to bit b_4 (lsb) of the Data ID field of the Data Frame. Table 1 specifies the initial pre-set value of the shift register corresponding to the 16 initial pre-set numbers.

Table 1 - Initial values of the shift register

Initial pre-set number	Initial pre-set value	Initial pre-set number	Initial pre-set value
(0)	(0001)	(8)	(0010)
(1)	(5500)	(9)	(5000)
(2)	(0002)	(A)	(0020)
(3)	(2A00)	(B)	(2001)
(4)	(0004)	(C)	(0040)
(5)	(5400)	(D)	(4002)
(6)	(0008)	(E)	(0080)
(7)	(2800)	(F)	(0005)

© ISO/IEC 2004 All rights reserved

Copyright International Organization for Standardization
Reproduced by IHS under license with ISO
No reproduction or networking permitted without license from IHS
Not for Resale

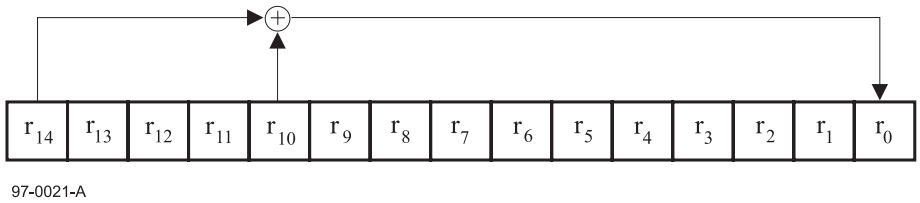

Figure 12 - Feedback shift register

The part of the initial value of r_7 to r_0 is taken out as scrambling byte S_0. After that, 8-bit shift is repeated 2 047 times and the following 2 047 bytes shall be taken from r_7 to r_0 as scrambling bytes S_1 to $S_{2\,047}$. The Main Data bytes D_k of the Data Frame become scrambled bytes D'_k where

$D'_k = D_k \oplus S_k$ for k = 0 to 2 047,

$\oplus$ stands for Exclusive OR.

13.3 ECC Blocks

An ECC Block is formed by arranging 16 consecutive Scrambled Frames in an array of 192 rows of 172 bytes each (see figure 13). To each of the 172 columns, 16 bytes of Parity of Outer Code are added, then, to each of the resulting 208 rows, 10 byte of Parity of Inner Code are added. Thus a complete ECC Block comprises 208 rows of 182 bytes each. The bytes of this array are identified as $B_{i,j}$ as follows, where i is the row number and j the column number.

$B_{i,j}$ for i = 0 to 191 and j = 0 to 171 are bytes from the Scrambled Frames.

$B_{i,j}$ for i = 192 to 207 and j = 0 to 171 are bytes of the Parity of Outer Code.

$B_{i,j}$ for i = 0 to 207 and j = 172 to 181 are bytes of the Parity of Inner Code.

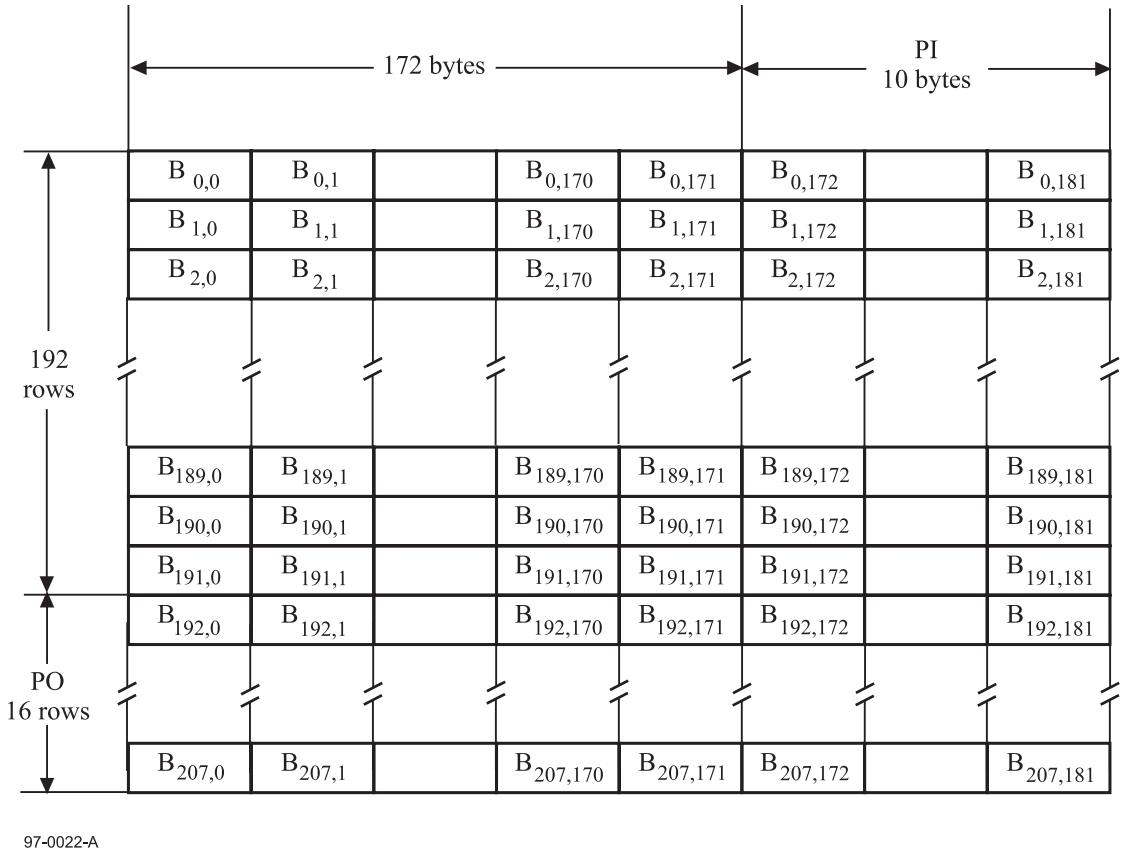

Figure 13 - ECC Block configuration

© ISO/IEC 2004 – All rights reserved
Copyright International Organization for Standardization
Reproduced by IHS under license with ISO
No reproduction or networking permitted without license from IHS
Not for Resale

The PO and PI bytes shall be obtained as follows.

In each of columns j = 0 to 171, the 16 PO bytes are defined by the remainder polynomial $R_j(x)$ to form the outer code RS (208,192,17).

$$R_j(x) = \sum_{i=192}^{207} B_{i,j}\, x^{207-i} \quad = \quad I_j(x)\, x^{16} \mod G_{PO}(x)$$

where:

$$I_j(x) = \sum_{i=0}^{191} B_{i,j}\, x^{191-i}$$

$$G_{PO}(x) = \prod_{k=0}^{15} (x + \alpha^k)$$

In each of rows i = 0 to 207, the 10 PI bytes are defined by the remainder polynomial $R_i(x)$ to form the inner code RS (182,172,11).

$$R_i(x) = \sum_{j=172}^{181} B_{i,j}\, x^{181-j} \quad = I_i(x)\, x^{10} \mod G_{PI}(x)$$

where:

$$I_i(x) = \sum_{j=0}^{171} B_{i,j}\, x^{171-j}$$

$$G_{PI}(x) = \prod_{k=0}^{9} (x + \alpha^k)$$

α is the primitive root of the primitive polynomial $P(x) = x^8 + x^4 + x^3 + x^2 + 1$.

13.4 Recording Frames

Sixteen Recording Frames shall be obtained by interleaving one of the 16 PO rows at a time after every 12 rows of an ECC Block (figure 13). This is achieved by re-locating the bytes $B_{i,j}$ of the ECC Block as $B_{m,n}$ for

$m = i + int[i / 12]$ and $n = j$ for $i \leq 191$
$m = 13\ (i - 191) - 1$ and $n = j$ for $i \geq 192$

where *int*[x] represents the largest integer not greater than x.

Thus the 37 856 bytes of an ECC Block are re-arranged into 16 Recording Frames of 2 366 bytes. Each Recording Frame consists of an array of 13 rows of 182 bytes (see figure 14).

© ISO/IEC 2004 All rights reserved

Copyright International Organization for Standardization
Reproduced by IHS under license with ISO
No reproduction or networking permitted without license from IHS
Not for Resale

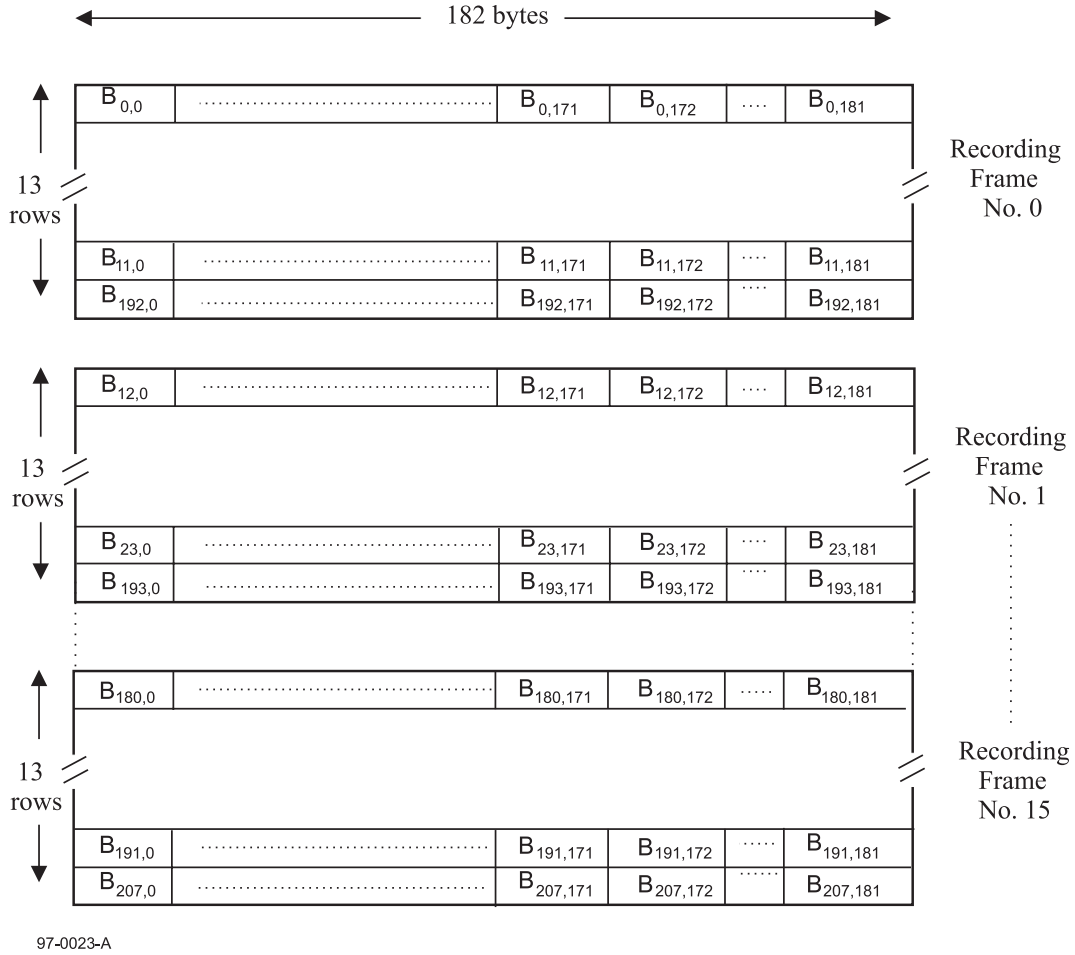

Figure 14 - Recording Frames obtained from an ECC Block

13.5 Recording code and NRZI conversion

The 8-bit bytes of each Recording Frame shall be transformed into 16-bit Code Words with the run length limitation that between 2 ONEs there shall be at least 2 ZEROs and at most 10 ZEROs (RLL 2,10). Annex G specifies the conversion tables to be applied. The Main Conversion table and the Substitution table specify a 16-bit Code Word for each 8-bit bytes with one of 4 States. For each 8-bit byte, the tables indicate the corresponding Code Word, as well as the State for the next 8-bit byte to be encoded.

The 16-bit Code Words shall be NRZI-converted into Channel bits before recording on the disk. (figure 15).

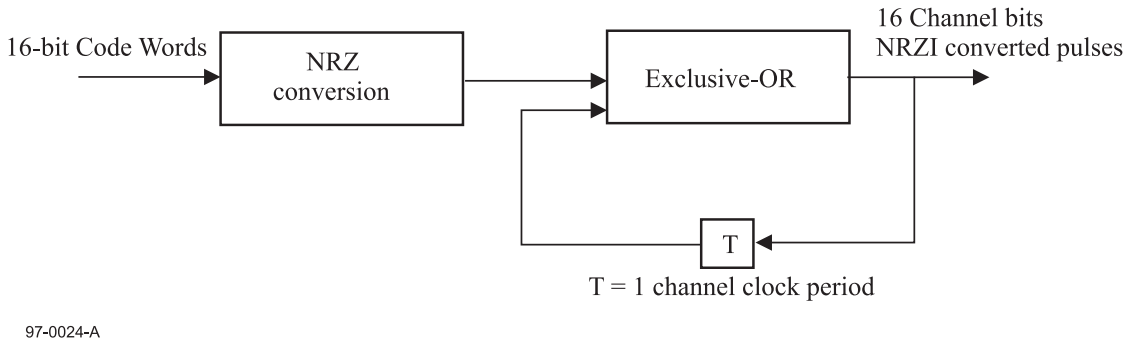

Figure 15 - NRZI conversion

© ISO/IEC 2004 – All rights reserved
Copyright International Organization for Standardization
Reproduced by IHS under license with ISO
No reproduction or networking permitted without license from IHS
Not for Resale

13.6 Recorded Data Field

The structure of a Recorded Data Field is shown in figure 16. It shall consist of 13 rows, each comprising two Sync Frames. A Sync Frame shall consist of a SYNC Code from table 2 and 1 456 Channel bits representing the first, respectively the second 91 8-bit bytes of a row of a Recording Frame. The first row of the Recording Frame is represented by the first row of the Recorded Data Field, the second by the second, and so on.

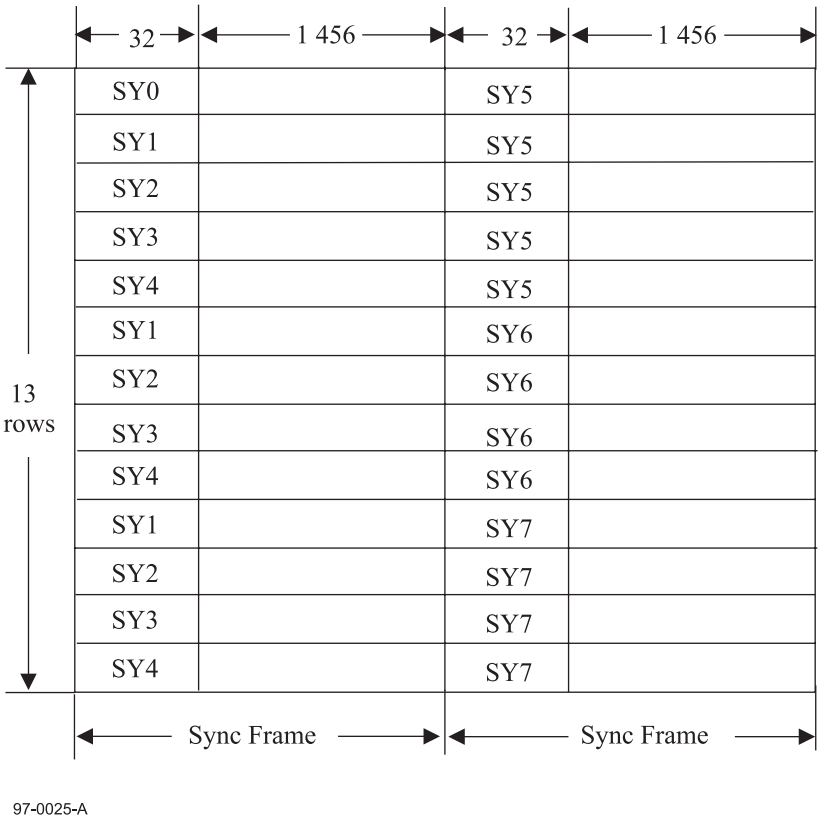

Figure 16 - Recorded Data Field

Recording shall start with the first Sync Frame of the first row, followed by the second Sync Frame of that row, and so on row-by-row.

For the selection of the Primary and Secondary SYNC Codes, see 13.7.

Table 2 - SYNC Codes

State 1 and State 2					
	Primary SYNC codes			Secondary SYNC codes	
	(msb)	(lsb)		(msb)	(lsb)
SY0 =	0001001001000100	0000000000010001	/	0001001000000100	0000000000010001
SY1 =	0000010000000100	0000000000010001	/	0000010001000100	0000000000010001
SY2 =	0001000000000100	0000000000010001	/	0001000001000100	0000000000010001
SY3 =	0000100000000100	0000000000010001	/	0000100001000100	0000000000010001
SY4 =	0010000000000100	0000000000010001	/	0010000001000100	0000000000010001
SY5 =	0010001001000100	0000000000010001	/	0010001000000100	0000000000010001
SY6 =	0010010010000100	0000000000010001	/	0010000010000100	0000000000010001
SY7 =	0010010001000100	0000000000010001	/	0010010000000100	0000000000010001

© ISO/IEC 2004 All rights reserved

Copyright International Organization for Standardization
Reproduced by IHS under license with ISO
No reproduction or networking permitted without license from IHS
Not for Resale

State 3 and State 4

	Primary SYNC codes (msb) (lsb)		Secondary SYNC codes (msb) (lsb)
SY0 =	1001001000000100 0000000000010001	/	1001001001000100 0000000000010001
SY1 =	1000010001000100 0000000000010001	/	1000010000000100 0000000000010001
SY2 =	1001000001000100 0000000000010001	/	1001000000000100 0000000000010001
SY3 =	1000001001000100 0000000000010001	/	1000001000000100 0000000000010001
SY4 =	1000100001000100 0000000000010001	/	1000100000000100 0000000000010001
SY5 =	1000100100000100 0000000000010001	/	1000000100000100 0000000000010001
SY6 =	1001000010000100 0000000000010001	/	1000000001000100 0000000000010001
SY7 =	1000100010000100 0000000000010001	/	1000000010000100 0000000000010001

13.7 DC component suppress Control (DCC)

13.7.1 DCC for the data in the Rewritable Area

The DC component suppress Control (DCC) minimizes the absolute value of the accumulated DSV (Digital Sum Value, see 4.3).

The DCC algorithm controls the choice of SYNC codes and 16-Channel bit Code Words in each of following three cases so that DSV is minimized.

The choice shall be determined so that, for each 16-bit Code Word (or SYNC Code), the accumulated DSV is a minimum at the end of the 16-bit Code Word (or SYNC Code) to be selected.

a) Choice of the SYNC Codes between Primary or Secondary SYNC Codes.

b) For the 8-bit bytes in the range 0 to 87, the Substitution table offers an alternative 16-bit Code Word for all States.

c) For the 8-bit bytes in the range 88 to 255, when the prescribed State is 1 or 4, then the 16-bit Code Word can be chosen either from State 1 or from State 4, so as to ensure that the RLL requirement is met.

13.7.2 DCC for the data in the Embossed Area

The DC component suppress control (DCC) minimizes the absolute value of the accumulated DSV.

To ensure a reliable radial tracking and a reliable detection of the HF signals, the low frequency content of the stream of Channel bit patterns should be kept as low as possible. In order to achieve this, the Digital Sum Value shall be kept as low as possible. At the beginning of recording, the DSV shall be set to 0.

The different ways of diminishing the current value of the DSV are as follows.

a) Choice of SYNC Codes between Primary or Secondary SYNC Codes.

b) For the 8-bit bytes in the range 0 to 87, the Substitution table offers an alternative 16-bit Code Word for all States

c) For the 8-bit bytes in the range 88 to 255, when the prescribed State is 1 or 4, then the 16-bit Code Word can be chosen either from State 1 or from State 4, so as to ensure that the RLL requirement is met.

In order to use these possibilities, two data streams, Stream 1 and Stream 2, are generated for each Sync Frame. Stream 1 shall start with the Primary SYNC Code and Stream 2 with the Secondary SYNC Code of the same category of SYNC Codes. As both streams are modulated individually, they generate a different DSV because of the difference between the bit patterns of the Primary and Secondary SYNC Codes.

In the cases b) and c), there are two possibilities to represent a 8-bit byte. The DSV of each stream is computed up to the 8-bit byte preceding the 8-bit byte for which there is this choice. The stream with the lowest $|DSV|$ is selected and duplicated to the other stream. Then, one of the representations of the next 8-bit byte is entered into Stream 1 and the other into Stream 2. This operation is repeated each time case b) or c) occurs.

© ISO/IEC 2004 – All rights reserved
Copyright International Organization for Standardization
Reproduced by IHS under license with ISO
No reproduction or networking permitted without license from IHS
Not for Resale

Whilst case b) always occurs at the same pattern position in both streams, case c) may occur in one of the streams and not in the other because, for instance, the next State prescribed by the previous 8-bit byte can be 2 or 3 instead of 1 or 4. In that case the following 3-step procedure shall be applied.

1) Compare the |DSV|s of both streams.
2) If the |DSV| of the stream in which case c) occurs is smaller than that of the other stream, then the stream in which case c) has occurred is chosen and duplicated to the other stream. One of the representations of the next 8-bit byte is entered into this stream and the other into the other stream.
3) If the |DSV| of the stream in which case c) has occurred is larger than that of the other stream, then case c) is ignored and the 8-bit byte is represented according to the prescribed State.

In both cases b) and c), if the |DSV|s are equal, the decision to choose Stream 1 or Stream 2 is implementation-defined.

The procedure for case a) shall be as follows. At the end of a Sync Frame, whether or not case b) and or case c) have occurred, the DSV of the whole Sync Frame is computed and the stream with the lower |DSV| is selected. If this DSV is greater than + 63 or smaller than -64, then the SYNC Code at the beginning of the Sync Frame is changed from Primary to Secondary or vice versa. If this yields a smaller |DSV|, the change is permanent, if the |DSV| is not smaller, the original SYNC Code is retained.

During the DSV computation, the actual values of the DSV may vary between -1000 and +1000, thus it is recommended that the count range for the DSV be at least from -1 024 to +1 023.

13.7.3 PID and PED recording

PID and PED (see 15.4 and 15.5) shall be recorded in the same manner as specified for Data Fields in 13.5, or in a simplified manner using only the Main Conversion Table G.1.

In the first case, the value of the accumulated DSV shall be reset to 0 at the beginning of VFO 1 in the Header 1 field.

In both cases recording of PID 1, PID 2, PID 3 and PID 4 shall start with the State 1.

14 Track format

14.1 Track shape

Each track shall form a 360º turn of a continuous spiral.

In the Embossed Area (see 16.1) of the Information Zone, tracks shall be formed by a series of embossed pits.

In the Rewritable Area (see 16.1) of the Information Zone, tracks shall be formed by a land and groove pattern. Recording is made on the land between the grooves as well as in the grooves themselves.

A track in the grooves is called a groove track. A track on the land between the grooves is called a land track. The end of a groove track is followed by the beginning of a land track, and vice versa.

A sector in a groove track is called a groove sector, a sector in a land track is called a land sector.

All tracks are continuous in the Information Zone. However, the grooves shall be interrupted in the Header and Mirror fields of each sector (see 15.1.1). The grooves shall be wobbled in the radial direction in such way that they are given a sinusoidal wave form.

The detailed shape of the tracks is determined by the requirements of Section 4.

14.2 Track path

The track path shall be a continuous spiral from the inside (beginning of the Lead-in Zone) to the outside (end of the Lead-out Zone) of the disk.

© ISO/IEC 2004 All rights reserved

Copyright International Organization for Standardization
Reproduced by IHS under license with ISO
No reproduction or networking permitted without license from IHS
Not for Resale

14.3 Track pitch

The track pitch is the distance between the centrelines of adjacent tracks, measured in a radial direction. It shall be 0,615 µm ± 0,03 µm in the Rewritable area and 0,74 µm ± 0,03 µm in the Embossed area. The track pitch averaged over the Rewritable area shall be 0,615 µm ± 0,01 µm and the track pitch averaged over the Embossed area shall be 0,74 µm ± 0,01 µm. The tracks shall start in the Lead-in Zone at radius

$$22{,}6 \text{ mm.}^{+0{,}0 \text{ mm}}_{-0{,}2 \text{ mm}}$$

14.4 Track layout

Each track shall be divided into sectors.

The number of sectors per track in the Embossed Area of the Lead-in Zone shall be 18 (see table 3 and table 4). Each sector in the Embossed Area of the Lead-in Zone shall comprise 2 418 bytes where each byte is represented on the disk by 16 Channel bits. The sectors in the Embossed Area of the Lead-in Zone shall be equally spaced over a track. They shall have a size of 38 688 Channel bits.

The number of sectors per track in the Rewritable Area shall increase from Zone 0 to Zone 34 in case of 120 mm disk, or from Zone 0 to Zone 13 in case of 80 mm disk, when moving from the inner radius to the outer radius so as to keep the recording linear density practically constant in any Zone. Each sector shall comprise 2 697 bytes where each byte is represented on the disk by 16 Channel bits. The sectors in the Rewritable Area shall be equally spaced over a track. They shall have a size of 43 152 Channel bits.

14.5 Rotation speed

The nominal rotation speed is different in each Zone and is determined by the Zone number. These values are for reference only. The nominal rotation speed yielding a user data bit rate of 22,16 Mbit/s is obtained by using the formula:

Rotation speed (Hz) = 22 160 000 / (Number of sectors per track × 2048 × 8).

The disk shall rotate counter clockwise as viewed from the optical head.

The absolute rotation speed in the Embossed data zone shall be adjusted to that of Zone 0.

--`,,`-`-`,,`,,`,`,,`---

© ISO/IEC 2004 – All rights reserved
Copyright International Organization for Standardization
Reproduced by IHS under license with ISO
No reproduction or networking permitted without license from IHS
Not for Resale

Table 3 - Nominal rotation speed for 120 mm disk

Zone		Rotation speed (Hz)	Number of sectors per track	Period of a Channel bit (ns)	Period of a Byte (ns)	Period of a Sector (µs)
Lead-in Zone	Embossed Area	54,10	18	26,54	425	1 027
	Rewritable Area	54,10	25	17,13	274	739
Data Zone Rewritable Aera	Zone 0	54,10	25	17,13	274	739
	Zone 1	52,02	26	17,13	274	739
	Zone 2	50,09	27	17,13	274	739
	Zone 3	48,30	28	17,13	274	739
	Zone 4	46,64	29	17,13	274	739
	Zone 5	45,08	30	17,13	274	739
	Zone 6	43,63	31	17,13	274	739
	Zone 7	42,27	32	17,13	274	739
	Zone 8	40,99	33	17,13	274	739
	Zone 9	39,78	34	17,13	274	739
	Zone 10	38,64	35	17,13	274	739
	Zone 11	37,57	36	17,13	274	739
	Zone 12	36,56	37	17,13	274	739
	Zone 13	35,59	38	17,13	274	739
	Zone 14	34,68	39	17,13	274	739
	Zone 15	33,81	40	17,13	274	739
	Zone 16	32,99	41	17,13	274	739
	Zone 17	32,20	42	17,13	274	739
	Zone 18	31,45	43	17,13	274	739
	Zone 19	30,74	44	17,13	274	739
	Zone 20	30,06	45	17,13	274	739
	Zone 21	29,40	46	17,13	274	739
	Zone 22	28,78	47	17,13	274	739
	Zone 23	28,18	48	17,13	274	739
	Zone 24	27,60	49	17,13	274	739
	Zone 25	27,05	50	17,13	274	739
	Zone 26	26,52	51	17,13	274	739
	Zone 27	26,01	52	17,13	274	739
	Zone 28	25,52	53	17,13	274	739
	Zone 29	25,05	54	17,13	274	739
	Zone 30	24,59	55	17,13	274	739
	Zone 31	24,15	56	17,13	274	739
	Zone 32	23,73	57	17,13	274	739
	Zone 33	23,32	58	17,13	274	739
	Zone 34	22,92	59	17,13	274	739
Lead-out Zone Rewritable Area		22,92	59	17,13	274	739

--`,`-`-`,,`,,`,`,,`---
© ISO/IEC 2004 All rights reserved
Copyright International Organization for Standardization
Reproduced by IHS under license with ISO
No reproduction or networking permitted without license from IHS
Not for Resale

Table 4 - Nominal rotation speed for 80 mm disk

Zone		Rotation speed (Hz)	Number of sectors per track	Period of a Channel bit (ns)	Period of a Byte (ns)	Period of a Sector (µs)
Lead-in Zone	Embossed Area	54,10	18	26,54	425	1 027
	Rewritable Area	54,10	25	17,13	274	739
Data Zone Rewritable Aera	Zone 0	54,10	25	17,13	274	739
	Zone 1	52,02	26	17,13	274	739
	Zone 2	50,09	27	17,13	274	739
	Zone 3	48,30	28	17,13	274	739
	Zone 4	46,64	29	17,13	274	739
	Zone 5	45,08	30	17,13	274	739
	Zone 6	43,63	31	17,13	274	739
	Zone 7	42,27	32	17,13	274	739
	Zone 8	40,99	33	17,13	274	739
	Zone 9	39,78	34	17,13	274	739
	Zone 10	38,64	35	17,13	274	739
	Zone 11	37,57	36	17,13	274	739
	Zone 12	36,56	37	17,13	274	739
	Zone 13	35,59	38	17,13	274	739
Lead-out Zone Rewritable Area		35,59	38	17,13	274	739

14.6 Radial alignment

In the Lead-in Zone, the Data Zone and the Lead-out Zone, the sectors on adjacent tracks shall be radially aligned so that the angular distance between the first Channel bits of two sectors does not exceed 4 Channel bits, except for the sectors on the track along the boundary between Buffer Zone 2 and the Connection Zone (see 16.2.7), along the boundary between Guard Track Zone 1 and the Connection Zone, and along the 34 boundaries between the 35 Zones of the Data Zone in 120 mm disk, or along the 13 boundaries between the 14 Zones of the Data Zone in 80 mm disk.

In addition, the angular distance between the first Channel bits of any pair of non-adjacent tracks shall not exceed 256 Channel bits.

14.7 Sector number

Each sector shall be identified by a sector number.

Sector (030000) shall be the first sector of the Rewritable Area in the Lead-in Zone. It shall be located at a radius of

$$24{,}0 \text{ mm}^{+0{,}0 \text{ mm}}_{-0{,}2 \text{ mm}}.$$

The sector numbers of the following sectors shall be increased by 1 for each sector. Sector (30000) shall be the first sector in a groove track.

© ISO/IEC 2004 – All rights reserved
Copyright International Organization for Standardization
Reproduced by IHS under license with ISO
No reproduction or networking permitted without license from IHS
Not for Resale

15 Sector format

15.1 Sector layout

15.1.1 Sector layout in the Rewritable Area

A sector shall consist of 20 fields within a Header field, a Mirror field and 8 fields within a Recording field. The 4 PID fields, the 4 PED fields and the Data field contain data. Each byte of these fields shall be recorded as a 16-Channel bit pattern according to 13.5 and annex G. All other fields are defined in terms of Channel bits. The numbers below the identifier of each field in figure 17 indicate the number of 16-Channel bit patterns in each field. The Recording field may be either unrecorded or recorded with up to 2 048 user bytes. The Header field shall be embossed.

The nominal length of a sector shall be 43 152 Channel bits. The length of the Header field shall be 2 048 Channel bits and the length of the Mirror field shall be 32 Channel bits. The nominal length of the Recording field shall be 41 072 Channel bits. It shall consist of a Gap field, a Guard 1 field, a VFO 3 field, a PS field, a Data field, a PA 3 field, a Guard 2 field and a Buffer field.

The Header field shall consist of a Header 1 field, a Header 2 field, a Header 3 field and a Header 4 field.

The Header 1 field shall consist of a VFO 1, an Address Mark, a Physical ID 1, a PED 1 and a PA 1.

The Header 2 field shall consist of a VFO 2, an Address Mark, a Physical ID 2, a PED 2 and a PA 2.

The Header 3 field shall consist of a VFO 1, an Address Mark, a Physical ID 3, a PED 3 and a PA 1.

The Header 4 field shall consist of a VFO 2, an Address Mark, a Physical ID 4, a PED 4 and a PA 2.

The Header field shall consist of Complementary Allocated Pit Addresses. The Header 1 field and the Header 2 field shall be arranged on the boundary between the groove track and the outer adjacent land track. The Header 3 field and the Header 4 field shall be arranged on the boundary between the groove track and the inner adjacent land track.

A groove shall be 41 072 Channel bits in length from the beginning of the Gap field. The groove is wobbled, and one wobble cycle shall be 186 Channel bits in length. This wobbled groove shall be sinusoidal, and shall start with 0 degree of phase at the beginning of the Gap field in each sector. The first half cycle shall be wobbled in the outer radial direction. The groove shall end from 0 to 4 Channel bits before the following Header field.

The Mirror field shall be located between the Header 4 and the Gap field.

The layout of a sector in the Rewritable Area is shown in figure 17.

The layout of the Header field on a disk from the view of objective lens shall be as shown in figure 18.

		Recording field							
Header	Mirror	Gap	Guard 1	VFO 3	PS	Data	PA 3	Guard 2	Buffer
128	2	$10 + \frac{J}{16}$	20 + K	35	3	2 418	1	55 - K	$25 - \frac{J}{16}$

$0 \le J \le 15$ $0 \le K \le 7$

a) Sector layout

Header 1					Header 2					Header 3					Header 4				
VFO 1	AM	PID 1	PED 1	PA 1	VFO 2	AM	PID 2	PED 2	PA 2	VFO 1	AM	PID 3	PED 3	PA 1	VFO 2	AM	PID 4	PED 4	PA 2
36	3	4	2	1	8	3	4	2	1	36	3	4	2	1	8	3	4	2	1

b) Header field layout

Figure 17 - Sector and Header field layout in the Rewritable Area

© ISO/IEC 2004 All rights reserved
Copyright International Organization for Standardization
Reproduced by IHS under license with ISO
No reproduction or networking permitted without license from IHS
Not for Resale

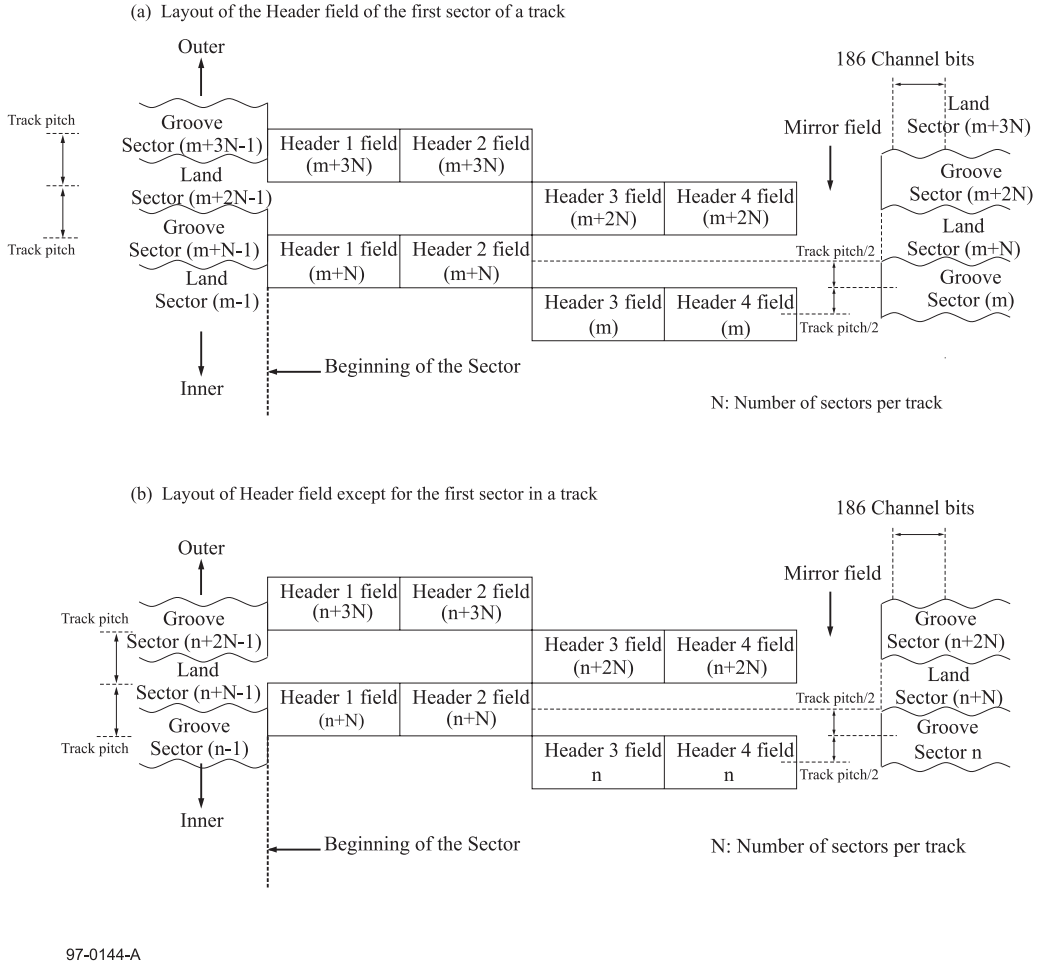

Figure 18 - Layout of the Header field in the Rewritable Area

15.1.2 Sector layout in the Embossed Area

A sector shall consist of the Data field formed by continuous embossed pits with a size of 38 688 Channel bits.

A sector on the track has no gap and is placed continuously from the beginning of the Embossed Area in the Lead-in Zone to the end of the Embossed Area in the Lead-in Zone.

15.2 VFO fields

There shall be two embossed VFO 1 fields and two embossed VFO 2 fields in the Header field and one VFO 3 field in the Recording field to give bit synchronization to the variable frequency oscillator of the phase-locked loop of the Read Channel. VFO 1 shall have a length of 576 Channel bits. VFO 2 shall have a length of 128 Channel bits. VFO 3 shall have a length of 560 Channel bits.

The continuous Channel bit pattern for the VFO fields shall be as shown in figure 19.

Copyright International Organization for Standardization
Reproduced by IHS under license with ISO
No reproduction or networking permitted without license from IHS
Not for Resale
© ISO/IEC 2004 – All rights reserved

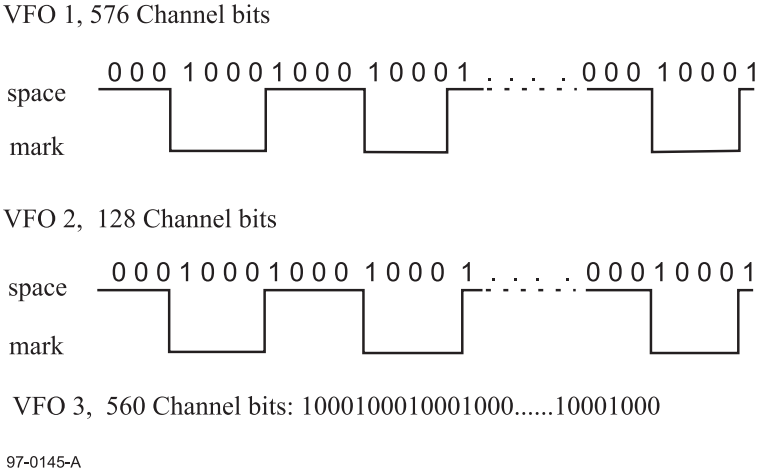

Figure 19 - VFO patterns

15.3 Address Mark (AM)

The Address Mark shall consist of an embossed pattern that does not occur in the 8-to-16 recording code. The field is intended to give the drive byte synchronization for the following PID field. It shall have a length of 48 Channel bits with the following pattern as shown in figure 20.

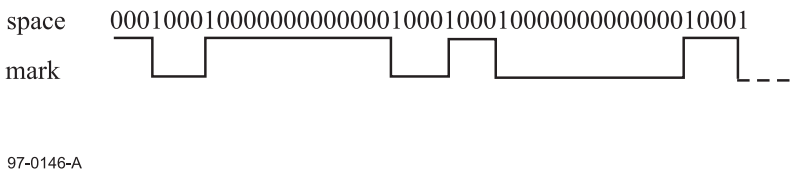

Figure 20 - Address Mark pattern

15.4 Physical ID (PID) fields

This field shall consist of four bytes the bits of which are numbered consecutively from b_0 (lsb) to b_{31} (msb), see figure 21.

b_{31} b_{30}	b_{29} b_{28}	b_{27} b_{26} b_{25}	b_{24}	b_{23} b_0
Reserved	Physical ID Number	Sector Type	Layer Number	Sector Number

Figure 21 - Physical ID field

The bits of the most significant byte, the Sector Information, shall be set as follows:

Bits b_{31} to b_{30} shall be set to ZERO ZERO.

Bits b_{29} to b_{28} shall be set to

ZERO ZERO, indicating PID 1,
ZERO ONE, indicating PID 2,

ONE ZERO, indicating PID 3,
ONE ONE, indicating PID 4.

© ISO/IEC 2004 All rights reserved

Copyright International Organization for Standardization
Reproduced by IHS under license with ISO
No reproduction or networking permitted without license from IHS
Not for Resale

Bit b_{27} to b_{25} shall be set to

100	in the first rewritable sector in a track,
101	in the last rewritable sector in a track,
110	in the last but one rewritable sector in a track,
111	in other rewritable sectors in a track.

Bit b_{24} shall be set to ZERO, indicating Layer 0.

The least significant three bytes, bits b_0 to b_{23}, shall specify the sector number in binary notation.

In the Rewritable Area, the PID 1 and the PID 2 fields both specify the sector number of the following land sector, the PID 3 and the PID 4 fields both specify the sector number of the following groove sector.

15.5 PID Error Detection code (PED) fields

Each PID field and the following PED field constitute a matrix the bytes of which are identified by C_j for j = 0 to 5. The bytes of the PED are C_4 and C_5.

$$PED(x) = \sum_{j=4}^{5} C_j \; x^{5-j} = I(x)\, x^2 \mod G_E(x)$$

where:

$$I(x) = \sum_{j=0}^{3} C_j \; x^{3-j}$$

$$G_E(x) = \prod_{k=0}^{1} (x + \alpha^k)$$

α is the primitive root of the primitive polynomial $P(x) = x^8 + x^4 + x^3 + x^2 + 1$.

15.6 Postamble 1 and Postamble 2 (PA 1, PA 2) fields

The Postamble 1 and Postamble 2 fields shall have a length of 16 Channel bits. The PA 1 field and PA 2 field allow for the closure of the last byte of the preceding PED, figures 22 to 25.

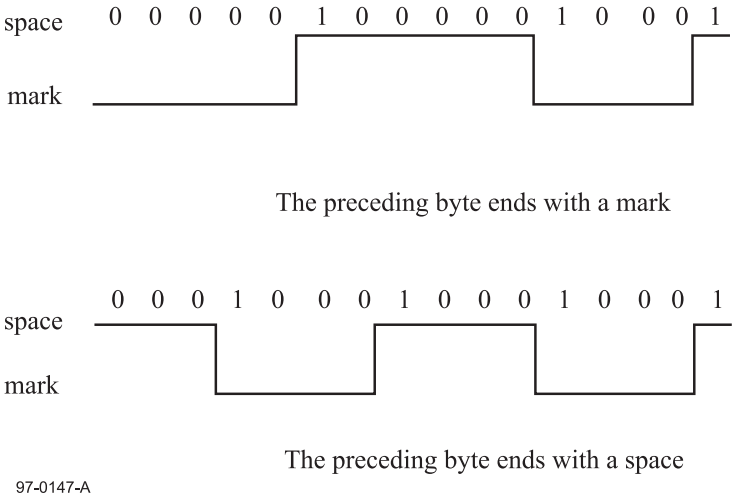

Figure 22 - PA 1 patterns in State 1 and State 2

© ISO/IEC 2004 – All rights reserved
Copyright International Organization for Standardization
Reproduced by IHS under license with ISO
No reproduction or networking permitted without license from IHS
Not for Resale

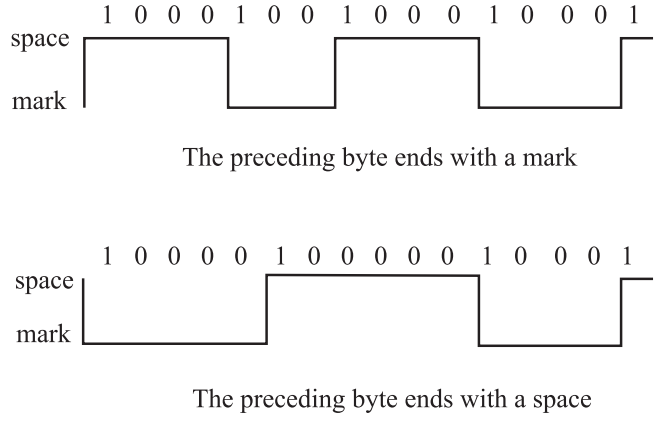

Figure 23 - PA 1 patterns in State 3 and State 4

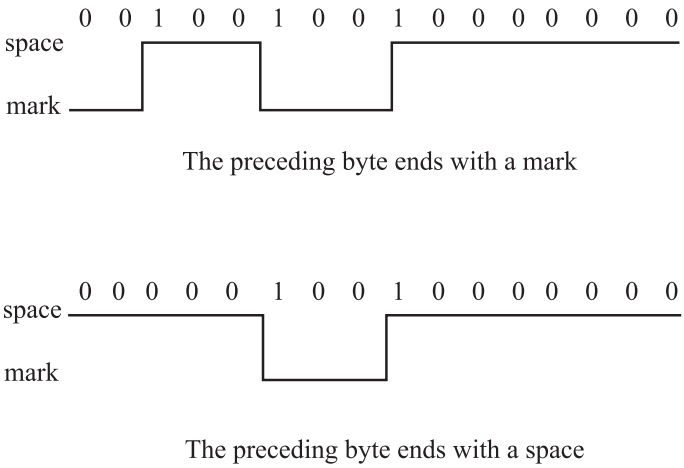

Figure 24 - PA 2 patterns in State 1 and State 2

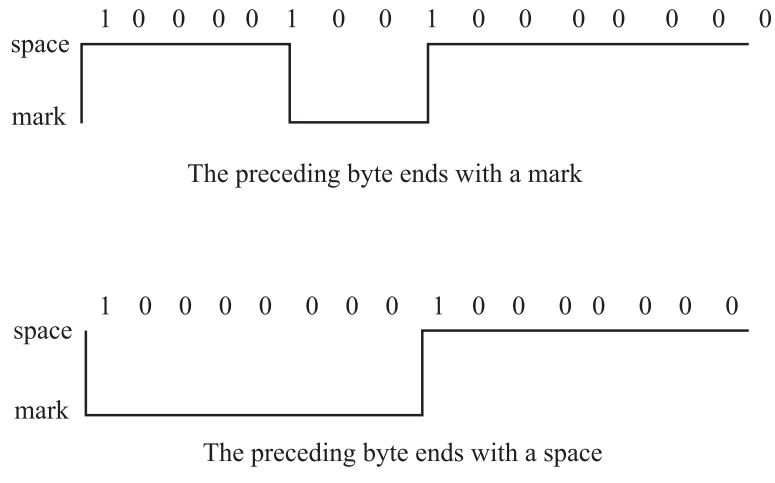

Figure 25 - PA 2 patterns in State 3 and State 4

© ISO/IEC 2004 All rights reserved
Copyright International Organization for Standardization
Reproduced by IHS under license with ISO
No reproduction or networking permitted without license from IHS
Not for Resale

15.7 Mirror field

This field shall have a nominal length of 32 Channel bits. This field shall have neither grooves nor embossed marks. There shall be no writing in this field.

15.8 Gap field

The Gap field shall have a nominal length of (160 + J) Channel bits, where J shall be varied randomly from 0 to 15. The tolerance on the resulting nominal length shall be ± 20 Channel bits. The variation of the length of the Gap field shall be compensated by the length of the Buffer field. See annex K.

Its contents are not specified and shall be ignored on interchange, but shall not be embossed. It is the first field of the Recording field, and gives a drive time for processing after it has finished reading the Header field and before it has to write the Guard 1 field or read the VFO 3 field.

15.9 Guard 1 field

The Guard 1 field shall have a nominal length of (20 + K) bytes, where K shall be varied randomly from 0 to 7 bytes to shift the position of the marks formed in the fields following from the VFO 3 field to the Guard 2 field of the Recording field. See annex K.

The first 20 bytes of the Guard 1 field protect the beginning of the VFO 3 field from signal degradation after overwriting many times. Their contents shall be ignored on reading.

The Guard 1 field shall contain (20 + K) times the 16 Channel bit pattern

1000 1000 1000 1000

15.10 Pre-Synchronous code (PS) field

The PS field is intended to allow the drive to achieve byte synchronization for the following Data field.

It shall contain the 48-Channel bit pattern

0000 0100 0100 1000 0010 0001 0010 0000 1000 0010 0001 0000

15.11 Data field

This field shall be recorded with the format specified in clause 13.

15.12 Postamble 3 (PA 3) field

The PA 3 field shall be equal in length to 16 Channel bits. The PA 3 field allows closure of the last byte of the preceding Data field as required by the 8-to-16 recording code.

For State 1 and State 2, it shall be set to

0001 0010 0100 0100 / 0001 0010 0000 0100

State 3 and State 4, it shall be set to

1001 0010 0000 0100 / 1001 0010 0100 0100

In demodulating, PA 3 can be used as the first 16 Channel bits of SY0 in the next Data field.

15.13 Guard 2 field

The Guard 2 field shall have a nominal length of (55-K) bytes, where K shall be varied from 0 to 7 so that the total length of Guard 1 field and Guard 2 field shall be equal to 75 bytes. The last 20 bytes of the Guard 2 field protect the end of the Data field from degradation after overwriting many times. The rest of the Guard 2 field takes up the variation of actual length of the written data. Its contents shall be ignored in interchange.

The Guard 2 field shall be set to (55-K) times the 16-Channel bit pattern

1000 1000 1000 1000

© ISO/IEC 2004 – All rights reserved
Copyright International Organization for Standardization
Reproduced by IHS under license with ISO
No reproduction or networking permitted without license from IHS
Not for Resale

The fields of the Guard 1 field, the VFO_3 field, the PS field, the Data field, the PA 3 field and the Guard 2 field shall be written without a gap and their total length shall be 2 532 bytes. See annex K.

15.14 Recording polarity randomization

In the Rewritable Area, the polarity of NRZI-converted pulses shall be alternated randomly at each recording in order to homogenize the average probability of location of the marks and spaces on the recording layer after a number of overwriting cycles. The alternation shall be applied to all pulses in the Guard 1 field, the VFO_3 field, the PS field, the Data field, the PA 3 field and the Guard 2 field, at the same time.

The random selection shall be carried out in such a way that the polarity, length of the Gap field and length of the Guard 2 field shall have no relation with each other. See annex J.

The polarity shall be ignored on interchange.

15.15 Buffer field

The Buffer field shall have a nominal length of (400 - J) Channel bits, where the J shall equal the number J selected in 15.8. The tolerance on the resulting nominal value shall be ± 272 Channel bits. The content of this field is not specified by this International Standard, and shall be ignored in interchange.

The Buffer field is needed for the actual length of the written data, as determined by the runout of the track and the speed variations of the disk during writing of the data.

16 Format of the Information Zone

16.1 Division of the Information Zone

The Information Zone shall comprise three parts: the Lead-in Zone, the Data Zone and the Lead-out Zone. It shall contain all information on the disk relevant for data interchange. This information shall consist of tracking provisions, Header fields, data and user-recorded data. In the first five zones of the Lead-in Zone (see 16.2) this information is embossed. These five zones constitute the Embossed Area. The last six zones of the Lead-in Zone, the Data Zone and the Lead-out Zone constitute the Rewritable Area in which the information is recorded in rewritable mode.

The Information Zone shall be sub-divided as follows.

- **Lead-in Zone**
  - Initial Zone
  - Reference Code Zone
  - Buffer Zone 1
  - Control Data Zone
  - Buffer Zone 2
  - Connection Zone
  - Guard Track Zone 1
  - Disk Test Zones
  - Drive Test Zone
  - Guard Track Zone 2
  - Defect Management Areas (DMA 1 and DMA 2)
  - Disk Identification (ID) Zone
- **Data Zone**
- **Lead-out Zone**
  - Defect Management Areas (DMA 3 and DMA 4)
  - Reserved Zone
  - Guard Track Zone 1
  - Drive Test Zone
  - Disk Test Zone
  - Guard Track Zone 2

© ISO/IEC 2004 All rights reserved

Copyright International Organization for Standardization
Reproduced by IHS under license with ISO
No reproduction or networking permitted without license from IHS
Not for Resale

The division of the Information Zone for 120 mm disk shall be as shown in table 5, and for 80 mm disk shall be as shown in table 6. The radii of a Zone in the table are the nominal values of the radius of the centre of the first track and of the radius of the centre of the last track of the Zone. The tolerance on these nominal values shall be +0,0 mm and -0,2 mm.

© ISO/IEC 2004 – All rights reserved
Copyright International Organization for Standardization
Reproduced by IHS under license with ISO
No reproduction or networking permitted without license from IHS
Not for Resale

Table 5 - Layout of the Information Zone for 120 mm disk

Zone			Nominal radius (mm)	Number of sectors per track	Number of tracks	Sector numbers
Lead- in Zone	Embossed Area	Initial Zone	22,6 to 24,0	18	1 896 min.	to (02EFFF)
		Reference Code Zone				(02F000) to (02F00F)
		Buffer Zone 1				(02F010) to (02F1FF)
		Control Data Zone				(02F200) to (02FDFF)
		Buffer Zone 2				(02FE00) to (02FFFF)
		Connection Zone				
	Rewritable Area	Guard Track Zone 1	24,0 to 24,1	25	1 568	(030000) to (0301FF)
		Disk Test Zone				(030200) to (0305FF)
		Drive Test Zone				(030600) to (030CFF)
		Guard Track Zone 2				(030D00) to (030EFF)
		Disk ID Zone				(030F00) to (030F7F)
		DMA 1 & DMA 2				(030F80) to (030FFF)
Data Zone Rewritable Area		Zone 0	24,1 to 25,0	25		(031000) to (03991F)
		Zone 1	25,0 to 25,9	26	1 568	(039920) to (04385F)
		Zone 2	25,9 to 26,9	27	1 568	(043860) to (04DDBF)
		Zone 3	26,9 to 27,9	28	1 568	(04DDC0) to (05893F)
		Zone 4	27,9 to 28,8	29	1 568	(058940) to (063ADF)
		Zone 5	28,8 to 29,8	30	1 568	(063AE0) to (06F29F)
		Zone 6	29,8 to 30,8	31	1 568	(06F2A0) to (07B07F)
		Zone 7	30,8 to 31,7	32	1 568	(07B080) to (08747F)
		Zone 8	31,7 to 32,7	33	1 568	(087480) to (093E9F)
		Zone 9	32,7 to 33,6	34	1 568	(093EA0) to (0A0EDF)
		Zone 10	33,6 to 34,6	35	1 568	(0A0EE0) to (0AE53F)
		Zone 11	34,6 to 35,6	36	1 568	(0AE540) to (0BC1BF)
		Zone 12	35,6 to 36,5	37	1 568	(0BC1C0) to (0CA45F)
		Zone 13	36,5 to 37,5	38	1 568	(0CA460) to (0D8D1F)
		Zone 14	37,5 to 38,8	39	1 568	(0D8D20) to (0E7BFF)
		Zone 15	38,5 to 39,4	40	1 568	(0E7C00) to (0F70FF)
		Zone 16	39,4 to 40,4	41	1 568	(0F7100) to (106C1F)
		Zone 17	40,4 to 41,4	42	1 568	(106C20) to (116D5F)
		Zone 18	41,4 to 42,3	43	1 568	(116D60) to (1274BF)
		Zone 19	42,3 to 43,3	44	1 568	(1274C0) to (13823F)
		Zone 20	43,3 to 44,3	45	1 568	(138240) to (1495DF)
		Zone 21	44,3 to 45,2	46	1 568	(1495E0) to (15AF9F)
		Zone 22	45,2 to 46,2	47	1 568	(15AFA0) to (16CF7F)
		Zone 23	46,2 to 47,1	48	1 568	(16CF80) to (17F57F)
		Zone 24	47,1 to 48,1	49	1 568	(17F580) to (19219F)
		Zone 25	48,1 to 49,1	50	1 568	(1921A0) to (1A53DF)
		Zone 26	49,1to 50,0	51	1 568	(1A53E0) to (1B8C3F)
		Zone 27	50,0 to 51,0	52	1 568	(1B8C40) to (1CCABF)
		Zone 28	51,0 to 52,0	53	1 568	(1CCAC0) to (1E0F5F)
		Zone 29	52,0 to 52,9	54	1 568	(1E0F60) to (1F5A1F)
		Zone 30	52,9 to 53,9	55	1 568	(1F5A20) to (20AAFF)
		Zone 31	53,9 to 54,9	56	1 568	(20AB00) to (2201FF)
		Zone 32	54,9 to 55,8	57	1 568	(220200) to (235F1F)
		Zone 33	55,8 to 56,8	58	1 568	(235F20) to (24C25F)
		Zone 34	56,8 to 57,9	59	1 792	(24C260) to (265F5F)
Lead-out Zone Rewritable Area		DMA 3 and DMA 4	57,9 to 58,5	59	982,5	(265F60) to (26601F)
		Reserved Zone				(266020) to (2660DF)
		Guard Track Zone 1				(2660E0) to (2662DF)
		Drive Test Zone				(2662E0) to (2669DF)
		Disk Test Zone				(2669E0) to (2670DF)
		Guard Track Zone 2				(2670E0) to (2741CF)

© ISO/IEC 2004 All rights reserved

Copyright International Organization for Standardization
Reproduced by IHS under license with ISO
No reproduction or networking permitted without license from IHS
Not for Resale

Table 6 - Layout of the Information Zone for 80 mm disk

Zone			Nominal radius (mm)	Number of sectors per track	Number of tracks	Sector numbers
Lead- in Zone	Embossed Area	Initial Zone	22,6 to 24,0	18	1 896 min.	to (02EFFF)
		Reference Code Zone				(02F000) to (02F00F)
		Buffer Zone 1				(02F010) to (02F1FF)
		Control Data Zone				(02F200) to (02FDFF)
		Buffer Zone 2				(02FE00) to (02FFFF)
		Connection Zone				
	Rewritable Area	Guard Track Zone 1	24,0 to 24,1	25	1 568	(030000) to (0301FF)
		Disk Test Zone				(030200) to (0305FF)
		Drive Test Zone				(030600) to (030CFF)
		Guard Track Zone 2				(030D00) to (030EFF)
		Disk ID Zone				(030F00) to (030F7F)
		DMA 1 & DMA 2				(030F80) to (030FFF)
Data Zone Rewritable Area		Zone 0	24,1 to 25,0	25		(031000) to (03991F)
		Zone 1	25,0 to 25,9	26	1 568	(039920) to (04385F)
		Zone 2	25,9 to 26,9	27	1 568	(043860) to (04DDBF)
		Zone 3	26,9 to 27,9	28	1 568	(04DDC0) to (05893F)
		Zone 4	27,9 to 28,8	29	1 568	(058940) to (063ADF)
		Zone 5	28,8 to 29,8	30	1 568	(063AE0) to (06F29F)
		Zone 6	29,8 to 30,8	31	1 568	(06F2A0) to (07B07F)
		Zone 7	30,8 to 31,7	32	1 568	(07B080) to (08747F)
		Zone 8	31,7 to 32,7	33	1 568	(087480) to (093E9F)
		Zone 9	32,7 to 33,6	34	1 568	(093EA0) to (0A0EDF)
		Zone 10	33,6 to 34,6	35	1 568	(0A0EE0) to (0AE53F)
		Zone 11	34,6 to 35,6	36	1 568	(0AE540) to (0BC1BF)
		Zone 12	35,6 to 36,5	37	1 568	(0BC1C0) to (0CA45F)
		Zone 13	36,5 to 38,1	38	2 464	(0CA460) to (0E121F)
Lead-out Zone Rewritable Area		DMA 3 and DMA 4	38,1 to 38,5	38	730,2	(0E1220) to (0E12DF)
		Reserved Zone				(0E12E0) to (0E139F)
		Guard Track Zone 1				(0E13A0) to (0E159F)
		Drive Test Zone				(0E15A0) to (0E1A1F)
		Disk Test Zone				(0E1A20) to (0E1D9F)
		Guard Track Zone 2				(0E1DA0) to (0E7E7F)

16.2 Lead-in Zone

16.2.1 Structure of Lead-in Zone

The structure of the Lead-in Zone is shown in figure 26. The sector numbers indicate the first sector of each zone, as well as the last one of the Initial Zone and of Buffer Zone 2. The first five zones are in the Embossed Area, the Connection Zone constitutes the Mirror Zone, the last seven zones and the Data Zone are in the Rewritable Area.

© ISO/IEC 2004 – All rights reserved
Copyright International Organization for Standardization
Reproduced by IHS under license with ISO
No reproduction or networking permitted without license from IHS
Not for Resale

	Initial Zone	
Sector No.192 511		Sector No. (02EFFF)
Sector No.192 512	Reference Code Zone 16 Sectors	Sector No. (02F000)
Sector No.192 528	Buffer Zone 1 1 496 Sectors	Sector No. (02F010)
Sector No.193 024	Control Data Zone 3 072 Sectors	Sector No. (02F200)
Sector No.196 096 Sector No.196 607	Buffer Zone 2 512 Sectors	Sector No. (02FE00) Sector No. (02FFFF)
	Connection Zone	
Sector No.196 608	Guard Track Zone 1 512 Sectors	Sector No. (030000)
Sector No.197 120	Disk Test Zone 1 024 Sectors	Sector No. (030200)
Sector No.198 144	Drive Test Zone 1 792 Sectors	Sector No. (030600)
Sector No.199 936	Guard Track Zone 2 512 Sectors	Sector No. (030D00)
Sector No.200 448	Disk Identification Zone 128 Sectors	Sector No. (030F00)
Sector No.200 576	DMA1 & DMA2 128 Sectors	Sector No. (030F80)
Sector No.200 704	Data Zone	Sector No. (031000)

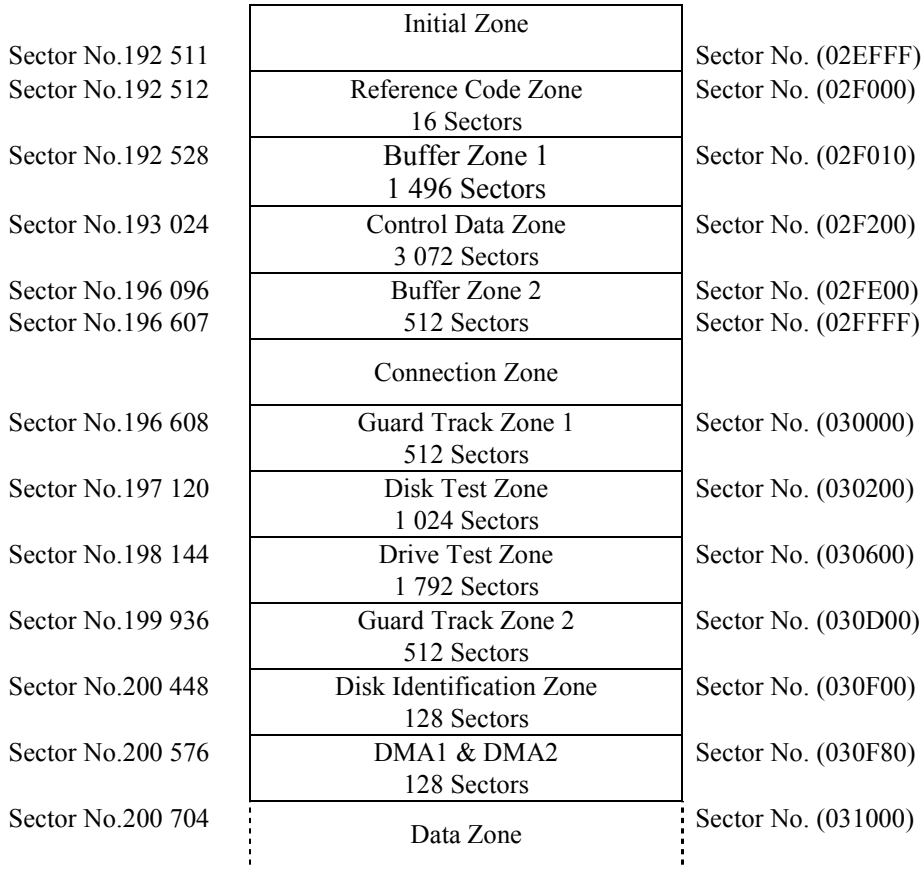

Figure 26 - Structure of the Lead-in Zone

16.2.2 Initial Zone

This zone shall comprise at least 30 032 sectors. The Main Data of the Data Frames recorded in the Initial Zone shall be set to (00).

16.2.3 Reference Code Zone

The Reference Code Zone shall consist of the 16 Recorded Data Fields from an ECC Block which generate a specific Channel bit pattern on the disk. This shall be achieved by setting to (AC) all 2 048 Main Data bytes of the Data Frame. Moreover, no scrambling shall be applied to this Data Frame, except to the first 160 Main Data bytes of the Data Frame of the ECC Block.

16.2.4 Buffer Zone 1

This zone shall consist of 496 Recorded Data Fields from 31 ECC Blocks. The Main Data of the Data Frames eventually recorded as Recorded Data Fields in this zone shall be set to (00).

16.2.5 Buffer Zone 2

This zone shall consist of 512 Recorded Data Fields from 32 ECC Blocks. The Main Data of the Data Frames recorded as Recorded Data Fields in this zone shall be set to (00).

16.2.6 Control Data Zone

The Data fields in the Control Data Zone shall contain embossed control data for the drive.

The Control Data Zone comprises the 192 ECC Blocks starting from the sector number 193 024 (02F200). The content of 16 sectors in each block shown in figure 27 is repeated 192 times.

© ISO/IEC 2004 All rights reserved

Copyright International Organization for Standardization
Reproduced by IHS under license with ISO
No reproduction or networking permitted without license from IHS
Not for Resale

In each ECC Block, the first sector shall contain Physical format information and the second sector in each block shall contain Disk manufacturing information.

The contents of the other sectors in each block are reserved. All the bytes in the reserved block shall be set to (00).

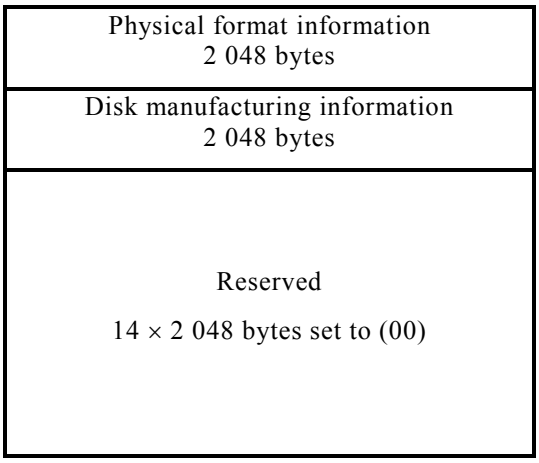

Figure 27 - Structure of an ECC Block in the Control Data Zone

16.2.6.1 Physical format information

This information shall comprise the 2 048 bytes specified by table 7.

Table 7 - Physical format information (continued)

Byte position	Contents	Number of bytes
0	Disk Category and Version Number	1
1	Disk size and maximum transfer rate	1
2	Disk structure	1
3	Recording density	1
4 to 15	Data Zone allocation	12
16	BCA Descriptor	1
17 to 31	Reserved	15
32	Disk Type identification	1
33 to 499	Reserved	467
500	Velocity	1
501	Read power	1
502	Mode flag of adaptive write pulse control	1
503	Peak power for land tracks	1
504	Bias Power 1 for land tracks	1
505	Bias Power 2 for land tracks	1
506	Bias Power 3 for land tracks	1
507	Peak power for groove tracks	1
508	Bias Power 1 for groove tracks	1
509	Bias Power 2 for groove tracks	1
510	Bias Power 3 for groove tracks	1
511	First pulse end time	1
512	First pulse duration	1
513	Multiple pulse duration	1
514	Last pulse start time	1
515	Last pulse duration	1
516	Bias power2 duration	1
517	First pulse start time, Mark 3T, Leading Space 3T	1

© ISO/IEC 2004 – All rights reserved
Copyright International Organization for Standardization
Reproduced by IHS under license with ISO
No reproduction or networking permitted without license from IHS
Not for Resale

518	First pulse start time, Mark 4T, Leading Space 3T	1
519	First pulse start time, Mark 5T, Leading Space 3T	1
520	First pulse start time, Mark >5T, Leading Space 3T	1
521	First pulse start time, Mark 3T, Leading Space 4T	1
522	First pulse start time, Mark 4T, Leading Space 4T	1
523	First pulse start time, Mark 5T, Leading Space 4T	1
524	First pulse start time, Mark >5T, Leading Space 4T	1
525	First pulse start time, Mark 3T, Leading Space 5T	1
526	First pulse start time, Mark 4T, Leading Space 5T	1
527	First pulse start time, Mark 5T, Leading Space 5T	1
528	First pulse start time, Mark >5T, Leading Space 5T	1
529	First pulse start time, Mark 3T, Leading Space >5T	1
530	First pulse start time, Mark 4T, Leading Space >5T	1
531	First pulse start time, Mark 5T, Leading Space >5T	1
532	First pulse start time, Mark >5T, Leading Space >5T	1
533	Last pulse end time, Mark 3T, Trailing Space 3T	1
534	Last pulse end time, Mark 4T, Trailing Space 3T	1
535	Last pulse end time, Mark 5T, Trailing Space 3T	1
536	Last pulse end time, Mark >5T, Trailing Space 3T	1
537	Last pulse end time, Mark 3T, Trailing Space 4T	1
538	Last pulse end time, Mark 4T, Trailing Space 4T	1
539	Last pulse end time, Mark 5T, Trailing Space 4T	1
540	Last pulse end time, Mark >5T, Trailing Space 4T	1
541	Last pulse end time, Mark 3T, Trailing Space 5T	1
542	Last pulse end time, Mark 4T, Trailing Space 5T	1
543	Last pulse end time, Mark 5T, Trailing Space 5T	1
544	Last pulse end time, Mark >5T, Trailing Space 5T	1
545	Last pulse end time, Mark 3T, Trailing Space >5T	1
546	Last pulse end time, Mark 4T, Trailing Space >5T	1
547	Last pulse end time, Mark 5T, Trailing Space >5T	1
548	Last pulse end time, Mark >5T, Trailing Space >5T	1
549 to 596	Disk manufacturer's name	48
597 to 612	Disk manufacturer's supplementary information	16
613 to 623	Write power control parameters	11
624 to 2 047	Reserved	1 424

Byte 0 - Disk Category and Version Number

Bits b_7 to b_4 shall specify the Disk Category.
They shall be set to 0001, indicating a rewritable disk.

Bits b_3 to b_0 shall specify the Version Number.
They shall be set to 0110, indicating this International Standard.

Other settings are prohibited by this International Standard.

Byte 1 - Disk size and maximum transfer rate

Bits b_7 to b_4 shall specify the disk size.
They shall be set to 0000, indicating a 120 mm disk, or
they shall be set to 0001, indicating a 80 mm disk.

Bits b_3 to b_0 shall specify the maximum transfer rate.
They shall be set to 1111, indicating that a maximum transfer rate is not specified.

Other settings are prohibited by this International Standard.

Byte 2 - Disk structure

Bits b_7 shall be set to ZERO.

© ISO/IEC 2004 All rights reserved

Copyright International Organization for Standardization
Reproduced by IHS under license with ISO
No reproduction or networking permitted without license from IHS
Not for Resale

Bits b_6 and b_5 shall specify the number of recording layers accessible through an Entrance surface.
They shall be set to 00, indicating a single layer.

Bit b_4 shall be set to ZERO.

Bits b_3 to b_0 shall specify the type of the recording layer.
They shall be set to 0100, indicating a rewritable recording layer.

Other settings are prohibited by this International Standard.

Byte 3 - Recording density

Bits b_7 to b_4 shall specify the average Channel bit length.
They shall be set to 0100, indicating 0,140 µm to 0,148 µm.

Bits b_3 to b_0 shall specify the average track pitch.
They shall be set to 0010, indicating an average track pitch of 0,615 µm.

Other settings are prohibited by this International Standard.

Byte 4 to 15 - Data Zone allocation

Byte 4 shall be set to (00).

Byte 5 to 7 shall be set to (031000) to specify the Sector Number 200 704 of the first Recorded Data Field of the Data Zone.

Byte 8 shall be set to (00).

Byte 9 to 11 shall be set to (265F5F) to specify the Sector Number 2 514 783 of the last Recorded Data Field of the Data Zone in case of a 120 mm disk, or set to (0E121F) to specify the Sector Number 922 143 of the last Recorded Data Field of the Data Zone in case of a 80 mm disk.

Byte 12 shall be set to (00).

Bytes 13 to 15 shall be set to (00).

Other settings are prohibited by this International Standard.

Bytes 16 – BCA Descriptor

This byte shall specify whether or not there is a Burst Cutting Area on the disk.

Bits b_0 to b_6 shall be set to ZERO.

Bit b_7, the BCA Flag shall specify whether or not a BCA exists,
if set to ZERO, it shall indicate that no BCA exists,
if set to ONE, it shall indicate that a BCA exists.

Bytes 17 to 31 - Reserved

These bytes shall all be set to (00).

Byte 32 - Disk type identification

This byte shall specify the Disk type.

This byte shall be set to (00), if a disk shall not be recorded without a case,
(10), if a disk may be recorded with or without a case.

Bytes 33 to 499 - Reserved

These bytes shall all be set to (00).

© ISO/IEC 2004 – All rights reserved
Copyright International Organization for Standardization
Reproduced by IHS under license with ISO
No reproduction or networking permitted without license from IHS
Not for Resale

Byte 500 - Velocity

This byte shall be set to 01010010, indicating a linear velocity of 8,2 m/s.

Other settings are prohibited by this International Standard.

Byte 501 - Read power at Velocity

This byte shall specify the Read power on the read-out surface of the disk for playback.
This byte shall be set to 00001010, indicating a Read power of 1,0 mW.

Other settings are prohibited by this International Standard.

Byte 502 - Adaptive write pulse control mode flag

This byte shall specify the mode of adaptive write pulse control, see 22.3.4.

Bit b_7 shall be set to
ZERO, if the mode is case 1,
ONE, if the mode is case 2.

Bits b_6 to b_0 shall be set to ZEROs.

Byte 503 - Peak power for land tracks

This byte shall specify the Peak power on the read-out surface of the disk for recording on land tracks.

This byte shall be set to a value indicating an actual Peak power specified by the following formula.
Actual Peak power = Value × 0,1 (mW)

Byte 504 - Bias power 1 for land tracks

This byte shall specify the Bias power 1 on the read-out surface of the disk for recording on land tracks.

This byte shall be set to a value indicating an actual Bias power 1 specified by the following formula.
Actual Bias power 1 = Value × 0,1 (mW)

Byte 505 - Bias power 2 for land tracks

This byte shall specify the Bias power 2 on the read-out surface of the disk for recording on land tracks.

This byte shall be set to a value indicating an actual Bias power 2 specified by the following formula.
Actual Bias power 2 = Value × 0,1 (mW)

Byte 506 - Bias power 3 for land tracks

This byte shall specify the Bias power 3 on the read-out surface of the disk for recording on land tracks.

This byte shall be set to a value indicating an actual Bias power 3 specified by the following formula.
Actual Bias power 3 = Value × 0,1 (mW)

Byte 507 - Peak power for groove tracks

This byte shall specify the Peak power on the read-out surface of the disk for recording on groove tracks.

This byte shall be set to a value indicating an actual Peak power specified by the following formula.
Actual Peak power = Value × 0,1 (mW)

Byte 508 - Bias power 1 for groove tracks

This byte shall specify the Bias power 1 on the read-out surface of the disk for recording on groove tracks.

This byte shall be set to a value indicating an actual Bias power 1 specified by the following formula.
Actual Bias power 1 = Value × 0,1 (mW)

Byte 509 - Bias power 2 for groove tracks

This byte shall specify the Bias power 2 on the read-out surface of the disk for recording on groove tracks.

© ISO/IEC 2004 All rights reserved

Copyright International Organization for Standardization
Reproduced by IHS under license with ISO
No reproduction or networking permitted without license from IHS
Not for Resale

This byte shall be set to a value indicating an actual Bias power 2 specified by the following formula.
Actual Bias power 2 = Value × 0,1 (mW)

Byte 510 - Bias power 3 for groove tracks

This byte shall specify the Bias power 3 on the read-out surface of the disk for recording on groove tracks.

This byte shall be set to a value indicating an actual Bias power 3 specified by the following formula.
Actual Bias power 3 = Value × 0,1 (mW)

Byte 511 - First pulse end time

This byte shall specify the first pulse end time (T_{EFP}), see annex H.

This byte shall be ignored if bit b_7 of Byte 502 is set to ONE.

This byte shall be set to a value indicating an actual end time specified by the following formula.
Actual end time = Value × 1 (ns)

Byte 512 - First pulse duration

This byte shall specify the first pulse duration (T_{FP}), see annex H.

This byte shall be ignored if bit b_7 of Byte 502 is set to ZERO.

This byte shall be set to a value indicating an actual duration specified by the following formula.
Actual duration = Value × 1 (ns)

Byte 513 - Multiple pulse duration

This byte shall specify the multiple pulse duration (T_{MP}), see annex H.

Bit b_7 shall be set to ZERO, indicating the same direction to the laser spot scanning.

Bits b_6 to b_0 shall be set to 0000000, indicating a T_{MP} of 0 ns.

Byte 514 - Last pulse start time

This byte shall specify the last pulse start time (T_{SLP}), see annex H.

This byte shall be ignored if bit b_7 of Byte 502 is set to ONE.

Bit b_7 shall be set to ZERO, if the direction is the same to the laser spot scanning,
ONE, if the direction is opposite to the laser spot scanning.

Bits b_6 to b_0 shall be set to a value indicating an actual start time specified by the following formula.
Actual start time = Value × 1 (ns)

Byte 515 - Last pulse duration

This byte shall specify the last pulse duration (T_{LP}), see annex H.

This byte shall be ignored if bit b_7 of Byte 502 is set to ZERO.

This byte shall be set to a value indicating an actual duration specified by the following formula.
Actual duration = Value × 1 (ns)

Byte 516 - Bias power 2 duration on land tracks at Velocity 1

This byte shall specify the Bias power 2 duration (T_{LC}), see annex H.

This byte shall be set to a value indicating an actual duration specified by the following formula.
Actual duration = Value × 1 (ns)

© ISO/IEC 2004 – All rights reserved
Copyright International Organization for Standardization
Reproduced by IHS under license with ISO
No reproduction or networking permitted without license from IHS
Not for Resale

Byte 517 - First pulse start time, at Mark 3T and Leading Space 3T

This byte shall specify the first pulse start time (T_{SFP}), see annex H.

This value is valid if the category of the mark length of the NRZI signal is M3 and the category of the space length of the NRZI signal adjacent to and before the mark is LS3, see 22.3.3.

Bit b_7 shall be set to ZERO, if the direction is the same to the laser spot scanning,
ONE, if the direction is opposite to the laser spot scanning.

Bits b_6 to b_0 shall be set to a value indicating an actual start time specified by the following formula.
Actual start time = Value × 1 (ns)

Byte 518 - First pulse start time, at Mark 4T and Leading Space 3T

This byte shall specify the first pulse start time (T_{SFP}), see annex H.

This value is valid if the category of the mark length of the NRZI signal is M4 and the category of the space length of the NRZI signal adjacent to and before the mark is LS3, see 22.3.3.

Bit b_7 shall be set to ZERO, if the direction is the same to the laser spot scanning,
ONE, if the direction is opposite to the laser spot scanning.

Bits b_6 to b_0 shall be set to a value indicating an actual start time specified by the following formula.
Actual start time = Value × 1 (ns)

Byte 519 - First pulse start time, at Mark 5T and Leading Space 3T

This byte shall specify the first pulse start time (T_{SFP}), see annex H.

This value is valid if the category of the mark length of the NRZI signal is M5 and the category of the space length of the NRZI signal adjacent to and before the mark is LS3, see 22.3.3.

Bit b_7 shall be set to ZERO, if the direction is the same to the laser spot scanning,
ONE, if the direction is opposite to the laser spot scanning.

Bits b_6 to b_0 shall be set to a value indicating an actual start time specified by the following formula.
Actual start time = Value × 1 (ns)

Byte 520 - First pulse start time, at Mark >5T and Leading Space 3T

This byte shall specify the first pulse start time (T_{SFP}), see annex H.

This value is valid if the category of the mark length of the NRZI signal is M6 and the category of the space length of the NRZI signal adjacent to and before the mark is LS3, see 22.3.3.

Bit b_7 shall be set to ZERO, if the direction is the same to the laser spot scanning,
ONE, if the direction is opposite to the laser spot scanning.

Bits b_6 to b_0 shall be set to a value indicating an actual start time specified by the following formula.
Actual start time = Value × 1 (ns)

Byte 521 - First pulse start time, at Mark 3T and Leading Space 4T

This byte shall specify the first pulse start time (T_{SFP}), see annex H.

This value is valid if the category of the mark length of the NRZI signal is M3 and the category of the space length of the NRZI signal adjacent to and before the mark is LS4, see 22.3.3.

Bit b_7 shall be set to ZERO, if the direction is the same to the laser spot scanning,
ONE, if the direction is opposite to the laser spot scanning.

Bits b_6 to b_0 shall be set to a value indicating an actual start time specified by the following formula.
Actual start time = Value × 1 (ns)

© ISO/IEC 2004 All rights reserved

Copyright International Organization for Standardization
Reproduced by IHS under license with ISO
No reproduction or networking permitted without license from IHS
Not for Resale

Byte 522 - First pulse start time, at Mark 4T and Leading Space 4T

This byte shall specify the first pulse start time (T_{SFP}), see annex H.

This value is valid if the category of the mark length of the NRZI signal is M4 and the category of the space length of the NRZI signal adjacent to and before the mark is LS4, see 22.3.3.

Bit b_7 shall be set to ZERO, if the direction is the same to the laser spot scanning,
ONE, if the direction is opposite to the laser spot scanning.

Bits b_6 to b_0 shall be set to a value indicating an actual start time specified by the following formula.
Actual start time = Value × 1 (ns)

Byte 523 - First pulse start time, at Mark 5T and Leading Space 4T

This byte shall specify the first pulse start time (T_{SFP}), see annex H.

This value is valid if the category of the mark length of the NRZI signal is M5 and the category of the space length of the NRZI signal adjacent to and before the mark is LS4, see 22.3.3.

Bit b_7 shall be set to ZERO, if the direction is the same to the laser spot scanning,
ONE, if the direction is opposite to the laser spot scanning.

Bits b_6 to b_0 shall be set to a value indicating an actual start time specified by the following formula.
Actual start time = Value × 1 (ns)

Byte 524 - First pulse start time, at Mark >5T and Leading Space 4T

This byte shall specify the first pulse start time (T_{SFP}), see annex H.

This value is valid if the category of the mark length of the NRZI signal is M6 and the category of the space length of the NRZI signal adjacent to and before the mark is LS4, see 22.3.3.

Bit b_7 shall be set to ZERO, if the direction is the same to the laser spot scanning,
ONE, if the direction is opposite to the laser spot scanning.

Bits b_6 to b_0 shall be set to a value indicating an actual start time specified by the following formula.
Actual start time = Value × 1 (ns)

Byte 525 - First pulse start time, at Mark 3T and Leading Space 5T

This byte shall specify the first pulse start time (T_{SFP}), see annex H.

This value is valid if the category of the mark length of the NRZI signal is M3 and the category of the space length of the NRZI signal adjacent to and before the mark is LS5, see 22.3.3.

Bit b_7 shall be set to ZERO, if the direction is the same to the laser spot scanning,
ONE, if the direction is opposite to the laser spot scanning.

Bits b_6 to b_0 shall be set to a value indicating an actual start time specified by the following formula.
Actual start time = Value × 1 (ns)

Byte 526 - First pulse start time, at Mark 4T and Leading Space 5T

This byte shall specify the first pulse start time (T_{SFP}), see annex H.

This value is valid if the category of the mark length of the NRZI signal is M4 and the category of the space length of the NRZI signal adjacent to and before the mark is LS5, see 22.3.3.

Bit b_7 shall be set to ZERO, if the direction is the same to the laser spot scanning,
ONE, if the direction is opposite to the laser spot scanning.

Bits b_6 to b_0 shall be set to a value indicating an actual start time specified by the following formula.
Actual start time = Value × 1 (ns)

© ISO/IEC 2004 – All rights reserved
Copyright International Organization for Standardization
Reproduced by IHS under license with ISO
No reproduction or networking permitted without license from IHS
Not for Resale

Byte 527 - First pulse start time, at Mark 5T and Leading Space 5T

This byte shall specify the first pulse start time (T_{SFP}), see annex H.

This value is valid if the category of the mark length of the NRZI signal is M5 and the category of the space length of the NRZI signal adjacent to and before the mark is LS5, see 22.3.3.

Bit b_7 shall be set to ZERO, if the direction is the same to the laser spot scanning,
ONE, if the direction is opposite to the laser spot scanning.

Bits b_6 to b_0 shall be set to a value indicating an actual start time specified by the following formula.

Actual start time = Value × 1 (ns)

Byte 528 - First pulse start time, at Mark >5T and Leading Space 5T

This byte shall specify the first pulse start time (T_{SFP}), see annex H.

This value is valid if the category of the mark length of the NRZI signal is M6 and the category of the space length of the NRZI signal adjacent to and before the mark is LS5, see 22.3.3.

Bit b_7 shall be set to ZERO, if the direction is the same to the laser spot scanning,
ONE, if the direction is opposite to the laser spot scanning.

Bits b_6 to b_0 shall be set to a value indicating an actual start time specified by the following formula.

Actual start time = Value × 1 (ns)

Byte 529 - First pulse start time, at Mark 3T and Leading Space >5T

This byte shall specify the first pulse start time (T_{SFP}), see annex H.

This value is valid if the category of the mark length of the NRZI signal is M3 and the category of the space length of the NRZI signal adjacent to and before the mark is LS6, see 22.3.3.

Bit b_7 shall be set to ZERO, if the direction is the same to the laser spot scanning,
ONE, if the direction is opposite to the laser spot scanning.

Bits b_6 to b_0 shall be set to a value indicating an actual start time specified by the following formula.

Actual start time = Value × 1 (ns)

Byte 530 - First pulse start time, at Mark 4T and Leading Space >5T

This byte shall specify the first pulse start time (T_{SFP}), see annex H.

This value is valid if the category of the mark length of the NRZI signal is M4 and the category of the space length of the NRZI signal adjacent to and before the mark is LS6, see 22.3.3.

Bit b_7 shall be set to ZERO, if the direction is the same to the laser spot scanning,
ONE, if the direction is opposite to the laser spot scanning.

Bits b_6 to b_0 shall be set to a value indicating an actual start time specified by the following formula.

Actual start time = Value × 1 (ns)

Byte 531 - First pulse start time, at Mark 5T and Leading Space >5T

This byte shall specify the first pulse start time (T_{SFP}), see annex H.

This value is valid if the category of the mark length of the NRZI signal is M5 and the category of the space length of the NRZI signal adjacent to and before the mark is LS6, see 22.3.3.

Bit b_7 shall be set to ZERO, if the direction is the same to the laser spot scanning,
ONE, if the direction is opposite to the laser spot scanning.

Bits b_6 to b_0 shall be set to a value indicating an actual start time specified by the following formula.

Actual start time = Value × 1 (ns)

-`-`-`,`-`-`,,`,,`,`,,`---

© ISO/IEC 2004 All rights reserved

Copyright International Organization for Standardization
Reproduced by IHS under license with ISO
No reproduction or networking permitted without license from IHS
Not for Resale

Byte 532 - First pulse start time, at Mark >5T and Leading Space >5T

This byte shall specify the first pulse start time (T_{SFP}), see annex H.

This value is valid if the category of the mark length of the NRZI signal is M6 and the category of the space length of the NRZI signal adjacent to and before the mark is LS6, see 22.3.3.

Bit b_7 shall be set to ZERO, if the direction is the same to the laser spot scanning,
ONE, if the direction is opposite to the laser spot scanning.

Bits b_6 to b_0 shall be set to a value indicating an actual start time specified by the following formula.

Actual start time = Value × 1 (ns)

Byte 533 - Last pulse end time, at Mark 3T and Trailing Space 3T

This byte shall specify the last pulse end time (T_{ELP}), see annex H.

This value is valid if the category of the mark length of the NRZI signal is M3 and the category of the space length of the NRZI signal adjacent to and after the mark is TS3, see 22.3.3.

This byte shall be set to a value indicating an actual end time specified by the following formula.

Actual end time = Value × 1 (ns)

Byte 534 - Last pulse end time, at Mark 4T and Trailing Space 3T

This byte shall specify the last pulse end time (T_{ELP}), see annex H.

This value is valid if the category of the mark length of the NRZI signal is M4 and the category of the space length of the NRZI signal adjacent to and after the mark is TS3, see 22.3.3.

This byte shall be set to a value indicating an actual end time specified by the following formula.

Actual end time = Value × 1 (ns)

Byte 535 - Last pulse end time, at Mark 5T and Trailing Space 3T

This byte shall specify the last pulse end time (T_{ELP}), see annex H.

This value is valid if the category of the mark length of the NRZI signal is M5 and the category of the space length of the NRZI signal adjacent to and after the mark is TS3, see 22.3.3.

This byte shall be set to a value indicating an actual end time specified by the following formula.

Actual end time = Value × 1 (ns)

Byte 536 - Last pulse end time, at Mark >5T and Trailing Space 3T

This byte shall specify the last pulse end time (T_{ELP}), see annex H.

This value is valid if the category of the mark length of the NRZI signal is M6 and the category of the space length of the NRZI signal adjacent to and after the mark is TS3, see 22.3.3.

This byte shall be set to a value indicating an actual end time specified by the following formula.

Actual end time = Value × 1 (ns)

Byte 537 - Last pulse end time, at Mark 3T and Trailing Space 4T

This byte shall specify the last pulse end time (T_{ELP}), see annex H.

This value is valid if the category of the mark length of the NRZI signal is M3 and the category of the space length of the NRZI signal adjacent to and after the mark is TS4, see 22.3.3.

This byte shall be set to a value indicating an actual end time specified by the following formula.

Actual end time = Value × 1 (ns)

Byte 538 - Last pulse end time, at Mark 4T and Trailing Space 4T

This byte shall specify the last pulse end time (T_{ELP}), see annex H.

--`,,`,,`-`-`,,`,,`,`,,`---
© ISO/IEC 2004 – All rights reserved
Copyright International Organization for Standardization
Reproduced by IHS under license with ISO
No reproduction or networking permitted without license from IHS
Not for Resale

This value is valid if the category of the mark length of the NRZI signal is M4 and the category of the space length of the NRZI signal adjacent to and after the mark is TS4, see 22.3.3.

This byte shall be set to a value indicating an actual end time specified by the following formula.

Actual end time = Value × 1 (ns)

Byte 539 - Last pulse end time, at Mark 5T and Trailing Space 4T

This byte shall specify the last pulse end time (T_{ELP}), see annex H.

This value is valid if the category of the mark length of the NRZI signal is M5 and the category of the space length of the NRZI signal adjacent to and after the mark is TS4, see 22.3.3.

This byte shall be set to a value indicating an actual end time specified by the following formula.

Actual end time = Value × 1 (ns)

Byte 540 - Last pulse end time, at Mark >5T and Trailing Space 4T

This byte shall specify the last pulse end time (T_{ELP}), see annex H.

This value is valid if the category of the mark length of the NRZI signal is M6 and the category of the space length of the NRZI signal adjacent to and after the mark is TS4, see 22.3.3.

This byte shall be set to a value indicating an actual end time specified by the following formula.

Actual end time = Value × 1 (ns)

Byte 541 - Last pulse end time, at Mark 3T and Trailing Space 5T

This byte shall specify the last pulse end time (T_{ELP}), see annex H.

This value is valid if the category of the mark length of the NRZI signal is M3 and the category of the space length of the NRZI signal adjacent to and after the mark is TS5, see 22.3.3.

This byte shall be set to a value indicating an actual end time specified by the following formula.

Actual end time = Value × 1 (ns)

Byte 542 - Last pulse end time, at Mark 4T and Trailing Space 5T

This byte shall specify the last pulse end time (T_{ELP}), see annex H.

This value is valid if the category of the mark length of the NRZI signal is M4 and the category of the space length of the NRZI signal adjacent to and after the mark is TS5, see 22.3.3.

This byte shall be set to a value indicating an actual end time specified by the following formula.

Actual end time = Value × 1 (ns)

Byte 543 - Last pulse end time, at Mark 5T and Trailing Space 5T

This byte shall specify the last pulse end time (T_{ELP}), see annex H.

This value is valid if the category of the mark length of the NRZI signal is M5 and the category of the space length of the NRZI signal adjacent to and after the mark is TS5, see 22.3.3.

This byte shall be set to a value indicating an actual end time specified by the following formula.

Actual end time = Value × 1 (ns)

Byte 544 - Last pulse end time, at Mark >5T and Trailing Space 5T

This byte shall specify the last pulse end time (T_{ELP}), see annex H.

This value is valid if the category of the mark length of the NRZI signal is M6 and the category of the space length of the NRZI signal adjacent to and after the mark is TS5, see 22.3.3.

This byte shall be set to a value indicating an actual end time specified by the following formula.

Actual end time = Value × 1 (ns)

© ISO/IEC 2004 All rights reserved

Copyright International Organization for Standardization
Reproduced by IHS under license with ISO
No reproduction or networking permitted without license from IHS
Not for Resale

Byte 545 - Last pulse end time, at Mark 3T and Trailing Space >5T

This byte shall specify the last pulse end time (T_{ELP}), see annex H.

This value is valid if the category of the mark length of the NRZI signal is M3 and the category of the space length of the NRZI signal adjacent to and after the mark is TS6, see 22.3.3.

This byte shall be set to a value indicating an actual end time specified by the following formula.

Actual end time = Value × 1 (ns)

Byte 546 - Last pulse end time, at Mark 4T and Trailing Space >5

This byte shall specify the last pulse end time (T_{ELP}), see annex H.

This value is valid if the category of the mark length of the NRZI signal is M4 and the category of the space length of the NRZI signal adjacent to and after the mark is TS6, see 22.3.3.

This byte shall be set to a value indicating an actual end time specified by the following formula.

Actual end time = Value × 1 (ns)

Byte 547 - Last pulse end time, at Mark 5T and Trailing Space >5T

This byte shall specify the last pulse end time (T_{ELP}), see annex H.

This value is valid if the category of the mark length of the NRZI signal is M5 and the category of the space length of the NRZI signal adjacent to and after the mark is TS6, see 22.3.3.

This byte shall be set to a value indicating an actual end time specified by the following formula.

Actual end time = Value × 1 (ns)

Byte 548 - Last pulse end time, at Mark >5T and Trailing Space >5T

This byte shall specify the last pulse end time (T_{ELP}), see annex H.

This value is valid if the category of the mark length of the NRZI signal is M6 and the category of the space length of the NRZI signal adjacent to and after the mark is TS6, see 22.3.3.

This byte shall be set to a value indicating an actual end time specified by the following formula.

Actual end time = Value × 1 (ns)

Bytes 549 to 596 - Disk manufacturer's name

This field is optional for use.

If this field is not used, it shall be set to (00).

If this field is used, it shall satisfy the following conditions.

– This field shall consist of 48 bytes of ISO/IEC 10646 which correspond to the disk manufacturer's name.

– The available characters for this field shall be limited to that represented by (0D) and those by (20) to (7E).

– The first character of the disk manufacture's name shall be recorded in the first byte of this field.

– The disk manufacturer's name shall be terminated with (0D) if the field is not full.

– Bytes after (0D) in this field shall be set to (20).

Bytes 597 to 612 - Disk manufacturer's supplementary information

This field is optional for use. The disk manufacturer's supplementary information (e.g. manufacturing lot number, date, place, and so forth) can be located in this field.

If this field is not used, it shall be set to all (00).

If this field is used, then it shall satisfy the following conditions.

– This field shall consist of 16 bytes of ISO/IEC 10646 which correspond to the disk manufacturer's supplementary information.

– The available characters for this field shall be limited to that represented by (0D) and those by (20) to (7E).

© ISO/IEC 2004 – All rights reserved
Copyright International Organization for Standardization
Reproduced by IHS under license with ISO
No reproduction or networking permitted without license from IHS
Not for Resale

– The disk manufacturer's supplementary name shall be terminated with (0D) if the field is not full.

– Bytes after (0D) in this field shall be set to (20).

Byte 613 to 623 – Write power control parameters

This field is optional for use. If a disk manufacturer does not use this field, then this field shall be set to (00). If a disk manufacturer uses this field, then the contents of this field shall be as follows.

– The values in Bytes 615 to 623 shall be decided by the disk manufacturer.

– The write power control parameters may be used for write power calibration by a drive.

Bytes 613 and 614 - Identifier

This field shall be set to (01)(01).

Byte 615 - Ratio of Peak power for land tracks to threshold peak power for land tracks

This byte shall specify the ratio of the Peak power for land tracks to the threshold Peak power for land tracks. The threshold Peak power is defined as the Peak power when the jitter value of random data becomes 13 % with the Bias power 1, 2, 3 and the write pulse set to the values given in Bytes 504 to 506, Byte 502 and Bytes 511 to 548 of the physical format information.

This byte shall be set to a value indicating an actual ratio of Peak power for land tracks to threshold Peak power for land tracks specified by the following formula.

Actual ratio = Value × 0,01

Byte 616 - Target asymmetry

This byte shall specify the value of the asymmetry of 6T signal recorded on land tracks with the Peak power, Bias power 1, 2, 3 and the write pulse set to the values given in BP617 to BP620, BP502 and BP511 to BP548 of the physical format information.

Bit b_7 shall be set to ZERO, in case of 0 or plus sign,
ONE, in case of minus sign.

Bits b_6 to b_0 shall be set to a value indicating an actual value of asymmetry specified by the following formula.

Actual value of asymmetry = Value × 1 (%)

Byte 617 - Temporary Peak power

This byte shall specify the temporary Peak power on the read-out surface of the disk for determining the adaptive write control tables.

This byte shall be set to a value indicating an actual temporary Peak power specified by the following formula.

Actual temporary Peak power = Value × 0,1 (mW)

Byte 618 - Temporary Bias power 1

This byte shall specify the temporary Bias power 1 on the read-out surface of the disk for determining the adaptive write control tables.

This byte shall be set to a value indicating an actual temporary Bias power 1 specified by the following formula.

Actual temporary Bias power 1 = Value × 0,1 (mW)

Byte 619 - Temporary Bias power 2

This byte shall specify the temporary Bias power 2 on the read-out surface of the disk for determining the adaptive write control tables.

This byte shall be set to a value indicating an actual temporary Bias power 2 specified by the following formula.

Actual temporary Bias power 2 = Value × 0,1 (mW)

Byte 620 - Temporary Bias power 3

This byte shall specify the temporary Bias power 3 on the read-out surface of the disk for determining the adaptive write control tables.

© ISO/IEC 2004 All rights reserved

Copyright International Organization for Standardization
Reproduced by IHS under license with ISO
No reproduction or networking permitted without license from IHS
Not for Resale

This byte shall be set to a value indicating an actual temporary Bias power 3 specified by the following formula.

Actual temporary Bias power 3 = Value × 0,1 (mW)

Byte 621 - Ratio of Peak power for groove tracks to threshold peak power for groove tracks

This byte shall specify the ratio of the Peak power for groove tracks to the threshold Peak power for groove tracks. The threshold Peak power is defined as the Peak power when the jitter value of random data becomes 13 % with the Bias power 1, 2, 3 and the write pulse set to the values given in Bytes 504 to 506, Byte 502 and Bytes 511 to 548 of the physical format information.

This byte shall be set to a value indicating an actual ratio of Peak power for groove tracks to threshold Peak power for groove tracks specified by the following formula.

Actual ratio = Value × 0,01

Byte 622 - Ratio of Peak power for land tracks to threshold 6T peak power for land tracks

This byte shall specify the ratio of the Peak power for land tracks to the threshold 6T Peak power for land tracks. The threshold 6T Peak power is defined as the Peak power when the jitter value of 6T pattern becomes 13 % with the Bias power 1, 2, 3 and the write pulse set to the values given in Bytes 504 to 506, Byte 502 and Bytes 511 to 548 of the physical format information.

This byte shall be set to a value indicating an actual ratio of Peak power for land tracks to threshold 6T Peak power for land tracks specified by the following formula.

Actual ratio = Value × 0,01

Byte 623 - Ratio of Peak power for groove tracks to threshold 6T peak power for groove tracks

This byte shall specify the ratio of the Peak power for groove tracks to the threshold 6T Peak power for groove tracks. The threshold 6T Peak power is defined as the Peak power when the jitter value of 6T pattern becomes 13 % with the Bias power 1, 2, 3 and the write pulse set to the values given in Bytes 504 to 506, Byte 502 and Bytes 511 to 548 of the physical format information.

This byte shall be set to a value indicating an actual ratio of Peak power for groove tracks to threshold 6T Peak power for groove tracks specified by the following formula.

Actual ratio = Value × 0,01

Bytes 624 to 2047 - Reserved

These bytes shall be set to (00).

16.2.6.2 Disk manufacturing information

This International Standard does not specify the format and the content of these 2 048 bytes. They shall be ignored for interchange.

16.2.7 Connection Zone

The Connection Zone is intended to connect the Embossed Area and the Rewritable Area. This zone shall have neither grooves nor embossed marks.

The distance between the track centreline of the last sector of the Buffer Zone 2, sector No. (02FFFF), and that of the first sector of Guard Track Zone 1, sector No. (030000), shall be in the range 1,42 μm to 6,16 μm, see figure 28.

© ISO/IEC 2004 – All rights reserved
Copyright International Organization for Standardization
Reproduced by IHS under license with ISO
No reproduction or networking permitted without license from IHS
Not for Resale

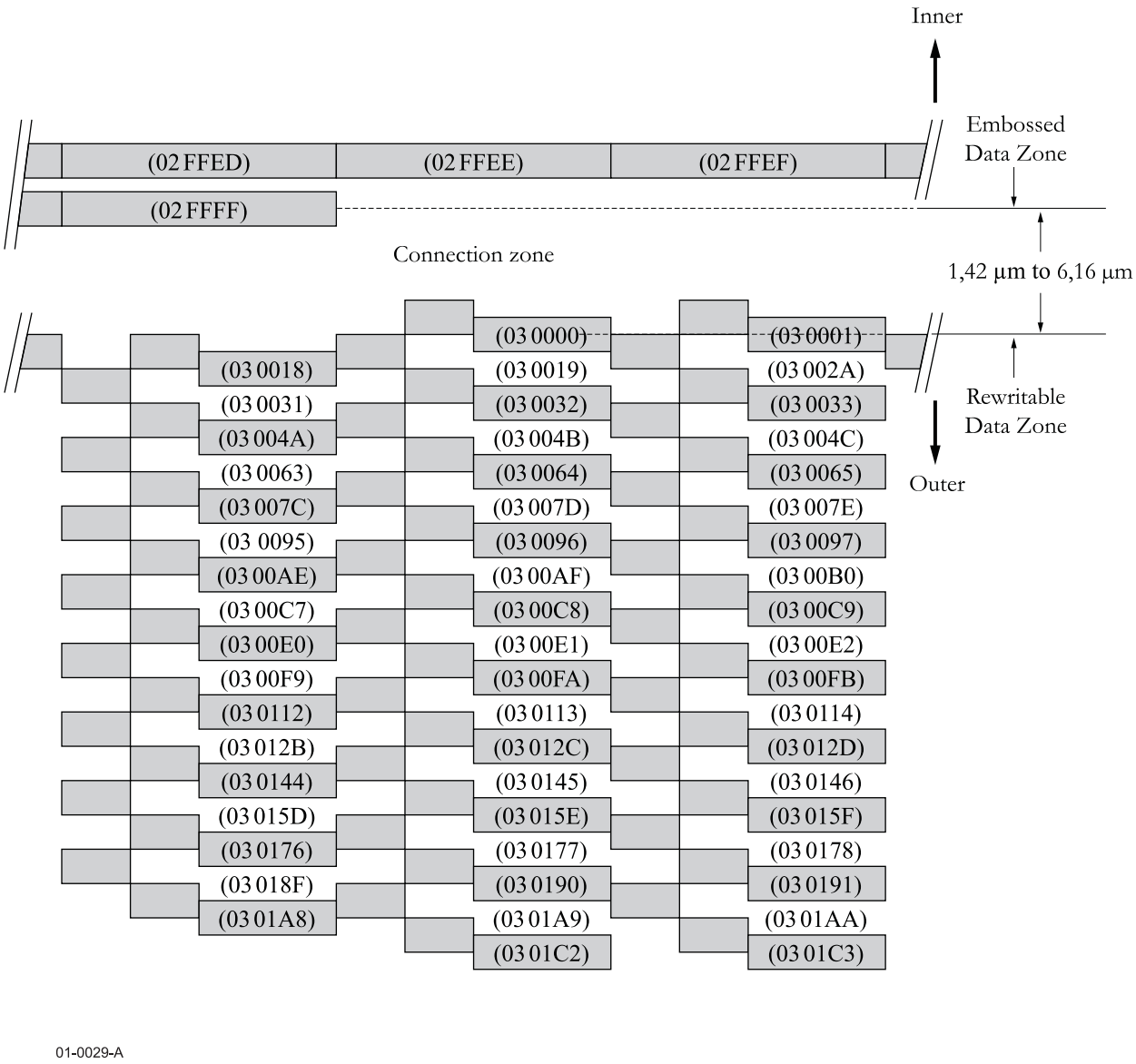

Figure 28 - Structure around the Connection Zone

16.2.8 Guard Track Zones 1 and 2

Both zones shall consist of 512 sectors each. They shall contain grooves, lands, Header fields, Mirror fields and the Recording fields. The recording fields of the Guard Track Zones shall be unrecorded.

16.2.9 Disk Test Zone

This zone shall consist of 1 024 sectors. It shall contain grooves, lands, Header fields, Mirror fields and Recording fields.

This zone is intended for use by the disk manufacturers, and shall be ignored in interchange.

16.2.10 Drive Test Zone

This zone shall consist of 1 792 sectors. It shall contain grooves, lands, Header fields, Mirror fields and Recording fields.

This zone is intended for use by the drive, and shall be ignored in interchange.

--`,`-`-`,,`,,`,`,,`---
© ISO/IEC 2004 All rights reserved
Copyright International Organization for Standardization
Reproduced by IHS under license with ISO
No reproduction or networking permitted without license from IHS
Not for Resale

16.2.11 Disk Identification Zone

The Disk identification Zone in the Lead-in area shall contain Disk identification information, Drive information and a reserved area. The Disk identification information shall comprise 4 ECC Blocks starting from sector number (030F00).

The contents of the 16 sectors of each Disk identification information block shall be identical.

The Drive information is comprised of 2 ECC Blocks starting from sector number (030F40).

The content of the 16 sectors of each Drive information block shall be identical.

The structure of a Disk identification zone in the Lead-in area is as shown in figure 29.

The Drive information shall be read or written in ascending order of sector number.

Sector No. 200 448	Disk identification information 1 16 Sectors	Sector No. (030F00)
Sector No. 200 464	Disk identification information 2 16 Sectors	Sector No. (030F10)
Sector No. 200 480	Disk identification information 3 16 Sectors	Sector No. (030F20)
Sector No. 200 496	Disk identification information 4 16 Sectors	Sector No. (030F30)
Sector No. 200 512	Drive information 1 16 Sectors	Sector No. (030F40)
Sector No. 200 528	Drive information 2 16 Sectors	Sector No. (030F50)
Sector No. 200 544	Reserved 16 Sectors	Sector No. (030F60)
Sector No. 200 560	Reserved 16 Sectors	Sector No. (030F70)

Figure 29 - Structure of a Disk Identification Zone in the Lead-in Zone

16.2.11.1 Disk identification information

The Disk identification information shall contain the specific information which describes the physical and/or logical status of the disk.

The contents of the Disk identification information are as shown in table 8.

The Disk identification information shall be read or written in ascending order of sector number.

When the disk is initialized or re-initialized, the write inhibit flags shall be set to ZERO.

Table 8 - Contents of the Disk identification information

Byte position	Contents	Number of bytes
0	Write inhibit flag for a disk	1
1 to 32 767	Reserved	32 767

Byte 0 – Write inhibit flag for a disk

Bits b_7 shall be set to

ZERO, if the whole disk is not write inhibited,

ONE, if the whole disk is write inhibited except the Drive test zone and the Disk identification zone.

Bits b_6 to b_0 shall be set to ZEROs.

© ISO/IEC 2004 – All rights reserved
Copyright International Organization for Standardization
Reproduced by IHS under license with ISO
No reproduction or networking permitted without license from IHS
Not for Resale

Byte 1 to 32 767 - Reserved

All bytes shall be set to (00).

16.2.11.2 Write inhibition

The write-inhibit flag in the Disk identification information can be used for a write protection function for a disk without a case. The write-inhibit flag is optional. The write inhibit flag may be independently used for a disk in a case, in addition to the mechanical write inhibit hole on the case.

16.2.11.3 Drive information

The Drive information is optional for use. The structure of a Drive information block is as shown in figure 30.

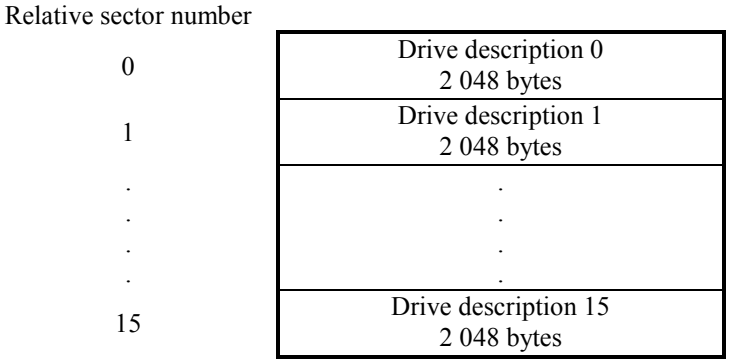

Figure 30 - Structure of a Drive information block

If this information is used, then this field shall satisfy the following conditions.

When updating the Drive information blocks, the following procedure shall be used:

a) When Drive information 1 can be read:

The new Drive description 0 shall be written in relative sector number 0 of both Drive information 1 and Drive information 2. The contents, which had previously been written in relative sector number 0 to 14 of Drive information 1, shall be written in relative sector number 1 to 15 of both Drive information 1 and Drive information 2.

b) When Drive information1 cannot be read and Drive information 2 can be read:

The new Drive description 0 shall be written in relative sector number 0 of both Drive information 1 and Drive information 2. The contents, which had previously been written in relative sector number 0 to 14 of Drive information 2, shall be written in relative sector number 1 to 15 of both Drive information 1 and Drive information 2.

c) When Drive information 1 and Drive information 2 cannot be read:

The new Drive description 0 shall be written in relative sector number 0 of both Drive information 1 and Drive information 2. Relative sector number 1 to 15 of both Drive information 1 and Drive information 2 shall be set to (00).

The contents of the Drive description is shown in table 9.

© ISO/IEC 2004 All rights reserved
Copyright International Organization for Standardization
Reproduced by IHS under license with ISO
No reproduction or networking permitted without license from IHS
Not for Resale

Table 9 - Contents of the Drive description

Byte position	Contents	Number of bytes
0 to 47	Drive manufacturer's name	48
48 to 95	Additional information	48
96 to 2 047	Drive condition	1 952

Bytes 0 to 47 - Drive manufacturer's name

This field shall be consist of 48 bytes of ISO/IEC 10646 which corresponds to the drive manufacturer's name.

The available characters for this field shall be limited to that represented by (0D) and those by (20) to (7E).

The first character of the drive manufacturer's name shall be specified in the first byte of this field.

The drive manufacturer's name shall be terminated with (0D) if the field is not full.

Bytes after (0D) in this field shall be set to (20).

Bytes 48 to 95 - Additional information

Additional information (e.g. manufacturing serial number, date, place, and so forth) can be located in this field.

This field shall consist of 48 bytes of ISO/IEC 10646 which corresponds to the drive manufacturer's additional information.

The available characters for this field shall be limited to that represented by (0D) and those by (20) to (7E).

The additional information shall be terminated with (0D) if the field is not full.

Bytes after (0D) in this field shall set to (20).

Bytes 96 to 2047 - Drive condition

Only the drive manufacturer defined in Byte 0 to 47 may write data in this field.

The drive manufacturer may write any data in this field.

16.2.12 DMA 1 and DMA 2

This zone shall consist of 128 sectors. DMA 1 and DMA 2 shall be as specified in 17.1.

16.3 Data Zone

16.3.1 Structure of Data Zone and of the Defect Management Areas (DMAs)

The Data Zone shall contain a Rewritable Area. The Data Zone shall start from sector No. (031000).

Each zone of the Data Zone shall comprise Guard Track Zones as specified in 16.3.2.

The position of the DMAs relative to the Data Zone is shown in figure 31.

© ISO/IEC 2004 – All rights reserved
Copyright International Organization for Standardization
Reproduced by IHS under license with ISO
No reproduction or networking permitted without license from IHS
Not for Resale

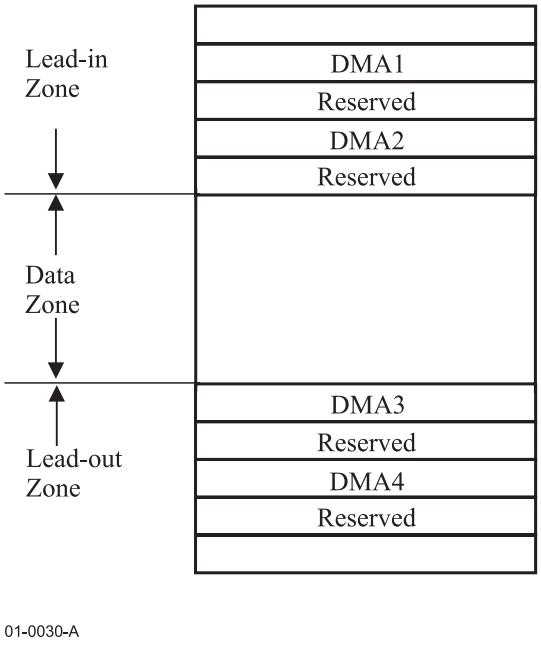

Figure 31 – Location of the DMAs relative to the Data Zone

16.3.2 Guard Track Zones

Each zone within the Data Zone shall start and end with a Guard Track Zone, except Zone 0 which does not start with a Guard Track Zone and Zone 34 in case of 120 mm disk and Zone 13 in case of 80 mm disk which does not end with a Guard Track Zone. The number of sectors in the Guard Track Zones shall be the smallest multiple of 16 sufficient to occupy two tracks.

The Guard Track Zones shall contain embossed grooves, Header fields and Recording fields which shall be unrecorded.

16.3.3 Partitioning

The Data area shall consist of a single Group, comprising the User area and the Spare area. The Group shall consist of 35 zones in case of 120 mm disk and 14 zones in case of 80 mm disk.

There are two types of the Spare area; Primary spare area and Supplementary spare area. The Primary spare area shall be allocated during Formatting. The Supplementary spare area may be allocated after or during Formatting, as the need arises. When the Supplementary spare area is allocated, sectors in the Supplementary spare area shall not have Logical Sector Number (LSN). The layout of Spare area shall be independent from the timing of allocation. The allocation of these areas is as shown in table 10 in case of 120 mm disk and in table 11 in case of 80 mm disk.

Sectors in the User Area shall have a sequential LSN, except as specified in clause 17. All sectors in the User Area specified in table 10 and table 11 shall be numbered sequentially by the LSN in such a way that the first sector in the User Area in Zone 0 be set to 0 and incremented by 1 for every sector, and the first sector of the User Area in Zone 1 is continued from the last sector in the User Area in Zone 0.

The Data Zone shall consist of Data blocks as a unit for writing and reading of ECC Blocks. Each Data block shall consist of 16 sectors having consecutive LSN unless the Data block is replaced using the Linear Replacement Algorithm. The Data block shall be allocated in such a way that the LSN of the first sector in the Data block shall be a multiple of 16.

The User Area and the Spare Area shall be partitioned into Data Blocks and Spare Blocks. Each sector of a Data Block shall have a LSN. A Data Block shall be in one of the following states:

– It is an ECC Block.

– Its Data Field Number is in the range (000000) to (00000F).

– It is unwritten.

© ISO/IEC 2004 All rights reserved
Copyright International Organization for Standardization
Reproduced by IHS under license with ISO
No reproduction or networking permitted without license from IHS
Not for Resale

Copyright International Organization for Standardization
Reproduced by IHS under license with ISO
No reproduction or networking permitted without license from IHS

Table 10 - Structure of the Group for 120 mm disk

Zone	Number of Sectors per track	Sector number of the first sector of the Zone	Starting Guard Track Zone Sector No. of the first and last sectors	Group: User Area Sector Numbers	Group: User Area Number of blocks	Group: Spare Area Sector Numbers	Group: Spare Area Number of blocks	Ending Guard Track Zone Sector No. of the first and last sectors	Sector number of the last sector of the Zone	LSN of the 1st sector in the Zone
0	25	(031000)	--------	(034200) to (0398DF)	1390	(031000) to (0341FF)	800	(0398E0) to (03991F)	(03991F)	0
1	26	(039920)	(039920) to (03995F)	(039960) to (04381F)	2540	----	0	(043820) to (04385F)	(04385F)	22240
2	27	(043860)	(043860) to (04389F)	(0438A0) to (04DD7F)	2638	----	0	(04DD80) to (04DDBF)	(04DDBF)	62880
3	28	(04DDC0)	(04DDC0) to (04DDFF)	(04DE00) to (0588FF)	2736	----	0	(058900) to (05893F)	(05893F)	105088
4	29	(058940)	(058940) to (05897F)	(058980) to (063A9F)	2834	----	0	(063AA0) to (063ADF)	(063ADF)	148864
5	30	(063AE0)	(063AE0) to (063B1F)	(063B20) to (06F25F)	2932	----	0	(06F260) to (06F29F)	(06F29F)	194208
6	31	(06F2A0)	(06F2A0) to (06F2DF)	(06F2E0) to (07B03F)	3030	----	0	(07B040) to (07B07F)	(07B07F)	241120
7	32	(07B080)	(07B080) to (07B0BF)	(07B0C0) to (08743F)	3128	----	0	(087440) to (08747F)	(08747F)	289600
8	33	(087480)	(087480) to (0874CF)	(0874D0) to (093E4F)	3224	----	0	(093E50) to (093E9F)	(093E9F)	339648
9	34	(093EA0)	(093EA0) to (093EEF)	(093EF0) to (0A0E8F)	3322	----	0	(0A0E90) to (0A0EDF)	(0A0EDF)	391232
10	35	(0A0EE0)	(0A0EE0) to (0A0F2F)	(0A0F30) to (0AE4EF)	3420	----	0	(0AE4F0) to (0AE53F)	(0AE53F)	444384
11	36	(0AE540)	(0AE540) to (0AE58F)	(0AE590) to (0BC16F)	3518	----	0	(0BC170) to (0BC1BF)	(0BC1BF)	499104
12	37	(0BC1C0)	(0BC1C0) to (0BC20F)	(0BC210) to (0CA40F)	3616	----	0	(0CA410) to (0CA45F)	(0CA45F)	555392
13	38	(0CA460)	(0CA460) to (0CA4AF)	(0CA4B0) to (0D8CCF)	3714	----	0	(0D8CD0) to (0D8D1F)	(0D8D1F)	613248
14	39	(0D8D20)	(0D8D20) to (0D8D6F)	(0D8D70) to (0E7BAF)	3812	----	0	(0E7BB0) to (0E7BFF)	(0E7BFF)	672672
15	40	(0E7C00)	(0E7C00) to (0E7C4F)	(0E7C50) to (0F70AF)	3910	----	0	(0F70B0) to (0F70FF)	(0F70FF)	733664
16	41	(0F7100)	(0F7100) to (0F715F)	(0F7160) to (106BBF)	4006	----	0	(106BC0) to (106C1F)	(106C1F)	796224
17	42	(106C20)	(106C20) to (106C7F)	(106C80) to (116CFF)	4104	----	0	(116D00) to (116D5F)	(116D5F)	860320
18	43	(116D60)	(116D60) to (116DBF)	(116DC0) to (12745F)	4202	----	0	(127460) to (1274BF)	(1274BF)	925984
19	44	(1274C0)	(1274C0) to (12751F)	(127520) to (1381DF)	4300	----	0	(1381E0) to (13823F)	(13823F)	993216
20	45	(138240)	(138240) to (13829F)	(1382A0) to (14957F)	4398	----	0	(149580) to (1495DF)	(1495DF)	1062016
21	46	(1495E0)	(1495E0) to (14963F)	(149640) to (15AF3F)	4496	----	0	(15AF40) to (15AF9F)	(15AF9F)	1132384
22	47	(15AFA0)	(15AFA0) to (15AFFF)	(15B000) to (16CF1F)	4594	----	0	(16CF20) to (16CF7F)	(16CF7F)	1204320
23	48	(16CF80)	(16CF80) to (16CFDF)	(16CFE0) to (17F51F)	4692	----	0	(17F520) to (17F57F)	(17F57F)	1277824
24	49	(17F580))	(17F580) to (17F5EF)	(17F5F0) to (19212F)	4788	----	0	(192130) to (19219F)	(19219F)	1352896
25	50	(1921A0)	(1921A0) to 19220F)	(192210) to (1A536F)	4886	----	0	(1A5370) to (1A53DF)	(1A53DF)	1429504
26	51	(1A53E0)	(1A53E0) to (1A544F)	(1A5450) to (1B8BCF)	4984	----	0	(1B8BD0) to (1B8C3F)	(1B8C3F)	1507680
27	52	(1B8C40)	(1B8C40) to (1B8CAF)	(1B8CB0) to (1CCA4F)	5082	----	0	(1CCA50) to (1CCABF)	(1CCABF)	1587424
28	53	(1CCAC0)	(1CCAC0) to (1CCB2F)	(1CCB30) to (1E0EEF)	5180	----	0	(1E0EF0) to (1E0F5F)	(1E0F5F)	1668736
29	54	(1E0F60)	(1E0F60) to (1E0FCF)	(1E0FD0) to (1F59AF)	5278	----	0	(1F59B0) to (1F5A1F)	(1F5A1F)	1751616
30	55	(1F5A20)	(1F5A20) to (1F5A8F)	(1F5A90) to (20AA8F)	5376	----	0	(20AA90) to (20AAFF)	(20AAFF)	1836064

Not for Resale

© ISO/IEC 2004 – All rights reserved

--`,,`-`-`,,`,,`,`,,`---

31	56	(20AB00)	(20AB00) to (20AB6F)	(20AB70) to (22018F)	5474	----	0	(220190) to (2201FF)	(2201FF)	1922080
32	57	(220200)	(220200) to (22027F)	(220280) to (235E9F)	5570	----	0	(235EA0) to (235F1F)	(235F1F)	2009664
33	58	(235F20)	(235F20) to (235F9F)	(235FA0) to (24C1DF)	5668	----	0	(24C1E0) to (24C25F)	(24C25F)	2098784
34	59	(24C260)	(24C260) to (24C2DF)	(24C2E0) to (265F5F) See 16.3.4	6600-M	---- See 16.3.4	M	--------	(265F5F)	2189472
Total					**143442 -M**		**800 +M**			

© ISO/IEC 2004 All rights reserved
Copyright International Organization for Standardization
Reproduced by IHS under license with ISO
No reproduction or networking permitted without license from IHS
Not for Resale

Copyright International Organization for Standardization
Reproduced by IHS under license with ISO
No reproduction or networking permitted without license from IHS
Not for Resale

Table 11 - Structure of the Group for 80 mm disk

Zone	Number of Sectors per track	Sector number of the first sector of the Zone	Starting Guard Track Zone Sector No. of the first and last sectors	Group: User Area Sector Numbers	Group: User Area Number of blocks	Group: Spare Area Sector Numbers	Group: Spare Area Numbers of blocks	Ending Guard Track Zone Sector No. of the first and last sectors	Sector number of the last sector of Zone	LSN of the 1st sector in the Zone
0	25	(031000)	--------	(032400) to (0398DF)	1870	(031000) to (0323FF)	320	(0398E0) to (03991F)	(03991F)	0
1	26	(039920)	(039920) to (03995F)	(039960) to (04381F)	2540	----	0	(043820) to (04385F)	(04385F)	29920
2	27	(043860)	(043860) to (04389F)	(0438A0) to (04DD7F)	2638	----	0	(04DD80) to (04DDBF)	(04DDBF)	70560
3	28	(04DDC0)	(04DDC0) to (04DDFF)	(04DE00) to (0588FF)	2736	----	0	(058900) to (05893F)	(05893F)	112768
4	29	(058940)	(058940) to (05897F)	(058980) to (063A9F)	2834	----	0	(063AA0) to (063ADF)	(063ADF)	156544
5	30	(063AE0)	(063AE0) to (063B1F)	(063B20) to (06F25F)	2932	----	0	(06F260) to (06F29F)	(06F29F)	201888
6	31	(06F2A0)	(06F2A0) to (06F2DF)	(06F2E0) to (07B03F)	3030	----	0	(07B040) to (07B07F)	(07B07F)	248800
7	32	(07B080)	(07B080) to (07B0BF)	(07B0C0) to (08743F)	3128	----	0	(087440) to (08747F)	(08747F)	297280
8	33	(087480)	(087480) to (0874CF)	(0874D0) to (093E4F)	3224	----	0	(093E50) to (093E9F)	(093E9F)	347328
9	34	(093EA0)	(093EA0) to (093EEF)	(093EF0) to (0A0E8F)	3322	----	0	(0A0E90) to (0A0EDF)	(0A0EDF)	398912
10	35	(0A0EE0)	(0A0EE0) to (0A0F2F)	(0A0F30) to (0AE4EF)	3420	----	0	(0AE4F0) to (0AE53F)	(0AE53F)	452064
11	36	(0AE540)	(0AE540) to (0AE58F)	(0AE590) to (0BC16F)	3518	----	0	(0BC170) to (0BC1BF)	(0BC1BF)	506784
12	37	(0BC1C0)	(0BC1C0) to (0BC20F)	(0BC210) to (0CA40F)	3616	----	0	(0CA410) to (0CA45F)	(0CA45F)	563072
13	38	(24C260)	(0CA460) to (0CA4AF)	(0CA4B0) to (0E121F) See 16.3.4	5847-M	---- See 16.3.4	M	--------	(0E121F)	620928
Total					**44655-M**		**320+M**			

16.3.4 Number of blocks in the supplementary spare area

In tables 10 and 11 the number of used blocks in the Supplementary spare area is identified by M. This number shall be a multiple *n* of 32. Each of these blocks shall consist of 16 Sectors.

120 mm disk: $M = n \times 32$, $0 \le n \le 191$ $M_{min.} = 0$ (No spare block assigned) $M_{max.} = 6112$ (All spare blocks assigned)

80 mm disk: $M = n \times 32$, $0 \le n \le 174$ $M_{min.} = 0$ (No spare block assigned) $M_{max.} = 5568$ (All spare blocks assigned)

The Sector numbers shown for Zone 34/Zone 13 correspond to $M_{min.}$. When the Supplementary spare area is assigned, the actual numbers of the last sector in the User area and the first sector in the Spare area are varied according to the number of blocks assigned for the Supplementary spare area. The Supplementary spare area is allocated at the last portion of the last Zone of the Data Zone.

© ISO/IEC 2004 – All rights reserved

16.4 Lead-out Zone

16.4.1 Structure of Lead-out Zone

The structure of the Lead-out Zone shall be as shown in figure 32.

120 mm disk	80 mm disk	120 mm disk / 80 mm disk	120 mm disk	80 mm disk
Sector No. 2 514 783	922 143	Data Zone	Sector No. (265F5F)	(0E121F)
Sector No. 2 514 784	922 144	DMA3 & DMA4 192 Sectors / 192 Sectors	Sector No. (265F60)	(0E1220)
Sector No. 2 514 976	922 336	Reserved Zone 192 Sectors / 192 Sectors	Sector No. (266020)	(0E12E0)
Sector No. 2 515 168	922 528	Guard Track Zone 1 512 Sectors / 512 Sectors	Sector No. (2660E0)	(0E13A0)
Sector No. 2 515 680	923 040	Drive Test Zone 1 792 Sectors / 1 152 Sectors	Sector No. (2662E0)	(0E15A0)
Sector No. 2 517 472	924 192	Disk Test Zone 1 792 Sectors / 896 Sectors	Sector No. (2669E0)	(0E1A20)
Sector No. 2 519 264	925 088	Guard Track Zone 2 53 488 Sectors / 24 800 Sectors	Sector No. (2670E0)	(0E1DA0)

Figure 32 - Structure of the Lead-out Zone

16.4.2 DMA 3 and DMA 4

This zone shall consist of 192 sectors. DMA 3 and DMA 4 shall be as specified in 17.1.

16.4.3 Reserved Zone

This zone shall consist of 192 sectors set to all ZEROs.

16.4.4 Guard Track Zone 1

This zone shall consist of 512 sectors. It contains grooves, lands, Header fields, Mirror fields and Recording fields. The Recording fields shall be unrecorded.

16.4.5 Drive Test Zone

This zone shall consist of 1 792 sectors in case of 120 mm disk and 1 152 sectors in case of 80 mm disk. It shall contain grooves, lands, Header fields, Mirror fields and Recording fields. This zone is intended for use by the drive. It shall be ignored in interchange.

16.4.6 Disk Test Zone

This zone shall consist of 1 792 sectors in case of 120 mm disk and 896 sectors in case of 80 mm disk. It shall contain grooves, lands, Header fields, Mirror fields and Recording fields. This zone is intended for use by the disk manufacturers. It shall be ignored in interchange.

© ISO/IEC 2004 All rights reserved
Copyright International Organization for Standardization
Reproduced by IHS under license with ISO
No reproduction or networking permitted without license from IHS
Not for Resale

16.4.7 Guard Track Zone 2

This zone shall consist of 53 488 sectors in case of 120 mm disk and 24 800 sectors in case of 80 mm disk. It contains grooves, lands, Header fields, Mirror fields and Recording fields. The Recording fields shall be unrecorded.

17 Defect management

17.1 Defect Management Areas (DMAs)

There are four Defect Management Areas (DMAs) per side on a disk. These four DMAs contain information on the structure of the Data Zone and on the defect management. The length of each DMA shall be 32 sectors (two ECC Blocks). Two of the DMAs, DMA 1 and DMA 2, shall be located near the inner diameter of the disk; the other two, DMA 3 and DMA 4, shall be located near the outer diameter of the disk. The boundaries of the DMAs are indicated in table 12 in case of 120 mm disk and in table 13 in case of 80 mm disk.

Table 12 - Locations of the DMAs on the 120 mm disk

	Sector Number of the first sector	Sector Number of the last sector	Number of blocks
DMA 1	(030F80)	(030F9F)	2
Reserved	(030FA0)	(030FBF)	2
DMA 2	(030FC0)	(030FDF)	2
Reserved	(030FE0)	(030FFF)	2
DMA 3	(265F60)	(265F7F)	2
Reserved	(265F80)	(265FBF)	4
DMA 4	(265FC0)	(265FDF)	2
Reserved	(265FE0)	(26601F)	4

Table 13 - Locations of the DMAs on the 80 mm disk

	Sector Number of the first sector	Sector Number of the last sector	Number of blocks
DMA 1	(030F80)	(030F9F)	2
Reserved	(030FA0)	(030FBF)	2
DMA 2	(030FC0)	(030FDF)	2
Reserved	(030FE0)	(030FFF)	2
DMA 3	(0E1220)	(0E123F)	2
Reserved	(0E1240)	(0E127F)	4
DMA 4	(0E1280)	(0E129F)	2
Reserved	(0E12A0)	(0E12DF)	4

DMA 1 and DMA 2 are followed by two blocks of reserved sectors. DMA 3 and DMA 4 are followed by four blocks of reserved sectors. The first ECC Block of each DMA, called the DDS/PDL block, shall contain the Disk Definition Structure (DDS) and the Primary Defect List (PDL). The second ECC Block of each DMA, called the SDL block, shall contain the Secondary Defect List (SDL). The contents of the four DMAs shall be identical.

After Initialization (see 17.8.1) of the disk, each DMA shall have the following contents.

The first sector of each DDS/PDL block shall contain the DDS.

The second sector of each DDS/PDL block shall be the first sector of the PDL.

The first sector of each SDL block shall be the first sector of the SDL.

The lengths of the PDL and SDL are determined by the number of entries in each list.

The contents of the DDS are specified in 17.2. The contents of the PDL and SDL are specified in 17.6 and 17.7.

Unused sectors in the DMAs shall be set to (FF). All reserved sectors shall be set to (00).

© ISO/IEC 2004 – All rights reserved
Copyright International Organization for Standardization
Reproduced by IHS under license with ISO
No reproduction or networking permitted without license from IHS
Not for Resale

17.2 Disk Definition Structure (DDS)

The DDS shall consist of a table with a length of one sector. The DDS specifies the formatted structure of the disk. The DDS shall be recorded in the first sector of each DMA at the end of the Formatting process.

The information on the disk structure given in table 14 and table 15 for 120 mm disk and 80 mm disk respectively, shall be recorded in each of the four DDSs.

Table 14 - Byte assignment of the Disk Definition Structure of 120 mm disk

Byte position	Contents	Number of bytes
0 to 1	DDS Identifier: (0A0A)	2
2	Reserved	1
3	Disk Certification flag	1
4 to 7	DDS/PDL Update Count	4
8 to 9	Number of Groups	2
10 to 11	Number of Zones	2
12 to 79	Reserved	68
80 to 87	Location of Primary spare area	8
88 to 91	Location of LSN0	4
92 to 255	Reserved	164
256 to 259	Start LSN for Zone 0	140
260 to 263	Start LSN for Zone 1	
…	…	
392 to 395	Start LSN for Zone 34	
396 to 2 047	Reserved	1 652

Table 15 - Byte assignment of the Disk Definition Structure of 80 mm disk

Byte position	Contents	Number of bytes
0 to 1	DDS Identifier: (0A0A)	2
2	Reserved	1
3	Disk Certification flag	1
4 to 7	DDS/PDL Update Count	4
8 to 9	Number of Groups	2
10 to 11	Number of Zones	2
12 to 79	Reserved	68
80 to 87	Location of Primary spare area	8
88 to 91	Location of LSN0	4
92 to 255	Reserved	164
256 to 259	Start LSN for Zone 0	56
260 to 263	Start LSN for Zone 1	
…	…	
308 to 311	Start LSN for Zone 13	
312 to 2 047	Reserved	1 736

Bytes 0 to 1- DDS Identifier

This 2-byte field shall be set to (0A)(0A), indicating DDS Identifier.

Byte 2- Reserved
The byte shall be set to (00).

Byte 3- Disk Certification flag
This 8-bit field shall be as shown in figure 33.

Copyright International Organization for Standardization © ISO/IEC 2004 All rights reserved
Reproduced by IHS under license with ISO
No reproduction or networking permitted without license from IHS Not for Resale

b_7	b_6	b_2	b_1	b_0
In-progress	Reserved		User certification	Disk manufacturer certification

Figure 33 - Disk Certification flag

This field shall be set as follows.

Bit b_7 shall be set to

ZERO, if Formatting has been completed,
ONE, if Formatting is in-progress.

Bits b_6 to b_2 shall be set to 00000.

Bit b_1 shall be set to

ZERO, if the disk has not been certified by a user,
ONE, if the disk has been certified by a user.

Bit b_0 shall be set to

ZERO, if the disk has not been certified by a manufacturer,
ONE, if the disk has been certified by a manufacturer.

NOTE Bit b_7 shall be set to ONE at the start of Formatting with any certification and shall be reset to ZERO at the end of Formatting.

Bytes 4 to 7 - DDS/PDL Update Count

This field shall specify the total number of the updating and rewriting operations of the DDS/PDL block. This field shall be set to 0 at the beginning of Initialization, and shall be incremented by 1 when the DDS/PDL block is updated or rewritten. A copy of this DDS/PDL Update Count shall be recorded in Bytes 16 to 19 of SDL (see 17.7).

Bytes 8 to 9 - Number of Groups

This 2-byte field shall be set to (00)(01), indicating 1 Group.

Bytes 10 to 11 - Number of Zones

This 2-byte field shall be set to (00)(23), indicating 35 Zones for 120 mm disk.

This 2-byte field shall be set to (00)(0E), indicating 14 Zones for 80 mm disk.

Bytes 12 to 79 - Reserved

These bytes shall all be set to (00).

Bytes 80 to 87 – Location of the Primary spare area

The 64-bit field shown in figure 34 shall consist of 8 bytes.

b_{63} b_{56}	b_{55} b_{32}	b_{31} b_{24}	b_{23} b_0
Reserved	Sector number of the first sector in the Primary spare area	Reserved	Sector number of the last sector in the Primary spare area

Figure 34 - Location of the Primary spare area

Bit b_{63} to b_{56} shall be set to ZEROs.

Bit b_{55} to b_{32} shall be set to (031000), indicating sector number of the first sector in the Primary spare area.

Bits b_{31} to b_{24} shall be set to ZEROs.

Copyright International Organization for Standardization
Reproduced by IHS under license with ISO
No reproduction or networking permitted without license from IHS
Not for Resale
© ISO/IEC 2004 – All rights reserved

Bit b_{23} to b_0 shall be set to (0341FF), indicating sector number of the last sector in the Primary spare area for 120 mm disk, or (0323FF), indicating sector number of the last sector in the Primary spare area for 80 mm disk.

Bytes 88 to 91 - Location of LSN0

The 32-bit field shown in figure 35 shall consist of 4 bytes.

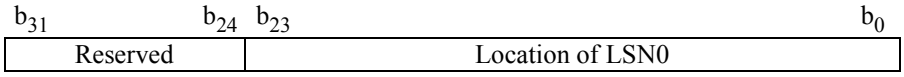

Figure 35 - Location of LSN0

Bits b_{31} to b_{24} shall be set to ZEROs.

Bit b_{23} to b_0 shall be set to the sector number of the first logical sector.

Bytes 92 to 255 - Reserved

These bytes shall all be set to (00).

Bytes 256 to 395 - Start LSN for each Zone in case of the 120 mm disk

Bytes 256 to 311 - Start LSN for each Zone in case of the 80 mm disk

The 32-bit field shown in figure 36 shall consist of 4 bytes.

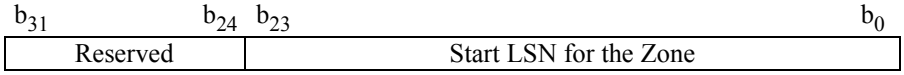

Figure 36 - Start LSN for each Zone

Bits b_{31} to b_{24} shall be set to ZEROs.

Bit b_{23} to b_0 shall be set to the start LSN for the Zone.

Bytes 396 to 2 047

Reserved, in case of the 120 mm disk and all set to (00).

Bytes 312 to 2 047

Reserved, in case of the 80 mm disk and all set to (00).

17.3 Spare sectors

Defective sectors in the Data Area shall be replaced by good sectors according to the defect management method described below, except where defective sectors are managed by specifications other than detailed in this International Standard. The disk shall be formatted before use. Formatting shall be allowed with or without Certification. The disk shall have one Primary spare area in Zone 0 and may have one expandable Supplementary spare area in Zone 34 in case of the 120 mm disk and Zone 13 in case of the 80 mm disk. The number of spare sectors in the Primary spare area shall be 12 800 in case of the 120 mm disk and 5 120 in case of the 80 mm disk. The maximum number of spare blocks in the Supplementary spare area shall be 6 112 in case of the 120 mm disk and 5 568 in case of the 80 mm disk. The number of spare Blocks of the Supplementary spare area shall be a multiple of 32. The Supplementary spare area can be expanded towards the top of Data area.

Defective sectors are handled by a Slipping Algorithm or by a Linear Replacement Algorithm, or by a Block Skipping Algorithm. The total number of entries listed in the PDL (see 17.6) and the SDL (see 17.7) shall satisfy the following requirement:

$1 \le S_{PDL} \le 15$, $1 \le S_{SDL} \le 15$ in case of 120 mm disk

$1 \le S_{PDL} \le 8$, $1 \le S_{SDL} \le 15$ in case of 80 mm disk

© ISO/IEC 2004 All rights reserved
Copyright International Organization for Standardization
Reproduced by IHS under license with ISO
No reproduction or networking permitted without license from IHS
Not for Resale

$$S_{PDL} = int\left[\frac{\left(E_{PDL} \times 4 + 4\right) + 2\,047}{2\,048}\right]$$

$$S_{SDL} = int\left[\frac{\left(E_{SDL} \times 8 + 24\right) + 2\,047}{2\,048}\right]$$

where:

int [x] is the largest integer not greater than x

- S_{PDL} is the number of sectors containing PDL entries.
- S_{SDL} is the number of sectors containing SDL entries.
- E_{PDL} is the number of PDL entries.
- E_{SDL} is the number of SDL entries.

17.4 Slipping Algorithm

The Slipping Algorithm shall be applied over the whole Data Area if defective sectors are listed in the PDL.

A defective data sector registered in PDL shall be replaced by the first good sector following the defective sector. Each defective sector causes a slip of one sector towards the top of the zone where the defective sector is located. The defective sectors in the zone may make a fraction of an ECC Block, this fraction shall be moved to just before the Guard area at the end of the zone. In case of the outermost zone, the fraction of an ECC Block shall locate at the end of the zone. As a result, the defective sectors and any ECC Block fraction in the zone cause the sectors in the previous zone to be slipped towards the top of the Data area shall not be used for recording user data. The defective sectors and the ECC Block fractions shall not be used for recording user data.

When a sector needs to be assigned an LSN, if the sector is registered in the PDL, then the sector shall be replaced in the manner described above.

The relation between Sector number and Logical Sector number when using Slipping Algorithm is shown in figure 37.

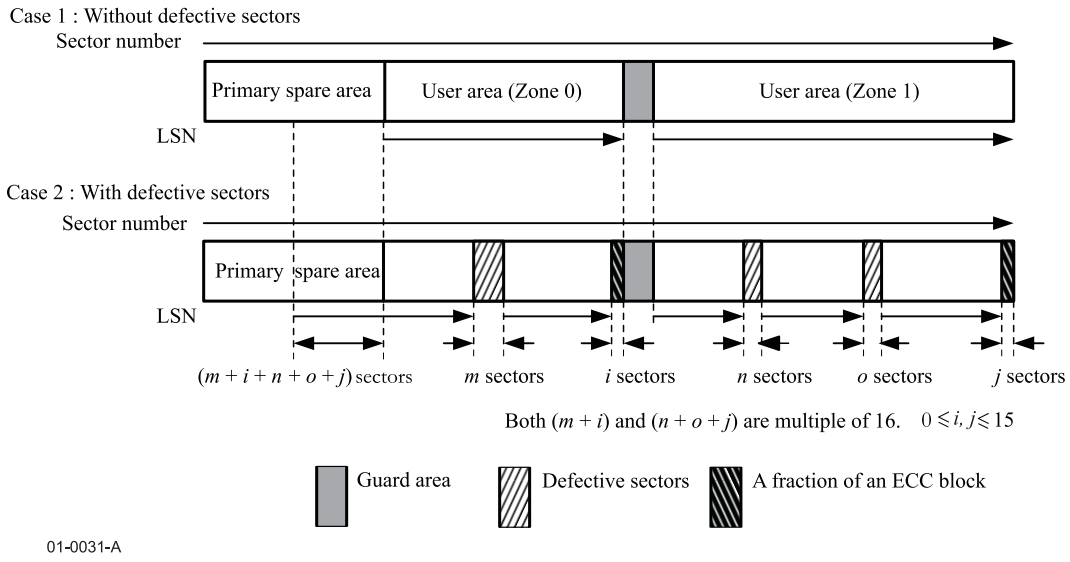

Figure 37 - Relation between Sector numbers and Logical Sector Numbers when using the Slipping Algorithm

Copyright International Organization for Standardization
Reproduced by IHS under license with ISO
No reproduction or networking permitted without license from IHS
Not for Resale
© ISO/IEC 2004 – All rights reserved

17.5 Linear Replacement Algorithm

The Linear Replacement Algorithm is used to handle defective and deteriorated sectors found after Formatting. These may be defective sectors which were not registered in the PDL during Formatting or sectors damaged by excessive overwrite cycles.

The replacement shall be performed in units of 16 sectors, called a Data block.

The defective block shall be replaced by the first available good Spare block of the Primary spare area. If there is no Spare block left in the Primary spare area, then the Primary spare area full flag in the SDL shall be set to ONE and the defective block shall be replaced by the first available good Spare block of the Supplementary spare area if it has been allocated. If there is no Spare block left in the Supplementary spare area, then the Supplementary spare area full flag in the SDL shall be set to ONE. The sector number of the first sector of the replacement block in the SDL shall point to the final replacement block if the Status of Linear Replacement (SLR; see 17.7) is set to ZERO.

The first available good Spare block of the Primary spare area is the first good block immediately before the first replacement block registered in the SDL. If there are no replacement blocks listed in the SDL, then the first available good Spare block of the Primary spare area is the first good block immediately before the first Data block.

If the Primary spare area is exhausted and a Supplementary spare area has been allocated, then the first available good Spare block is the outermost unused good block of the Supplementary spare area. The Spare area is used in descending block order. Defective sectors in the Spare area and the corresponding replacement sectors, which have been already registered in the PDL or the SDL, shall not be used as spare sectors.

If a block to be read from or written to is listed in the SDL with an SLR of ZERO, then the data shall be read from or written to the replacement Block of the Spare area pointed to by the SDL.

If a block to be read is listed in the SDL with an SLR of ONE, then the partially corrected data or padding data of 0b for all bits shall be returned.

If a block to be written to is listed in the SDL with an SLR of ONE and the field of sector number of the first sector of the replacement block is (000000) and the linear replacement of the defective block is allowed, then the data shall be written in the first available good Spare block. In this case the SLR in the SDL entry shall be changed to ZERO and the field of sector number of the first sector of the replacement block shall be set to the first sector number of the new replacement block.

If a block to be written to is listed in the SDL with an SLR of ONE and the field of sector number of the first sector of the replacement block is not (000000) and the linear replacement of the defective block is allowed, then the data shall be written in the replacement block. In this case the SLR in the SDL entry shall be changed to ZERO.

If a block to be written to is found to be defective and there is no available Spare block or the defective block is handled by the Linear Replacement Algorithm, then the defective block may be registered in the SDL with the SLR of ONE. In this case, the sector number of the first sector in the replacement block of the SDL entry shall be set to (000000).

If a Data block is found to be defective after Formatting and there is an available Spare block and the defective block is handled by the Linear Replacement Algorithm, then it shall be regarded as a defective block and it shall be listed in the SDL as a new entry with the SLR set to ZERO.

If a replacement block listed in the SDL is later found to be defective, then the direct pointer method shall be applied for a registration into the SDL. In this method, the SDL entry in which the defective replacement block has been registered shall be modified by changing the address of the replacement block from the defective one to a new one.

At the time of updating the SDL, the SDL Update Count shall be incremented by 1.

The relation between Sector number and Logical Sector number when using the Linear Replacement algorithm is shown in figure 38.

--`,`-`-`,,`,,`,`,,`---

© ISO/IEC 2004 All rights reserved

Copyright International Organization for Standardization
Reproduced by IHS under license with ISO
No reproduction or networking permitted without license from IHS
Not for Resale

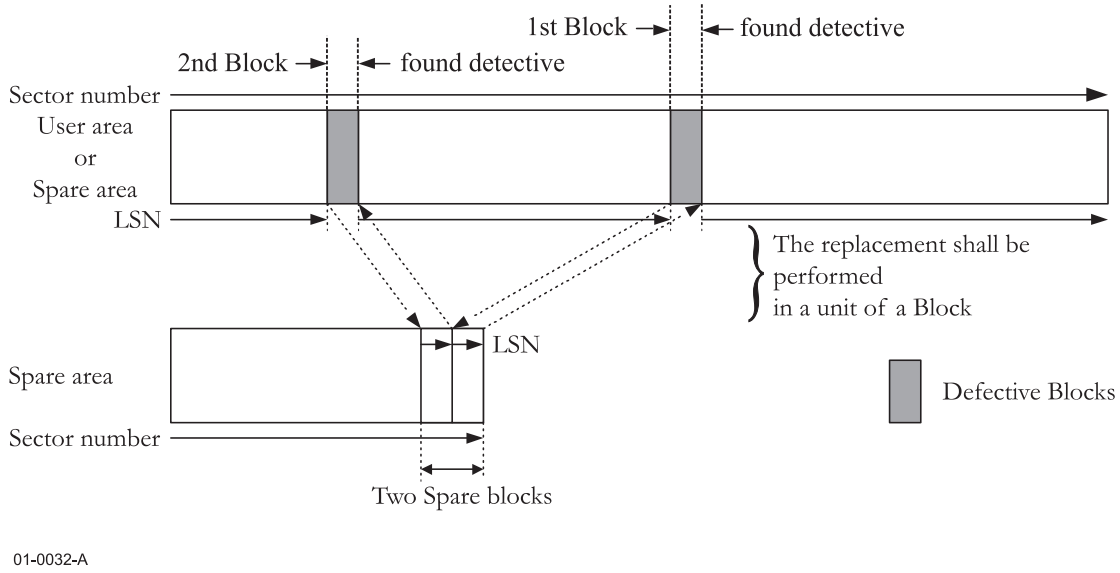

Figure 38 - Relation between Sector numbers and Logical Sector Numbers when using the Linear Replacement algorithm

17.6 Primary Defect List (PDL)

The Primary Defect List (PDL) shall always be recorded in each DDS/PDL block; even if it is empty.

A list of defective sectors may be obtained by means other than Certification of the disk.

The PDL shall contain the entries of defective sectors identified at Formatting. Each entry shall specify the Entry type and the Sector number of the defective sector. The Sector numbers shall be listed in ascending order. The PDL shall be recorded in the minimum number of sectors necessary and shall begin in Byte 0 of the first sector of the PDL. All unused bytes of the last sector of the PDL shall be set to (FF). All unused sectors in the DDS/PDL block shall be set to (FF). The information in table 16 shall be recorded in each PDL.

In the case of multiple-sector PDL, the list of entries of the defective sectors shall continue with the first byte of the second and subsequent sectors. Thus, the PDL Identifier and the number of entries of the PDL shall be present only in the first sector of the PDL.

In an empty PDL, the Number of entries in PDL (Bytes 2 and 3 of the first PDL sector) shall be set to (0000) and Bytes 4 to 2 047 shall be set to (FF).

The Entry type specifies the origin of the defective sectors:

1) Defective sectors defined by the disk manufacturer (P-list)

2) Defective sectors found during the Certification process (G1-list)

3) Defective sectors which are transferred from the SDL without Certification process (G2-list).

The P-list shall be preserved after any Formatting.

Table 16 - Contents of the PDL

Byte position	Contents	Number of bytes
0 and 1	PDL Identifier: (0001)	2
2 and 3	Number of entries in the PDL (E_{PDL})	2
4 to 7	The first PDL entry	4
8 to 11	The second PDL entry	4
---	---	---
n to *n*+3	The last PDL entry	4

$n = 4 \times E_{PDL}$

© ISO/IEC 2004 – All rights reserved
Copyright International Organization for Standardization
Reproduced by IHS under license with ISO
No reproduction or networking permitted without license from IHS
Not for Resale

Bytes 0 and 1 - PDL Identifier

This field shall be set to (0001), indicating PDL Identifier.

Bytes 2 and 3 - Number of entries in the PDL

This field shall specify the number of entries in the PDL (EPDL).

PDL entries

Each 32-bit field shall be partitioned as shown in figure 39.

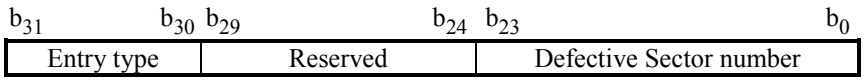

Figure 39 - PDL entry

Bits b_{31} to b_{30} shall be set to

00, indicating a P-list,
10, indicating a G1-list,
11, indicating a G2-list.

Bits b_{29} to b_{24} shall be set to ZERO.

Bits b_{23} to b_0 shall specify the Sector number of the defective sector.

17.7 Secondary Defect List (SDL)

The Secondary Defect List (SDL) shall always be recorded in each SDL block; even if it is empty.

The SDL shall contain entries which contain the sector number of the first sector of the defective ECC Blocks and the sector number of the first sector of the Spare blocks which replace them. Each entry in the SDL consists of 8 bytes, three bytes for the sector number of the first sector of the defective block, three bytes for the sector number of the first sector of its replacement block, one byte of which one bit is used for the SLR, the remaining 7bits reserved and one reserved byte.

The sector numbers of the first sector in the defective blocks shall be listed in ascending order.

The SDL shall be recorded in the minimum number of sectors necessary. All unused bytes of the last sector of the SDL shall be set to (FF). All unused sectors in the SDL block shall be set to (FF). The information shown in table 17 shall be recorded in each of the four SDLs.

If a replacement block listed in the SDL is later found to be defective, then the direct pointer method shall be applied for registration into the SDL. In this method, the SDL entry in which the defective replacement block has been registered shall be modified by changing the sector number of the first sector of the replacement block from the defective replacement block to a new one. Therefore, the number of entries in the SDL shall remain unchanged by deteriorated sectors.

In the case of a multiple-sector SDL, the list of entries shall continue with the first byte of the second and subsequent sectors. Thus, SDL Identifier, SDL Update Count, Spare Area Full flags and Number of entries in the SDL shall be present only in the first sector of the SDL.

© ISO/IEC 2004 All rights reserved

Copyright International Organization for Standardization
Reproduced by IHS under license with ISO
No reproduction or networking permitted without license from IHS
Not for Resale

Table 17 - Contents of the SDL (continued)

Byte position	Contents	Number of bytes
0 and 1	SDL Identifier: (0002)	2
2 and 3	Reserved	2
4 to 7	SDL Update Count	4
8 to 11	Sector number of Supplementary spare area	4
12 to 15	Total number of logical sectors	4
16 to 19	DDS/PDL Update Count	4
20	Spare Area Full flags	1
21	Reserved	1
22 and 23	Number of entries in SDL (E_{SDL})	2
24 to 31	The first SDL entry	8
---	---	
m to *m*+7	The last SDL entry	8

$m = (8 \times E_{SDL}) + 16$

Bytes 0 and 1 - SDL Identifier

This field shall be set to (0002), indicating SDL Identifier

Bytes 2 and 3 - Reserved

All bytes shall be set to (00).

Bytes 4 to 7 - SDL Update Count

This field shall specify the total number of the updating operations for the SDL block, in binary notation. This field shall be set to 0 at the Initialization (see 17.8.1), and shall be incremented by 1 when the contents of the SDL are updated.

Bytes 8 to 11 - Sector number of the Supplementary spare area

This field shall specify the first sector number of the Supplementary spare area. All bytes of this field shall be set to (00) when the Supplementary spare area is not allocated.

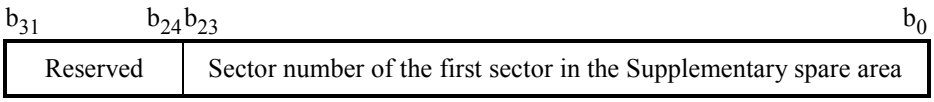

Figure 40 - Sector number of the Supplementary spare area

Bits b_{31} to b_{24} shall be set to (00).

Bits b_{23} to b_0 shall specify the sector number of the first sector in the Supplementary spare area.

The Supplementary spare area shall begin from the first sector of the ECC Block.

Bytes 12 to 15 - Total number of logical sectors

This field shall specify the total number of the logical sectors in the User Area.

Bytes 16 to 19 - DDS/PDL Update Count

This field shall specify the total number of the updating and rewriting operations for DDS/PDL block. This field shall be set to 0 at the beginning of Initialization, and shall be incremented by 1 when the DDS/PDL block is updated or rewritten. All the DDS/PDL blocks and the SDL blocks shall have the identical Update Count value after completion of Formatting.

Byte 20 - Spare Area Full flags

These flags shall indicate the availability of Spare blocks in the corresponding Spare area.

© ISO/IEC 2004 – All rights reserved
Copyright International Organization for Standardization
Reproduced by IHS under license with ISO
No reproduction or networking permitted without license from IHS
Not for Resale

The full flag of the Supplementary spare area shall be set to ONE if a Supplementary spare area has not been allocated or if the Supplementary spare area, which has already been allocated, is exhausted. The full flag of the Supplementary spare area shall be cleared to ZERO when the Supplementary spare area is allocated or expanded.

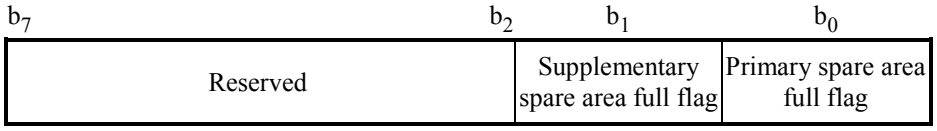

Figure 41 - Spare Area Full flags

Bits b_7 to b_2 shall be set to ZERO.

Bit b_1 shall be set to

ONE, if no Spare block is left in the Supplementary spare area, or Supplementary spare area is not allocated,

ZERO, if Spare blocks are left in the Supplementary spare area.

Bit b_0 shall be set to

ONE, if no Spare block is left in the Primary spare area,

ZERO, if Spare blocks are left in the Primary spare area.

Byte 21 - Reserved

This byte shall be set to (00).

Bytes 22 and 23 - Number of entries in the SDL

These bytes shall specify the number of entries in the SDL (E_{SDL}).

SDL entry

This 64-bit field shall be partitioned as shown in figure 42.

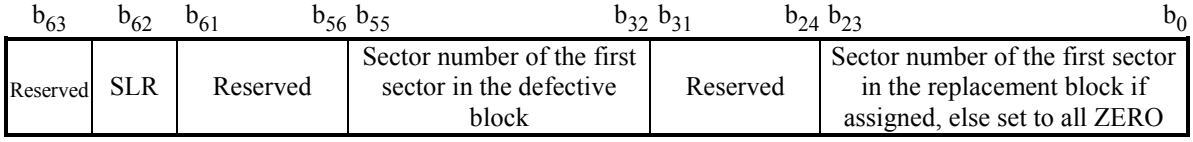

Figure 42 - SDL entry

Bit b_{63} shall be set to ZERO.

Bit b_{62} shall be set to

ZERO, if the defective block has been replaced with a spare block,

ONE, if the defective block has not been replaced.

Bits b_{61} to b_{56} shall be set to ZERO.

Bits b_{55} to b_{32} shall specify the sector number of the first sector of the defective block.

Bits b_{31} to b_{24} shall be set to ZERO.

Bits b_{23} to b_0 shall specify the sector number of the first sector of the replacement block if assigned,

shall be set to all ZEROs if the replacement block is not assigned.

-`-`-,,`,,`,`,,`---

© ISO/IEC 2004 All rights reserved

Copyright International Organization for Standardization
Reproduced by IHS under license with ISO
No reproduction or networking permitted without license from IHS
Not for Resale

17.8 Formatting of the disk

Disks shall be formatted before their use. If there is no DMA recorded on the disk before the Formatting process, then the process shall be regarded as Initialization. If there are DMAs recorded on the disk before the Formatting process, then the process shall be regarded as Re-initialization.

After any Formatting of the disk, the four DMAs shall be recorded. The Data Zone shall consist of a single Group, see 16.3.3. The Group shall contain a User Area and a Spare Area. The sectors in the Spare Area can be used as replacements for defective sectors. Formatting is performed by either Initialization or Re-initialization. Either may include Certification whereby defective sectors are identified and skipped.

All DDS parameters shall be recorded in the four DDS sectors. The PDL and SDL shall be recorded in the four DMAs. All reserved blocks following each DMA shall be set to (00). The requirements for the recording of the PDLs and SDLs are shown in table 16 and table 17 respectively.

After Formatting, any Data blocks or Spare blocks which may have been allocated as a result of the Slipping Algorithm (see 17.4), shall be in either of the following states.

a) A Data block or Spare block containing a set of 16 Physical Data Units that comprise a complete ECC Block as specified in 13.3. The Physical Data Unit may have been written before the Re-initialization.

b) A Data block or Spare block with all sectors unwritten.

c) A Data block or Spare block containing a data field number in the range (000000) to (00000F), which may have been written during the certification process.

After Formatting, three types of entries may exist in the PDL, namely, P-list, G1-list and G2-list. The types are identified by the Entry type of every entry (see table 16). The SDL may also contain entries.

When the disk is certified, the Certification shall be applied to the sectors in the User Area and the Spare Area.

The method of Certification is not stated by this International Standard. It may involve writing and reading the sectors in the User Area and the Spare Area.

Defective sectors in User Area and Spare Area found during Certification shall be listed in the G1-list of the PDL and shall be handled by the Slipping Algorithm. Defective sectors shall not be used for reading or writing. Guideline for replacing defective sectors is given in annex M.

If the Formatting process involves certification or other data writing processes, then the data field number shall be between (000000) to (00000F). The In-process field of the Disk certification flag shall be set to ONE during the certification process. This procedure allows the system to detect the occurrence of a failure that may have occurred during a previous Formatting involving the certification or other data writing processes.

Spare blocks are also allocated at formatting, but the LSN is not assigned. A Spare block is used to replace a defective Data block or to substitute a Spare block. A Spare block is allocated in a Spare Area at Formatting.

17.8.1 Initialization

If there are no DMA recorded on the disk, the disk shall require initialization. In initialization, the DDS/PDL Update Count and the SDL Update Count shall be set to 0. In the case of Initialization by the disk manufacturer, the defective sectors found during Initialization shall be listed in the P-list of the PDL. In the case of Initialization by other than the disk manufacturer, the defective sectors found during Initialization shall be listed in the G1 list of the PDL. In both cases, not only the defective sector in the User Area, but also defective sectors in the Spare Area shall be listed in the PDL.

A certification process may be applied during Initialization. If a certification process is applied by the disk manufacturer, then the Disk Manufacturer Certification field in the Disk Certification flag shall be set to ONE. If the certification process is applied by other than the disk manufacturer, then the User certification field in the Disk Certification flag shall be set to ONE.

If the number of defective sectors to be registered in the PDL exceeds the criteria of 17.3 during certification, then those defective sectors which cannot be registered in the PDL shall be registered in the SDL. If no Spare blocks are left in the Primary spare area during initialization, then the Primary spare area full flag shall be set to 1b. If there are no available Spare blocks on the disk during certification, then the initialization shall be regarded as an error.

© ISO/IEC 2004 – All rights reserved
Copyright International Organization for Standardization
Reproduced by IHS under license with ISO
No reproduction or networking permitted without license from IHS
Not for Resale

17.8.2 Re-initialization

If DMAs are already recorded on the disk before formatting, then the Formatting is regarded as re-initialization.

For the re-initialization process, the P-list, the DDS/PDL Update Count and SDL Update Count shall be preserved.

The re-initialization process may involve processes of

1) Applying a certification to exclude the G1-list from the PDL, and/or to register the new PDL entries found during certification into G1-list of the PDL,

2) Transforming SDL entries into G2-list of the PDL,

3) Excluding G2 list from the PDL and excluding SDL entries.

In process 1), the G2 list of PDL shall always be excluded. The defective sectors found during Certification shall be registered in the G1-list of the PDL. This process does not always require the disk Certification with writing operation. The modification of G1-list of PDL entries with the Entry type of 10 will result in the ECC Block mis-alignment which is against the required condition of 17.8, i.e. state a), b) or c). Therefore, the system that formats the disk shall conform to the required condition of 17.8, i.e. state a), b) or c). If the Certification process is applied by other than the disk manufacturer, then the User Certification field in the Disk Certification flag shall be set to ONE.

In process 2), the G1-list of the PDL shall be preserved and all of the 16 sectors of a defective block listed in the SDL shall be registered in the G2-list of the PDL as 16 PDL entries.

Process 3) allows to revert the PDL entries quickly to the latest certified values.

If the number of defective sectors to be registered in the PDL exceeds the criteria of 17.3, then those defective sectors which cannot be registered in the PDL shall be registered in the SDL. If no Spare blocks are left in the Primary spare area during re-initialization, then the Primary spare area full flag shall be set to ONE. If there are no available Spare blocks on the disc during certification, then the re-initialization shall be regarded as an error.

When sectors are listed in the PDL, then these sectors shall be skipped for use even if both of the User Certification field and Disk manufacturer Certification field is set to ZERO. This process is same as the process specified in 17.4.

17.8.3 Data field number resulting from Initialization and Re-initialization

a) Initialization with Certification

1) The Data Field Numbers of the sectors of an unused block shall be in the range (000000) to (00000F).

2) When such an unused block is used, then the Data Field Numbers of the sectors shall equal {LSN + (031000)}.

b) Initialization without Certification

1) The Data Field Numbers of the sectors of an unused block are unwritten.

2) When an unused block is used, then the Data Field Numbers of the sectors shall equal {LSN + (031000)}.

c) Re-initialization of a disk initialized with Certification

1) Re-initialization with Certification

1.1) The Data Field Numbers of the sectors of an unused block shall be in the range (000000) to (00000F).

1.2) When such an unused block is used, then the Data Field Numbers of the sectors shall equal {LSN + (031000)}.

2) Re-initialization without Certification

2.1) The Data Field Number of the sectors of an unused block shall either be a multiple of (10) for the first sector and the following sectors shall be consecutively numbered with a block, or these Data Field Numbers shall be in the range (000000) to (00000F).

© ISO/IEC 2004 All rights reserved

Copyright International Organization for Standardization
Reproduced by IHS under license with ISO
No reproduction or networking permitted without license from IHS
Not for Resale

2.2) When such an unused block is used, then the Data Field Numbers of the sectors shall equal {LSN + (031000)}.

d) Re-initialization of a disk not certified

1) Re-initialization with Certification

1.1) The Data Field Numbers of the sectors of an unused block shall be in the range (000000) to (00000F).

1.2) When such an unused block is used, then the Data Field Numbers of the sectors shall equal {LSN + (031000)}.

2) Re-initialization without Certification

2.1) The Data Field Number of the sectors of an unused block shall either start with a multiple of (10) for the first sector and the following sectors shall be consecutively numbered within a block, or these Data Field Numbers shall be unwritten.

2.2) When such an unused block is used, then the Data Field Numbers of the sectors shall equal {LSN + (031000)}.

e) Re-initialization of an already re-initialized disk

1) Disk obtained by the procedure of either c) 1), c) 2) or d) 1) shall be handled as described in c).

2) Disks obtained from the procedure of d) 2) shall be handled as described in d).

17.9 Write procedure

When writing data, a defective sector listed in the PDL shall be skipped, and the data shall be written in the next good data sector according to the Slipping Algorithm.

If a block to be written to is found to be defective, then the defective block may be replaced by the first available good spare block, according to the Linear Replacement Algorithm, or may be skipped.

If a block to be written to is listed in the SDL, then the Block may be replaced according to the Linear Replacement Algorithm, or may be skipped.

17.10 Read procedure

17.10.1 Read procedure

When the data is read, a defective sector listed in the PDL shall be skipped, and the data shall be read from the next data sector according to the Slipping Algorithm.

If a Data block to be read is listed in the SDL with an SLR of ZERO, then the data shall be read from a replacement block in the Spare Area pointed by the SDL according to the Linear Replacement Algorithm.

If a Data block to be read is listed in the SDL with an SLR of ONE, then the partially corrected data or padding data of 0 for all bits shall be returned.

If a Block to be read is found to be defective and correctable, and the disk is not write-inhibited, then the defective block may be replaced by the first available good spare block according to the Linear Replacement Algorithm.

17.10.2 Blank ECC Block

A blank ECC Block is a block which meets either of the following two conditions:

1) The Data field number in each sector of the ECC Block is between (000000) and (00000F).

2) The Recording field in each sector is unwritten.

A blank ECC Block contains no user data.

© ISO/IEC 2004 – All rights reserved
Copyright International Organization for Standardization
Reproduced by IHS under license with ISO
No reproduction or networking permitted without license from IHS
Not for Resale

Section 4 - Characteristics of embossed information

18 Method of testing

The format of the embossed information on the disk is defined in section 3. Clause 19 to 21 specify the requirements for the signals from lands and grooves, Header fields and Embossed data, as obtained when using the measuring Optical Head in 9.1.

Clause 19 to 21 specify only the average quality of the embossed information. Local deviations from the specified values, called defects, can cause tracking errors, erroneous Header fields or errors in the Data fields.

18.1 Environment

All signals in clauses 19 to 21 shall be within their specified ranges with the disk in the range of allowed environmental conditions for use defined in 8.1.2.

18.2 Reference Drive

All signals specified in clauses 19 to 21 shall be measured in the indicated channels of the reference drive. The drive shall have the following characteristics for the purpose of these tests.

18.2.1 Optics and mechanics

The focused optical beam shall have the properties defined in 9.1.

18.2.2 18.2.2 Read power

The Read power is the optical power incident on the entrance surface of the disk and used for reading the information. The Read power shall be given in the Control Data Zone (see 16.2.6).

The actual power shall be within 10 % of the given power.

18.2.3 Read channels

The drive shall have a Read channel 1, in which the total amount of light in the exit pupil of the objective lens is measured. The read signal from the Read channel 1 is not equalized except when measuring jitter.

The drive shall have a Read channel 2, in which the differential output of the quadrant photo detectors is measured. The read signal from the Read channel 2 is not equalized except when measuring jitter (see 9.4).

18.2.4 Tracking channel

The drive shall have a Tracking channel in which the sum output and differential output of the quadrant photo detectors are measured.

18.2.5 Tracking

During the measurement of the signals, the axial tracking error between the focus of the optical beam and Recording layer shall not exceed

$e_{max.}$ (axial) = 0,23 µm,

and the radial tracking error between the focus of the optical beam and the centre of a track shall not exceed

$e_{max.}$ (radial) = 0,022 µm.

18.3 Definition of signals

All signals are linearly related to currents through a photo-detector and are therefore linearly related to the optical power falling on the detector.

© ISO/IEC 2004 All rights reserved

Copyright International Organization for Standardization
Reproduced by IHS under license with ISO
No reproduction or networking permitted without license from IHS
Not for Resale

The signals from the two halves of the split photo-detector are indicated by I_1 and I_2. The split photo-detector separator shall be parallel to the projected track axis. The signals in the Tracking channel are referenced to the signal $(I_1 + I_2)_a$, which is the sum of the signals obtained from the unrecorded, ungrooved area in the Information Zone (see 16.1), such as the Mirror field in a sector.

The signal in Read channel 1 is the sum of I_1 and I_2 referenced to I_0, which is the signal $(I_1 + I_2)$ in Read channel 1 from the unrecorded and ungrooved area in the Information Zone, such as the Mirror field in a sector.

The signal in Read channel 2 is the difference of I_1 and I_2 referenced to I_0.

Figures 43 to 50 show the signals specified in clauses 19 to 21.

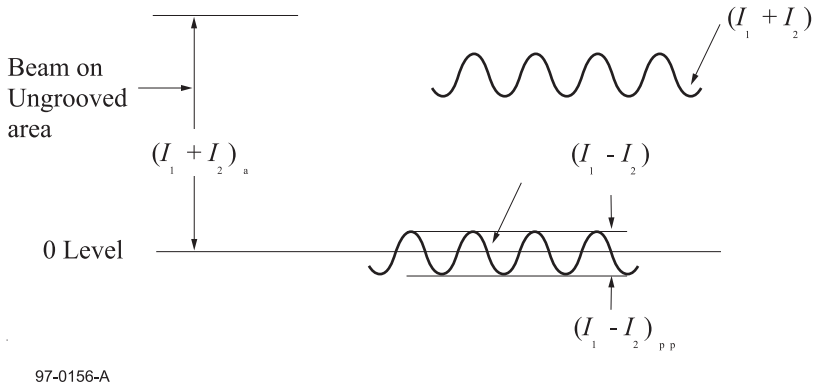

Figure 43 - Signals from lands and grooves in the Tracking channel

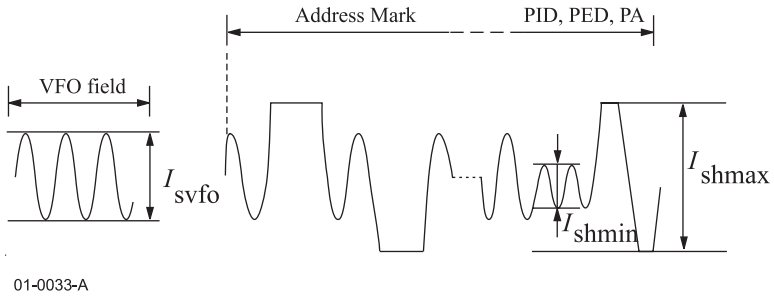

Figure 44a - Signals from Header field in Read channel 1

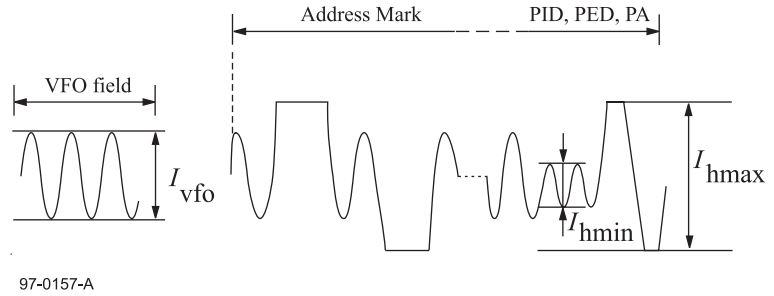

Figure 44b - Signals from Header field in Read channel 2

© ISO/IEC 2004 – All rights reserved
Copyright International Organization for Standardization
Reproduced by IHS under license with ISO
No reproduction or networking permitted without license from IHS
Not for Resale

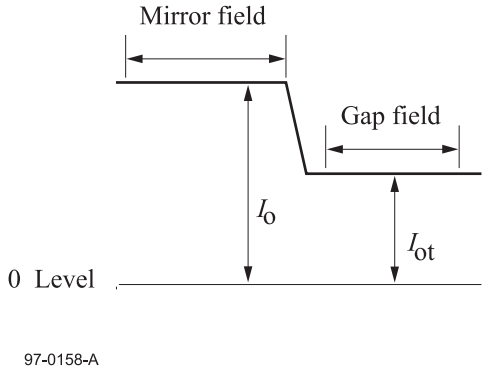

Figure 45 - Signals from Mirror field and Gap field in Read channel 1

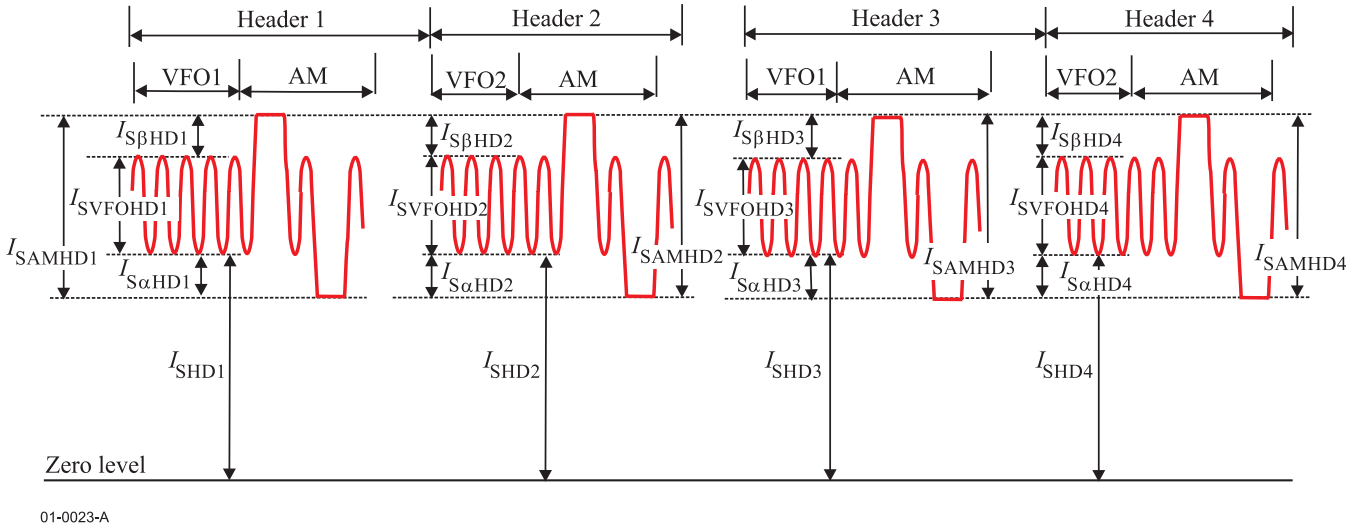

Figure 46 - Signals from Header 1, Header 2, Header 3 and Header 4 in Read channel 1

© ISO/IEC 2004 All rights reserved
Copyright International Organization for Standardization
Reproduced by IHS under license with ISO
No reproduction or networking permitted without license from IHS
Not for Resale

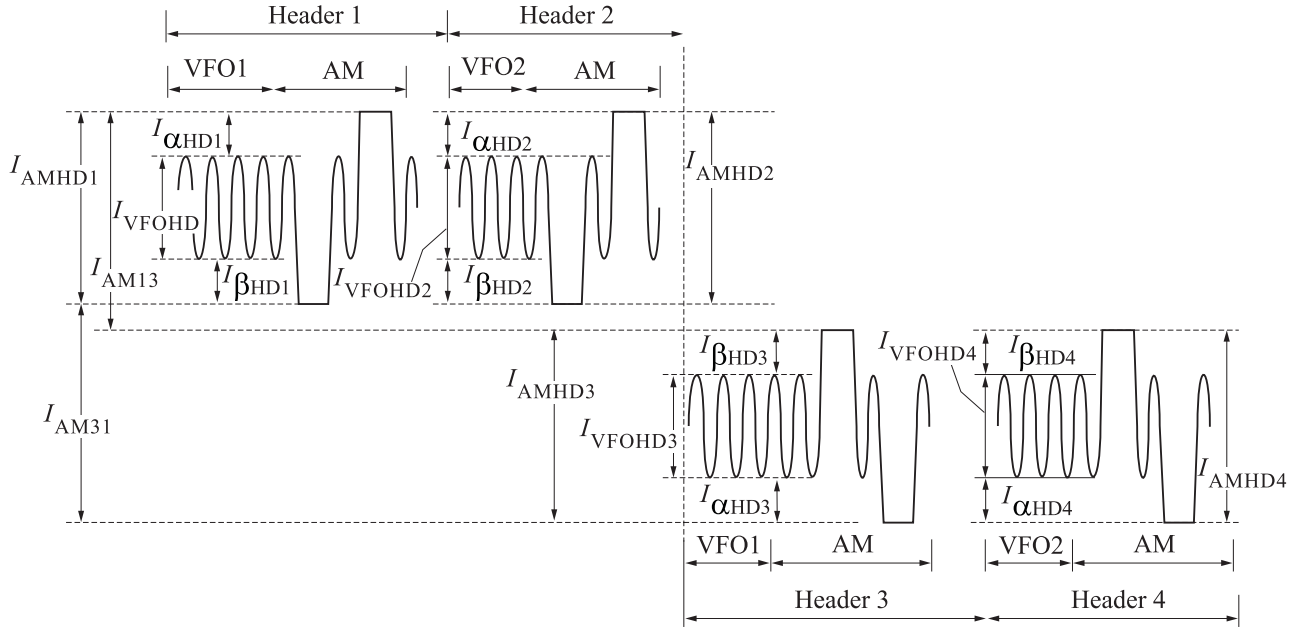

(a) on groove sector

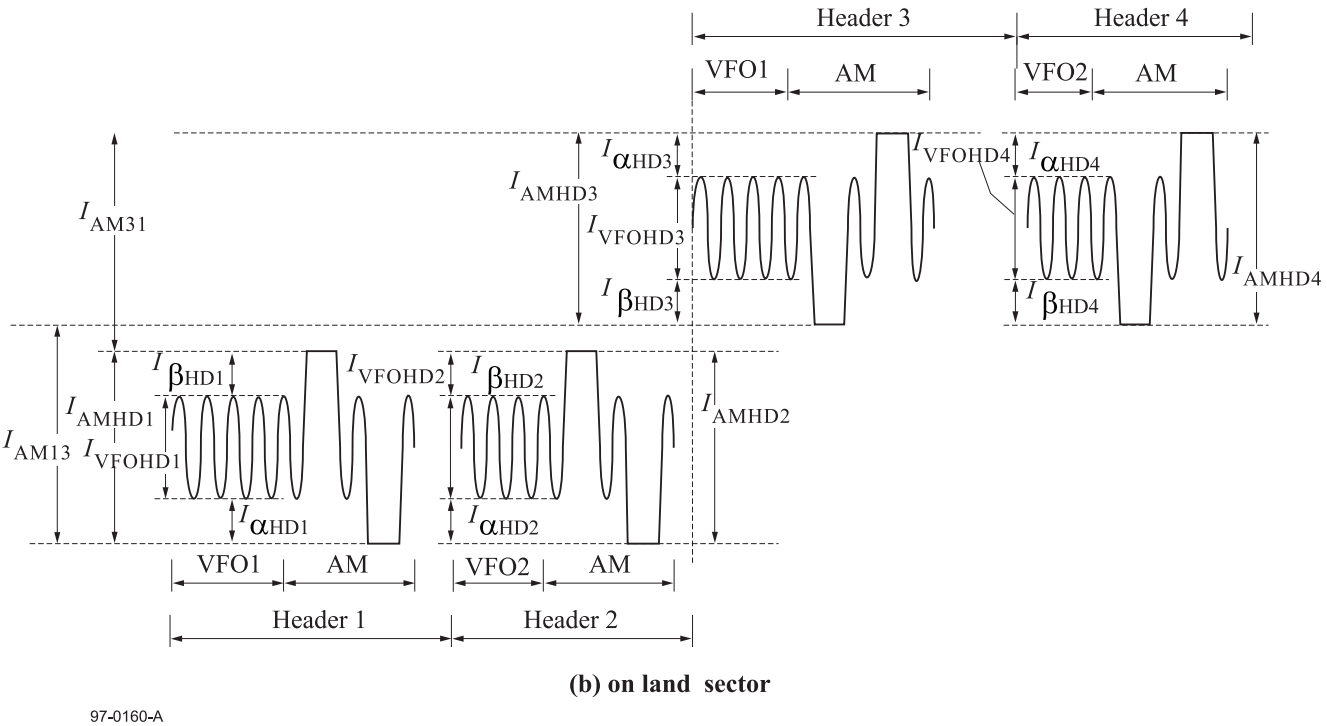

(b) on land sector

97-0160-A

Figure 47 - Signals from Header 1, Header 2, Header 3 and Header 4 in Read channel 2

Copyright International Organization for Standardization
Reproduced by IHS under license with ISO
No reproduction or networking permitted without license from IHS
Not for Resale
© ISO/IEC 2004 – All rights reserved

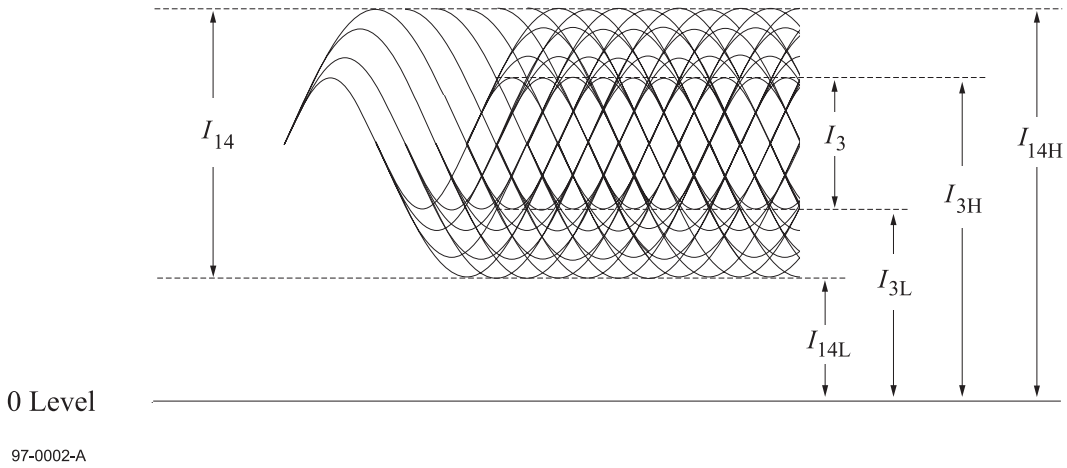

Figure 48 - Signals in Read channel 1

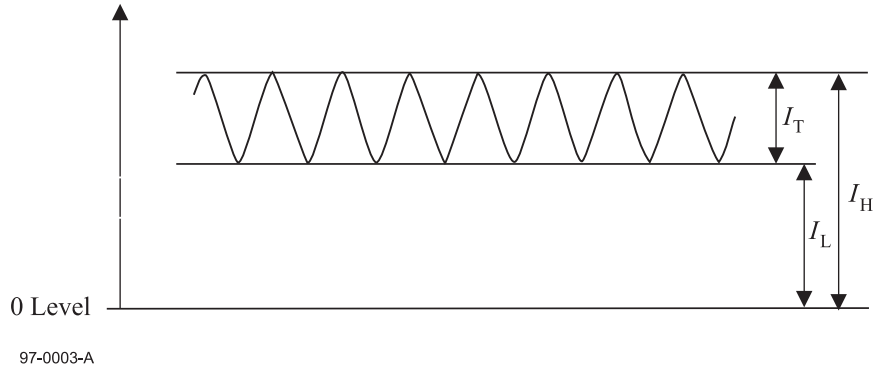

Figure 49 - Track-crossing signal from Embossed Area

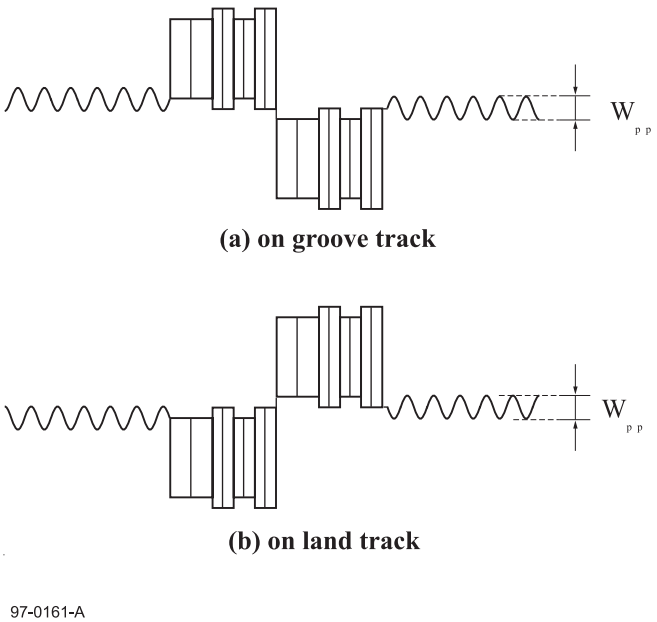

Figure 50 - Schematic representation of the signals from a groove or a land in Read channel 2

© ISO/IEC 2004 All rights reserved
Copyright International Organization for Standardization
Reproduced by IHS under license with ISO
No reproduction or networking permitted without license from IHS
Not for Resale

19 Signals from lands and grooves

The signals (I_1+I_2) and (I_1-I_2) in the Tracking channel shall be low pass filtered with a cut-off frequency of 30 kHz. The low pass filter is a 1st-order filter. This condition shall not apply to the measurement of $(I_1+I_2)_a$.

The shape of the grooves shall be such that the following requirements for circular polarization are met.

19.1 Push-pull signal

The push-pull signal is the difference signal (I_1-I_2) in the Tracking channel, when the light beam crosses the tracks in both the written and unwritten Recording fields of Rewritable Area. The peak-to-peak value of the push-pull signal shall meet the following requirements:

$$0{,}35 \le \frac{(I_1 - I_2)_{pp}}{(I_1 + I_2)_a} \le 1{,}05$$

19.2 Divided push-pull signal

The first term of the divided push-pull signal is the peak-to-peak amplitude derived from the instantaneous level of (I_1-I_2) when the light beam crosses the tracks in both of the written and unwritten Recording fields of the Rewritable Area divided by the instantaneous level of (I_1+I_2) when the light beam crosses these tracks.

The second term of the divided push-pull signal is the ratio of the minimum peak-to-peak amplitude derived from the instantaneous level of (I_1-I_2) divided by the instantaneous level of (I_1+I_2) when the light beam crosses the tracks in both of the written and unwritten Recording fields of the Rewritable Area to the maximum peak-to-peak amplitude derived from the instantaneous level of (I_1-I_2) divided by the instantaneous level of (I_1+I_2) when the light beam crosses these tracks.

The tracking servo shall operate in open-loop mode during this measurement.

The first term shall meet the following requirements:

$$1{,}10 \le \left[\frac{(I_1 - I_2)}{(I_1 + I_2)}\right]_{pp} \le 1{,}65$$

The second term shall satisfy:

$$\frac{\left\{\left[\frac{I_1 - I_2}{I_1 + I_2}\right]_{pp}\right\}_{min.}}{\left\{\left[\frac{I_1 - I_2}{I_1 + I_2}\right]_{pp}\right\}_{max.}} \ge 0{,}70$$

19.3 On-track signal

The on-track signal I_{ot} is the signal in Read channel 1 when the light beam is following a groove or a land in the Recording field of the Rewritable Area. The on-track signal I_{ot} measured in the unwritten Gap field shall meet the following requirements:

a) On groove track

$$0{,}56 \le \frac{I_{ot}}{I_0} \le 0{,}80$$

© ISO/IEC 2004 – All rights reserved
Copyright International Organization for Standardization
Reproduced by IHS under license with ISO
No reproduction or networking permitted without license from IHS
Not for Resale

b) On land track

$$0{,}56 \leq \frac{I_{ot}}{I_0} \leq 0{,}80$$

In addition the condition

$$0{,}9 \leq \frac{(I_{ot})_{groove}}{(I_{ot})_{land}} \leq 1{,}1$$

shall be satisfied, on groove tracks as well as on land tracks.

19.4 Phase depth

The phase depth of the grooves shall be less than 90°.

19.5 Wobble signal

The wobble signal is the signal in Read channel 2 when the light beam is following a groove or a land in the Recording fields of the Rewritable Area.

The narrow-band signal-to-noise ratio of the wobble signal shall meet the following requirements.

a) On groove track

Narrow-band signal-to-noise ratio shall be at least 34 dB (a resolution bandwidth of 10 kHz).

b) On land track

Narrow-band signal-to-noise ratio shall be at least 34 dB (a resolution bandwidth of 10 kHz).

The wobble signal amplitude W_{pp} shall meet the following requirements when measured in the unrecorded area:

a) On groove track

$$0{,}05 \leq \frac{W_{pp}}{(I_1 - I_2)_{pp}} \leq 0{,}10$$

b) On land track

$$0{,}05 \leq \frac{W_{pp}}{(I_1 - I_2)_{pp}} \leq 0{,}10$$

$(I_1 - I_2)_{pp}$ is the peak to peak amplitude of $(I_1 - I_2)$ in the Tracking channel when the light beam crosses the tracks in an unwritten recordable Recording field.

20 Signals from Header fields

The signals obtained from the Header fields in the Rewritable Area shall be measured by both Read channel 1 and Read channel 2 in the Reference Drive.

The signals from the Header field are defined as the peak-to-peak value of the signal in Read channel 1 and Read channel 2.

The jitter shall be measured for each of the groove tracks and the land tracks according to the following procedure:

– Read the signal from approximately 8 bytes of the VFO 1 field preceding the Address Mark to the PA 2 field in the Header 1 field and Header 2 field under the conditions specified in 18.2.

– Read the signal from approximately 8 bytes of the VFO 1 field preceding the Address Mark to the PA 2 field in the Header 3 field and Header 4 field under the conditions specified in 18.2.

© ISO/IEC 2004 All rights reserved

Copyright International Organization for Standardization
Reproduced by IHS under license with ISO
No reproduction or networking permitted without license from IHS
Not for Resale

The jitter is the standard deviation σ of the time variation of digitized data passed through the Read channel 1 specified in 18.2.3. The jitter of the leading edge and trailing edge is measured relative to the PLL clock and normalized by the Channel bit clock period.

The jitter shall not exceed 9,0 % of the Channel bit clock period, when measured according to annex F.

20.1 VFO 1 and VFO 2

The signal I_{svfo} from the marks in the VFO 1 and VFO 2 fields shall meet the following requirements:

$$\frac{I_{svfo}}{I_0} \geq 0{,}14$$

In addition the condition

$$\frac{I_{svfo}}{I_{shmax.}} \geq 0{,}37$$

shall be satisfied within each Header field, where $I_{shmax.}$ is the maximum signal from marks of the Header fields defined in clause 20.

The signal I_{vfo} from the marks in the VFO 1 and VFO 2 fields shall meet the following requirements:

$$\frac{I_{vfo}}{I_0} \geq 0{,}14$$

In addition the condition

$$\frac{I_{vfo}}{I_{hmax.}} \geq 0{,}37$$

shall be satisfied within each Header field, where $I_{hmax.}$ is the maximum signal from marks of the Header fields defined in clause 20.

20.2 Address Mark, PID, PED and Postamble

The signal I_{sh} from marks in the Address Mark, PID, PED and Postamble fields shall meet the following requirements:

$$\frac{I_{shmin.}}{I_0} \geq 0{,}043$$

$$\frac{I_{shmax.}}{I_0} \geq 0{,}23$$

$$\frac{I_{shmin.}}{I_{shmax.}} \geq 0{,}17$$

The last requirement applies over any Header field. The signals $I_{shmin.}$ and $I_{shmax.}$ are the signals with minimum and maximum amplitude in each of Header 1, Header 2, Header 3 and Header 4 in a sector.

The signal I_h from marks in the Address Mark, PID, PED and Postamble fields shall meet the following requirements:

© ISO/IEC 2004 – All rights reserved
Copyright International Organization for Standardization
Reproduced by IHS under license with ISO
No reproduction or networking permitted without license from IHS
Not for Resale

$$\frac{I_{\text{hmin.}}}{I_{\text{hmax.}}} \geq 0{,}10$$

The last requirement applies over any Header field. The signals $I_{\text{hmin.}}$ and $I_{\text{hmax.}}$ are the signals with minimum and maximum amplitude in each of Header 1, Header 2, Header 3 and Header 4 in a sector.

20.3 Signals from Header 1, Header 2, Header 3 and Header 4

Signals from Header 1, Header 2, Header 3 and Header 4 in Read channel 2 may be used to detect the boundary of the land track and groove track, and may be used to detect the radial tilt. Signals from Header 1, Header 2, Header 3 and Header 4 in Read channel 1 may be used to compensate for the tracking offset.

The signals from Header 1, Header 2, Header 3 and Header 4 of groove sector in Read channel 2 are shown in figure 42. The signals from Header 1, Header 2, Header 3 and Header 4 of land sector in Read channel 2 are shown in figure 47.

The signals from Header 1 and Header 2 of groove sector have opposite polarity to those of land sector in Read channel 2. The signals from Header 3 and Header 4 of groove sector have opposite polarity to those of land sector in Read channel 2.

The signals from Header 1, Header 2, Header 3 and Header 4 in Read channel 2 shall meet the following requirements:

$$0{,}9 \leq \frac{I_{\text{AMHD2}}}{I_{\text{AMHD1}}} \leq 1{,}1$$

$$0{,}9 \leq \frac{I_{\text{AMHD4}}}{I_{\text{AMHD3}}} \leq 1{,}1$$

$$\frac{I_{\text{AM13}}}{I_{\text{AMHD1}}} \geq 0{,}8$$

$$\frac{I_{\text{AM31}}}{I_{\text{AMHD3}}} \geq 0{,}8$$

The following requirements shall also be met:

$$-0{,}10 \leq (I_{\beta\text{HD1}} - I_{\alpha\text{HD1}}) / 2I_{\text{AMHD1}} \leq 0{,}10$$

$$-0{,}10 \leq (I_{\beta\text{HD2}} - I_{\alpha\text{HD2}}) / 2I_{\text{AMHD2}} \leq 0{,}10$$

$$-0{,}10 \leq (I_{\beta\text{HD3}} - I_{\alpha\text{HD3}}) / 2I_{\text{AMHD3}} \leq 0{,}10$$

$$-0{,}10 \leq (I_{\beta\text{HD4}} - I_{\alpha\text{HD4}}) / 2I_{\text{AMHD4}} \leq 0{,}10$$

The signals from Header 1, Header 2, Header 3 and Header 4 in Read channel 1 shall meet the following requirements (see figure 46).

$$|(I_{\text{SVFOHD1}} - I_{\text{SVFOHD3}}) / (I_{\text{SVFOHD1}} + I_{\text{SVFOHD3}})| < 0{,}03\text{: at } I_1\text{-}I_2=0$$

$$0{,}04 \leq |\Delta[(I_{\text{SVFOHD1}} - I_{\text{SVFOHD3}}) / (I_{\text{SVFOHD1}} + I_{\text{SVFOHD3}})]|\text{: at } -0{,}05\ \mu\text{m radial offset}$$

$$0{,}9 \leq I_{\text{SAMHD2}} / I_{\text{SAMHD1}} \leq 1{,}1$$

$$0{,}9 \leq I_{\text{SAMHD4}} / I_{\text{SAMHD3}} \leq 1{,}1$$

The value of asymmetry shall satisfy the following specifications.

$$-0{,}10 \leq (I_{\text{S}\beta\text{HD1}} - I_{\text{S}\alpha\text{HD1}}) / 2I_{\text{SAMHD1}} \leq 0{,}10$$

$$-0{,}10 \leq (I_{\text{S}\beta\text{HD2}} - I_{\text{S}\alpha\text{HD2}}) / 2I_{\text{SAMHD2}} \leq 0{,}10$$

© ISO/IEC 2004 All rights reserved

Copyright International Organization for Standardization
Reproduced by IHS under license with ISO
No reproduction or networking permitted without license from IHS
Not for Resale

$-0,10 \leq (I_{S\beta HD3} - I_{S\alpha HD3}) / 2I_{SAMHD3} \leq 0,10$

$-0,10 \leq (I_{S\beta HD4} - I_{S\alpha HD4}) / 2I_{SAMHD4} \leq 0,10$

20.4 Phase depth

The phase depth of the embossed pits shall be less than 90°.

21 Signals from Embossed Area

21.1 High Frequency (HF) signal

The HF signal is the signal from marks in the Embossed Area measured in the Read channel 1. See figure 48 and annex F.

21.1.1 Modulated amplitude

The peak to peak value generated by the largest length of mark in figure 48 is I_{14} and the peak value corresponding to HF signal before high-pass filtering is I_{14H}. The 0 Level is the no reflection level. The peak-to-peak value of the shortest wavelength is I_3.

The above parameters shall satisfy the following specifications:

$I_{14} / I_{14H} \geq 0,35$

$I_3 / I_{14} \geq 0,35$

$(I_{14H\ max.} - I_{14H\ min.}) / I_{14H\ max.}$

Within one disk: 0,33 max.

Within one revolution: 0,15 max.

Where $I_{Hmax.}$ and $I_{Hmin.}$ are the maximum and the minimum values of I_{14H} within a disk or a revolution.

21.1.2 Signal asymmetry

The value of asymmetry shall satisfy the following specifications:

$-0,05 \leq [(I_{14H} + I_{14L}) - (I_{3H} + I_{3L})] / 2\,(I_{14H} - I_{14L}) \leq 0,15$

21.1.3 Cross-track signal

Cross-track signal is derived from the HF signal which is low pass filtered with a cut-off frequency of 30 kHz when the light beam crosses the tracks. The low pass filter is a 1st-order filter. See figure 49.

The signal shall satisfy the following specifications:

$I_T = I_H - I_L$

$I_T / I_H = 0,10$ min.

21.2 Jitter

The jitter is the standard deviation σ of the time variation of the binarized data passed through the Read Channel 1 specified in 18.2.3. The jitter of the leading and the trailing edge is measured relative to the PLL clock and normalized by the Channel bit clock period.

The jitter shall not exceed 8,0 % of the Channel bit clock period, when measured according to annex F.

21.3 Servo signal

Output currents of each quadrant photo detector element of the Optical Head are I_a, I_b, I_c and I_d. See figure 51.

© ISO/IEC 2004 – All rights reserved
Copyright International Organization for Standardization
Reproduced by IHS under license with ISO
No reproduction or networking permitted without license from IHS
Not for Resale

21.3.1 Differential phase tracking error signal

The differential phase tracking error signal is the triangular signal derived from the phase difference between diagonal pairs of detector elements [phase(I_a+I_c) - phase(I_b+I_d)], when the light beam crosses the tracks. See figure 52 and 53. The tracking error signal is low pass filtered with a cut-off frequency of 30 kHz. See annex C.

Amplitude

The tracking error signal at the positive zero crossing shall satisfy

$0,5 \leq \overline{\Delta}\, t/T \leq 1,1$, at 0,10 µm radial offset.

$\overline{\Delta}\, t$ denotes the average time difference coming from the phase difference between diagonal pairs of detector elements and T denotes the Channel bit clock period.

Asymmetry

The value of asymmetry shall satisfy the following specifications:

$| (T_1 - T_2) / (T_1 + T_2) | = 0,2$ max.

21.3.2 Tangential push-pull signal

Tangential push-pull signal is derived from the instantaneous level of the differential output [(I_a + I_d) - (I_b + I_c)], when the light beam is following a track. See figure 52.

The above parameters shall satisfy

$[(I_a + I_d) - (I_b + I_c)]pp / I_{14} = 1,2$ max.

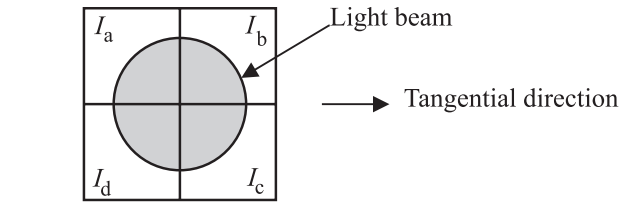

Figure 51 - Quadrant photo detector

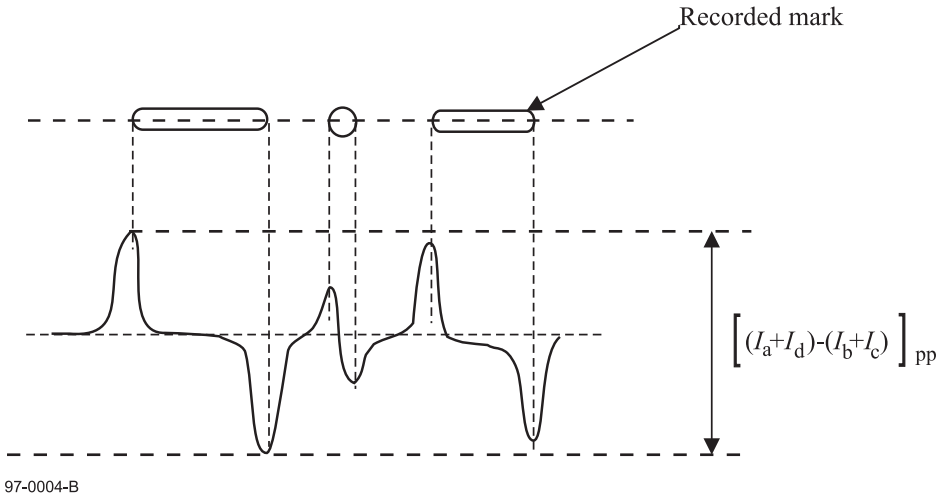

Figure 52 - Tangential push-pull signal

© ISO/IEC 2004 All rights reserved

Copyright International Organization for Standardization
Reproduced by IHS under license with ISO
No reproduction or networking permitted without license from IHS
Not for Resale

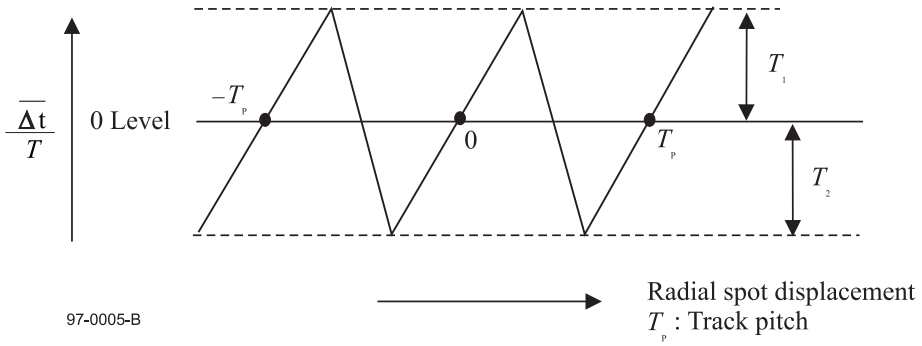

Figure 53 - Differential phase tracking error signal

Copyright International Organization for Standardization
Reproduced by IHS under license with ISO
No reproduction or networking permitted without license from IHS
Not for Resale
© ISO/IEC 2004 – All rights reserved

Section 5 - Characteristics of the recording layer

22 Method of testing

Clause 23 describes a series of tests to assess the phase change recording properties of the Recording layer, as used for writing data. The tests shall be performed in the Recording field of the sectors in the Rewritable Area. The write and read operations necessary for the tests shall be made on the same Reference Drive.

22.1 Environment

All signals in clause 23 shall be within their specified ranges with the disk in the operating environment defined in 8.1.2.

22.2 Reference Drive

The overwrite and read tests described in clause 23 shall be measured in Read channel 1 of the Reference Drive. The drive shall have the following characteristics for the purpose of these tests.

22.2.1 Optics and mechanics

The focused optical beam shall have the properties defined in 9.1. The disk shall rotate as specified in 9.3.

22.2.2 Read power

The Read power is the optical power incident on the entrance surface of the disk and used for reading the information. The Read power shall be given in Control Data Zone (see 16.2.6). The actual power shall be within 10 % of the given power.

22.2.3 Read channel

The Reference Drive shall have Read channel 1 which can detect marks and spaces in the Recording layer. The read signal from the Read channel 1 is not equalized except when measuring jitter. The threshold level for binarizing the read signal shall be adjusted to minimize the effects of mark and space size changes due to overwriting. Refer to annex F.

The drive shall have a Read channel 1, in which the total amount of light in the exit pupil of the objective lens is measured. See 9.4.

22.2.4 Tracking

During the measurement of the signals, the focus of the optical beam shall follow the tracks as specified in 18.2.5.

22.3 Write conditions

Marks and spaces are overwritten on the disk by pulses of Peak Power, Bias Power 1, Bias Power 2 and Bias Power 3.

Marks are overwritten on the disk by irradiating write pulses which are modulated between Peak Power and Bias Power 2.

Spaces are overwritten on the disk by irradiating Bias Power 1.

22.3.1 Write pulse

The Write pulse consists of a sequence of light-pulses given in figure H.1 of annex H.

A Write pulse for a 3T mark consists of a single pulse followed by a pulse of Bias power 2. The Write pulse for a 4T mark consists of a first pulse and a last pulse followed by a pulse of Bias power 2. The Write pulse for marks

© ISO/IEC 2004 All rights reserved

Copyright International Organization for Standardization
Reproduced by IHS under license with ISO
No reproduction or networking permitted without license from IHS
Not for Resale

longer than a 4T mark consists of a first pulse, a multi-pulse chain and a last pulse followed by a pulse of Bias power 2. T is the channel clock period.

a) Write pulse structure for a 3T mark

The single pulse starts at T_{SFP} after the leading edge of the NRZI signal and ends at $2T–T_{ELP}$ before the trailing edge of the NRZI signal. The duration of the single pulse is $1T–T_{SFP}+T_{ELP}$. T_{SFP} and T_{ELP} shall be given in the Control data Zone. See 16.2.6.

The duration of the pulse of Bias power 2 following the single pulse is T_{LC}. T_{LC} shall be given in the Control data Zone. See 16.2.6.

b) Write pulse structure for marks longer than 3T

The first pulse starts at T_{SFP} after the leading edge of the NRZI signal and ends at T_{EFP} after the leading edge of the NRZI signal. The duration of the first pulse is T_{FP}, which is equal to $T_{EFP}–T_{SFP}$. T_{SFP}, T_{EFP} and T_{FP} shall be given in the Control data Zone. See 16.2.6.

The write pulses corresponding to 5T to 14T have a multi-pulse chain. The multi-pulse chain consists of repetitive pulses of duration T_{MP} and period T. It starts at 2T after the leading edge of the NRZI signal.

The last pulse of the multi-pulse chain starts at 3T before the trailing edge of the NRZI signal. T_{MP} shall be given in the Control data Zone. See 16.2.6.

The last pulse starts at $2T–T_{SLP}$ before the trailing edge of the NRZI signal and ends at $2T–T_{ELP}$ before the trailing edge of the NRZI signal. The duration of the last pulse is T_{LP}, which is equal to $T_{ELP} –T_{SLP}$. T_{SLP}, T_{ELP} and T_{LP} shall be given in the Control data Zone. See 16.2.6.

The duration of the Bias power 2 pulse following the last pulse is T_{LC}. T_{LC} shall be given in the Control data Zone. See 16.2.6.

T_{FP}, T_{MP}, T_{LP} and T_{LC} are the full width, half maximum durations. The full width, half maximum duration of each light-pulse is defined in figure H.2 of annex H. The rising time T_r and the falling time T_f shall each be less than or equal to 5,0 ns. The difference between T_r and T_f shall be less than or equal to 1,0 ns.

T_{SFP}, T_{EFP}, T_{FP}, T_{SLP}, T_{ELP}, T_{LP}, T_{MP} and T_{LC} are given in the Control data zone in units of nano seconds and shall have value ranges as follows:

T_{SFP} shall be at least -0,5T, and shall not exceed 1,0T.
T_{ELP} shall be at least 0,0T, and shall not exceed 1,5T.
T_{EFP} shall at least 1,0T, and shall not exceed 2,5T.
T_{SLP} shall at least -1,0T, and shall not exceed 0,5T.
T_{FP} shall be at least 1,0T, and shall not exceed 2,0T.
T_{LP} shall be at least 0,5T, and shall not exceed 1,5T.
T_{LC} shall at least 1,0T, and shall not exceed 2,5T.
T_{MP} is set to 0,5T.

These parameter ranges have further limitation, as specified in 22.3.4 and should be controlled to an accuracy of ± 0,5 ns.

If the first pulse and the multi-pulse have an overlap in their peak power durations, then the composite peak power duration shall become the consecutive sum total of these two peak power durations. If the first pulse and the last pulse have an overlap in their peak power durations, then the composite peak power duration shall become the consecutive sum total of these two peak power durations. If the last pulse of the multiple pulse train and the last pulse have an overlap in their peak power durations, then the composite peak power duration shall become the consecutive sum total of these two peak power durations.

22.3.2 Write power

The write power has four levels; the Peak power, the Bias power 1, Bias power 2 and Bias power 3, which are the optical powers incident on the entrance surface of the disk and used for writing marks and spaces.

The Peak power, the Bias power 1, the Bias power 2 and the Bias power 3 shall be given in the Control data Zone (see 16.2.6) and the Bias Power 2 shall be less than or equal to Bias power 1. Bias power 3 shall be less than or equal to Bias power 1. The maximum Peak power shall not exceed 14 mW. The maximum Bias power 1 shall not exceed 10 mW.

© ISO/IEC 2004 – All rights reserved
Copyright International Organization for Standardization
Reproduced by IHS under license with ISO
No reproduction or networking permitted without license from IHS
Not for Resale

The average Peak power of single pulse, first pulse and last pulse shall satisfy the following requirement:

| Average Peak power – given Peak power | ≤ 5 % of given Peak power

The average Bias power 1 and the average Bias power 2 shall satisfy the following requirements:

| Average Bias power 1 – given Bias power 1 | ≤ 5 % of given Bias power 1

| Average Bias power 2 – given Bias power 2 | ≤ 5 % of given Bias power 1

The mean power of the multi-pulse chain is the mean power of the instantaneous power within the measuring period.

The measuring period shall only contain all of the multi-pulse chain and shall be multiple of T.

The mean power of the multi-pulse chain shall satisfy the following requirement:

| The mean power of the multiple pulse chain – (given Peak power + given Bias power 3) / 2 | shall not exceed 5 % of (given Peak power + given Bias power 3) / 2.

The instantaneous power is the instantaneous level of the actual power.

The average power is the mean power of the instantaneous power within the given power range.

The power ranges for the average powers shall satisfy the following requirement:

Average Peak power: | Actual power – given Peak power | ≤ 10 % of given Peak power
Average Bias power 1: | Actual power – given Bias power 1 | ≤ 10 % of given Bias power1
Average Bias power 2: | Actual power – given Bias power 2 | ≤ 10 % of given Peak power
Average Bias power 3: | Actual power – given Bias power 3 | ≤ 10 % of given Peak power

The time range for measuring the average power shall not exceed the duration of each pulse.

The instantaneous power shall satisfy the following requirements:

| Instantaneous Peak power – given Peak power | ≤ 10 % of given Peak power
| Instantaneous Bias power 1 – given Bias power 1 | ≤ 10 % of given Bias power1
| Instantaneous Bias power 2 – given Bias power 2| ≤ 10 % of given Peak power
| Instantaneous Bias power 3 – given Bias power 3| ≤ 10 % of given Peak power

The definition of the average Peak power, the average Bias power 1, the average Bias power 2 and the mean power of multi-pulse chain is shown in figure H.3 of annex H.

22.3.3 Adaptive write control table

To precisely control the mark edge position, the timings of the first pulse, the last pulse and the single pulse can be modulated. For basic write pulse definition, see 22.3.1.

Mark lengths of the NRZI signal are categorized to M3, M4, M5 and M6. Mark length of M3, M4, M5 and M6 are 3T, 4T, 5T and longer than 5T, respectively.

Space lengths of the NRZI signal adjacent to and before the mark are categorized to LS3, LS4, LS5 and LS6. Space lengths of LS3, LS4, LS5 and LS6 are 3T, 4T, 5T and longer than 5T, respectively.

Space lengths of the NRZI signal adjacent to and after the mark are categorized to TS3, TS4, TS5 and TS6. Space lengths of TS3,TS4, TS5 and TS6 are 3T, 4T, 5T and longer than 5T, respectively.

T_{SFP} can be modulated as a function of the category of the mark length of the NRZI signal and the category of the space length of the NRZI signal adjacent to and before the mark. Therefore, T_{SFP} can have sixteen kinds of values as follows:

T_{SFP} (M3, LS3)	T_{SFP} (M4, LS3)	T_{SFP} (M5, LS3)	T_{SFP} (M6, LS3)
T_{SFP} (M3, LS4)	T_{SFP} (M4, LS4)	T_{SFP} (M5, LS4)	T_{SFP} (M6, LS4)
T_{SFP} (M3, LS5)	T_{SFP} (M4, LS5)	T_{SFP} (M5, LS5)	T_{SFP} (M6, LS5)
T_{SFP} (M3, LS6)	T_{SFP} (M4, LS6)	T_{SFP} (M5, LS6)	T_{SFP} (M6, LS6)

T_{SFP} (M, LS) means the T_{SFP} value when the category of the mark length of the NRZI signal is M and the category of the space length of the NRZI signal adjacent to and before the mark is LS.

These sixteen T_{SFP} values shall be given in the Control data Zone. See 16.2.6.

© ISO/IEC 2004 All rights reserved

Copyright International Organization for Standardization
Reproduced by IHS under license with ISO
No reproduction or networking permitted without license from IHS
Not for Resale

T_{ELP} can be modulated as a function of the category of the mark length of the NRZI signal and the category of the space length of the NRZI signal adjacent to and after the mark. Therefore, T_{ELP} can have sixteen kinds of values as follows:

T_{ELP} (M3, TS3) T_{ELP} (M4, TS3) T_{ELP} (M5, TS3) T_{ELP} (M6, TS3)
T_{ELP} (M3, TS4) T_{ELP} (M4, TS4) T_{ELP} (M5, TS4) T_{ELP} (M6, TS4)
T_{ELP} (M3, TS5) T_{ELP} (M4, TS5) T_{ELP} (M5, TS5) T_{ELP} (M6, TS5)
T_{ELP} (M3, TS6) T_{ELP} (M4, TS6) T_{ELP} (M5, TS6) T_{ELP} (M6, TS6)

T_{ELP} (M, TS) means the T_{ELP} value when the category of the mark length of the NRZI signal is M and the category of the space length of the NRZI signal adjacent to and after the mark is TS.

These sixteen T_{ELP} values shall be given in the Control data Zone. See 16.2.6.

T_{SFP} values can be represented as the letters from **a** to **p** as a function of mark length and previous space length. T_{ELP} can be represented as the letters from **q** to **af** as a function of mark length and trailing space length. The T_{SFP} table and the T_{ELP} table are shown in table 18.

Table 18 - Adaptive write control table structure

T_{SFP} Table		**Mark length**			
		3T	4T	5T	>5T
Leading space length	3T	a	b	c	d
	4T	e	f	g	h
	5T	i	j	k	l
	>5T	m	n	o	p

T_{ELP} Table		**Mark length**			
		3T	4T	5T	>5T
Trailing space length	3T	q	r	s	t
	4T	u	v	w	x
	5T	y	x	aa	ab
	>5T	ac	ad	ae	af

22.3.4 Adaptive write pulse control mode

There are two modes, case 1 and case 2, for adaptive write pulse control. For basic write pulse definition, refer to 22.3.1.

a) Case 1

For the first pulse, T_{EFP} and T_{SFP} in the Control data zone shall be applied. T_{FP} in the Control data zone shall be ignored. $T_{EFP} - T_{SFP}$ shall be equal to or more than 1,0T and shall be less than or equal to 2,0T.

For the last pulse, T_{SLP} and T_{ELP} in the Control data zone shall be applied. T_{LP} in the Control data zone shall be ignored. $T_{ELP} - T_{SLP}$ shall be equal to or more than 0,5T and shall be less than or equal to 1,5T.

Value ranges of T_{EFP}, T_{SFP}, $T_{EFP} - T_{SFP}$, T_{SLP}, T_{ELP} and $T_{ELP} - T_{SLP}$ are summarized in table H.1 in annex H.

b) Case 2

For the first pulse, T_{FP} and T_{SFP} in the Control data zone shall be applied. T_{EFP} in the Control data zone shall be ignored. $T_{SFP} + T_{FP}$ shall be equal to or more than 1,0T and shall be less than or equal to 2,5T.

For the last pulse, T_{LP} and T_{ELP} in the Control data zone shall be applied. T_{SLP} in the Control data zone shall be ignored. $T_{ELP} - T_{LP}$ shall be equal to or more than –1,0T and shall be equal to or less than 0,5T.

Value ranges of T_{FP}, T_{SFP}, $T_{SFP} + T_{FP}$, T_{LP}, T_{ELP} and $T_{ELP} - T_{LP}$ are summarized in table H.1 in annex H.

The selection of case 1 or case 2 shall be given in the Control data Zone. See 16.2.6.

22.4 Definition of signals

The signals in the Read channel are linearly related to the sum of the currents through the split photo-detector, and are therefore linearly related to the optical power falling on the detector.

© ISO/IEC 2004 – All rights reserved
Copyright International Organization for Standardization
Reproduced by IHS under license with ISO
No reproduction or networking permitted without license from IHS
Not for Resale

23 Write characteristics

23.1 Modulated amplitude and Signal asymmetry

The Modulated amplitude and Signal asymmetry are measured in the Read channel 1. See figure 48 and annex F.

The test on modulation depth and Signal asymmetry shall be carried out on each of a groove track and a land track according to the following procedure.

Overwrite random data in the Recording fields 10 times. The write condition shall be as specified in 22.3.

Read the Recording fields under the conditions specified in 22.2.

The peak to peak value generated by the longest length 14T of mark and space in figure 48 is I_{14} and the peak value corresponding to the read signal is I_{14H}. The 0 level is the signal level obtained from the measuring device when no disc is inserted. The peak-to-peak value of the shortest length 3T of mark and space is I_3.

The above parameters shall satisfy

I_{14} / I_{14H} : 0,40 min.

I_3 / I_{14} : 0,15 min.

$(I_{14max.} - I_{14min.}) / I_{14max.} = 0,10$ max.

Where $I_{14max.}$ and $I_{14min.}$ are the maximum and the minimum values of I_{14} within a sector.

The maximum value of $(I_{14Hmax.} - I_{14Hmin.}) / I_{14Hmax.}$ shall be:

Within a disk : 0,33 max.
Within a track : 0,15 max.

Where $I_{14Hmax.}$ and $I_{14Hmin.}$ are the maximum and minimum values of I_{14H} and I_{ot} within a disk or a track.

The value of asymmetry shall satisfy

$-0,05 \leq [(I_{14H} + I_{14L}) - (I_{3H} + I_{3L})] / 2 (I_{14H} - I_{14L}) \leq 0,15$.

23.2 Jitter

The test on jitter shall be carried out in the Recording fields of any group of five adjacent tracks, designated (m-2), (m-1), m, (m+1), (m+2). When track m is a groove, tracks of (m-2), (m+2) are grooves and tracks of (m-1), (m+1) are lands. On the other hand, when track m is a land, tracks of (m-2), (m+2) are lands and tracks of (m-1), (m+1) are grooves.

The Jitter shall be measured for each of the groove and land tracks according to the following procedure:

Overwrite random data in the Recording fields of all five tracks 10 times each. The write condition shall be specified in 22.3.

Read the data from PS field, Data field and PA 3 field, at least, of track m under the conditions specified in 22.2.

The jitter is the standard deviation σ of the time variation of digitized data passed through the Read channel 1 specified in 18.2.3 The jitter of the leading and trailing edge is measured relative to the PLL clock and normalized by the Channel bit clock period.

The jitter shall be less than 9,0 % of the Channel bit clock period.

© ISO/IEC 2004 All rights reserved

Copyright International Organization for Standardization
Reproduced by IHS under license with ISO
No reproduction or networking permitted without license from IHS
Not for Resale

Section 6 - Characteristics of user data

24 Method of testing

The user-written data may have been written by any drive in any environment. The read tests shall be performed on the Reference Drive.

All signals shall be within their specified ranges in the operating environment defined in 8.1.2. It is recommended that, before testing, the entrance surface of the disk shall be cleaned according to the instructions of the manufacturer of the disk.

© ISO/IEC 2004 – All rights reserved
Copyright International Organization for Standardization
Reproduced by IHS under license with ISO
No reproduction or networking permitted without license from IHS
Not for Resale

Annex A
(normative)

Measurement of the angular deviation α

The angular deviation is the angle α formed by an incident beam perpendicular to the Reference Plane P with the reflected beam (figure A.1).

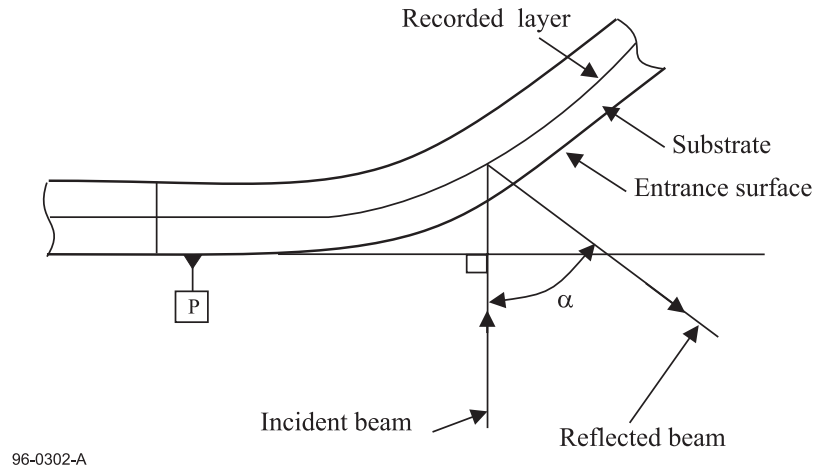

Figure A.1 - Angular deviation α

For measuring the angular deviation α, the disk shall be clamped between two concentric rings covering most of the Clamping Zone. The top clamping area shall have the same diameters as the bottom clamping area.

$$d_{in} = 22{,}3 \text{ mm} \begin{matrix} +\ 0{,}5 \text{ mm} \\ -\ 0{,}0 \text{ mm} \end{matrix}$$

$$d_{out} = 32{,}7 \text{ mm} \begin{matrix} +\ 0{,}0 \text{ mm} \\ -\ 0{,}5 \text{ mm} \end{matrix}$$

The total clamping force shall be F_1 = 2,0 N ± 0,5 N. In order to prevent warping of the disk under the moment of force generated by the clamping force and the chucking force F_2 exerted on the rim of the centre hole of the disk, F_2 shall not exceed 0,5 N (figure A.2). This measurement shall be made under the conditions of 8.1.1.).

© ISO/IEC 2004 All rights reserved
Copyright International Organization for Standardization
Reproduced by IHS under license with ISO
No reproduction or networking permitted without license from IHS
Not for Resale

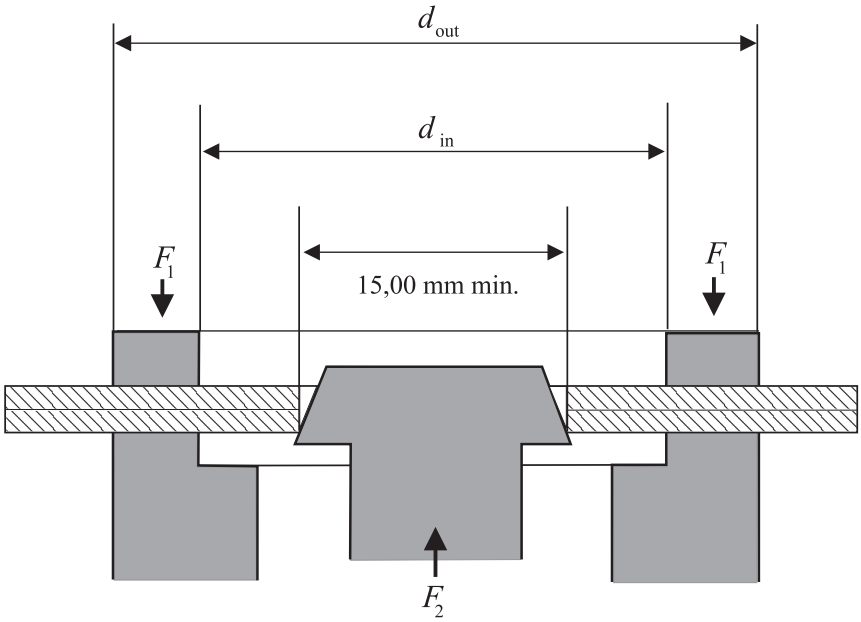

Figure A.2 - Clamping and chucking conditions

© ISO/IEC 2004 – All rights reserved
Copyright International Organization for Standardization
Reproduced by IHS under license with ISO
No reproduction or networking permitted without license from IHS
Not for Resale

Annex B
(normative)

Measurement of birefringence

B.1 Principle of the measurement

In order to measure the birefringence, circularly polarized light in a parallel beam is used. The phase retardation is measured by observing the ellipticity of the reflected light.

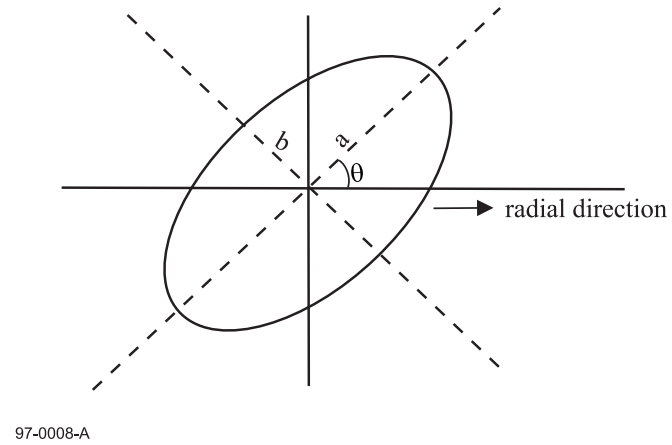

Figure B.1 – Ellipse with ellipticity *e = b/a* and orientation *θ*

The orientation θ of the ellipse is determined by the orientation of the optical axis

$$\theta = \gamma - \pi/4 \qquad \text{(I)}$$

where γ is the angle between the optical axis and the radial direction.

The ellipticity $e = b/a$ is a function of the phase retardation δ.

$$e = \tan\left[\frac{1}{2}\left(\frac{\pi}{2} - \delta\right)\right] \qquad \text{(II)}$$

When the phase retardation δ is known the birefringence BR can be expressed as a fraction of the wavelength.

$$BR = \frac{\lambda}{2\pi}\delta \ \text{ nm} \qquad \text{(III)}$$

Thus, by observing the elliptically polarized light reflected from the disk, the birefringence can be measured and the orientation of the optical axis can be assessed as well.

B.2 Measurements conditions

The measurement of the birefringence specified above shall be made under the following conditions:

Mode of measurement in reflection, double pass through the substrate.

Wavelength λ of the laser light 645 nm ± 15 nm

© ISO/IEC 2004 All rights reserved

Copyright International Organization for Standardization
Reproduced by IHS under license with ISO
No reproduction or networking permitted without license from IHS
Not for Resale

Beam diameter (FWHM)	1,0 mm ± 0,2 mm
Angle β of incidence in radial direction relative to the radial plane perpendicular to Reference Plane P	7,0° ± 0,2°
Clamping and chucking conditions	as specified by annex A
Disk mounting	horizontally
Rotation	less than 1 Hz
Temperature and relative humidity	as specified in 8.1.1.)

B.3 Example of a measuring set-up

Whilst this International Standard does not prescribe a specific device for measuring birefringence, the device shown schematically in figure B.2 as an example, is well suited for this measurement.

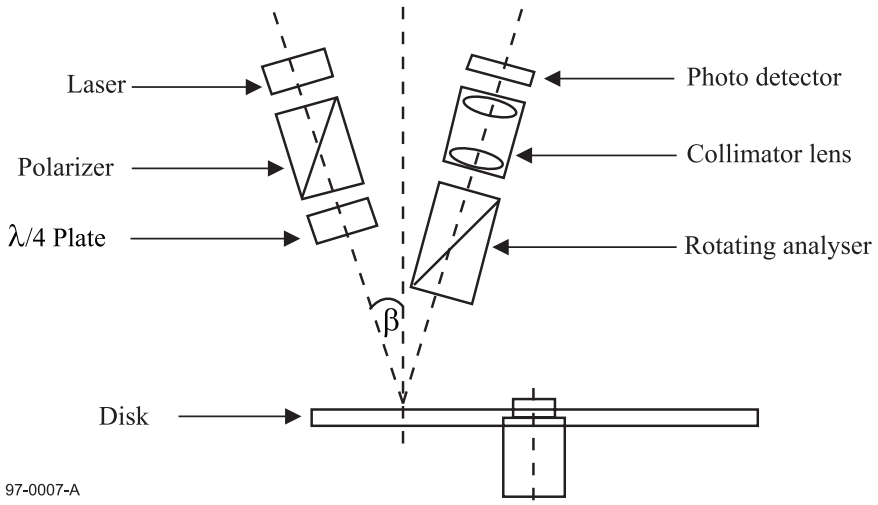

Figure B.2 – Example of a device for the measurement of birefringence

Light from a laser source, collimated into a polarizer (extinction ratio ≈ 10^{-5}), is made circular by a $\lambda/4$ plate. The ellipticity of the reflected light is analyzed by a rotating analyzer and a photo detector. For every location on the disk, the minimum and the maximum values of the intensity are measured. The ellipticity can then be calculated as

$$e^2 = I_{min.} / I_{max.} \qquad \text{(IV)}$$

Combining equations II, III and IV yields

$$BR = \lambda/4 - \lambda / \pi \times \arctan \sqrt{\frac{I_{min}}{I_{max}}}$$

This device can be easily calibrated as follows:

$I_{min.}$ is set to 0 by measuring a polarizer or a $\lambda/4$ plate.

$I_{min.} = I_{max.}$ when measuring a mirror.

Apart from the d.c. contribution of the front surface reflection, a.c. components may occur, due to the interference of the reflection(s) of the front surface with the reflection(s) from the recorded layer. These a.c. reflectance effects are significant only if the disk substrate has an extremely accurate flatness and if the light source has a high coherence.

© ISO/IEC 2004 – All rights reserved
Copyright International Organization for Standardization
Reproduced by IHS under license with ISO
No reproduction or networking permitted without license from IHS
Not for Resale

Annex C
(normative)

Measurement of the differential phase tracking error

C.1 Measuring method for the differential phase tracking error

The reference circuit for the measurement of the tracking error shall be that shown in figure C.1. Each output of the diagonal pairs of elements of the quadrant photo detector shall be digitized independently after equalization of the wave form defined by

$$H(s) = (1 + 1{,}11 \times 10^{-7}\ i\omega) / (1 + 3{,}26 \times 10^{-8}\ i\omega).$$

The gain of the comparators shall be sufficient to reach full saturation on the outputs, even with minimum signal amplitudes. Phases of the digitized pulse signal edges (signals B1 and B2) shall be compared to each other to produce a time-lead signal C1 and a time-lag signal C2. The phase comparator shall react to each individual edge with signal C1 or C2, depending on the sign of Δt_i. A tracking error signal shall be produced by smoothing the C1, C2 signals with low-pass filters and by subtracting by means of a unity gain differential amplifier. The low-pass filters shall be 1st order filters with a cut-off frequency of (-3 dB) 30 kHz.

Special attention shall be given to the implementation of the circuit because very small time differences have to be measured, indeed 1 % of T equals only 0,27 ns. Careful averaging is needed.

The average time difference between two signals from the diagonal pairs of elements of the quadrant detector shall be

$$\overline{\Delta t} = 1/N \sum \Delta t_i$$

where N is the number of edges both rising and falling.

C.2 Measurement of $\overline{\Delta t}/T$ without time interval analyzer

The relative time difference $\overline{\Delta t}/T$ is represented by the amplitude of the tracking error signal provided that the amplitudes of the C1 and C2 signals and the frequency component of the read-out signals are normalized. The relation between the tracking error amplitude $\overline{\Delta TVE}$ and the time difference is given by

$$\overline{\Delta TVE} = \frac{\sum \Delta t_i}{\sum T_i} \mathrm{Vpc} = \frac{\sum \Delta t_i}{NnT} \mathrm{Vpc} = \frac{\overline{\Delta t}}{T} \times \frac{\mathrm{Vpc}}{n}$$

where

Vpc is the amplitude of the C1 and C2 signals,

T_i is the actual length of the read-out signal in the range 3T to 14T,

nT is the weighted average value of the actual length,

$N\ n$ T is the total averaging time.

Assuming that Vpc equals 5 V and that the measured value of n equals 5, then the above relation between the tracking error amplitude $\overline{\Delta TVE}$ and the time difference $\overline{\Delta t}$ can be simplified to

$$\overline{\Delta TVE} = \overline{\Delta t} / T.$$

© ISO/IEC 2004 All rights reserved

Copyright International Organization for Standardization
Reproduced by IHS under license with ISO
No reproduction or networking permitted without license from IHS
Not for Resale

C.3 Calibration of $\overline{\Delta t}/T$

Special attention shall be given to the calibration of the gain of the phase comparator as it may tend to vary. The following check and calibration method shall be applied to the measurement of the differential phase tracking error signal:

a) Checking the measurement circuit:

1) Measure the relation between the amplitude of the first comparator input (3T) and the amplitude of the tracking error signal.

2) Check the current gain of the amplifier, using the saturation area (figure C.2).

b) Determination of the calibration factor K:

Because of the deviations of n and Vpc, and possibly some other circuit parameters, a calibration factor K has to be determined that

$$\overline{\Delta t} / T(real) = K \times \overline{\Delta TVE}(measured).$$

This can be achieved in the following way:

b.1) Generate two sinusoidal signals A1 and A2 of frequency 3,767 MHz (corresponding to 5T) with phase difference, and inject them into two equalizer circuits.

b.2) Measure the relation between $\overline{\Delta t}/T$ and $\overline{\Delta TVE}$, and determine K (Figure C.3).

$$K = \frac{\overline{\Delta t} / T(injected)}{\overline{\Delta TVE}(measured)}$$

It is recommended to add an amplifier of gain K to the measurement equipment for Differential phase tracking error, after the differential amplifier shown in figure C.1, which can adjust the calibration factor K and allow the measurement of $\overline{\Delta t}/T$ directly from the output.

© ISO/IEC 2004 – All rights reserved
Copyright International Organization for Standardization
Reproduced by IHS under license with ISO
No reproduction or networking permitted without license from IHS
Not for Resale

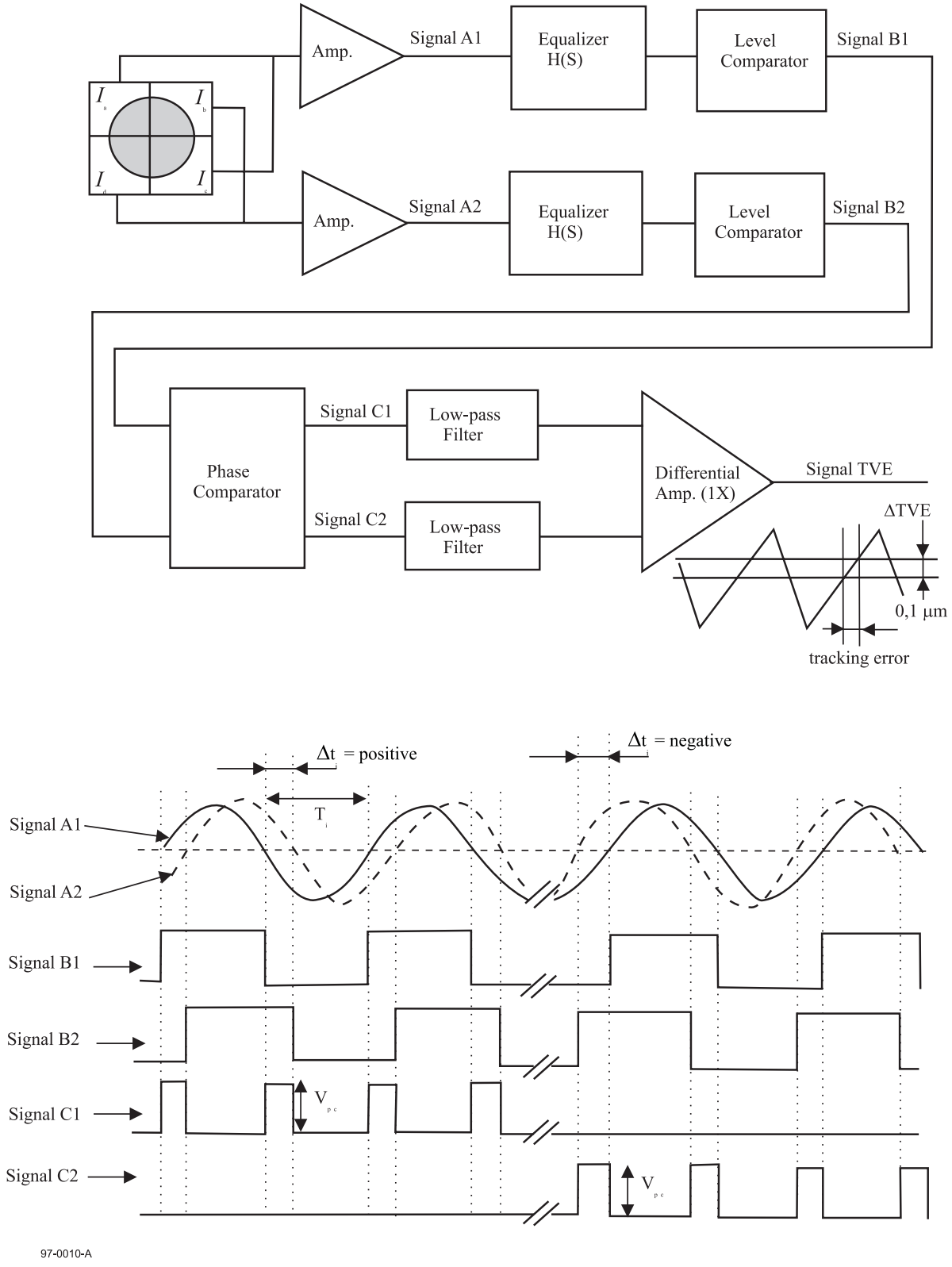

Figure C.1 - Circuit for tracking error measurements

© ISO/IEC 2004 All rights reserved
Copyright International Organization for Standardization
Reproduced by IHS under license with ISO
No reproduction or networking permitted without license from IHS
Not for Resale

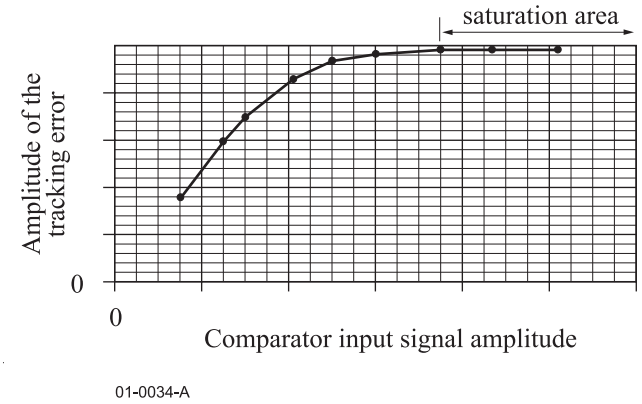

Figure C.2 - Comparator input signal amplitude vs tracking error signal amplitude

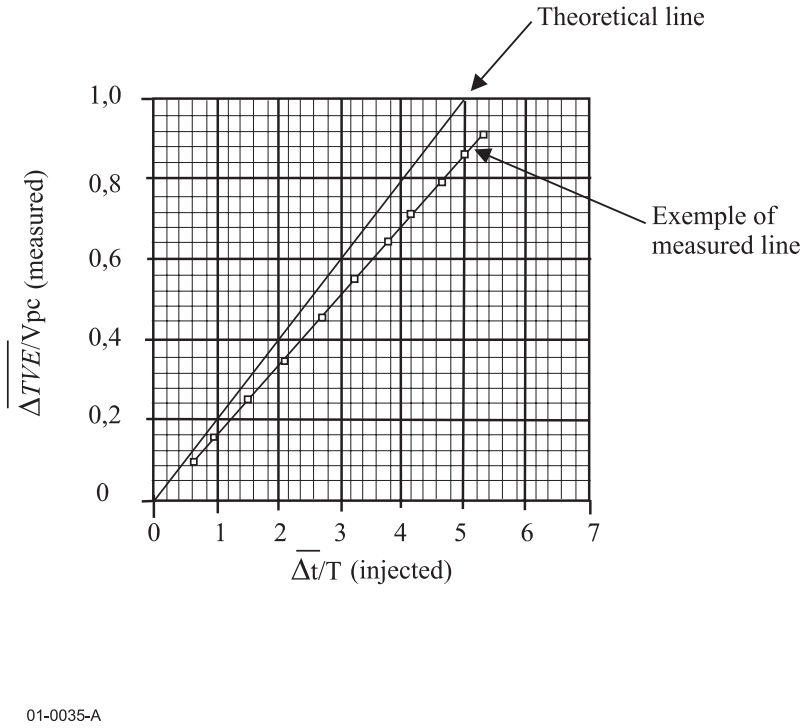

Figure C.3 - $\overline{\Delta t}$ /T vs $\overline{\Delta TVE}$

Copyright International Organization for Standardization
Reproduced by IHS under license with ISO
No reproduction or networking permitted without license from IHS
© ISO/IEC 2004 – All rights reserved
Not for Resale

Annex D
(normative)

Reflectivity calibration and measuring method

D.1 Calibration method

A good reference disk shall be chosen, for instance a 0,6 mm glass disk with a golden reflective mirror. This reference disk shall be measured by a parallel beam as shown in figure D.1

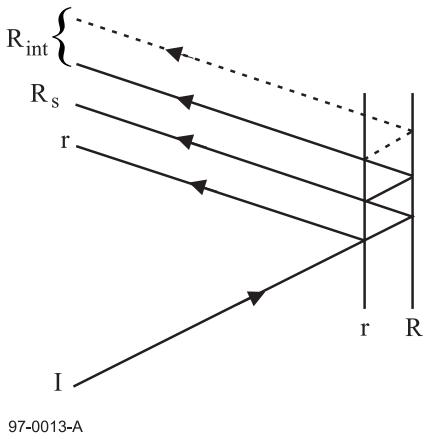

Figure D.1 - Reflectance calibration

In this figure the following applies:

I = incident beam
r = reflectivity of the entrance surface
R_S = main reflectivity of the recorded layer
R_{int} = other reflectivities of the entrance surface and of the recorded layer
$R_{//}$ = measured value, using the arrangement of figure D.1

$R_{//} = r + R_S + R_{int}$
$r = ((n-1) / (n+1))^2$ where n is the refraction index of the substrate
$R_S = R_{//} - r - R_{int}$
$R_S = [(1-r)^2 \times (R_{//} - r)] / [1-r \times (2 - R_{//})]$

The reference disk shall be measured on a reference drive. I_{mirror} obtained from the golden reflective mirror and measured by the focused beam, is equated to R_S as determined above.

Now the arrangement is calibrated and the focused reflectivity is a linear function of the reflectivity of the recorded layer, independently from the reflectivity of the entrance surface.

--`,,`-`-`,,`,,`,`,,`---
© ISO/IEC 2004 All rights reserved
Copyright International Organization for Standardization
Reproduced by IHS under license with ISO
No reproduction or networking permitted without license from IHS
Not for Resale

D.2 Measuring method

a) Reflectivity in Rewritable Area

A method of measuring the reflectivity with an Optical Head

1) Measure the reflective light power D_s from the reference disk with calibrated reflectivity Rs.
2) Measure the reflective light power D_m from Mirror field.
3) Calculate the disk reflectivity R_d in the Rewritable Area as follows:

$$R_d = \frac{R_s}{D_s} \times D_m$$

b) Reflectivity in Embossed Area

A method of measuring the reflectivity by an Optical Head

1) Measure the reflective light power Ds from the reference disk with calibrated reflectivity R_S.
2) Measure the reflective light power I_{14H} from Embossed Area (see figure 48).
3) Calculate the disk reflectivity R_{14H} in the Embossed Area as follows:

$$R_{14H} = \frac{R_s}{D_s} \times I_{14H}$$

© ISO/IEC 2004 – All rights reserved
Copyright International Organization for Standardization
Reproduced by IHS under license with ISO
No reproduction or networking permitted without license from IHS
Not for Resale

Annex E
(normative)

Tapered cone for disk clamping

The device used for centring the disk for measurement shall be a cone with a taper angle β = 40,0°± 0,5° (see figure E.1).

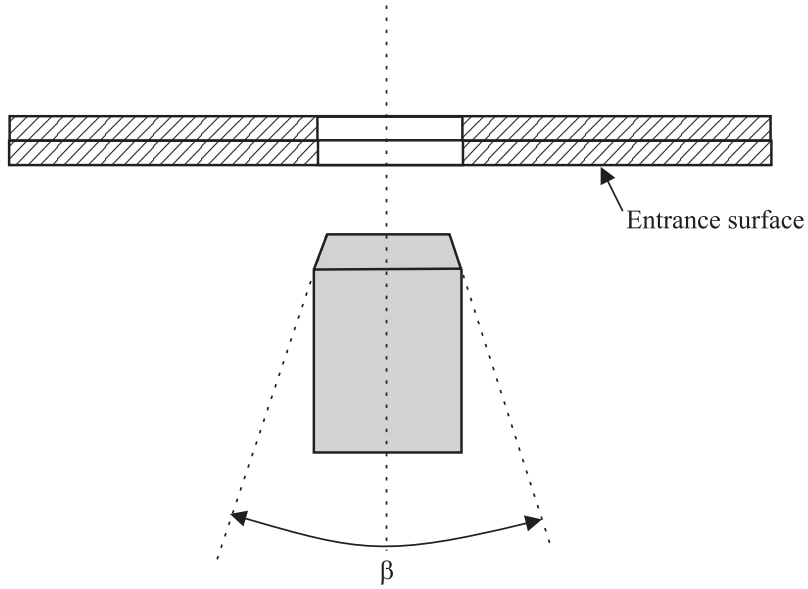

Figure E.1 - Tapered cone

© ISO/IEC 2004 All rights reserved
Copyright International Organization for Standardization
Reproduced by IHS under license with ISO
No reproduction or networking permitted without license from IHS
Not for Resale

Annex F
(normative)

Measuring conditions for the operation signals

1) PLL

   Natural Frequency at 4T: $\omega_n = 0{,}6\times10^6$ rad/s

   Damping Ratio at 4T: $\xi = 0{,}7$

2) Slicer

   The slicer shall be a feed-back auto-slicer with a -3 dB closed-loop bandwidth of 20 kHz, 1st order integrating.

3) Jitter

   The jitter in a quarter revolution of the disk shall be measured. Measurement frequency bandwidth shall be from 1 kHz to HF.

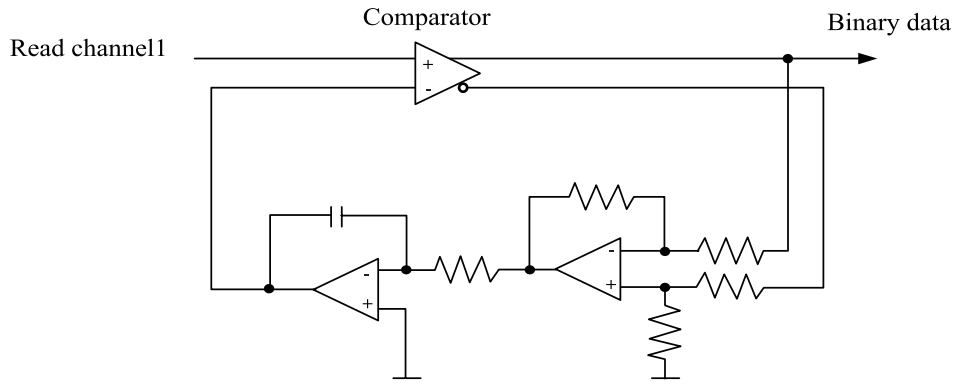

Figure F.1 - An example of circuit diagram of slicer

Low-pass filter (LPF): 6th order Bessel filter, f_c (-3 dB) = 20,0 MHz

Example of an analogue equalizer: 3-tap transversal filter with transfer function

$H(z) = 1{,}60\ z^{-2} - 0{,}30\ (1 + z^{-4})$

Filtering and equalization:

Gain variation: 1 dB max. (below 15 MHz)

Group delay variation: 1,5 ns max. (below 14 MHz)

(Gain at 12 MHz - Gain at 0 Hz) = 5,5 dB ± 0,3 dB

© ISO/IEC 2004 – All rights reserved
Copyright International Organization for Standardization
Reproduced by IHS under license with ISO
No reproduction or networking permitted without license from IHS
Not for Resale

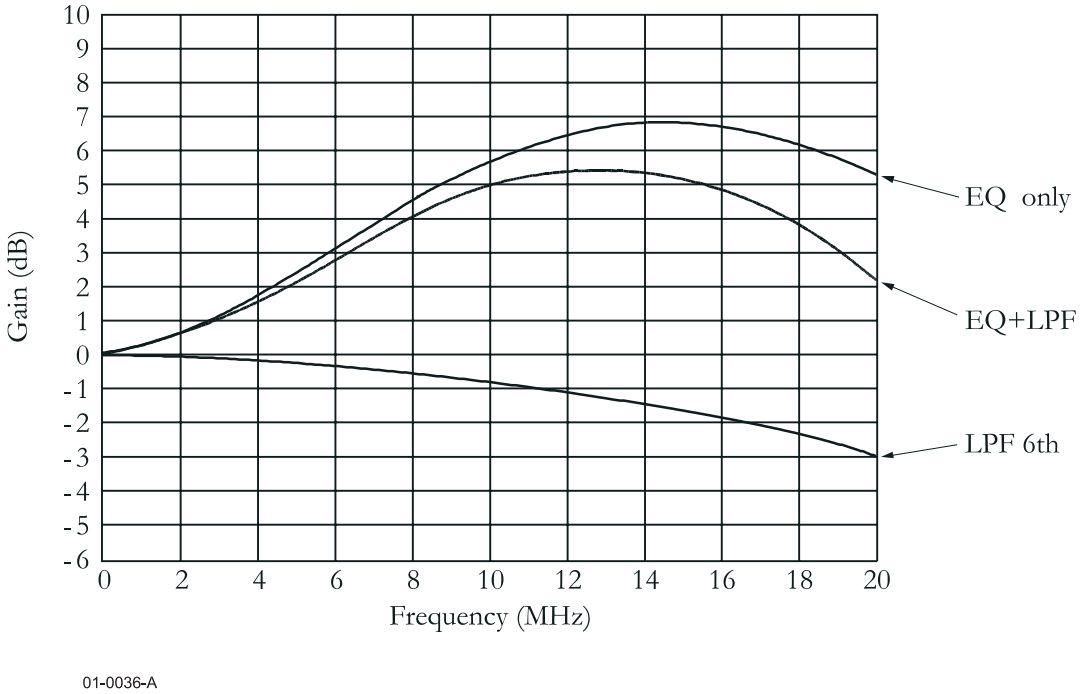

Figure F.2 - Frequency characteristics for the equalizer and the low-pass filter

© ISO/IEC 2004 - All rights reserved

Copyright International Organization for Standardization
Reproduced by IHS under license with ISO
No reproduction or networking permitted without license from IHS
Not for Resale

Annex G
(normative)

8-to-16 Recording code with RLL (2,10) requirements

Tables G.1 and G.2 list the 16-bit Code Words into which the 8-bit coded Data bytes have to be transformed. Figure G.1 shows schematically how the Code Words and the associated State specification are generated.

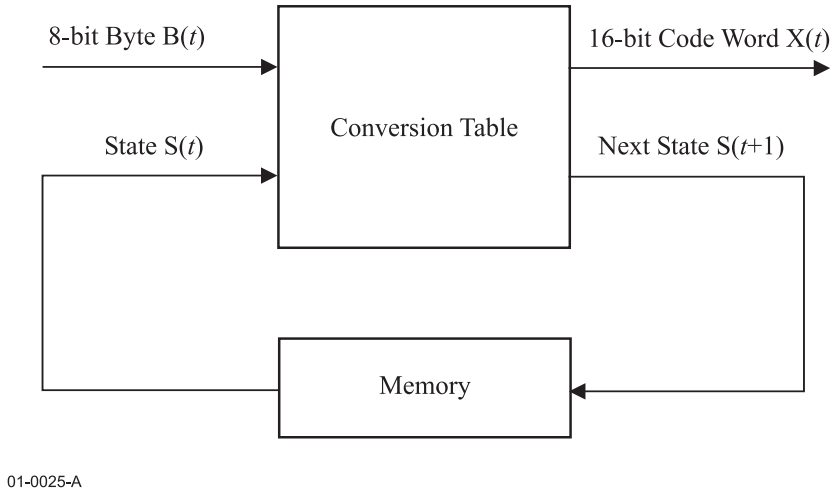

Figure G.1 - Code Words generation

In this figure:

$X(t) = H\ \{B(t), S(t)\}$ $X_{15}(t)$ = msb and $X_0(t)$ = lsb

$S(t+1) = G\{B(t), S(t)\}$

H is the output function.

G is the next-state function.

The Code Words leaving the States shall be chosen so that the concatenation of Code Words entering a State and those leaving that State satisfy the requirement that between two ONEs there shall be at least 2 and at most 10 ZEROs.

As additional requirements:

- Code Words leaving State 2 shall have both bit X_{15} and bit X_3 set to ZERO, and
- in Code Words leaving State 3 bit X_{15} or bit X_3 or both shall be set to ONE.

This means that the Code Word sets of States 2 and 3 are disjointed.

© ISO/IEC 2004 – All rights reserved
Copyright International Organization for Standardization
Reproduced by IHS under license with ISO
No reproduction or networking permitted without license from IHS
Not for Resale

Code Word X(*t*)	Next State S(*t*+1)	Code Word X(*t*+1)
Ends with 1 or no trailing ZERO	State 1	Starts with 2 or up to 9 leading ZEROs
Ends with 2 or up to 5 trailing ZEROs	State 2	Starts with 1 or up to 5 leading ZEROs, and $X_{15}(t+1),X_3(t+1) = 0,0$
Ends with 2 or up to 5 trailing ZEROs	State 3	Starts with none or up to 5 leading ZEROs, and $X_{15}(t+1),X_3(t+1) \neq 0,0$
Ends with 6 or up to 9 trailing ZEROs	State 4	Starts with 1 or no leading ZERO

Figure G.2 - Determination of States

Note that when decoding the recorded data, knowledge about the encoder is required to be able to reconstitute the original main Data.

$$B(t) = H^{-1} \{X(t), S(t)\}$$

Because of the involved error propagation, such state-dependent decoding is to be avoided. In the case of this 8-to-16 recording code, the conversion tables have been chosen in such a way that knowledge about the State is not required in most cases. As can be gathered from the tables, in some cases, two 8-bit bytes, for instance the 8-bit bytes 5 and 6 in States 1 and 2 in table F.1, generate the same 16-bit Code Words. The construction of the tables allows to solve this apparent ambiguity. Indeed, if two identical Code Words leave a State, one of them goes to State 2 and the other to State 3. Because the setting of bits X_{15} and X_3 is always different in these two States, any Code Word can be uniquely decoded by analysing the Code Word itself together with bits X_{15} and X_3 of the next Code Word:

$$B(t) = H^{-1} \{ X(t), X_{15}(t+1), X_3(t+1) \}$$

In the tables, the 8-bit bytes are identified by their decimal value.

© ISO/IEC 2004 All rights reserved

Copyright International Organization for Standardization
Reproduced by IHS under license with ISO
No reproduction or networking permitted without license from IHS
Not for Resale

Table G.1 - Main Conversion Table (continued)

8-bit byte	State 1		State 2		State 3		State 4	
	Code Word msb lsb	Next State	Code Word msb lsb	Next State	Code Word msb lsb	Next State	Code Word msb lsb	Next State
0	0010000000001001	1	0100000100100000	2	0010000000001001	1	0100000100100000	2
1	0010000000010010	1	0010000000010010	1	1000000100100000	3	1000000100100000	3
2	0010000100100000	2	0010000100100000	2	1000000000010010	1	1000000000010010	1
3	0010000001001000	2	0100010010000000	4	0010000001001000	2	0100010010000000	4
4	0010000010010000	2	0010000010010000	2	1000000100100000	2	1000000100100000	2
5	0010000000100100	2	0010000000100100	2	1001001000000000	4	1001001000000000	4
6	0010000000100100	3	0010000000100100	3	1000100100000000	4	1000100100000000	4
7	0010000001001000	3	0100000000010010	1	0010000001001000	3	0100000000010010	1
8	0010000010010000	3	0010000010010000	3	1000010010000000	4	1000010010000000	4
9	0010000100100000	3	0010000100100000	3	1001001000000001	1	1001001000000001	1
10	0010010010000000	4	0010010010000000	4	1000100100000001	1	1000100100000001	1
11	0010001001000000	4	0010001001000000	4	1000000010010000	3	1000000010010000	3
12	0010010010000001	1	0010010010000001	1	1000000010010000	2	1000000010010000	2
13	0010001001000001	1	0010001001000001	1	1000010010000001	1	1000010010000001	1
14	0010000001001001	1	0100000000100100	3	0010000001001001	1	0100000000100100	3
15	0010000100100001	1	0010000100100001	1	1000001001000001	1	1000001001000001	1
16	0010000010010001	1	0010000010010001	1	1000000100100001	1	1000000100100001	1
17	0010000000100010	1	0010000000100010	1	1000001001000000	4	1000001001000000	4
18	0001000000001001	1	0100000010010000	2	0001000000001001	1	0100000010010000	2
19	0010000000010001	1	0010000000010001	1	1001000100000000	4	1001000100000000	4
20	0001000000010010	1	0001000000010010	1	1000100010000000	4	1000100010000000	4
21	0000100000000010	1	0000100000000010	1	1000000010010001	1	1000000010010001	1
22	0000010000000001	1	0000010000000001	1	1000000001001001	1	1000000001001001	1
23	0010001000100000	2	0010001000100000	2	1000000001001000	2	1000000001001000	2
24	0010000100010000	2	0010000100010000	2	1000000001001000	3	1000000001001000	3
25	0010000010001000	2	0100000000100100	2	0010000010001000	2	0100000000100100	2
26	0010000001000100	2	0010000001000100	2	1000000000100010	1	1000000000100010	1
27	0001000100100000	2	0001000100100000	2	1000000000010001	1	1000000000010001	1
28	0010000000001000	2	0100000010010000	3	0010000000001000	2	0100000010010000	3
29	0001000010010000	2	0001000010010000	2	1001001000000010	1	1001001000000010	1
30	0001000001001000	2	0100000100100000	3	0001000001001000	2	0100000100100000	3
31	0001000000100100	2	0001000000100100	2	1001000100000001	1	1001000100000001	1
32	0001000000000100	2	0001000000000100	2	1000100100000010	1	1000100100000010	1
33	0001000000000100	3	0001000000000100	3	1000100010000001	1	1000100010000001	1
34	0001000000100100	3	0001000000100100	3	1000000000100100	2	1000000000100100	2
35	0001000001001000	3	0100001001000000	4	0001000001001000	3	0100001001000000	4
36	0001000010010000	3	0001000010010000	3	1000000000100100	3	1000000000100100	3
37	0001000100100000	3	0001000100100000	3	1000010001000000	4	1000010001000000	4
38	0010000000001000	3	0100100100000001	1	0010000000001000	3	0100100100000001	1
39	0010000001000100	3	0010000001000100	3	1001000010000000	4	1001000010000000	4
40	0010000010001000	3	0100010010000001	1	0010000010001000	3	0100010010000001	1
41	0010000100010000	3	0010000100010000	3	1000010010000010	1	1000010010000010	1
42	0010001000100000	3	0010001000100000	3	1000001000100000	2	1000001000100000	2
43	0010010001000000	4	0010010001000000	4	1000010001000001	1	1000010001000001	1
44	0001001001000000	4	0001001001000000	4	1000001000100000	3	1000001000100000	3
45	0000001000000001	1	0100010001000000	4	1000001001000010	1	0100010001000000	4

Copyright International Organization for Standardization
Reproduced by IHS under license with ISO
No reproduction or networking permitted without license from IHS
Not for Resale
© ISO/IEC 2004 – All rights reserved

Table G.1 - Main Conversion Table (continued)

8-bit byte	State 1		State 2		State 3		State 4	
	Code Word msb lsb	Next State	Code Word msb lsb	Next State	Code Word msb lsb	Next State	Code Word msb lsb	Next State
46	0010010010000010	1	0010010010000010	1	1000001000100001	1	1000001000100001	1
47	0010000010001001	1	0100001001000001	1	0010000010001001	1	0100001001000001	1
48	0010010001000001	1	0010010001000001	1	1000000100010000	2	1000000100010000	2
49	0010001001000010	1	0010001001000010	1	1000000010001000	2	1000000010001000	2
50	0010001000100001	1	0010001000100001	1	1000000100010000	3	1000000100010000	3
51	0001000001001001	1	0100000100100001	1	0001000001001001	1	0100000100100001	1
52	0010000100100010	1	0010000100100010	1	1000000100100010	1	1000000100100010	1
53	0010000100010001	1	0010000100010001	1	1000000100010001	1	1000000100010001	1
54	0010000010010010	1	0010000010010010	1	1000000010010010	1	1000000010010010	1
55	0010000001000010	1	0010000001000010	1	1000000010001001	1	1000000010001001	1
56	0010000000100001	1	0010000000100001	1	1000000001000010	1	1000000001000010	1
57	0000100000001001	1	0100000010010001	1	0000100000001001	1	0100000010010001	1
58	0001001001000001	1	0001001001000001	1	1000000000100001	1	1000000000100001	1
59	0001000100100001	1	0001000100100001	1	0100000001001001	1	0100000001001001	1
60	0001000010010001	1	0001000010010001	1	1001001000010010	1	1001001000010010	1
61	0001000000100010	1	0001000000100010	1	1001001000001001	1	1001001000001001	1
62	0001000000010001	1	0001000000010001	1	1001000100000010	1	1001000100000010	1
63	0000100000010010	1	0000100000010010	1	1000000001000100	2	1000000001000100	2
64	0000010000000010	1	0000010000000010	1	0100000001001000	2	0100000001001000	2
65	0010010000100000	2	0010010000100000	2	1000010000100000	2	1000010000100000	2
66	0010001000010000	2	0010001000010000	2	1000001000010000	2	1000001000010000	2
67	0010000100001000	2	0100000000100010	1	0010000100001000	2	0100000000100010	1
68	0010000010000100	2	0010000010000100	2	1000000100001000	2	1000000100001000	2
69	0010000000010000	2	0010000000010000	2	1000000010000100	2	1000000010000100	2
70	0001000010001000	2	0100001000100000	2	0001000010001000	2	0100001000100000	2
71	0001001000100000	2	0001001000100000	2	0100000010001000	2	0100000010001000	2
72	0001000000001000	2	0100000100010000	2	0001000000001000	2	0100000100010000	2
73	0001000100010000	2	0001000100010000	2	1000000001000100	3	1000000001000100	3
74	0001000001000100	2	0001000001000100	2	0100000001001000	3	0100000001001000	3
75	0000100100100000	2	0000100100100000	2	1000010000100000	3	1000010000100000	3
76	0000100010010000	2	0000100010010000	2	1000001000010000	3	1000001000010000	3
77	0000100001001000	2	0100000001000100	2	0000100001001000	2	0100000001000100	2
78	0000100000100100	2	0000100000100100	2	1000000100001000	3	1000000100001000	3
79	0000100000000100	2	0000100000000100	2	1000000010000100	3	1000000010000100	3
80	0000100000000100	3	0000100000000100	3	0100000010001000	3	0100000010001000	3
81	0000100000100100	3	0000100000100100	3	1000100001000000	4	1000100001000000	4
82	0000100001001000	3	0100000001000100	3	0000100001001000	3	0100000001000100	3
83	0000100010010000	3	0000100010010000	3	1000000010001000	3	1000000010001000	3
84	0000100100100000	3	0000100100100000	3	1001001001001000	2	1001001001001000	2
85	0001000000001000	3	0100000100010000	3	0001000000001000	3	0100000100010000	3
86	0001000001000100	3	0001000001000100	3	1001001000100100	2	1001001000100100	2
87	0001000010001000	3	0100001000100000	3	0001000010001000	3	0100001000100000	3
88	0001000100010000	3	0001000100010000	3	1001001001001000	3	1001001001001000	3
89	0001001000100000	3	0001001000100000	3	1001000010000001	1	1001000010000001	1
90	0010000000010000	3	0010000000010000	3	1000100100010010	1	1000100100010010	1
91	0010000010000100	3	0010000010000100	3	1000100100001001	1	1000100100001001	1
92	0010000100001000	3	0100000000010001	1	0010000100001000	3	0100000000010001	1
93	0010001000010000	3	0010001000010000	3	1000100010000010	1	1000100010000010	1
94	0010010000100000	3	0010010000100000	3	1000100001000001	1	1000100001000001	1

© ISO/IEC 2004 All rights reserved
Copyright International Organization for Standardization
Reproduced by IHS under license with ISO
No reproduction or networking permitted without license from IHS
Not for Resale

Table G.1 - Main Conversion Table (continued)

8-bit byte	State 1		State 2		State 3		State 4	
	Code Word msb lsb	Next State	Code Word msb lsb	Next State	Code Word msb lsb	Next State	Code Word msb lsb	Next State
95	0000001000000010	1	0100100100000010	1	1000010010010010	1	0100100100000010	1
96	0000000100000001	1	0100100010000001	1	1000010001001001	1	0100100010000001	1
97	0010010010001001	1	0100010000100000	2	0010010010001001	1	0100010000100000	2
98	0010010010010010	1	0010010010010010	1	1001001000000100	2	1001001000000100	2
99	0010010001000010	1	0010010001000010	1	1001001000100100	3	1001001000100100	3
100	0010010000100001	1	0010010000100001	1	1000010001000010	1	1000010001000010	1
101	0010001001001001	1	0100010010000010	1	0010001001001001	1	0100010010000010	1
102	0010001000100010	1	0010001000100010	1	1000010000100001	1	1000010000100001	1
103	0010001000010001	1	0010001000010001	1	1000001001001001	1	1000001001001001	1
104	0010000100010010	1	0010000100010010	1	1000001000100010	1	1000001000100010	1
105	0010000010000010	1	0010000010000010	1	1000001000010001	1	1000001000010001	1
106	0010000100001001	1	0100001000010000	2	0010000100001001	1	0100001000010000	2
107	0010000001000001	1	0010000001000001	1	1000000100010010	1	1000000100010010	1
108	0001001001000010	1	0001001001000010	1	1000000100001001	1	1000000100001001	1
109	0001001000100001	1	0001001000100001	1	1000000010000010	1	1000000010000010	1
110	0001000100100010	1	0001000100100010	1	1000000001000001	1	1000000001000001	1
111	0001000100010001	1	0001000100010001	1	0100000010001001	1	0100000010001001	1
112	0001000010010010	1	0001000010010010	1	1001001001001001	1	1001001001001001	1
113	0001000001000010	1	0001000001000010	1	1001001000100010	1	1001001000100010	1
114	0001000010001001	1	0100010000100000	3	0001000010001001	1	0100010000100000	3
115	0001000000100001	1	0001000000100001	1	1001001000010001	1	1001001000010001	1
116	0000100100100001	1	0000100100100001	1	1001000100010010	1	1001000100010010	1
117	0000100010010001	1	0000100010010001	1	1001000100001001	1	1001000100001001	1
118	0000100001001001	1	0100010001000001	1	0000100001001001	1	0100010001000001	1
119	0000100000100010	1	0000100000100010	1	1000100100100100	2	1000100100100100	2
120	0000100000010001	1	0000100000010001	1	1000100100000100	2	1000100100000100	2
121	0000010000001001	1	0100001001000010	1	0000010000001001	1	0100001001000010	1
122	0000010000010010	1	0000010000010010	1	1000100000100000	2	1000100000100000	2
123	0010010010000100	2	0010010010000100	2	1000010010000100	2	1000010010000100	2
124	0010010000010000	2	0010010000010000	2	1000010000010000	2	1000010000010000	2
125	0010001000001000	2	0100001000100001	1	0010001000001000	2	0100001000100001	1
126	0010001001000100	2	0010001001000100	2	1000001001000100	2	1000001001000100	2
127	0001000100001000	2	0100000100100010	1	0001000100001000	2	0100000100100010	1
128	0010000100100100	2	0010000100100100	2	1000001000001000	2	1000001000001000	2
129	0000100010001000	2	0100000100010001	1	0000100010001000	2	0100000100010001	1
130	0010000100000100	2	0010000100000100	2	1000000100100100	2	1000000100100100	2
131	0010000000100000	2	0010000000100000	2	1001001000000100	3	1001001000000100	3
132	0001001000010000	2	0001001000010000	2	1000100100100100	3	1000100100100100	3
133	0000100000001000	2	0100000010010010	1	0000100000001000	2	0100000010010010	1
134	0001000010000100	2	0001000010000100	2	1000100000100000	3	1000100000100000	3
135	0001000000010000	2	0001000000010000	2	1000010010000100	3	1000010010000100	3
136	0000100100010000	2	0000100100010000	2	1000010000010000	3	1000010000010000	3
137	0000100001000100	2	0000100001000100	2	1000001001000100	3	1000001001000100	3
138	0000010001001000	2	0100000001000010	1	0000010001001000	2	0100000001000010	1
139	0000010010010000	2	0000010010010000	2	1000001000001000	3	1000001000001000	3
140	0000010000100100	2	0000010000100100	2	1001000010000010	1	1001000010000010	1
141	0000010000000100	2	0000010000000100	2	1000000100000100	2	1000000100000100	2
142	0000010000000100	3	0000010000000100	3	1000000100100100	3	1000000100100100	3
143	0000010000100100	3	0000010000100100	3	1000000100000100	3	1000000100000100	3

© ISO/IEC 2004 – All rights reserved
Copyright International Organization for Standardization
Reproduced by IHS under license with ISO
No reproduction or networking permitted without license from IHS
Not for Resale

Table G.1 - Main Conversion Table (continued)

8-bit byte	State 1		State 2		State 3		State 4	
	Code Word msb lsb	Next State	Code Word msb lsb	Next State	Code Word msb lsb	Next State	Code Word msb lsb	Next State
144	0000010001001000	3	0100000010000100	2	0000010001001000	3	0100000010000100	2
145	0000010010010000	3	0000010010010000	3	1001000001000000	4	1001000001000000	4
146	0000100000001000	3	0100000000010000	2	0000100000001000	3	0100000000010000	2
147	0000100001000100	3	0000100001000100	3	1000000000100000	2	1000000000100000	2
148	0000100010001000	3	0100000010000100	3	0000100010001000	3	0100000010000100	3
149	0000100100010000	3	0000100100010000	3	1000000000100000	3	1000000000100000	3
150	0001000000010000	3	0001000000010000	3	0100000100001000	3	0100000100001000	3
151	0001000010000100	3	0001000010000100	3	1000000001000000	4	1000000001000000	4
152	0001000100001000	3	0100001000010000	3	0001000100001000	3	0100001000010000	3
153	0001001000010000	3	0001001000010000	3	1001000001000001	1	1001000001000001	1
154	0010000000100000	3	0010000000100000	3	0100000100001000	2	0100000100001000	2
155	0010000100000100	3	0010000100000100	3	1001000100100100	3	1001000100100100	3
156	0010000100100100	3	0010000100100100	3	1000100100100010	1	1000100100100010	1
157	0010001000001000	3	0100000000100001	1	0010001000001000	3	0100000000100001	1
158	0010001001000100	3	0010001001000100	3	1000100100000100	3	0100100100000000	4
159	0010010000010000	3	0010010000010000	3	1001001001000100	2	1001001001000100	2
160	0010010010000100	3	0010010010000100	3	1001001000001000	2	1001001000001000	2
161	0000001000010010	1	0100000000010000	3	1000100100010001	1	0100000000010000	3
162	0000001000001001	1	0100100100100100	2	1000100010010010	1	0100100100100100	2
163	0000000100000010	1	0100100100100100	3	1000100010001001	1	0100100100100100	3
164	0000000010000001	1	0100100100010010	1	1000100001000010	1	0100100100010010	1
165	0010010010010001	1	0010010010010001	1	1001000100100100	2	1001000100100100	2
166	0010010000100010	1	0010010000100010	1	1001000100000100	2	1001000100000100	2
167	0010010001001001	1	0100100100000100	2	0010010001001001	1	0100100100000100	2
168	0010010000010001	1	0010010000010001	1	1001001001000100	3	1001001001000100	3
169	0010001000010010	1	0010001000010010	1	1000100000100001	1	1000100000100001	1
170	0010000100000010	1	0010000100000010	1	1000010010010001	1	1000010010010001	1
171	0010001000001001	1	0100100000100000	3	0010001000001001	1	0100100000100000	3
172	0010000010000001	1	0010000010000001	1	1000010001001001	1	1000010001001001	1
173	0001001000100010	1	0001001000100010	1	1000010000100010	1	1000010000100010	1
174	0001001000010001	1	0001001000010001	1	1000010000010001	1	1000010000010001	1
175	0001000100010010	1	0001000100010010	1	1000001000010010	1	1000001000010010	1
176	0001000010000010	1	0001000010000010	1	1000001000001001	1	1000001000001001	1
177	0001001001001001	1	0100100010000010	1	0001001001001001	1	0100100010000010	1
178	0001000001000001	1	0001000001000001	1	1000000100000010	1	1000000100000010	1
179	0000100100100010	1	0000100100100010	1	1000000010000001	1	1000000010000001	1
180	0000100100010001	1	0000100100010001	1	0100100100001001	1	0100100100001001	1
181	0001000100001001	1	0100100000100000	2	0001000100001001	1	0100100000100000	2
182	0000100010010010	1	0000100010010010	1	0100010010001001	1	0100010010001001	1
183	0000100001000010	1	0000100001000010	1	0100001001001001	1	0100001001001001	1
184	0000100010001001	1	0100010010000100	3	0000100010001001	1	0100010010000100	3
185	0000100000100001	1	0000100000100001	1	1001000000100000	2	1001000000100000	2
186	0000010010010001	1	0000010010010001	1	1000100100001000	2	1000100100001000	2
187	0000010000100010	1	0000010000100010	1	1000100010000100	2	1000100010000100	2
188	0000010001001001	1	0100100001000001	1	0000010001001001	1	0100100001000001	1
189	0000010000010001	1	0000010000010001	1	1000100000010000	2	1000100000010000	2
190	0000001001001000	2	0100010010000100	2	1000010010001000	2	0100010010000100	2
191	0000001000100100	2	0100010000010000	2	1000010001000100	2	0100010000010000	2
192	0000001000000100	2	0100001001000100	2	1000010000001000	2	0100001001000100	2

-`-`-,`-`-`,,`,`,`,,`,`---

© ISO/IEC 2004 All rights reserved
Copyright International Organization for Standardization
Reproduced by IHS under license with ISO
No reproduction or networking permitted without license from IHS
Not for Resale

Table G.1 - Main Conversion Table (continued)

8-bit byte	State 1		State 2		State 3		State 4	
	Code Word msb lsb	Next State	Code Word msb lsb	Next State	Code Word msb lsb	Next State	Code Word msb lsb	Next State
193	0010010010001000	2	0100010000010000	3	0010010010001000	2	0100010000010000	3
194	0010010001000100	2	0010010001000100	2	1000001001001000	2	1000001001001000	2
195	0010010000001000	2	0100010010010010	1	0010010000001000	2	0100010010010010	1
196	0010001000100100	2	0010001000100100	2	1000001000100100	2	1000001000100100	2
197	0010001000000100	2	0010001000000100	2	1000001000000100	2	1000001000000100	2
198	0010001001001000	2	0100010001000010	1	0010001001001000	2	0100010001000010	1
199	0001001001000100	2	0001001001000100	2	0100001000001000	2	0100001000001000	2
200	0001000100100100	2	0001000100100100	2	1001000000100000	3	1001000000100000	3
201	0001000100000100	2	0001000100000100	2	1000100100001000	3	1000100100001000	3
202	0001001000001000	2	0100010000100001	1	0001001000001000	2	0100010000100001	1
203	0001000000100000	2	0001000000100000	2	1000100010000100	3	1000100010000100	3
204	0000100010000100	2	0000100010000100	2	1000010010001000	3	1000010010001000	3
205	0000100000010000	2	0000100000010000	2	1000010001000100	3	1000010001000100	3
206	0000100100001000	2	0100001000100010	1	0000100100001000	2	0100001000100010	1
207	0000010010001000	2	0100001000010001	1	0000010010001000	2	0100001000010001	1
208	0000010001000100	2	0000010001000100	2	1000001000100100	3	1000001000100100	3
209	0000010000001000	2	0100000100010010	1	0000010000001000	2	0100000100010010	1
210	0000001000000100	3	0100000010000010	1	1000010000001000	3	0100000010000010	1
211	0000001000100100	3	0100000100100100	2	1000001001001000	3	0100000100100100	2
212	0000001001001000	3	0100000100000100	2	1000001000000100	3	0100000100000100	2
213	0000010000001000	3	0100000001000001	1	0000010000001000	3	0100000001000001	1
214	0000010001000100	3	0000010001000100	3	0100001000001000	3	0100001000001000	3
215	0000010010001000	3	0100000000100000	2	0000010010001000	3	0100000000100000	2
216	0000100000010000	3	0000100000010000	3	1001001000010000	3	1001001000010000	3
217	0000100010000100	3	0000100010000100	3	1001000100000100	3	1001000100000100	3
218	0000100100001000	3	0100000100000100	3	0000100100001000	3	0100000100000100	3
219	0001000000100000	3	0001000000100000	3	0100000100001001	1	0100000100001001	1
220	0001000100000100	3	0001000100000100	3	1001001000010000	2	1001001000010000	2
221	0001000100100100	3	0001000100100100	3	1001000100001000	2	1001000100001000	2
222	0001001000001000	3	0100000100100100	3	0001001000001000	3	0100000100100100	3
223	0001001001000100	3	0001001001000100	3	1001001000001000	3	1001001000001000	3
224	0010001000000100	3	0010001000000100	3	1000100000010000	3	1000100000010000	3
225	0010001000100100	3	0010001000100100	3	1001001001000010	1	1001001001000010	1
226	0010001001001000	3	0100001001000100	3	0010001001001000	3	0100001001000100	3
227	0010010000001000	3	0100100100000100	3	0010010000001000	3	0100100100000100	3
228	0010010001000100	3	0010010001000100	3	1001000100001000	3	1001000100001000	3
229	0010010010001000	3	0100000000100000	3	0010010010001000	3	0100000000100000	3
230	0010000001000000	4	0010000001000000	4	1001001000100001	1	1001001000100001	1
231	0000001001001001	1	0100100100100010	1	1001000100100010	1	0100100100100010	1
232	0000001000100010	1	0100100010000100	2	1001000100010001	1	0100100010000100	2
233	0000001000010001	1	0100100000010000	2	1001000010010010	1	0100100000010000	2
234	0000000100010010	1	0100000001000000	4	1001000010001001	1	0100000001000000	4
235	0000000100001001	1	0100100100010001	1	1001000001000010	1	0100100100010001	1
236	0000000010000010	1	0100100010010010	1	1001000000100001	1	0100100010010010	1
237	0000000001000001	1	0100100001000010	1	1000100100100001	1	0100100001000010	1
238	0010010000010010	1	0010010000010010	1	1000100010010001	1	1000100010010001	1
239	0010001000000010	1	0010001000000010	1	1001000010000100	3	1001000010000100	3
240	0010010000001001	1	0100100010000100	3	0010010000001001	1	0100100010000100	3
241	0010000100000001	1	0010000100000001	1	1001000010000100	2	1001000010000100	2

Copyright International Organization for Standardization
Reproduced by IHS under license with ISO
No reproduction or networking permitted without license from IHS
Not for Resale
© ISO/IEC 2004 – All rights reserved

Table G.1 - Main Conversion Table (concluded)

8-bit byte	State 1		State 2		State 3		State 4	
	Code Word msb lsb	Next State	Code Word msb lsb	Next State	Code Word msb lsb	Next State	Code Word msb lsb	Next State
242	0001001000010010	1	0001001000010010	1	1000000010000000	4	1000000010000000	4
243	0001000100000010	1	0001000100000010	1	1000100001001001	1	1000100001001001	1
244	0001001000001001	1	0100100000100001	1	0001001000001001	1	0100100000100001	1
245	0001000010000001	1	0001000010000001	1	1000100000100010	1	1000100000100010	1
246	0000100100010010	1	0000100100010010	1	1000100000010001	1	1000100000010001	1
247	0000100010000010	1	0000100010000010	1	1000010000010010	1	1000010000010010	1
248	0000100100001001	1	0100010010010001	1	0000100100001001	1	0100010010010001	1
249	0000100001000001	1	0000100001000001	1	1000010000001001	1	1000010000001001	1
250	0000010010010010	1	0000010010010010	1	1000001000000010	1	1000001000000010	1
251	0000010001000010	1	0000010001000010	1	1000000100000001	1	1000000100000001	1
252	0000010010001001	1	0100010000100010	1	0000010010001001	1	0100010000100010	1
253	0000010000100001	1	0000010000100001	1	0100100010001001	1	0100100010001001	1
254	0000001001000100	2	0100010000010001	1	1001000000010000	2	0100010000010001	1
255	0000001000001000	2	0100001000010010	1	1000100100010000	2	0100001000010010	1

© ISO/IEC 2004 All rights reserved
Copyright International Organization for Standardization
Reproduced by IHS under license with ISO
No reproduction or networking permitted without license from IHS
Not for Resale

Table G.2 - Substitution table (continued)

8-bit byte	State 1		State 2		State 3		State 4	
	Code Word msb lsb	Next State	Code Word msb lsb	Next State	Code Word msb lsb	Next State	Code Word msb lsb	Next State
0	0000010010000000	4	0000010010000000	4	0100100001001000	2	0100100001001000	2
1	0000100100000000	4	0000100100000000	4	0100100001001000	3	0100100001001000	3
2	0001001000000000	4	0001001000000000	4	0100100000001001	1	0100100000001001	1
3	0000001001000000	4	0100010000000001	1	1000001000000000	4	0100010000000001	1
4	0000000100100000	3	0100100000000010	1	1001000000000100	3	0100100000000010	1
5	0000000010010000	3	0100001000000000	4	1001000000100100	3	0100001000000000	4
6	0000000001001000	3	0100100000000100	2	1001000001001000	3	0100100000000100	2
7	0000000001001000	2	0100000100000000	4	1001000000000100	2	0100000100000000	4
8	0000000010010000	2	0100100010010000	3	1001000000100100	2	0100100010010000	3
9	0000000100100000	2	0100100000100100	2	1001000001001000	2	0100100000100100	2
10	0000010001000000	4	0000010001000000	4	1001001001000000	4	1001001001000000	4
11	0000100010000000	4	0000100010000000	4	1000100001001000	3	1000100001001000	3
12	0001000100000000	4	0001000100000000	4	0100010001001000	3	0100010001001000	3
13	0010001000000000	4	0010001000000000	4	1000100000000100	3	1000100000000100	3
14	0000001000100000	3	0100100000000100	3	1001000010010000	3	0100100000000100	3
15	0000000100010000	3	0100100010010000	2	1001000100100000	3	0100100010010000	2
16	0000000010001000	3	0100001000000001	1	0100100000001000	3	0100001000000001	1
17	0000000001000100	3	0100010000000010	1	0100100010001000	3	0100010000000010	1
18	0000000001000100	2	0100100000100100	3	1001000010010000	2	0100100000100100	3
19	0000000010001000	2	0100100100100000	3	1001000100100000	2	0100100100100000	3
20	0000000100010000	2	0100100100100000	2	0100010001001000	2	0100100100100000	2
21	0000001000100000	2	0100100000010010	1	0100100000001000	2	0100100000010010	1
22	0000010010000001	1	0000010010000001	1	1000100000100100	3	1000100000100100	3
23	0000100100000001	1	0000100100000001	1	1000100010010000	3	1000100010010000	3
24	0001001000000001	1	0001001000000001	1	0100100010001000	2	0100100010001000	2
25	0010010000000001	1	0010010000000001	1	1000100000000100	2	1000100000000100	2
26	0000000001001001	1	0100010000000100	3	1000010000000001	1	0100010000000100	3
27	0000000010010001	1	0100000100000001	1	1000100000000010	1	0100000100000001	1
28	0000000100100001	1	0100010000000100	2	1001000000001001	1	0100010000000100	2
29	0000001001000001	1	0100001000000010	1	1001000000010010	1	0100001000000010	1
30	0000100001000000	4	0000100001000000	4	1000100000100100	2	1000100000100100	2
31	0001000010000000	4	0001000010000000	4	1000100001001000	2	1000100001001000	2
32	0010000100000000	4	0010000100000000	4	0100010000001001	1	0100010000001001	1
33	0000010000100000	3	0000010000100000	3	0100100001001001	1	0100100001001001	1
34	0000001000010000	3	0100010000010010	1	1000100100100000	3	0100010000010010	1
35	0000000100001000	3	0100100000010001	1	1001000000001000	3	0100100000010001	1
36	0000000010000100	3	0100000010000000	4	1001000001000100	3	0100000010000000	4
37	0000010000100000	2	0000010000100000	2	1000001000000001	1	1000001000000001	1
38	0000000010000100	2	0100010000100100	3	1000100010010000	2	0100010000100100	3
39	0000000100001000	2	0100010000100100	2	1000100100100000	2	0100010000100100	2
40	0000001000010000	2	0100100000100010	1	1001000000001000	2	0100100000100010	1
41	0000010001000001	1	0000010001000001	1	1000010000000010	1	1000010000000010	1
42	0000010010000010	1	0000010010000010	1	1000000100000000	4	1000000100000000	4
43	0000100010000001	1	0000100010000001	1	1001000001000100	2	1001000001000100	2
44	0000100100000010	1	0000100100000010	1	1000100000001001	1	1000100000001001	1
45	0001000100000001	1	0001000100000001	1	1001000010001000	3	1001000010001000	3
46	0001001000000010	1	0001001000000010	1	1001000100010000	3	1001000100010000	3

Copyright International Organization for Standardization
Reproduced by IHS under license with ISO
No reproduction or networking permitted without license from IHS
Not for Resale
© ISO/IEC 2004 – All rights reserved

Table G.2 - Substitution table (concluded)

8-bit byte	State 1		State 2		State 3		State 4	
	Code Word msb lsb	Next State	Code Word msb lsb	Next State	Code Word msb lsb	Next State	Code Word msb lsb	Next State
47	0010001000000001	1	0010001000000001	1	1000100000010010	1	1000100000010010	1
48	0010010000000010	1	0010010000000010	1	0100010000001000	3	0100010000001000	3
49	0000000001000010	1	0100100010010001	1	1001000000010001	1	0100100010010001	1
50	0000000010001001	1	0100100001000100	3	1001000000100010	1	0100100001000100	3
51	0000000010010010	1	0100010010010000	3	1001000001001001	1	0100010010010000	3
52	0000000100010001	1	0100010010010000	2	1001000010010001	1	0100010010010000	2
53	0000000100100010	1	0100100001000100	2	1001000100100001	1	0100100001000100	2
54	0000001000100001	1	0100100100100001	1	1001001001000001	1	0100100100100001	1
55	0000001001000010	1	0100100100010000	3	0100001000001001	1	0100100100010000	3
56	0001000001000000	4	0001000001000000	4	1001001000100000	3	1001001000100000	3
57	0010000010000000	4	0010000010000000	4	1001000010001000	2	1001000010001000	2
58	0010010010010000	3	0010010010010000	3	1001000100010000	2	1001000100010000	2
59	0010010001001000	3	0100100100010000	2	0010010001001000	3	0100100100010000	2
60	0010010000100100	3	0010010000100100	3	1001001000100000	2	1001001000100000	2
61	0010010000000100	3	0010010000000100	3	0100001001001000	2	0100001001001000	2
62	0001001001001000	3	0100000010000001	1	0001001001001000	3	0100000010000001	1
63	0001001000100100	3	0001001000100100	3	0100001001001000	3	0100001001001000	3
64	0001001000000100	3	0001001000000100	3	0100010010001000	3	0100010010001000	3
65	0000100100100100	3	0000100100100100	3	0100100100001000	3	0100100100001000	3
66	0000100100000100	3	0000100100000100	3	1000010000000100	3	1000010000000100	3
67	0000100000100000	3	0000100000100000	3	1000010000100100	3	1000010000100100	3
68	0000010010000100	3	0000010010000100	3	1000010001001000	3	1000010001001000	3
69	0000010000010000	3	0000010000010000	3	1000010010010000	3	1000010010010000	3
70	0000001001000100	3	0100001000000100	2	1000100000001000	3	0100001000000100	2
71	0000001000001000	3	0100100000010000	3	1000100010001000	3	0100100000010000	3
72	0000000100100100	3	0100010001000100	3	1000100100010000	3	0100010001000100	3
73	0000000100000100	3	0100001000100100	3	1001000000010000	3	0100001000100100	3
74	0000010000010000	2	0000010000010000	2	1000100001000100	3	1000100001000100	3
75	0001001001001000	2	0100001000000100	3	0001001001001000	2	0100001000000100	3
76	0000010010000100	2	0000010010000100	2	0100010000001000	2	0100010000001000	2
77	0000100000100000	2	0000100000100000	2	0100010010001000	2	0100010010001000	2
78	0010010001001000	2	0100000100000010	1	0010010001001000	2	0100000100000010	1
79	0000100100000100	2	0000100100000100	2	0100100100001000	2	0100100100001000	2
80	0000100100100100	2	0000100100100100	2	1000010000000100	2	1000010000000100	2
81	0001001000000100	2	0001001000000100	2	1000010000100100	2	1000010000100100	2
82	0001001000100100	2	0001001000100100	2	1000010001001000	2	1000010001001000	2
83	0010010000000100	2	0010010000000100	2	1000010010010000	2	1000010010010000	2
84	0010010000100100	2	0010010000100100	2	1000100000001000	2	1000100000001000	2
85	0010010010010000	2	0010010010010000	2	0100010001001001	1	0100010001001001	1
86	0000000100000100	2	0100001000100100	2	1000100001000100	2	0100001000100100	2
87	0000000100100100	2	0100010001000100	2	1000100010001000	2	0100010001000100	2

© ISO/IEC 2004 All rights reserved
Copyright International Organization for Standardization
Reproduced by IHS under license with ISO
No reproduction or networking permitted without license from IHS
Not for Resale

Annex H
(normative)

Definition of the write pulse

The wave forms of the NRZI signal and the shape of light-pulse shall be as shown in figure H.1.

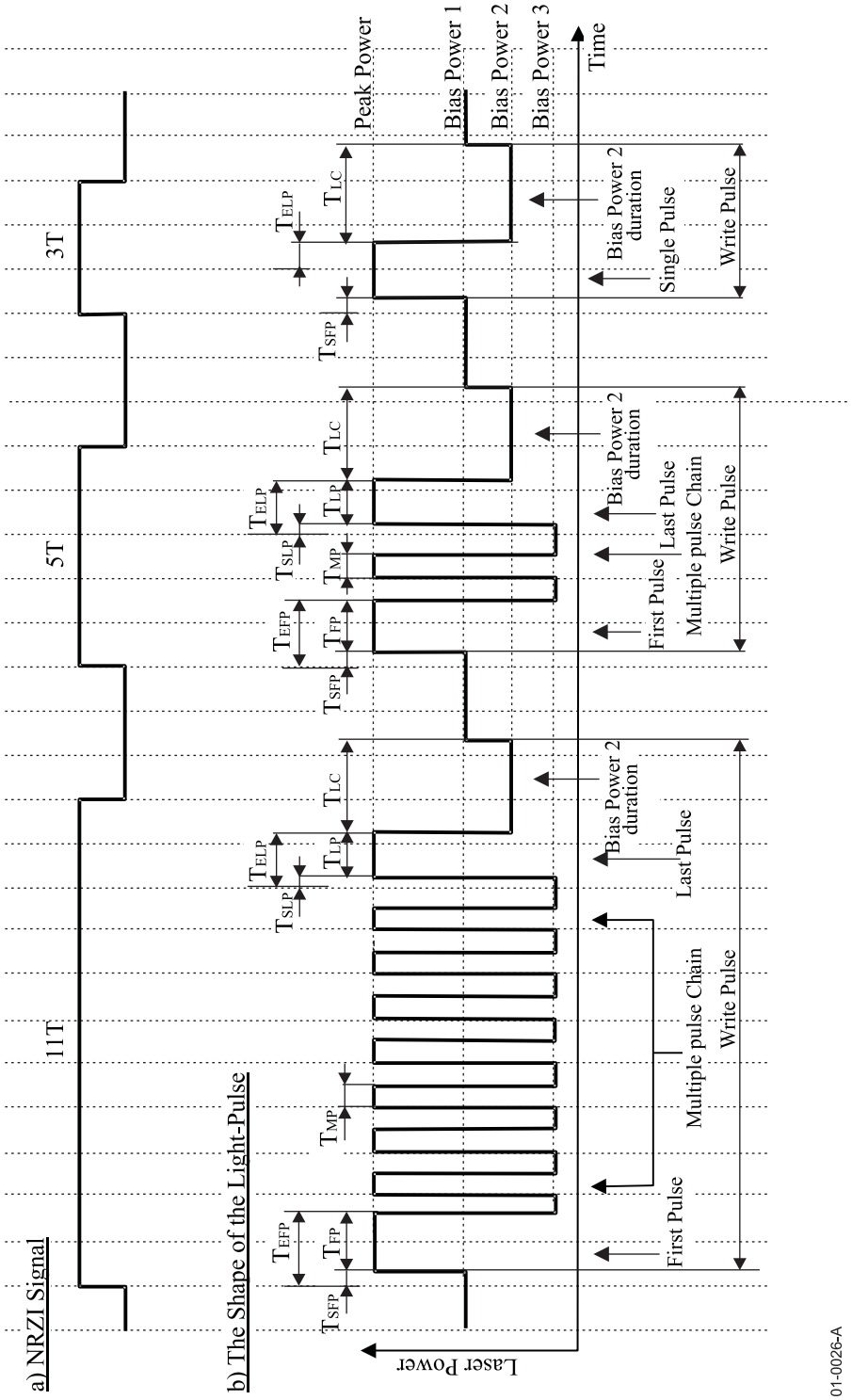

Figure H.1 - The wave form of the Write pulse

© ISO/IEC 2004 – All rights reserved
Copyright International Organization for Standardization
Reproduced by IHS under license with ISO
No reproduction or networking permitted without license from IHS
Not for Resale

Table H.1 - The range of each parameter

	Parameter	Range	Parameter	Range	Note
Common parameter	T_{LC}	+1,0T to +2,5T	T_{MP}	0,5T	
Adaptive control parameters	T_{SFP}	–0,5T to +1,0T	T_{ELP}	0,0T to +1,5T	Values are variable according to NRZI signal combination.
Parameter definition case 1	T_{EFP}	+1,0T to +2,5T	$T_{EFP} - T_{SLP}$	+1,0T to +2,0T	Physical Format Information data for T_{FP} shall be ignored.
	T_{SLP}	–1,0T to +0,5T	$T_{ELP} - T_{SLP}$	+0,5T to +1,5T	Physical Format Information data for T_{LP} shall be ignored.
Parameter definition case 2	T_{FP}	+1,0T to +2,0T	$T_{SFP} + T_{FP}$	+1,0T to +2,5T	Physical Format Information data for T_{EFP} shall be ignored.
	T_{LP}	+0,5T to +1,5T	$T_{ELP} - T_{LP}$	–1,0T to +0,5T	Physical Format Information data for T_{SLP} shall be ignored.

T is the channel clock period.

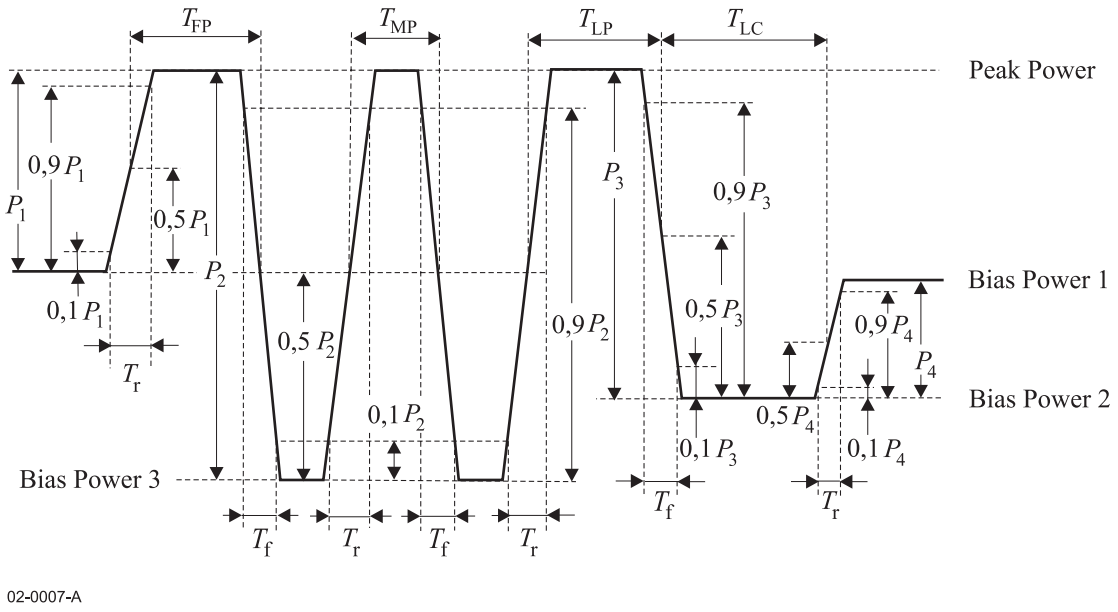

Figure H.2 - Definition of the light-pulse shape

© ISO/IEC 2004 All rights reserved
Copyright International Organization for Standardization
Reproduced by IHS under license with ISO
No reproduction or networking permitted without license from IHS
Not for Resale

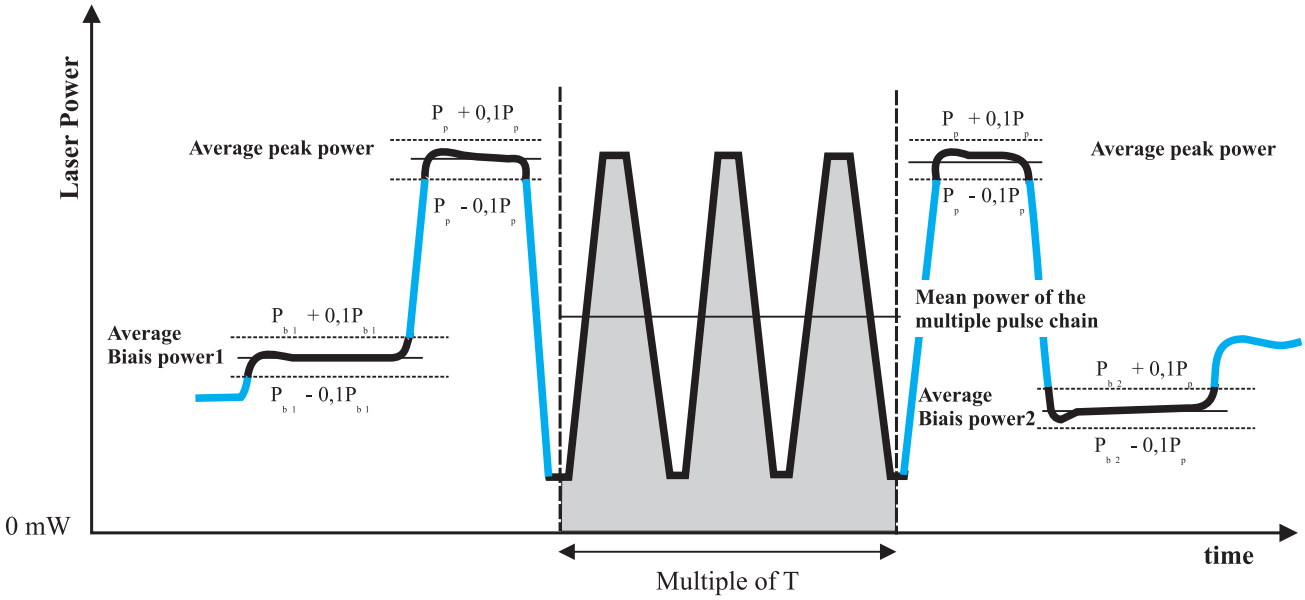

01-0040-A

P_p: Given Peak power

P_{b1}: Given Bias power 1

P_{b2}: Given Bias power 2

Figure H.3 - Definition of the average Peak power, the average Bias power1, the average Bias power2 and the mean power of the multiple pulse chain

© ISO/IEC 2004 – All rights reserved
Copyright International Organization for Standardization
Reproduced by IHS under license with ISO
No reproduction or networking permitted without license from IHS
Not for Resale

Annex J
(normative)

Burst Cutting Area (BCA)

J.1 General

The Burst Cutting Area is an optional feature. If implemented, it shall meet the requirement of this annex.

The purpose of the code recorded in the BCA is to provide a link between the content of a disk and the software to be used with that disk. Therefore, only the structure of this code is specified in this annex and not the content of the data bytes. The latter is to be supplied by the content provider of the disk. The BCA code can be the same for a series of disks or unique for each disk, for instance if it specifies a serial number. The BCA code is recorded after the end of the disk manufacturing process.

The BCA code shall be readable by means of the Optical Head specified in 9.1.

J.2 Location of the BCA

The BCA is an annular area that shall extend between diameters $D_{min.}$ and $D_{max.}$.

$$D_{min.} = 44{,}6 \text{ mm} \begin{matrix} +0{,}0 \text{ mm} \\ - 0{,}8 \text{ mm} \end{matrix}$$

$$D_{max.} = 47{,}0 \text{ mm} \begin{matrix} +0{,}1 \text{ mm} \\ -0{,}1 \text{ mm} \end{matrix}$$

If the BCA is implemented, the start of the Lead-in Zone shall not exceed a diameter equal to 44,5 mm.

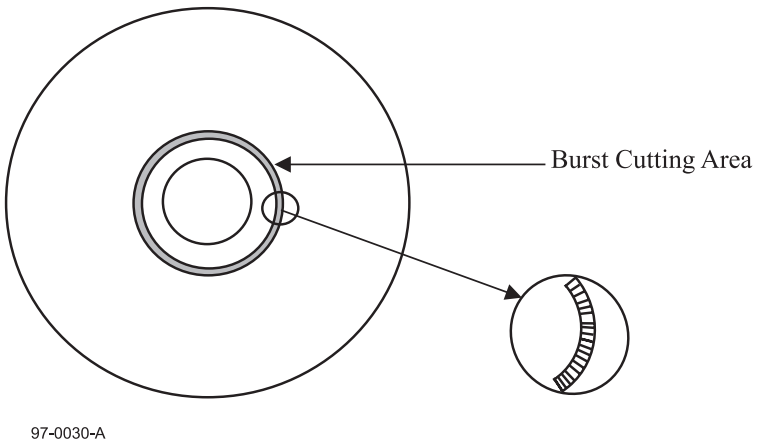

Figure J.1 - Burst Cutting Area

© ISO/IEC 2004 All rights reserved
Copyright International Organization for Standardization
Reproduced by IHS under license with ISO
No reproduction or networking permitted without license from IHS
Not for Resale

J.3 Writing form

The BCA code shall be written with a series of low reflectance stripes arranged in circumferential direction and extending radially between $R_{max.}$ and $R_{min.}$, see figure J.1.

J.4 Modulation method

Data intended for the BCA code shall be encoded by phase encoding according to which a ZERO bit is represented by two Channel bits set to ONE ZERO and a ONE bit by two Channel bits set to ZERO ONE. The sequence of Channel bits shall be modulated according to the Return-to-Zero modulation method (see figure J.4). The low reflectance stripes shall be formed corresponding to pulses after the RZ modulation. They shall not exceed half the width of a Channel bit.

J.5 BCA code structure

The BCA code shall consist of a Preamble, a Data Field and a Postamble.

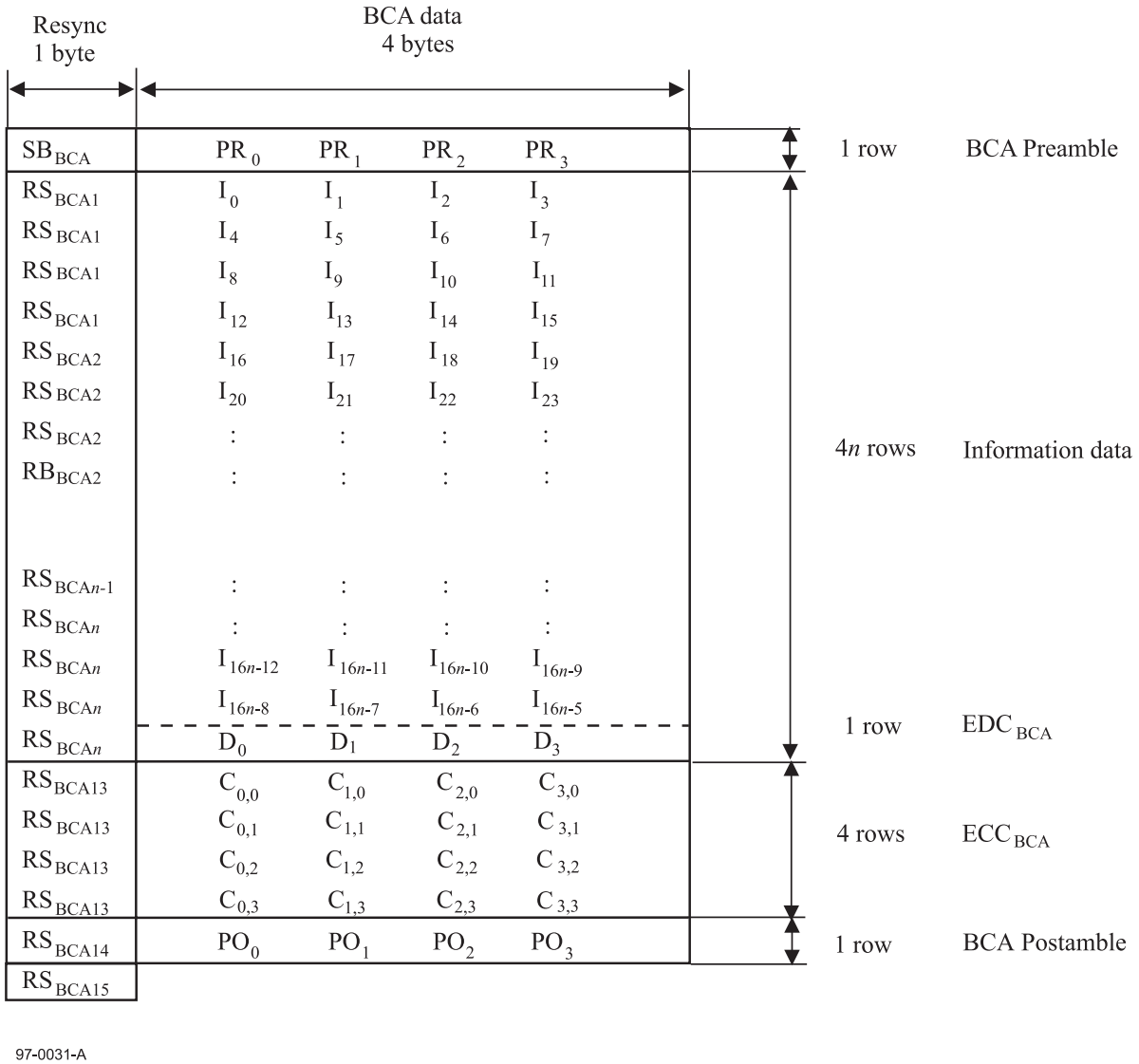

Figure J.2 - BCA Code Structure

© ISO/IEC 2004 – All rights reserved
Copyright International Organization for Standardization
Reproduced by IHS under license with ISO
No reproduction or networking permitted without license from IHS
Not for Resale

J.5.1 BCA Preamble

The BCA Preamble shall consist of 4 bytes PR_0 to PR_3 set to (00) preceded by a BCA Sync byte identified as SB_{BCA}.

J.5.2 BCA Data Field

The Data field of the BCA shall consist of

- $(16 \times n)$ - 4 information bytes I_0, I_1 ....I_{16n-5}

  where n is an integer such that $1 \leq n \leq 12$,
- 4 bytes D_0, D_1, D_2 and D_3 of an error detection code EDC_{BCA},
- 16 bytes $C_{i,j}$ of an error correction code ECC_{BCA} recorded in the order $C_{0,0}$ to $C_{3,0}$; $C_{0,1}$ to $C_{3,1}$; $C_{0,2}$ to $C_{3,2}$ and $C_{0,3}$ to $C_{3,3}$,
- a Resync byte RS_{BCAi} shall be inserted before each 4-byte row of I_i bytes, changing every 4th row (see figure J.3).

J.5.3 BCA Postamble

The BCA Postamble shall consist of 4 bytes PO_0 to PO_3 set to (55) and preceded by Resync byte RS_{BCA14} and followed by Resync byte RS_{BCA15}.

J.6 Error Detection Code EDC_{BCA}

The 4 bytes D_0 to D_3 shall follow the information bytes I_i. Polynomials $EDC_{BCA}(x)$ and $I_{BCA}(x)$ shall be as follows:

$$EDC_{BCA}(x) = \sum_{i=0}^{31} b_i x^i$$

$$I_{BCA}(x) = \sum_{i=32}^{128n-1} b_i x^i$$

where, i is the bit number starting with 0 and incremented from the LSB of the last byte of EDC_{BCA} toward the MSB of the first byte of the information data, and bi represents the value of i-th bit.

The polynomial $EDC_{BCA}(x)$ shall be calculated as follows:

$$EDC_{BCA}(x) = I_{BCA}(x) \bmod G(x)$$

where, $G(x) = x^{32} + x^{31} + x^4 + 1$.

J.7 BCA Error Correction Code (ECC_{BCA})

A Reed-Solomon type ECC with 4-way interleaving shall be used for the information data and the BCA Error Detection Code. Polynomials $R_{BCAj}(X)$ and $I_{BCAj}(X)$ are defined as follows:

© ISO/IEC 2004 All rights reserved

Copyright International Organization for Standardization
Reproduced by IHS under license with ISO
No reproduction or networking permitted without license from IHS
Not for Resale

$$R_{BCAj}(x) = \sum_{i=0}^{3} C_{j,i}\, x^{3-i}$$

$$I_{BCAj}(x) = \sum_{i=0}^{4n-2} I_{(j+4i)}\, x^{51-i} + D_j\, x^{52-4n}$$

where, Im represents the value of the m-th information data byte and D_k represents the value of k-th EDC_{BCA} byte.

The polynomial $R_{BCAj}(X)$ shall be calculated as follows:

$$R_{BCAj}(X) = I_{BCAj}(X) \bmod Gp_{BCA}(X)$$

$$G_{pBCA}(x) = \prod_{k=0}^{3} (x + \alpha^k)$$

where, α represents the root of the polynomial

$$Gp(X) = X^8 + X^4 + X^3 + X^2 + 1.$$

J.8 BCA-Sync-Byte (SB_{BCA}) and BCA-Resync (RS_{BCA})

The BCA-Sync-Byte (SB_{BCA}) precedes the BCA-Preamble. The BCA-Resync (RS_{BCA}) shall be inserted before every 4 information bytes, before the EDC_{BCA}, before the ECC_{BCA}, and before and after the BCA-Postamble.

The BCA-Sync-Byte and the BCA-Resync shall have patterns (table J.1).

Table J.1 - Bit pattern of BCA-Sync-Byte and BCA-Resync

Sync Byte /Resync	Bit pattern	
	Fixed pattern	Sync code
	(Channel bit) C_{15} C_{14} C_{13} C_{12} C_{11} C_{10} C_9 C_8	(Data bit) b_3 b_2 b_1 b_0
SB_{BCA}	0 1 0 0 0 1 1 0	0 0 0 0
RS_{BCA1}	0 1 0 0 0 1 1 0	0 0 0 1
RS_{BCA2}	0 1 0 0 0 1 1 0	0 0 1 0
: : :	:	:
RS_{BCAi}	0 1 0 0 0 1 1 0	i
: : :	:	:
RS_{BCA15}	0 1 0 0 0 1 1 0	1 1 1 1
	Recorded in RZ modulation	Recorded in PE-RZ modulation

© ISO/IEC 2004 – All rights reserved
Copyright International Organization for Standardization
Reproduced by IHS under license with ISO
No reproduction or networking permitted without license from IHS
Not for Resale

J.9 BCA signal specification

J.9.1 Signals from BCA

A reference circuit diagram for measuring the BCA signal is as shown in figure J.3. During the measurement of the BCA signal, the focus of the optical beam shall follow the recording layer. The signal from Read channel 1 in the BCA area shall be filtered by a third order low pass Butterworth filter with a cut-off frequency of 1,2 MHz (LPF_B), amplified by an inverting amplifier and filtered by a high pass linear filter with a cut-off frequency of 14 kHz (HPF_B).

A binarized BCA signal is then produced by comparing the signal from the HPF_B and the signal from a peak hold with a time constant of 320 μsec.

J.9.2 Signal specifications of the BCA signal

The following specifications are specified between 22,40 mm and 23,30 mm from the center of the center hole.

a) Modulated amplitude

The average level of the signal from LPF_B corresponding to a BCA-Code channel bit 0b (BCA space) is defined as I_{BS}. The bottom level of the signal from LPF_B corresponding to a BCA-Code channel bit 1b (BCA mark) is defined as I_{BM}. The peak level of the signal from LPF_B is defined as IBRmax. (Figure J.4).

The above parameters shall satisfy the following specifications:

$$\frac{I_{BMmax}}{I_{BSmin}} \leq 0,8$$

$$\frac{I_{BRmax}}{I_{BS}} \leq 1,5$$

b) The period of a BCA-Code channel bit

The period of a BCA-Code channel bit shall be measured as the time period between leading edges of the binarized BCA signal. The period of a BCA-Code channel bit shall be 3,94 μsec at a rotation speed of 3246 rpm (54,10 Hz). The slice level for binarizing the BCA signal shall be set to the center of $I_{BSmin.}$ and $I_{BMmax.}$ of the signal form HPF_B.

c) Jitter

The jitter is defined as the standard deviation σ_B of the time variation of the binarized BCA signal.

The jitter between successive leading edges shall not exceed 8,5 %.

© ISO/IEC 2004 All rights reserved
Copyright International Organization for Standardization
Reproduced by IHS under license with ISO
No reproduction or networking permitted without license from IHS
Not for Resale

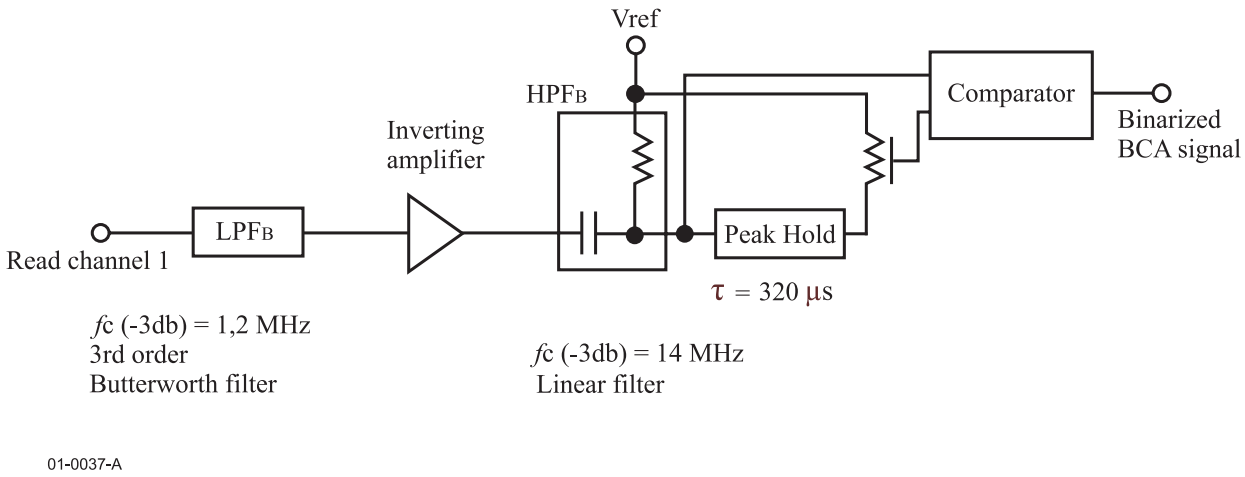

Figure J.3 - Circuit diagram for BCA signal measurement

Copyright International Organization for Standardization
Reproduced by IHS under license with ISO
No reproduction or networking permitted without license from IHS
Not for Resale
© ISO/IEC 2004 – All rights reserved

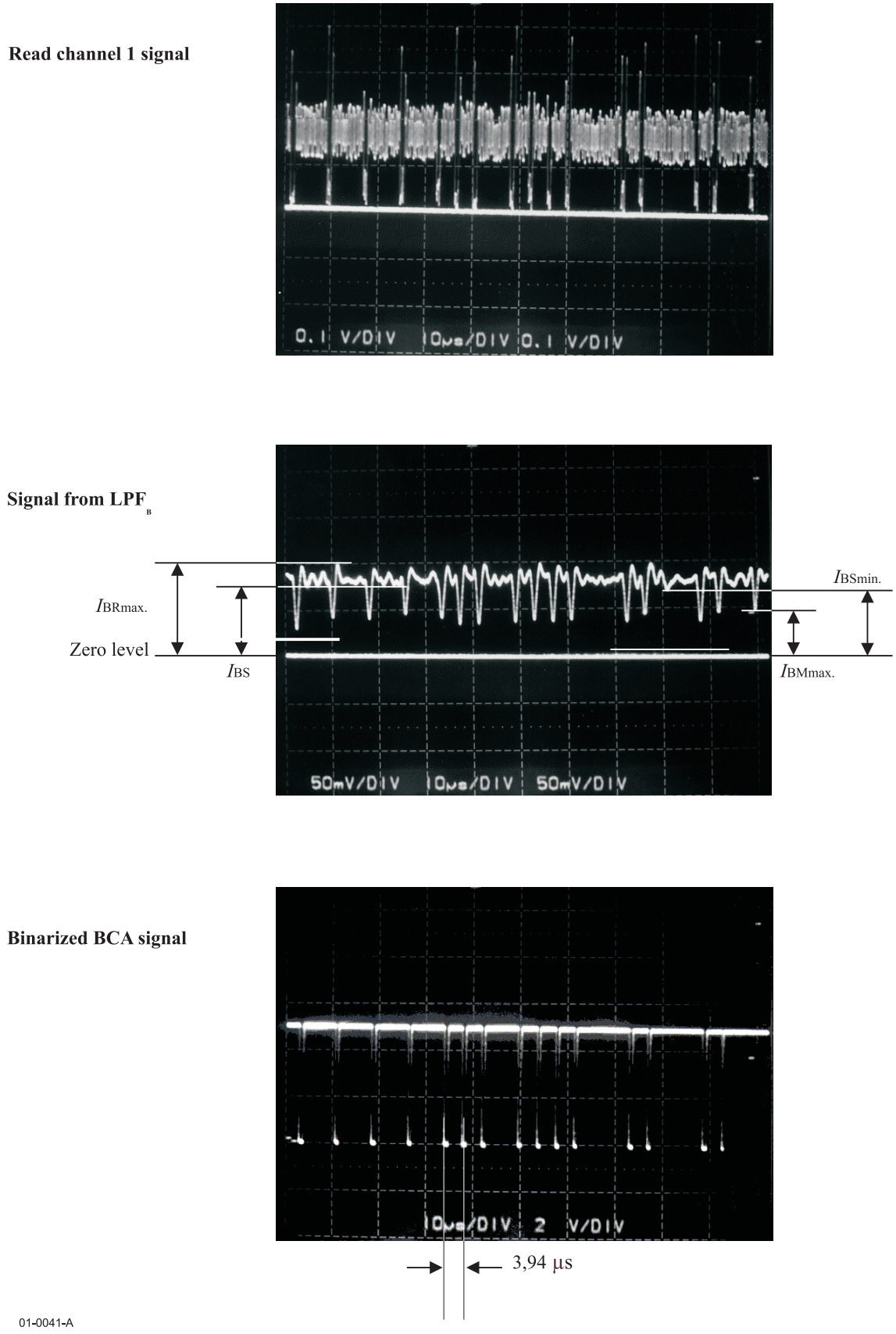

Figure J.4 - Waveforms from the BCA signal

© ISO/IEC 2004 All rights reserved
Copyright International Organization for Standardization
Reproduced by IHS under license with ISO
No reproduction or networking permitted without license from IHS
Not for Resale

J.10 Logical format of information data

The BCA-Data field has 16*n*-4 bytes of the information data I_0, I_1, …, I_{16n-5} as specified in J.5.2. This information data shall be recorded on a unit of BCA Record. The length of BCA Record shall be a multiple of 4. Each BCA Record shall consist of the BCA Record ID, the Version number field, a Data length field and a Record data field as shown in table J.2, where *m* is a positive integer.

Table J.2 – BCA Record format

Relative Byte Position (RBP)	Contents	Number of bytes
0 to 1	BCA Record ID	2
2	Version number	1
3	Data length	1
4 to 4*m*+3	Record data	4*m*

RBP 0 to 1 – BCA Record ID

This field shall be the BCA Record ID assigned uniquely for each BCA Record.

RBP 2 – Version number

This field shall be the Version number assigned for each BCA Record independently.

RBP 3 – Data length

This field shall specify the length of the Record data.

RBP 4 to 4*m*+3 – Record data

The length of this field shall be a multiple of 4 and shall contain the Record data only.

The BCA Record ID shall be classified into two categories as shown in table J.3.

Table J.3 – Categories of the BCA Record ID

BCA Record ID	Definition
(0000) to (7FFF)	Assigned for authorized applications
(8000) to (FFFF)	Assigned for notified applications

When two or more BCA Records are recorded in the BCA-Data field, each BCA Record shall have a different BCA Record ID and shall be recorded in ascending order of the BCA Record ID. The trailing ZEROs may be padded in order to achieve 16*n*-4 bytes of the Information data. An example of the Information data is shown in table J.4.

Table J.4 – An example of the Information data

Byte position	Contents	Number of bytes
0 to 11	BCA Record No. 1 (Record data length is 8 bytes)	12
12 to 31	BCA Record No. 2 (Record data length is 16 bytes)	20
32 to 43	Trailing ZEROs	12

© ISO/IEC 2004 – All rights reserved
Copyright International Organization for Standardization
Reproduced by IHS under license with ISO
No reproduction or networking permitted without license from IHS
Not for Resale

Annex K
(informative)

Guideline for randomization of the Gap length, the Guard 1 length and the recording polarity

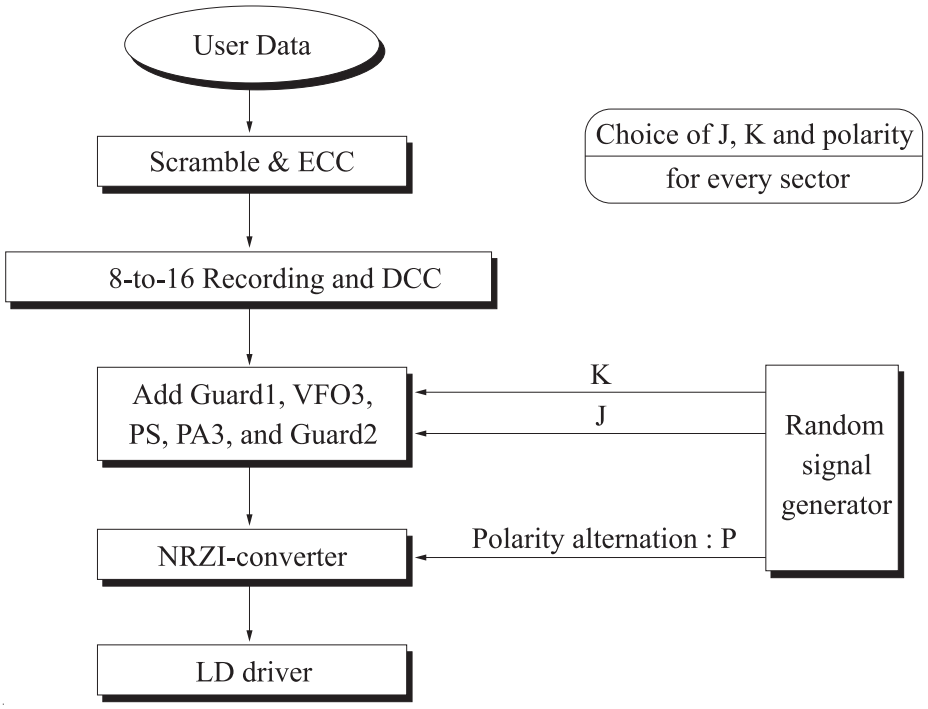

Figure K.1 - Guideline for randomization of the Gap length, the Guard 1 length and the recording polarity

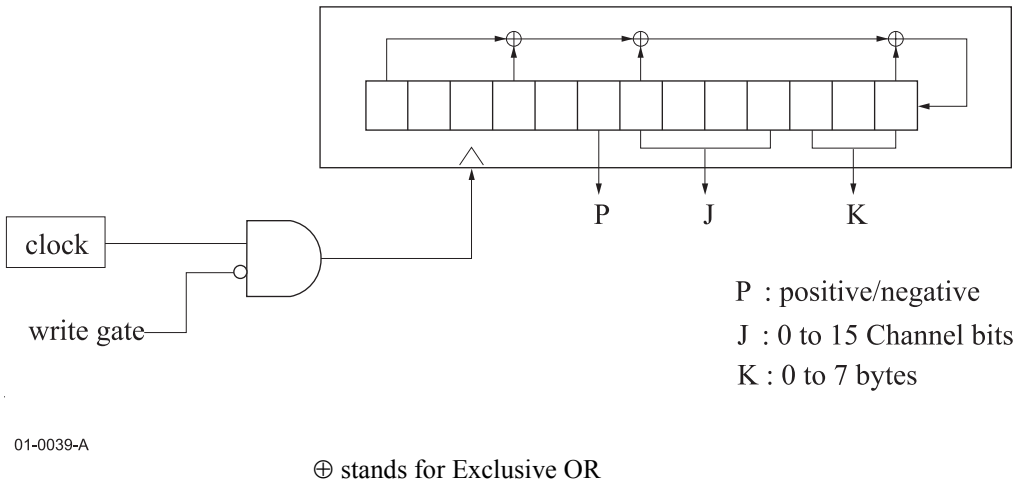

Figure K.2 - Example of a random signal generator

© ISO/IEC 2004 All rights reserved
Copyright International Organization for Standardization
Reproduced by IHS under license with ISO
No reproduction or networking permitted without license from IHS
Not for Resale

Annex L
(informative)

Transportation

L.1 General

As transportation occurs under a wide range of temperature and humidity variations, for differing periods, by many methods of transport and in all parts of the world, it is not possible to specify mandatory conditions for transportation or for packaging.

L.2 Packaging

The form of packaging should be agreed between sender and recipient or, in absence of such an agreement, is the responsibility of the sender. It should take into account the following hazards:

L.2.1 Temperature and humidity

Insulation and wrapping should be designed to maintain the conditions for storage over the estimated period of transportation.

L.2.2 Impact loads and vibrations

Avoid mechanical loads that would distort the shape of the disk.

Avoid dropping the disk.

Disks should be packed in a rigid box containing adequate shock-absorbent material.

The final box should have a clean interior and a construction that provides sealing to prevent the ingress of dirt and moisture.

© ISO/IEC 2004 – All rights reserved
Copyright International Organization for Standardization
Reproduced by IHS under license with ISO
No reproduction or networking permitted without license from IHS
Not for Resale

Annex M
(informative)

Guideline for sector replacement

Clause 17 assumes that a defective sector will be replaced by the defect management. The followings are examples of the criteria which could be applied by the defect management.

1) Example 1

PID error: There are 3 or more erroneous PIDs within a sector.

Row error: There are 4 or more erroneous bytes in a row of an ECC Block.

Slipping Algorithm

If a sector presents a PID error, it should be replaced.

If a sector presents 4 or more row errors, it should be replaced.

If an ECC Block presents 6 or more row errors, then enough sectors should be slipped so as to reduce the number of row errors in the ECC Block to less than 6.

Linear Replacement Algorithm

If an ECC Block presents 1 or more sectors containing a PID error, then the whole ECC Block should be replaced.

If an ECC Block presents 8 or more row errors, then the whole ECC Block should be replaced.

2) Example 2

PID error: There are 4 erroneous PIDs within a sector.

Row error: There are 4 or more erroneous bytes in a row of an ECC Block.

Slipping replacement algorithm

If a sector contains a PID error, then it should be replaced.

If a sector contains 4 or more row errors, then it should be replaced.

If an ECC Block contains 6 or more row errors, then enough sectors should be slipped so as to reduce the number of row errors in the ECC Block to less than 6.

Linear Replacement Algorithm

If an ECC Block contains 2 or more sectors with a PID error, then the whole ECC Block should be replaced.

If an ECC Block contains 8 or more row errors, then the whole ECC Block should be replaced.

--`,`-`-`,,`,,`,`,,`---
© ISO/IEC 2004 All rights reserved
Copyright International Organization for Standardization
Reproduced by IHS under license with ISO
No reproduction or networking permitted without license from IHS
Not for Resale

ICS 35.220.30

Price based on 129 pages

© ISO/IEC 2004 – All rights reserved
Copyright International Organization for Standardization
Reproduced by IHS under license with ISO
No reproduction or networking permitted without license from IHS
Not for Resale