INTERNATIONAL STANDARD

ISO/IEC 17345

Second edition
2006-12-01

Information technology — Data Interchange on 130 mm Rewritable and Write Once Read Many Ultra Density Optical (UDO) Disk Cartridges — Capacity: 30 Gbytes per Cartridge — First Generation

Technologies de l'information — Échange de données sur cartouches de disques de 130 mm de diamètre, pour réécriture et pour "write once read many", de densité ultra-optique (UDO) — Capacité: 30 Go par cartouche — Première génération

Reference number
ISO/IEC 17345:2006(E)

© ISO/IEC 2006

Copyright International Organization for Standardization
Provided by IHS under license with ISO
No reproduction or networking permitted without license from IHS

Not for Resale

PDF disclaimer

This PDF file may contain embedded typefaces. In accordance with Adobe's licensing policy, this file may be printed or viewed but shall not be edited unless the typefaces which are embedded are licensed to and installed on the computer performing the editing. In downloading this file, parties accept therein the responsibility of not infringing Adobe's licensing policy. The ISO Central Secretariat accepts no liability in this area.

Adobe is a trademark of Adobe Systems Incorporated.

Details of the software products used to create this PDF file can be found in the General Info relative to the file; the PDF-creation parameters were optimized for printing. Every care has been taken to ensure that the file is suitable for use by ISO member bodies. In the unlikely event that a problem relating to it is found, please inform the Central Secretariat at the address given below.

© ISO/IEC 2006

All rights reserved. Unless otherwise specified, no part of this publication may be reproduced or utilized in any form or by any means, electronic or mechanical, including photocopying and microfilm, without permission in writing from either ISO at the address below or ISO's member body in the country of the requester.

ISO copyright office
Case postale 56 • CH-1211 Geneva 20
Tel. + 41 22 749 01 11
Fax + 41 22 749 09 47
E-mail copyright@iso.org
Web www.iso.org

Published in Switzerland

--`,,```,,,,````-`-`,,`,,`,`,,`---

Copyright International Organization for Standardization
Provided by IHS under license with ISO
No reproduction or networking permitted without license from IHS

© ISO/IEC 2006 – All rights reserved

Not for Resale

Contents

Page

Foreword vii

Introduction viii

Section 1 — General 1

1 Scope 1

2 Conformance 2
2.1 Optical disk 2
2.2 Generating system 2
2.3 Receiving system 2
2.4 Compatibility statement 2

3 Normative references 2

4 Terms and definitions 2

5 Conventions and notations 6
5.1 Representation of numbers 6
5.2 Names 6

6 Acronyms 6

7 General description 7

8 General requirement 8
8.1 Environments 8
8.2 Temperature shock 9
8.3 Safety requirements 9
8.4 Flammability 9

9 Reference Drive 9
9.1 Optical system 9
9.2 Optical beam 10
9.3 Read Channel 11
9.4 Tracking 11
9.5 Rotation of the disk 11

Section 2 — Mechanical and physical characteristics 11

10 Dimensional and physical characteristics of the case 11
10.1 General description of the case 11
10.2 Relationship of Sides A and B 11
10.3 Reference axes and case reference planes 12
10.4 Case drawings 12
10.5 Dimensions of the case 12
10.6 Mechanical characteristics 19
10.7 Drop test 20
10.8 Electro-static discharge test 20

11 Dimensional, mechanical, and physical characteristics of the disk 31
11.1 General description of the disk 31
11.2 Reference axis and plane of the disk 32
11.3 Dimensions of the disk 32
11.4 Mechanical characteristics 34
11.5 Optical characteristics 36

12 Interface between cartridge and drive 37
12.1 Clamping method 37

© ISO/IEC 2006 – All rights reserved

Copyright International Organization for Standardization
Provided by IHS under license with ISO
No reproduction or networking permitted without license from IHS
Not for Resale

12.2 Clamping force 37
12.3 Capture cylinder 38
12.4 Disk position in operating condition 38

Section 3 — Format of information 40

13 Track and Header geometry 40
13.1 Track and Header shape 40
13.2 Wobble groove 41
13.3 Mirror Area 41
13.4 Direction of spiral 41
13.5 Track pitch 41
13.6 Physical Track number 42

14 Track format 43
14.1 Physical Track layout 43
14.2 Physical Block Address (PBA) 43
14.3 Sectors with Mirror Area 46
14.4 Radial alignment 47

15 Sector format 47
15.1 Sector layout 47
15.2 IDL, IDG 49
15.3 Blank fields 50
15.4 Quadrature Wobble Marks (QWM) 50
15.5 Gap 51
15.6 Guard 51
15.7 Verify and Protect (VAP) 52
15.8 VFO1, VFO2 52
15.9 Sync 53
15.10 Data field 53
15.11 Postamble (PA) 54
15.12 Buffer 54
15.13 Transition Area (TA) 55

16 Recording codes 55
16.1 Preformatted Header 55
16.2 Data field 55

17 Formatted Zone 57
17.1 General description of the Formatted Zone 57
17.2 Division of the Formatted Zone 57
17.3 Drive test data patterns 64
17.4 SDI Zones usage 64
17.5 DDS Zones Usage 66

18 Layout of the User Zones 67
18.1 General description of the User Zones 67
18.2 Divisions of the User Zones 67
18.3 User Area 67
18.4 Defect Management Area (DMA) 69
18.5 Disk Definition Structure (DDS) 71

19 Defect Management in the Rewritable (RW) and Write Once Read Many (WORM) Zones 73
19.1 Initialization of the disk 73
19.2 Certification 73
19.3 Disk not certified 74
19.4 Write procedure 75
19.5 Primary Defect List (PDL) format and content 75
19.6 Secondary Defect List (SDL) format and content 76

Section 4 — Characteristics of embossed information 77

20 Embossed information – Method of testing 77
20.1 Environment 77

--`,,```,,,,````-`-`,,`,,`,`,,`---

© ISO/IEC 2006 – All rights reserved
Copyright International Organization for Standardization
Provided by IHS under license with ISO
No reproduction or networking permitted without license from IHS
Not for Resale

20.2 Use of the Reference Drive **77**
20.3 Definition of signals **78**

21 Signals from grooves and lands **79**
21.1 Ratio of groove to land signal **79**
21.2 Ratio of groove/land to Mirror Area signal **79**
21.3 Divided push-pull signal **80**
21.4 Wobble signal **80**
21.5 Phase depth **81**
21.6 Track location **81**

22 Signals from Headers **81**
22.1 Reference reflectance I_{top} **81**
22.2 Address Mark and ID signals **81**
22.3 QWM signals **82**
22.4 Timing mean and jitter **83**

Section 5 — Characteristics of the recording layer **83**

23 Method of testing **83**
23.1 Environment **83**
23.2 Reference Drive **83**
23.3 Write conditions **84**
23.4 Erase power for Type RW media **86**
23.5 Read power damage **86**

24 Phase Change characteristics **86**
24.1 Mark polarity **86**
24.2 Rewrite cycles for Type RW media **86**

25 Write characteristics **86**
25.1 Resolution **86**
25.2 Narrow-Band Signal-to-Noise Ratio (NBSNR) **87**
25.3 Cross-talk ratio **88**
25.4 Timing mean **88**
25.5 Timing jitter **89**
25.6 Asymmetry **89**

26 Erase power determination for Type RW media **89**
26.1 Cross-Erase for Type RW Media **90**

Section 6 — Characteristics of user data **91**

27 User Data – Method of testing **91**
27.1 Environment **91**
27.2 Reference Drive **91**

28 Minimum quality of a sector **92**
28.1 Headers ID **92**
28.2 User-written data **93**
28.3 Wobble signal **93**

29 Data interchange requirements **93**
29.1 Tracking **93**
29.2 User-written data **93**
29.3 Quality of disk **93**

Annex A (normative) **Air cleanliness class 100 000** **94**

Annex B (normative) **Edge distortion test** **96**

Annex C (normative) **Compliance test** **98**

Annex D (normative) **Cartridge electro-static discharge test** **101**

Annex E (normative) **Test method for measuring the adsorbent force of the hub** **102**

Annex F (normative) **CRC for ID fields** **104**

© ISO/IEC 2006 – All rights reserved

Copyright International Organization for Standardization
Provided by IHS under license with ISO
No reproduction or networking permitted without license from IHS
Not for Resale

Annex G (normative) **Data field scrambler implementation** **105**
Annex H (normative) **Interleave, CRC, ECC, Resync, and Reference for the Data field** **107**
Annex I (normative) **Drive Information Record (DIR) usage** **112**
Annex J (normative) **Determination of the Resync and Reference patterns** **114**
Annex K (normative) **Specific Disk Information** **116**
Annex L (normative) **Read Channel for measuring analog signals and jitter** **132**
Annex M (normative) **Timing mean and timing jitter measuring procedure** **133**
Annex N (normative) **Implementation Independent Mark Quality Determination (IIMQD) for the interchange of recorded media** **134**
Annex O (normative) **Definition of the write pulse shape** **136**
Annex P (normative) **Asymmetry measuring definition** **137**
Annex Q (normative) **Enhanced Selective Inter-Symbol Interference Cancellation (ESISIC) algorithm** **138**
Annex R (normative) **Requirements for interchange** **140**
Annex S (informative) **Office environment** **142**
Annex T (informative) **Derivation of the operating climatic environment** **143**
Annex U (informative) **Transportation** **148**
Annex V (informative) **Track deviation measurement** **149**
Annex W (informative) **Measurement of the vertical birefringence of the cover layer** **153**
Annex X (informative) **Quadrature Wobble offset control** **154**
Annex Y (informative) **Start Position Shift (SPS) implementation** **157**
Annex Z (informative) **Sector retirement guidelines** **158**
Annex AA (informative) **Guidelines for the use of Type WORM ODCs** **159**
Annex BB (informative) **Media type identification in existing and future standards** **160**
Annex CC (informative) **Laser power calibration for evaluation of media power parameters** **161**

Copyright International Organization for Standardization
Provided by IHS under license with ISO
No reproduction or networking permitted without license from IHS
© ISO/IEC 2006 – All rights reserved
Not for Resale

Foreword

ISO (the International Organization for Standardization) and IEC (the International Electrotechnical Commission) form the specialized system for worldwide standardization. National bodies that are members of ISO or IEC participate in the development of International Standards through technical committees established by the respective organization to deal with particular fields of technical activity. ISO and IEC technical committees collaborate in fields of mutual interest. Other international organizations, governmental and non-governmental, in liaison with ISO and IEC, also take part in the work. In the field of information technology, ISO and IEC have established a joint technical committee, ISO/IEC JTC 1.

International Standards are drafted in accordance with the rules given in the ISO/IEC Directives, Part 2.

The main task of the joint technical committee is to prepare International Standards. Draft International Standards adopted by the joint technical committee are circulated to national bodies for voting. Publication as an International Standard requires approval by at least 75 % of the national bodies casting a vote.

Attention is drawn to the possibility that some of the elements of this document may be the subject of patent rights. ISO and IEC shall not be held responsible for identifying any or all such patent rights.

ISO/IEC 17345 was prepared by Ecma TC 31 (as ECMA-350) and was adopted, under a special “fast-track procedure”, by Joint Technical Committee ISO/IEC JTC 1, *Information technology*, in parallel with its approval by national bodies of ISO and IEC.

This second edition cancels and replaces the first edition (ISO/IEC 17345:2005), which has been technically revised.

--`,,```,,,,````-`-`,,`,,`,`,,`---

© ISO/IEC 2006 – All rights reserved

Copyright International Organization for Standardization
Provided by IHS under license with ISO
No reproduction or networking permitted without license from IHS
Not for Resale

Introduction

Ecma Technical Committee TC 31 was established in 1984 for the standardization of Optical Disks and Optical Disk Cartridges (ODC). Since its establishment, the Committee has made major contributions to ISO/IEC JTC 1/SC 23 toward the development of International Standards for optical disks with a diameter of 80 mm, 90 mm, 120 mm, 130 mm, 300 mm and 356 mm. Numerous standards have been developed by TC 31 and published by Ecma, almost all of which have also been adopted by ISO/IEC under the fast-track procedure as International Standards. The following International Standards for 130 mm disks have been published by Ecma and adopted by ISO/IEC JTC 1: ISO/IEC 11560:1992, ISO/IEC 13481:1993, ISO/IEC 13549:1993, ISO/IEC 13842:1995, ISO/IEC 15486:1998, ISO/IEC 18093:1999, ISO/IEC 22092:2002.

This International Standard specifies two types of double-sided ODCs — Rewritable (Type RW) and Write Once Read Many (Type WORM), both using thermo-optical Phase Change effects.

Copyright International Organization for Standardization
Provided by IHS under license with ISO
No reproduction or networking permitted without license from IHS
Not for Resale

© ISO/IEC 2006 – All rights reserved

Information technology — Data Interchange on 130 mm Rewritable and Write Once Read Many Ultra Density Optical (UDO) Disk Cartridges — Capacity: 30 Gbytes per Cartridge — First Generation

Section 1 — General

1 Scope

This International Standard specifies the mechanical, physical, and optical characteristics of a 130 mm optical disk cartridge (ODC) that employs thermo-optical Phase Change effects to enable data interchange between such disks.

This International Standard specifies two types:

- Type RW (Rewritable) provides for data to be written read and erased many times over the recording surfaces of the disk.

- Type WORM (Write Once Read Many) provides for data once written to be read a multiplicity of times. This type uses a Write Once Read Many times recording material (written marks cannot be erased and attempted modifications of the written marks are detectable). Multisession (incremental write operations) recording may be performed on Type WORM disks.

The disk is two-sided with a nominal capacity of 15,0 Gbytes per side and the cartridge (two sides) provides a nominal capacity of 30,0 Gbytes.

This International Standard specifies:

- the conditions for conformance testing and the Reference Drive;

- the environments in which the cartridges are to be operated and stored;

- the mechanical, physical and dimensional characteristics of the cartridge so as to provide mechanical interchangeability between data processing systems;

- the format of the information on the disk, both embossed and user-written, including the physical disposition of the tracks and sectors, the error correction codes, the modulation methods used;

- the characteristics of the embossed information on the disk;

- the thermo-optical characteristics of the disk, enabling processing systems to write data onto the disk; and

- the minimum quality of user-written data on the disk, enabling data processing systems to read data from the disk.

This International Standard provides for interchange between optical disk drives. Together with a standard for volume and file structure, it provides for full data interchange between data processing systems.

© ISO/IEC 2006 – All rights reserved

Copyright International Organization for Standardization
Provided by IHS under license with ISO
No reproduction or networking permitted without license from IHS
Not for Resale

2 Conformance

2.1 Optical disk

An ODC shall be in conformance with this International Standard if it meets all mandatory requirements specified therein.

A claim of conformance with this International Standard shall specify the Type, RW, WORM, implemented.

2.2 Generating system

A claim of conformance with this International Standard shall specify which Type(s) is (are) supported. A system generating an ODC for interchange shall be in conformance with this International Standard if it meets the mandatory requirements of this International Standard for the Type(s) supported.

2.3 Receiving system

A claim of conformance with this International Standard shall specify which Type(s) is (are) supported.

A system receiving an ODC for interchange shall be in conformance with this International Standard if it is able to process any recording made on the cartridge according to 2.1 on the Type(s) specified.

2.4 Compatibility statement

A claim of conformance with this International Standard shall include a statement listing any other Optical Disk Cartridge Standard supported by the system for which conformance is claimed. This statement shall specify the number of the Standard(s), including, where appropriate, the ODC Type(s), and whether support includes reading only or both reading and writing.

3 Normative references

The following referenced documents are indispensable for the application of this document. For dated references, only the edition cited applies. For undated references, the latest edition of the referenced document (including any amendments) applies.

ECMA-287 (2002), *Safety of electronic equipment*

4 Terms and definitions

For the purposes of this document the following terms and definitions apply.

4.1
asymmetry
deviation between the centre levels of signals generated by two distinct repeating mark and space length patterns

4.2
band
annular area on the disk having a constant clock frequency

4.3
case
housing for an optical disk that protects the disk and facilitates disk interchange

© ISO/IEC 2006 – All rights reserved
Copyright International Organization for Standardization
Provided by IHS under license with ISO
No reproduction or networking permitted without license from IHS
Not for Resale

4.4
Case Reference Plane
plane defined for each side of the case, to which the dimensions of the case are referred

4.5
channel bit
elements by which, after modulation, the binary values ZERO and ONE are represented by marks and spaces on the disk

4.6
clamping zone
annular part of the disk within which the clamping force is applied by the clamping device

4.7
cover layer
transparent layer of the disk through which the optical beam accesses the recording layer

4.8
Cyclic Redundancy Code
CRC
method for detecting errors in data

4.9
data field
subdivision of a sector intended for the recording of user data

4.10
Defect Management
method for handling the defective areas on the disk

4.11
Disk Reference Plane
plane defined by the perfectly flat annular surface of an ideal spindle onto which the clamping zone of the disk is clamped, and which is normal to the axis of rotation

4.12
entrance surface
surface of the disk onto which the optical beam first impinges

4.13
Error Correction Code
ECC
error-detecting code designed to correct certain kinds of errors in data

4.14
field
subdivision of a sector

4.15
format
arrangement or layout of information on the disk

NOTE The annular area on the disk bearing the format is the formatted zone.

4.16
hub
central feature on the disk, which interacts with the spindle of the disk drive to provide radial centring and the clamping force

© ISO/IEC 2006 – All rights reserved

Copyright International Organization for Standardization
Provided by IHS under license with ISO
No reproduction or networking permitted without license from IHS
Not for Resale

4.17
interleaving
process of allocating the physical sequence of units of data so as to render the data more immune to burst errors

4.18
land and groove
trench-like feature of the disk, applied before the recording of any information, and used to define the track location

NOTE The land is located nearer to the entrance surface than the groove with which it is paired to form a Physical Track. Recording is performed on both the land and groove.

4.19
mark
feature of the recording layer which takes the form of a pit, change in the reflectivity, or any other type or form that can be sensed by the optical system

NOTE The pattern of marks represents the data on the disk.

4.20
Mirror Area
area in which there is no embossed information, neither preformatted headers or grooves

4.21
optical disk
disk that will accept and retain information in the form of marks in a recording layer, that can be read with an optical beam

4.22
optical disk cartridge
ODC
device consisting of a case containing an optical disk

4.23
Phase Change
physical effect by which the area of a recording layer irradiated by a laser beam is heated so as to change from an amorphous state to a crystalline state and vice versa

4.24
Physical Block Address
PBA
numbering system of the data sectors defined to constitute a uniquely addressable sector location to the recording system

4.25
Physical Track
one revolution (360°) of adjacent groove-land pair

4.26
read power
optical power, incident at the entrance surface of the disk, used when reading

4.27
recording layer
layer of the disk on, or in, which data is written during manufacture and/or use

NOTE The recording layer may actually consist of a multiple layer stack of different materials or composite materials.

--`,,```,,,,````-`-`,,`,,`,`,,`---

© ISO/IEC 2006 – All rights reserved
Copyright International Organization for Standardization
Provided by IHS under license with ISO
No reproduction or networking permitted without license from IHS
Not for Resale

4.28
Recording Track
one revolution (360°) of either a land feature or groove feature of the disk (Land Recording Track or Groove Recording Track) where recording may be performed

4.29
Reed-Solomon code
error detection and/or correction code which is particularly suited to the correction of errors which occur in bursts or are strongly correlated

4.30
sector
smallest addressable part of a track in the formatted area of the disk

4.31
space
area between marks along the track

4.32
spindle
part of the disk drive which contacts the disk and/or hub

4.33
substrate
layer of the disk provided for mechanical support of the recording layer

4.34
track
path which is followed by the focus of the optical beam during exactly one revolution of the disk

4.35
track pitch
distance between Land Recording Track centrelines and adjacent Groove Recording Track centrelines, measured in the radial direction

4.36
User Area
area of the disk intended for the recording of user data

4.37
wobble
periodic radial deviation of the track (groove or land) from the average centreline that is used as a supplemental timing signal

4.38
write-inhibit hole
hole in the case which, when detected by the drive to be open, inhibits write operations

4.39
zone
annular area of the disk

© ISO/IEC 2006 – All rights reserved

Copyright International Organization for Standardization
Provided by IHS under license with ISO
No reproduction or networking permitted without license from IHS
Not for Resale

5 Conventions and notations

5.1 Representation of numbers

A measured value is rounded off to the least significant digit of the corresponding specified value. For instance, it implies that a specified value of 1,26 with a positive tolerance of + 0,01 and a negative tolerance of - 0,02 allows a range of measured values from 1,235 to 1,275.

Numbers in decimal notations are represented by the digits 0 to 9.

Numbers in hexadecimal notation are represented by the hexadecimal digits 0 to 9 and A to F in parentheses.

The setting of bits is denoted by ZERO and ONE.

Numbers in binary notations and bit patterns are represented by strings of digits 0 and 1, with the most significant bit shown to the left.

Negative values of numbers in binary notation are given as Two's complement.

In each field the data is recorded so that the most significant byte (MSB), identified as Byte 0, is recorded first and the least significant byte (LSB) last. In a field of 8*n* bits, bit $b_{(8n-1)}$ shall be the most significant bit (msb) and bit b_0 the least significant bit (lsb). Bit $b_{(8n-1)}$ is recorded first.

A binary digit which can be set indifferently to ZERO or to ONE is represented by "x".

5.2 Names

The names of entities, e.g. specific tracks, fields, areas, zones, etc. are given a capital initial.

6 Acronyms

AM	Address Mark
CRC	Cyclic Redundancy Code
DDS	Disk Definition Structure
DIR	Drive Information Record
DMA	Defect Management Area
ECC	Error Correction Code
ESISIC	Enhanced Selective Inter-Symbol Interference Cancellation
ID	Identifier
LBA	Logical Block Address
LSB	Least Significant Byte
lsb	least significant bit
MSB	Most Significant Byte
msb	most significant bit
NA	Numerical Aperture
NBSNR	Narrow-Band Signal-to-Noise Ratio
NRZ	Non Return to Zero
ODC	Optical Disk Cartridge

--`,,```,,,,````-`-`,,`,,`,`,,`---
© ISO/IEC 2006 – All rights reserved
Copyright International Organization for Standardization
Provided by IHS under license with ISO
No reproduction or networking permitted without license from IHS
Not for Resale

PA	Postamble
PBA	Physical Block Address
PDL	Primary Defect List
PLL	Phase Locked Loop
PSA	Primary Spares Area
QWM	Quadrature Wobble Marks
QWMG	Quadrature Wobble Marks on Groove
QWML	Quadrature Wobble Marks on Land
RESYNC	Re-synchronization
RFO	Read Focus Offset
RLL	Run-Length Limited (code)
RW	Rewritable
SCSI	Small Computer System Interface
SDI	Specific Disk Information
SDL	Secondary Defect List
SPS	Start Position Shift
SSA	Secondary Spares Area
STOB	Six Time Oversampled Bi-Phase
SYNC	Synchronization
TA	Transition Area
TIA	Time Interval Analyzer
UDO	Ultra Density Optical (disk)
VAP	Verify and Protect
VFO	Variable Frequency Oscillator
WORM	Write Once Read Many
ZCAV	Zoned Constant Angular Velocity

7 General description

The optical disk cartridge, which is the subject of this International Standard, consists of a case containing an optical disk.

The case is a protective enclosure for the disk. It has access windows covered by two shutters. One of the windows is automatically uncovered by the drive when the cartridge is inserted into it.

The optical disk is made from two sides that are assembled together. Each side consists of a Phase Change recording layer placed between the substrate and the cover layer. The substrates of each side are bonded together.

The optical disk is recordable on both sides. Data can be written onto the disk as marks with Phase Change characteristics variations in the recording layer, using a focused optical beam. Data can be read by the optical beam using the change in reflectivity and diffraction between mark and space in the recording layer. The beam accesses the recording layer through the transparent cover layer of the disk.

Part of the disk contains read-only data in the form of pre-embossed pits. This data can be read using the diffraction of the optical beam by the embossed pits.

© ISO/IEC 2006 – All rights reserved

Copyright International Organization for Standardization
Provided by IHS under license with ISO
No reproduction or networking permitted without license from IHS
Not for Resale

8 General requirement

8.1 Environments

8.1.1 Test environment

The test environment is the environment where the air immediately surrounding the optical disk cartridge has the following properties:

Temperature :	23 °C ± 2 °C
Relative humidity :	45 % to 55 %
Atmospheric pressure :	60 kPa to 106 kPa
Air cleanliness :	Class 100 000 (see Annex A)

No condensation on or in the optical disk cartridge shall occur. Before testing, the optical disk cartridge shall be conditioned to this environment for 48 hours minimum. It is recommended that, before testing, the entrance surface of the disk be cleaned according to the instructions of the manufacturer of the disk.

Unless otherwise stated, all tests and measurements shall be made in this test environment.

8.1.2 Operating environment

This International Standard requires that an optical disk cartridge, which meets all requirements of this International Standard in the specified test environment, provides interchange over the specified ranges of environmental parameters in the operating environment.

The operating environment is the environment where air immediately surrounding the optical disk cartridge has the following properties:

Temperature :	5 °C to 55 °C
Relative humidity :	3 % to 85 %
Absolute humidity :	1 g/m^3 to 30 g/m^3
Atmospheric pressure :	60 kPa to 106 kPa
Temperature gradient :	10 °C/h max.
Relative humidity gradient :	10 %/h max.
Air cleanliness :	Office environment (see Annex S)

No condensation on or in the optical disk cartridge shall occur. If an optical disk cartridge has been exposed to conditions outside those specified in this Clause, it shall be acclimatized in an allowed operating environment for at least 2 hours before use (see also Annex T).

8.1.3 Storage environment

The optical disk cartridge without any protective enclosure shall not be stored in an environment outside the range allowed for storage. The storage environment is defined as an environment where the air immediately surrounding the optical disk cartridge has the following properties:

Temperature :	-10 °C to 55 °C
Relative humidity :	3 % to 90 %
Absolute humidity :	1 g/m^3 to 30 g/m^3
Atmospheric pressure :	60 kPa to 106 kPa
Temperature gradient :	15 °C/h max.

© ISO/IEC 2006 – All rights reserved
Copyright International Organization for Standardization
Provided by IHS under license with ISO
No reproduction or networking permitted without license from IHS
Not for Resale

Relative humidity gradient : 10 %/h max.

Air cleanliness : Office environment (see Annex S)

No condensation on or in the optical disk cartridge shall occur.

8.1.4 Transportation

This International Standard does not specify requirements for transportation. Guidance for transportation is given in Annex U.

8.2 Temperature shock

The optical disk cartridge shall withstand a temperature shock of up to 20 °C when inserted into, or removed from, the drive.

8.3 Safety requirements

The cartridge shall satisfy the safety requirements of Standard ECMA-287, when used in the intended manner or in any foreseeable use in an information processing system.

8.4 Flammability

The cartridge and its components shall be made from materials that comply with the flammability class for HB materials, or better, as specified in Standard ECMA-287.

9 Reference Drive

The Reference Drive is a drive several critical components of which have well defined properties and which is used to test the read, write, and erase parameters of the disk for conformance to this International Standard. This section gives an outline of all components; components critical for tests in specific sections are specified in those sections.

9.1 Optical system

The basic set-up of the optical system of the Reference Drive used for measuring the write, read and erase parameters is shown in figure 1. Different components and locations of components are permitted, provided that the performance remains the same as that of the set-up in figure 1. The optical system shall be such that the detected light reflected from the entrance surface of the disk is minimized so as not to influence the accuracy of the measurements.

© ISO/IEC 2006 All rights reserved

Copyright International Organization for Standardization
Provided by IHS under license with ISO
No reproduction or networking permitted without license from IHS
Not for Resale

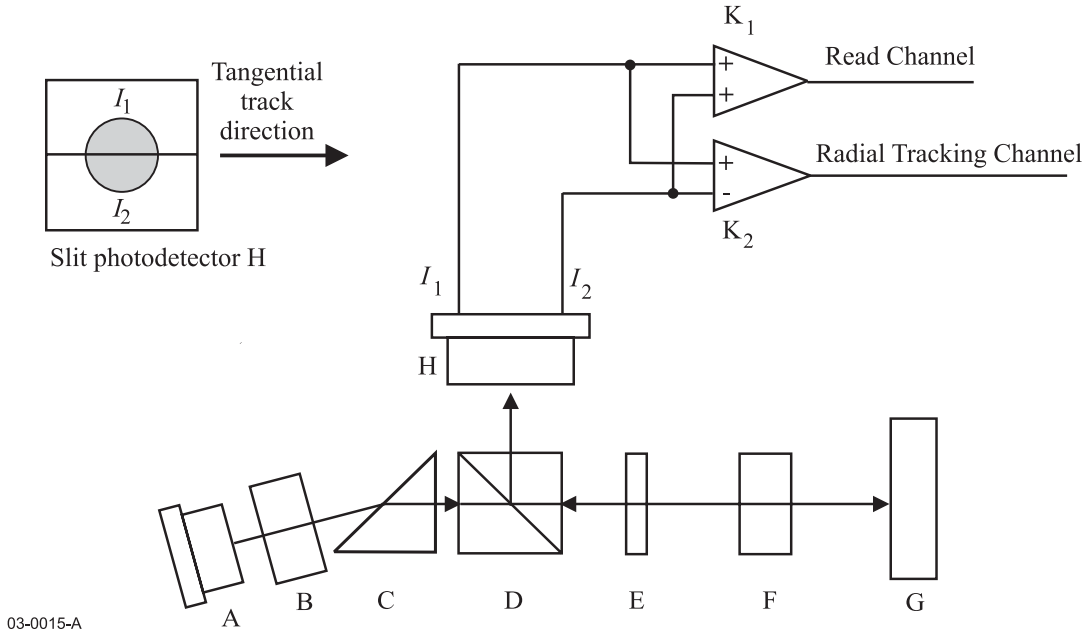

A	Laser diode	F	Objective lens
B	Collimator lens	G	Optical disk
C	Optional shaping prism	H	Split photodetector
D	Polarizing beamsplitter	I_1, I_2	Outputs currents from the split photodetector
E	Quarter-wave plate	K_1, K_2	d.c.-coupled amplifiers

Figure 1 — Optical system of the Reference Drive

The combination of the polarizing beamsplitter D and quarter-wave plate E separates the incident optical beam and the beam reflected from the optical disk G. The polarizing beamsplitter D shall have a p-s intensity reflectance ratio of at least 90.

9.2 Optical beam

The focused optical beam used for writing, reading and erasing data shall have the following properties:

Wavelength (λ)	405 nm to 410 nm
Polarization	Circular
Numerical aperture	0,70 ± 0,01
Light intensity at the rim of the pupil of the objective lens level	50 % to 60 % of the maximum intensity
Wave front aberration after passing through an ideal cover layer of the disk (Thickness: 0,1 mm and index of refraction: 1,55)	0,033 λ rms max.
Relative intensity noise (RIN) 10 log [(a.c. light power density/Hz)/d.c. light power]	- 130 dB/Hz max.

© ISO/IEC 2006 – All rights reserved
Copyright International Organization for Standardization
Provided by IHS under license with ISO
No reproduction or networking permitted without license from IHS
Not for Resale

9.3 Read Channel

The Read Channel shall be used for reading embossed and written marks, using the changes in diffraction and reflectivity produced by the marks.

The Read Channel shall detect the total amount of light in the exit pupil of the objective lens.

The amplifier K_1 after the photodetector shall be d.c-coupled and have a flat response within 1 dB from d.c. to 60 MHz.

9.4 Tracking

The method of generating the axial tracking error is not specified for the Reference Drive.

The radial tracking error is generated in the Radial Tracking Channel from the output currents of a split photodiode detector, the division of which runs parallel to the image of the tracks on the diode (see figure 1).

The radial tracking error signal relates to the difference in the amount of light in the two halves of the exit pupil of the objective lens.

The amplifier K_2 after the photodetector shall be d.c.-coupled with the bandwidth characteristics specified in clause 21.

The requirements for the accuracy with which the focus of the optical beam must follow the tracks is specified in 20.2.4.

9.5 Rotation of the disk

The spindle shall position the disk as specified in 12.4. It shall rotate the disk at 32,5 Hz $\pm$ 0,25 % for Type RW and 35,0 Hz $\pm$ 0,25 % for Type WORM. The direction of rotation of the disk side being tested shall be counter-clockwise when viewed from the objective lens.

Section 2 — Mechanical and physical characteristics

10 Dimensional and physical characteristics of the case

10.1 General description of the case

The case (see figure 2) is a rigid protective container of rectangular shape. It has windows on both side A and side B to allow the spindle of the drive to clamp the disk by its hub and to allow the head to access the disk. The A- or B-shutter uncovers the window upon insertion into the drive, and automatically covers it upon removal from the drive. The case has media identification, write-inhibit, mis-insertion features, detent for autoloading, gripper slots for an autochanger, label areas, and side identification inscriptions.

10.2 Relationship of Sides A and B

The features essential for physical interchangeability are represented in figure 2. When Side A of the cartridge faces upwards, Side A of the disk faces downwards. Sides A and B of the case are identical as far as the features given here are concerned. The description is given for one side only. References to Sides A and B can be changed to B or A respectively.

© ISO/IEC 2006 – All rights reserved

Copyright International Organization for Standardization
Provided by IHS under license with ISO
No reproduction or networking permitted without license from IHS
Not for Resale

10.3 Reference axes and case reference planes

There is a Case Reference Plane P for each side of the case. Each Case Reference Plane P contains two orthogonal axes X and Y to which the dimensions of the case are referred. The intersection of the X and Y axes defines the centre of the location hole. The X axis extends through the centre of the alignment hole.

10.4 Case drawings

The case is represented schematically by the following drawings.

Figure 2 shows a composite drawing of Side A of the case in isometric form, with the major features identified from Side A.

Figure 3 shows the envelope of the case with respect to a location hole at the intersection of the X and Y axes of Case Reference Plane P.

Figure 4 shows the surfaces S1, S2, S3 and S4 which establish the Case Reference Plane P.

Figure 4a shows the details of surface S3.

Figure 5 shows the details of the insertion slot and detent.

Figure 6 shows the gripper slots, used for automatic handling.

Figure 7 shows the write-inhibit holes.

Figure 8 shows the media identification sensor holes.

Figure 9 shows the head and motor window.

Figure 10 shows the shutter opening features.

Figures 11a and 11b show the user label areas.

10.5 Dimensions of the case

10.5.1 Overall dimensions

The total length of the case (see figure 3) shall be

L_1 = 153,0 mm ± 0,4 mm

The distance from the top of the case to the reference axis X shall be

L_2 = 127,0 mm ± 0,3 mm

The distance from the bottom of the case to the reference axis X shall be

L_3 = 26,0 mm ± 0,3 mm

The total width of the case shall be

$$L_4 = 135{,}0 \text{ mm} \begin{matrix} +\ 0{,}0 \text{ mm} \\ -\ 0{,}6 \text{ mm} \end{matrix}$$

The distance from the left-hand side of the cartridge to the reference axis Y shall be

© ISO/IEC 2006 – All rights reserved
Copyright International Organization for Standardization
Provided by IHS under license with ISO
No reproduction or networking permitted without license from IHS
Not for Resale

$$L_5 = 128{,}5\ \text{mm}\ {}^{+\ 0{,}0\ \text{mm}}_{-\ 0{,}5\ \text{mm}}$$

The distance from the right-hand side of the cartridge to the reference axis Y shall be

L_6 = 6,5 mm ± 0,2 mm

The width shall be reduced on the top by the radius

$R_1 = L_4$

originating from a point defined by L_5 and

L_7 = 101,0 mm ± 0,3 mm

The two corners of the top shall be rounded with a radius

R_2 = 1,5 mm ± 0,5 mm

and the two corners at the bottom with a radius

R_3 = 3,0 mm ± 1,0 mm

The thickness of the case shall be

L_8 = 11,00 mm ± 0,30 mm

The eight long edges of the case shall be rounded with a radius

R_4 = 1,0 mm max.

10.5.2 Location hole

The centre of the location hole (see figure 3) shall coincide with the intersection of the reference axes X and Y. It shall have a square form with a side length of

$$L_9 = 4{,}10\ \text{mm}\ {}^{+\ 0{,}00\ \text{mm}}_{-\ 0{,}06\ \text{mm}}$$

held to a depth of

L_{10} = 2,35 mm (i.e. typical wall thickness)

after which a cavity extends through to the alignment hole on the opposite side of the case.

The lead-in edges shall be rounded with a radius

R_5 = 0,5 mm max.

10.5.3 Alignment hole

The centre of the alignment hole (see figure 3) shall lie on reference axis X at a distance of

L_{11} = 122,0 mm ± 0,2 mm

© ISO/IEC 2006 – All rights reserved

Copyright International Organization for Standardization
Provided by IHS under license with ISO
No reproduction or networking permitted without license from IHS
Not for Resale

from the reference axis Y.

The dimensions of the hole shall be

$$L_{12} = 4{,}10 \text{ mm} \begin{matrix} +\ 0{,}00 \text{ mm} \\ -\ 0{,}06 \text{ mm} \end{matrix}$$

and

$$L_{13} = 5{,}0 \text{ mm} \begin{matrix} +\ 0{,}2 \text{ mm} \\ -\ 0{,}0 \text{ mm} \end{matrix}$$

held to a depth of L_{10}, after which a cavity extends through to the location hole on the opposite side of the case.

The lead-in edges shall be rounded with radius R_5.

10.5.4 Surfaces on Case Reference Planes P

The Case Reference Plane P (see figures 4 and 4a) for a side of the case shall contain four surfaces (S1, S2, S3 and S4) on that side of the case, specified as follows:

Two circular surfaces S1 and S2.

Surface S1 shall be a circular area centred around the square location hole and have a diameter of

D_1 = 9,0 mm min.

Surface S2 shall be a circular area centred around the rectangular alignment hole and have a diameter of

D_2 = 9,0 mm min.

Two elongated surfaces S3 and S4, that follow the contour of the cartridge and shutter edges.

Surfaces S3 and S4 are shaped symmetrically.

Surface S3 shall be defined by two circular sections with radii

R_6 = 1,5 mm ± 0,1 mm

with an origin given by

L_{14} = 4,0 mm ± 0,1 mm

L_{15} = 86,0 mm ± 0,3 mm

and

R_7 = 1,5 mm ± 0,1 mm

with an origin given by

L_{16} = 1,9 mm ± 0,1 mm

L_{17} = 124,5 mm ± 0,3 mm

© ISO/IEC 2006 – All rights reserved
Copyright International Organization for Standardization
Provided by IHS under license with ISO
No reproduction or networking permitted without license from IHS
Not for Resale

The arc with radius R_7 shall continue on the right hand side with radius

$$R_8 = 134{,}0\ \text{mm}\ {}^{+\ 0{,}2\ \text{mm}}_{-\ 0{,}7\ \text{mm}}$$

which is a dimension resulting from $L_5 + L_{14} + R_6$ with an origin given by L_5 and L_7. A straight, vertical line shall smoothly join the arc of R_6 to the arc of R_8.

The left-hand side of S3 shall be bounded by radius

$R_9 = 4{,}5\ \text{mm} \pm 0{,}3\ \text{mm}$

which is a dimension resulting from $L_{18} + L_{14} - R_6$ with an origin given by

$L_{18} = 2{,}0\ \text{mm} \pm 0{,}1\ \text{mm}$

$L_{19} = 115{,}5\ \text{mm} \pm 0{,}3\ \text{mm}$

The left-hand side of the boundary shall be closed by two straight lines. The first one shall smoothly join the arc of R_6 to the arc of R_9. The second one shall run from the left-hand tangent of R_7 to its intersection with R_9.

10.5.5 Insertion slots and detent features

The case shall have two symmetrical insertion slots with embedded detent features (see figure 5). The slots shall have a length of

$L_{20} = 35{,}0\ \text{mm} \pm 0{,}3\ \text{mm}$

a width of

$$L_{21} = 6{,}0\ \text{mm}\ {}^{+\ 0{,}3\ \text{mm}}_{-\ 0{,}0\ \text{mm}}$$

and a depth of

$L_{22} = 3{,}0\ \text{mm} \pm 0{,}1\ \text{mm}$

located

$L_{23} = 2{,}5\ \text{mm} \pm 0{,}2\ \text{mm}$

from Case Reference Plane P.

The slots shall have a lead-in chamfer given by

$L_{24} = 0{,}5\ \text{mm max.}$

$L_{25} = 5{,}0\ \text{mm max.}$

The detent notch shall be a semi-circle of radius

$R_{10} = 3{,}0\ \text{mm} \pm 0{,}2\ \text{mm}$

with the origin given by

© ISO/IEC 2006 – All rights reserved

Copyright International Organization for Standardization
Provided by IHS under license with ISO
No reproduction or networking permitted without license from IHS
Not for Resale

L_{26} = 13,0 mm ± 0,3 mm

L_{27} = 2,0 mm ± 0,1 mm

L_{28} = 114,0 mm ± 0,3 mm

The dimensions L_2, L_{26}, and L_{28} are interrelated, their values shall be such so that they are all three within specification.

10.5.6 Gripper slots

The case shall have two symmetrical gripper slots (see figure 6) with a depth of

L_{29} = 5,0 mm ± 0,3 mm

from the edge of the case and a width of

L_{30} = 6,0 mm ± 0,3 mm

The upper edge of a slot shall be

L_{31} = 12,0 mm ± 0,3 mm

above the bottom of the case.

10.5.7 Write-inhibit holes

Sides A and B shall each have a write-inhibit hole (see figure 7). The case shall include a device for opening and closing each hole. The hole at the left-hand side of Side A of the case, is the write-inhibit hole for Side A of the disk. The protected side of the disk shall be made clear by inscriptions on the case or by the fact that the device for Side A of the disk can only be operated from Side A of the case.

When writing and erasing on Side A of the disk is not allowed, the write-inhibit hole shall be open all through the case. It shall have a diameter

D_3 = 4,0 mm min.

Its centre shall be specified by

L_{32} = 8,0 mm ± 0,2 mm

L_{33} = 111,0 mm ± 0,3 mm

on Side A of the case.

When writing is allowed on Side A of the disk, the write-inhibit hole shall be closed on Side A of the case, at a depth of typically L_{10}, i.e. the wall thickness of the case. In this state, the opposite side of the same hole, at Side B of the case, shall be closed and not recessed from the Case Reference Plane P of Side B of the case by more than

L_{34} = 0,3 mm max.

The opposite side of the write-inhibit hole for protecting Side B of the disk shall have a diameter D_3. Its centre shall be specified by L_{32} and

L_{35} = 11,0 mm ± 0,2 mm

on Side A of the case.

© ISO/IEC 2006 – All rights reserved
Copyright International Organization for Standardization
Provided by IHS under license with ISO
No reproduction or networking permitted without license from IHS
Not for Resale

10.5.8 Media identification sensor holes

There shall be two sets of two media sensor holes (see figure 8). The holes shall extend through the case, and have a diameter of

$$D_4 = 4{,}0\ \text{mm}\ {}^{+\,0{,}3\ \text{mm}}_{-\,0{,}0\ \text{mm}}$$

the positions of their centres shall be specified by L_{33}, L_{35} and

L_{36} = 19,5 mm ± 0,2 mm

L_{37} = 17,0 mm ± 0,2 mm

L_{38} = 105,0 mm ± 0,3 mm

A hole is deemed to be open when there is no obstruction in this hole over a diameter D_4 all through the case.

A hole is deemed to be closed, when the hole is closed on both Side A and Side B of the case. The closure shall be recessed from Case Reference plane P by

L_{39} = 0,3 mm max.

The holes closest to the long edges of the case are numbered 1. The other holes are numbered 2. The meaning of the status (closed, open) of each hole shall be as in table 1.

Table 1 — Media identification sensor holes

Sensor Hole No.	Indication	Closed	Open
1	Media Type	WORM	RW
2	Future use*	Yes	No

* This hole shall be closed in cartridges conforming to this International Standard.

10.5.9 Head and motor window

The case shall have a window on each side to enable the optical head and the motor spindle to access the disk (see figure 9). The dimensions are referenced to a centreline, located at a distance of

L_{40} = 61,0 mm ± 0,2 mm

to the left of reference axis Y.

The width of the head access shall be defined by

L_{41} = 17,50 mm min.

L_{42} = 17,50 mm min.

and its height shall extend to

L_{43} = 118,2 mm min.

The two inside corners shall be rounded with a radius of

© ISO/IEC 2006 All rights reserved

Copyright International Organization for Standardization
Provided by IHS under license with ISO
No reproduction or networking permitted without license from IHS
Not for Resale

R_{11} = 3,0 mm max.

The motor spindle access shall have a diameter of

D_5 = 35,0 mm min.

and its centre shall be defined by L_{40} and

L_{44} = 43,0 mm ± 0,2 mm

10.5.10 Shutters

The case shall have two spring-loaded, unidirectional shutters (see figure 10), designed to completely cover the head and motor windows when closed. A shutter movement of 36,5 mm shall be sufficient to ensure that the head and motor window is opened to the minimum size specified in 10.5.9. The shutter shall be free to slide in a recessed area of the case in such a way as to ensure that the overall thickness of the case and shutter shall not exceed L_8.

The top surface of the shutters shall be at

L_{45} = 126,7 mm ± 0,3 mm

10.5.11 Slots for shutter opener

Both Side A and Side B shutter shall have only one slot (see figure 10) in which the shutter opener of the drive can engage to open the shutter. The slot shall be dimensioned as follows:

When the shutter is closed, the centre of the slot used to push the shutter open shall be located at a distance of

L_{46} = 55,0 mm ± 0,5 mm

from reference axis Y on either side the case.

The length of the slot shall be

L_{47} = 7,0 mm ± 0,1 mm

The depth of the slot shall be

L_{48} = 3,5 mm ± 0,5 mm

The width of each slot from the Case Reference Plane P of Side A and B of the case shall be

$L_{49} = 4{,}5\ ^{+\ 0{,}5\ \text{mm}}_{-\ 0{,}0\ \text{mm}}$

10.5.12 Slots to prevent insertion into a MO-drive

The case shall have two non-moveable slots (see Figure 10) designed to prevent from insertion into MO-drives using cartridges conforming to ISO/IEC 22092 (or into drives using similar cartridge designs as specified in ISO/IEC 18093, ISO/IEC 15486, ISO/IEC 13842, ISO/IEC 13549, ISO/IEC 13481, and ISO/IEC 11560). These two non-moveable slots have no function when the case is inserted into a drive designed to receive cartridges conforming to this International Standard.

© ISO/IEC 2006 – All rights reserved
Copyright International Organization for Standardization
Provided by IHS under license with ISO
No reproduction or networking permitted without license from IHS
Not for Resale

The edge designed to engage with the shutter opening arm of such MO-drives and so prevent further insertion, shall be located at a distance of

L_{50} = 36,5 mm ± 0,2 mm

from reference axis Y on either side the case.

The length of the slot shall be

L_{51} = 4,5 mm ± 0,5 mm

and the angle of the lead-out ramp shall be

A_1 = 60,0° ± 1,0°

The depth of the slot shall be

L_{52} = 4,0 mm ± 0,5 mm

With both side A and side B shutter closed the width of each slot shall be the full width of the case L_8.

10.5.13 User label areas

The case shall have the following minimum areas for user labels (see figure 11a):

on Side A and Side B: 33,5 mm x 70,5 mm

on the bottom side: 7,0 mm x 115,0 mm

These areas shall be recessed by 0,2 mm min. Their positions are specified by the following dimensions and relations between dimensions.

L_{53} = 29,0 mm min.

$L_{54} - L_{53}$ = 70,5 mm min.

$L_{56} - L_{55}$ = 33,5 mm min.

$L_8 - L_{59} - L_{60}$ = 7,0 mm min.

$L_4 - L_{57} - L_{58}$ = 115,0 mm min.

10.6 Mechanical characteristics

All requirements of this clause shall be met in the operating environment.

10.6.1 Materials

The case shall be constructed from any suitable materials such that it meets the requirements of this International Standard.

10.6.2 Mass

The mass of the case without the optical disk shall not exceed 150 g.

© ISO/IEC 2006 – All rights reserved

Copyright International Organization for Standardization
Provided by IHS under license with ISO
No reproduction or networking permitted without license from IHS
Not for Resale

10.6.3 Edge distortion

The cartridge shall meet the requirement of the edge distortion test defined in Annex B.

10.6.4 Compliance

The cartridge shall meet the requirement of the compliance (flexibility) test defined in Annex C. The requirement guarantees that a cartridge can be constrained in the proper plane of operation within the drive.

10.6.5 Shutter opening force

The spring force on the shutter shall be such that the force required to open the shutter does not exceed 2 N. It shall be sufficiently strong to close a free-sliding shutter, irrespective of the orientation of the case.

10.7 Drop test

The optical disk cartridge shall withstand dropping on each surface and on each corner from a height of 1,2 m onto a concrete floor covered with a vinyl layer 2 mm thick. The cartridge shall withstand all such impacts without any functional failure.

The write-inhibit switches shall not move to change the state (open or closed) of the write-inhibit holes during the drop test.

10.8 Electro-static discharge test

The optical disk cartridge shall meet the electro-static discharge requirements specified in Annex D.

© ISO/IEC 2006 – All rights reserved
Copyright International Organization for Standardization
Provided by IHS under license with ISO
No reproduction or networking permitted without license from IHS
Not for Resale

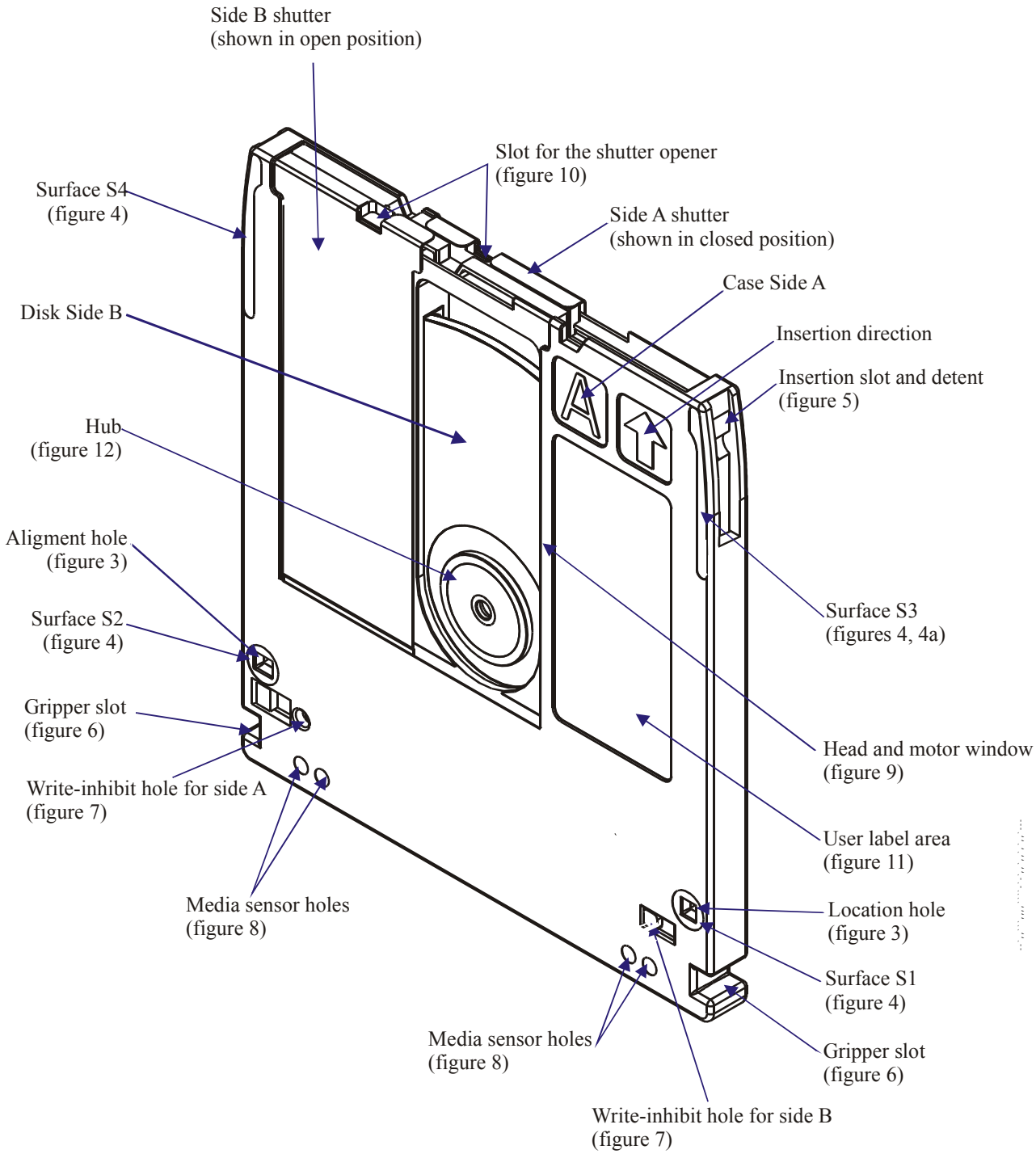

Figure 2 — Case

© ISO/IEC 2006 All rights reserved
Copyright International Organization for Standardization
Provided by IHS under license with ISO
No reproduction or networking permitted without license from IHS
Not for Resale

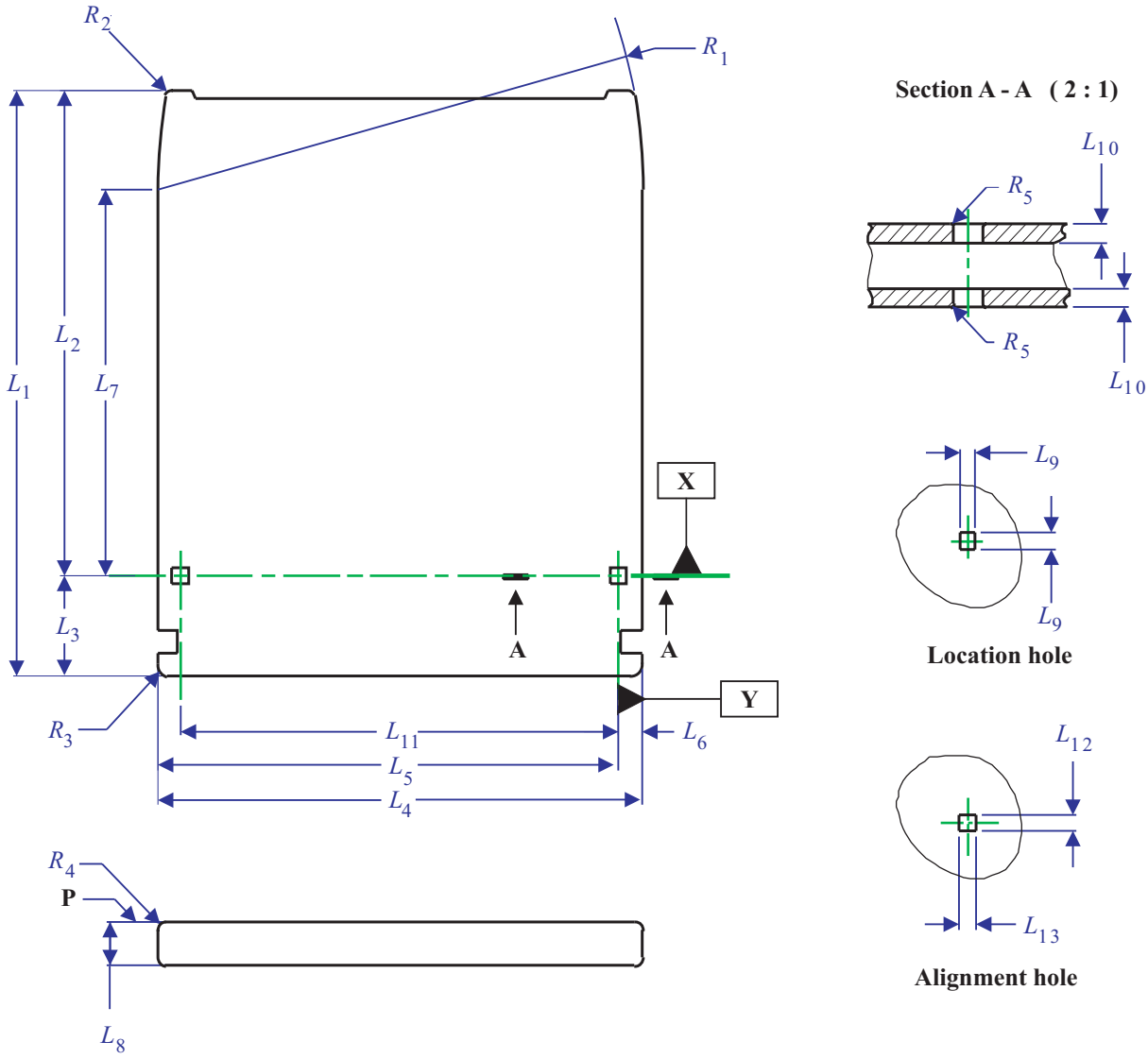

Figure 3 — Overall dimensions and reference axes

© ISO/IEC 2006 – All rights reserved
Copyright International Organization for Standardization
Provided by IHS under license with ISO
No reproduction or networking permitted without license from IHS
Not for Resale

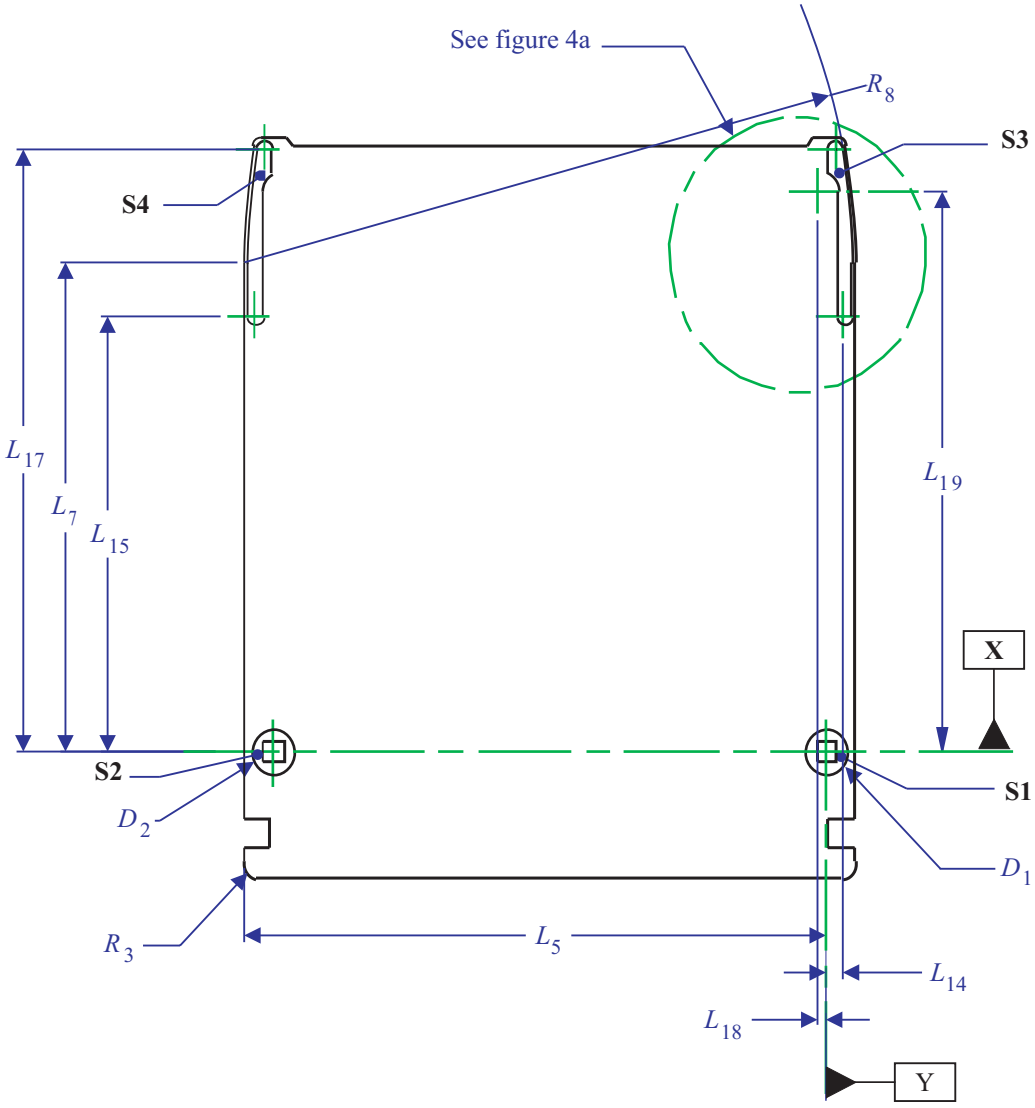

Figure 4 — Surfaces S1, S2, S3 and S4 of the Case Reference Plane P

© ISO/IEC 2006 – All rights reserved
Copyright International Organization for Standardization
Provided by IHS under license with ISO
No reproduction or networking permitted without license from IHS
Not for Resale

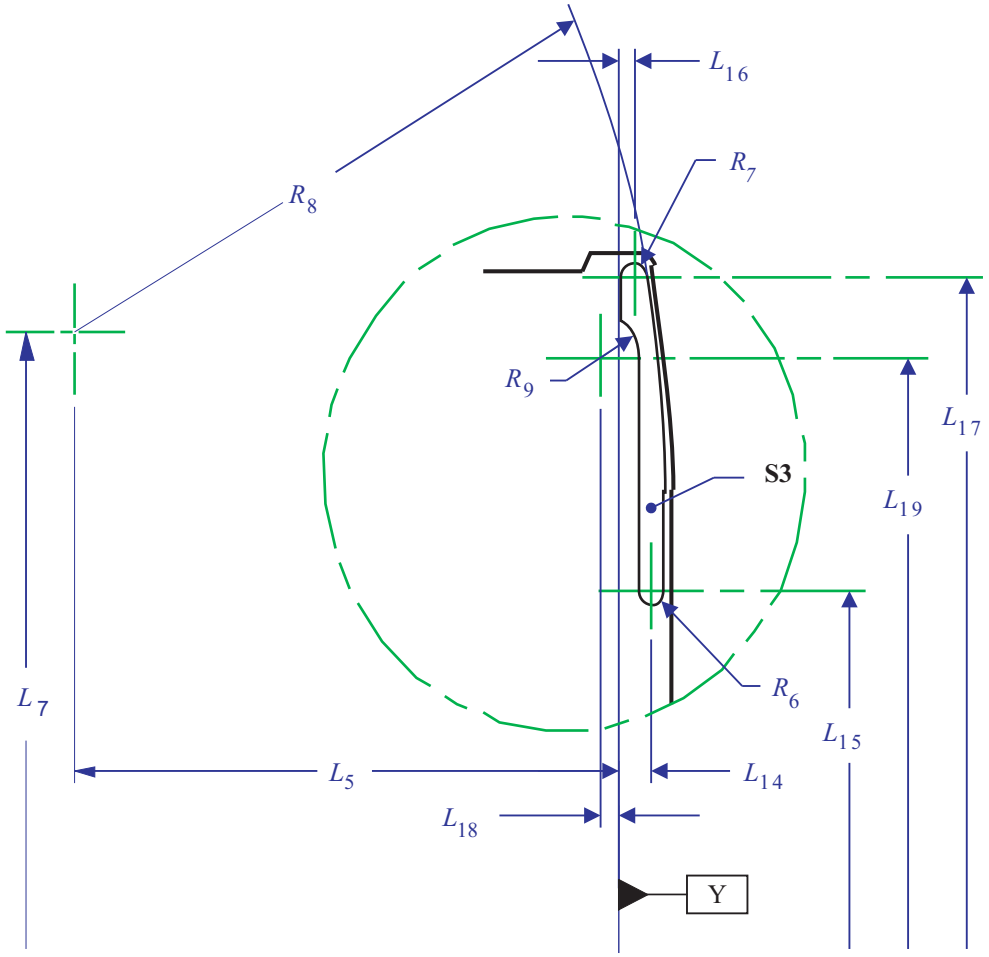

Figure 4a — Details of surface S3

Copyright International Organization for Standardization
Provided by IHS under license with ISO
No reproduction or networking permitted without license from IHS
Not for Resale
© ISO/IEC 2006 – All rights reserved

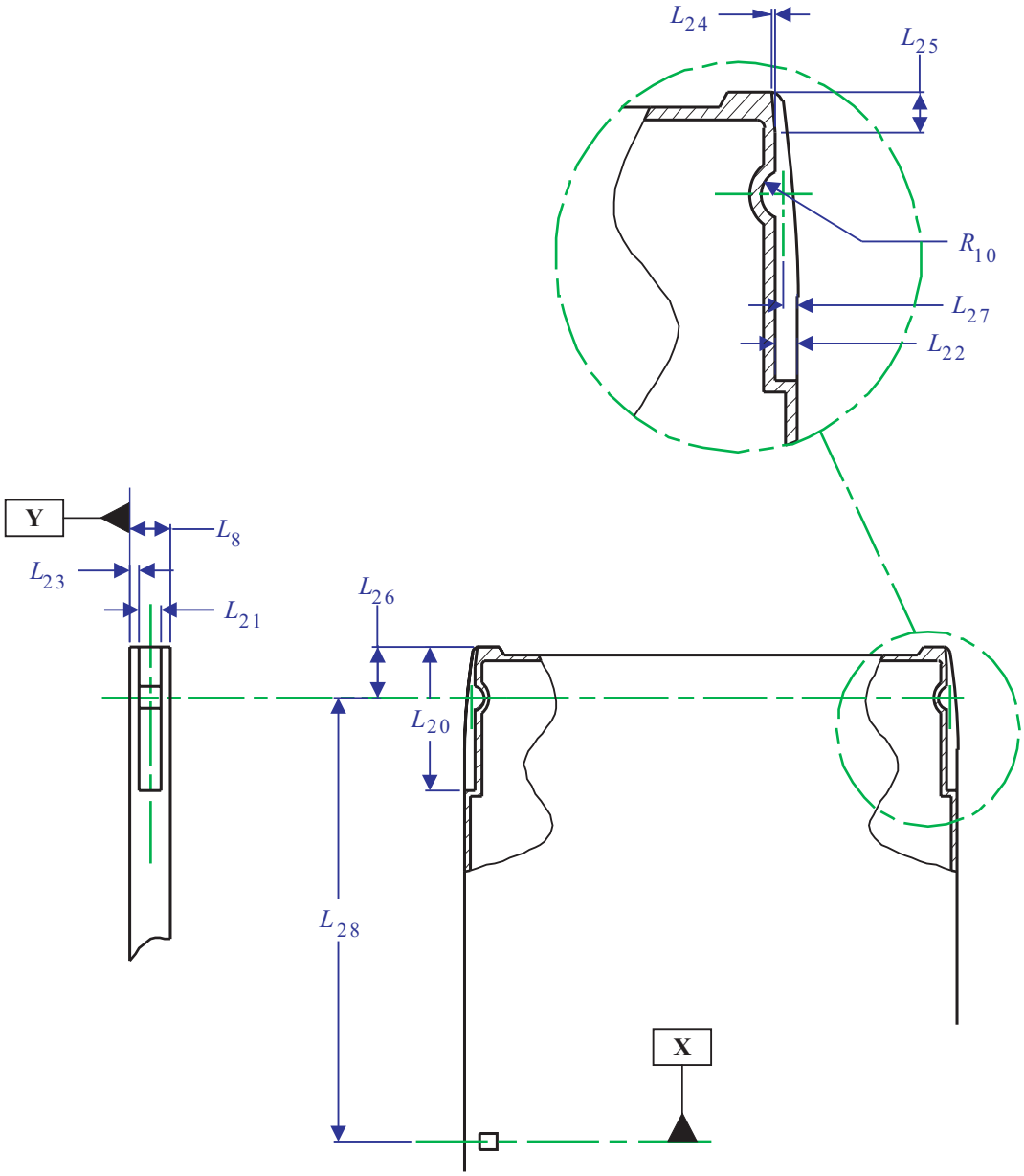

Figure 5 — Insertion slots and detents

© ISO/IEC 2006 – All rights reserved
Copyright International Organization for Standardization
Provided by IHS under license with ISO
No reproduction or networking permitted without license from IHS
Not for Resale

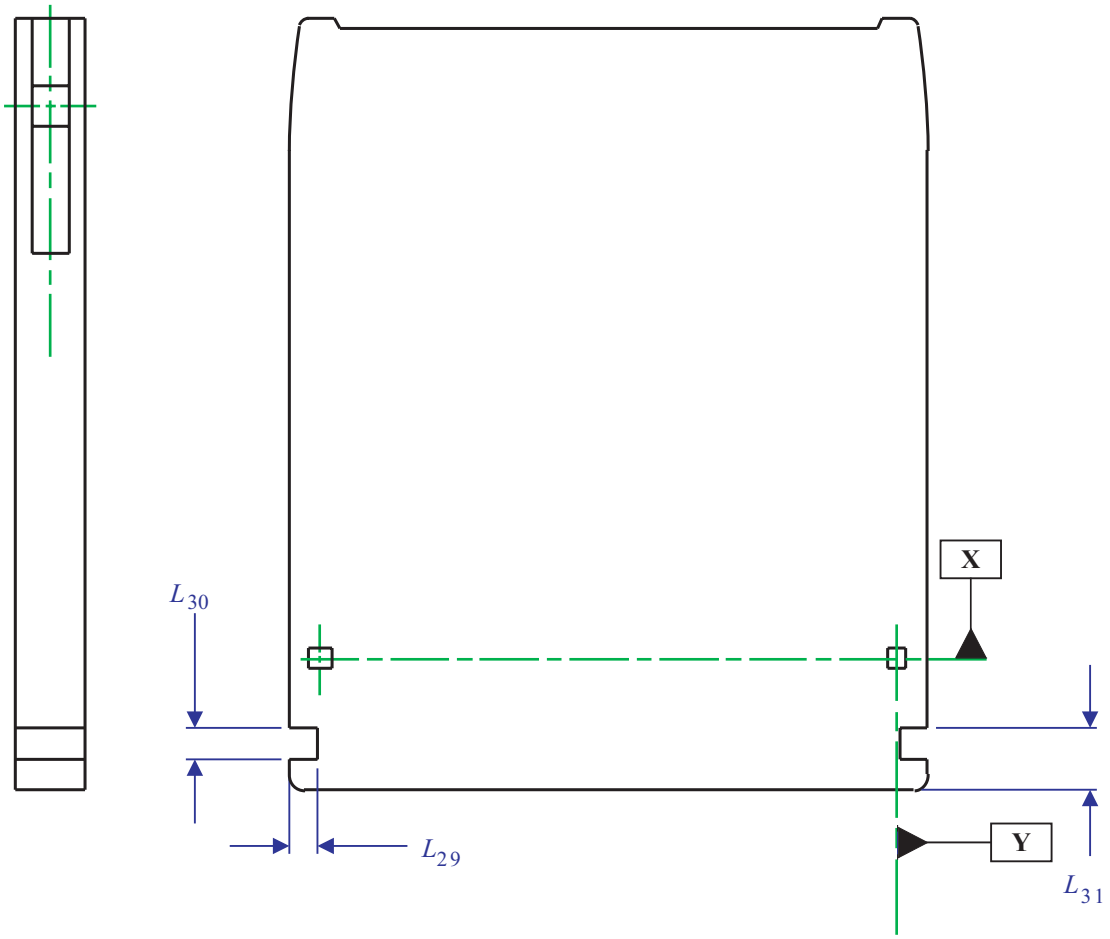

Figure 6 — Gripper slots

© ISO/IEC 2006 – All rights reserved
Copyright International Organization for Standardization
Provided by IHS under license with ISO
No reproduction or networking permitted without license from IHS
Not for Resale

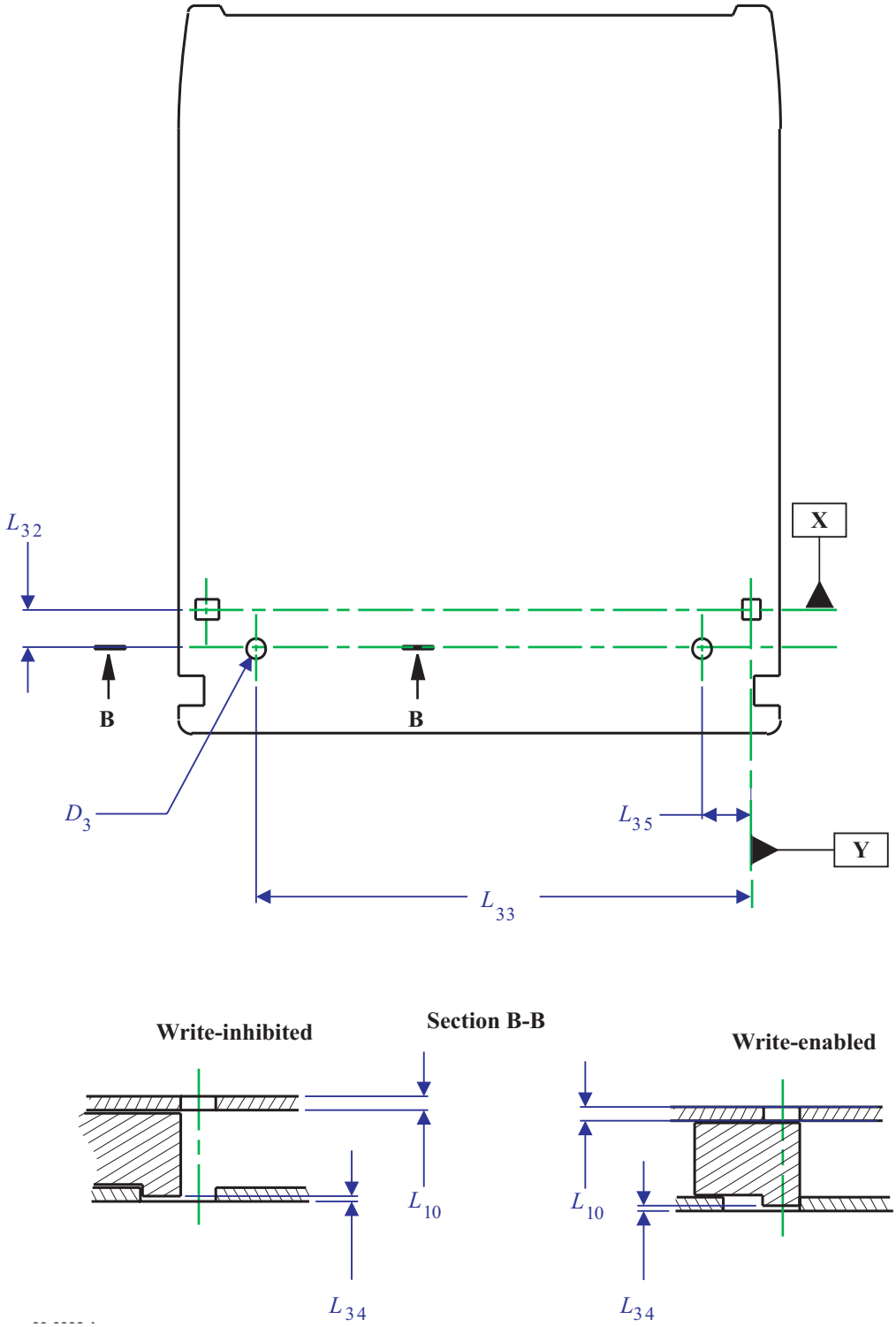

Figure 7 — Write-inhibit holes

© ISO/IEC 2006 – All rights reserved
Copyright International Organization for Standardization
Provided by IHS under license with ISO
No reproduction or networking permitted without license from IHS
Not for Resale

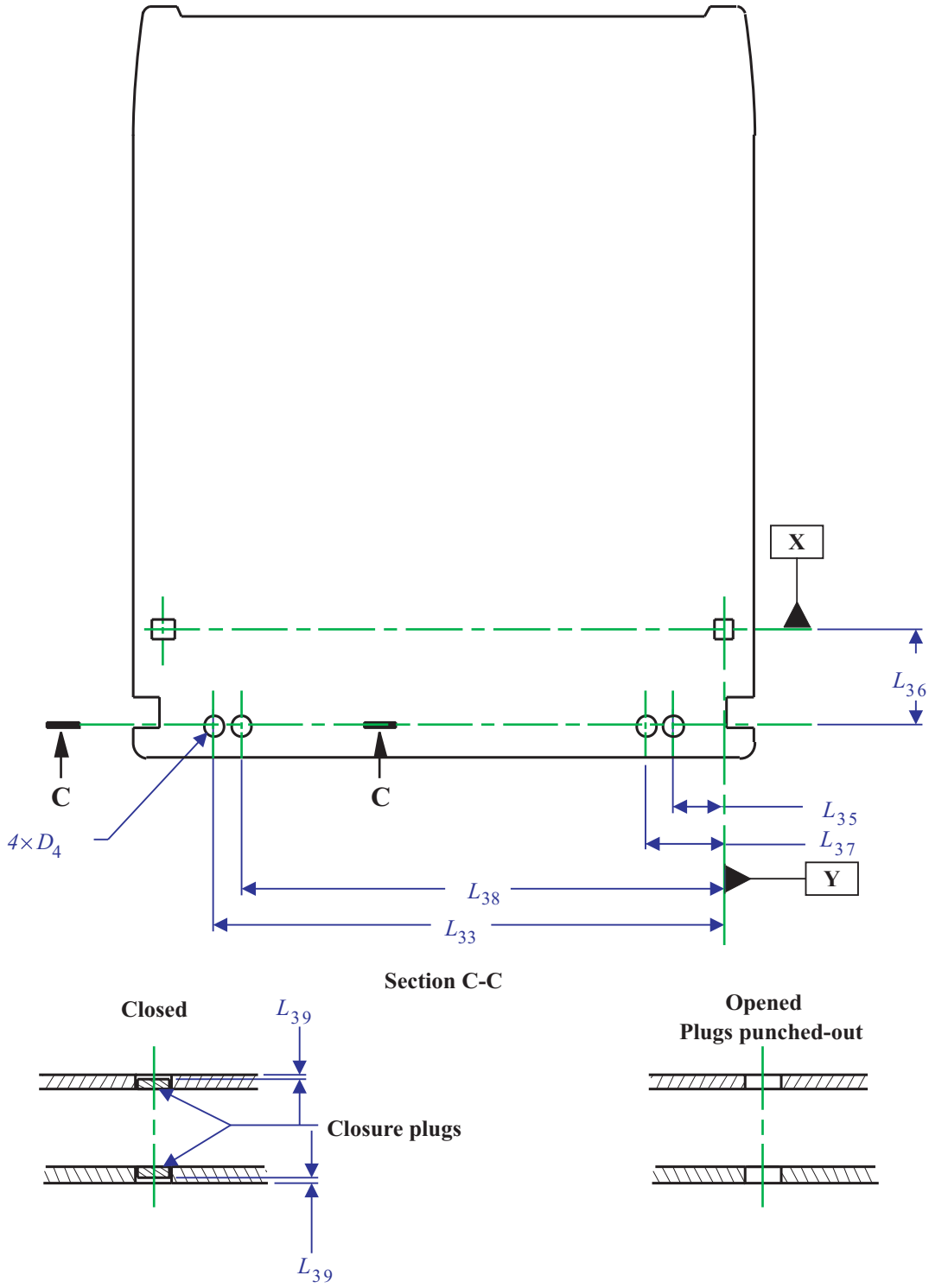

Figure 8 — Media identification sensor holes

--`,,```,,,,````-`-`,,`,,`,`,,`---
Copyright International Organization for Standardization
Provided by IHS under license with ISO
No reproduction or networking permitted without license from IHS
Not for Resale
© ISO/IEC 2006 – All rights reserved

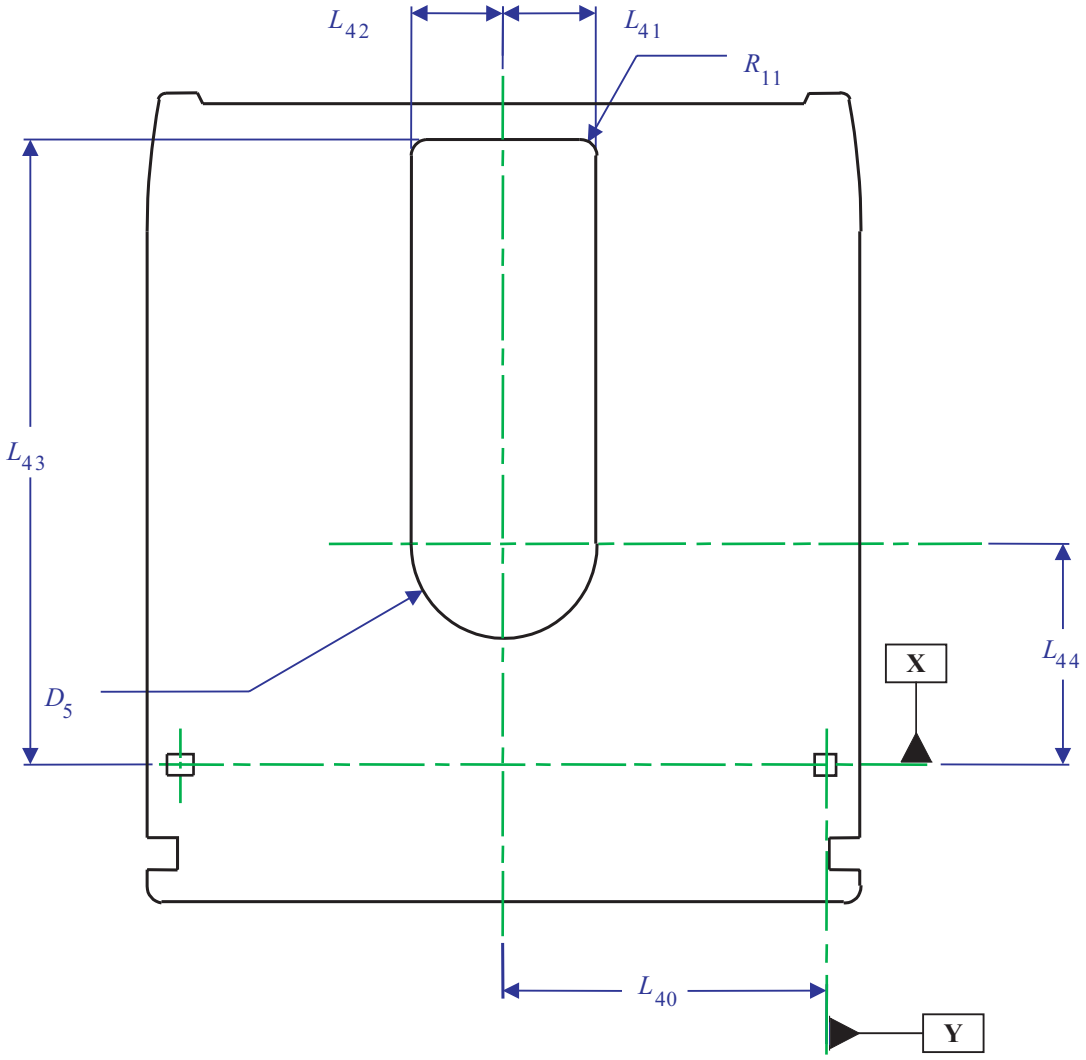

Figure 9 — Head and motor window

© ISO/IEC 2006 – All rights reserved
Copyright International Organization for Standardization
Provided by IHS under license with ISO
No reproduction or networking permitted without license from IHS
Not for Resale

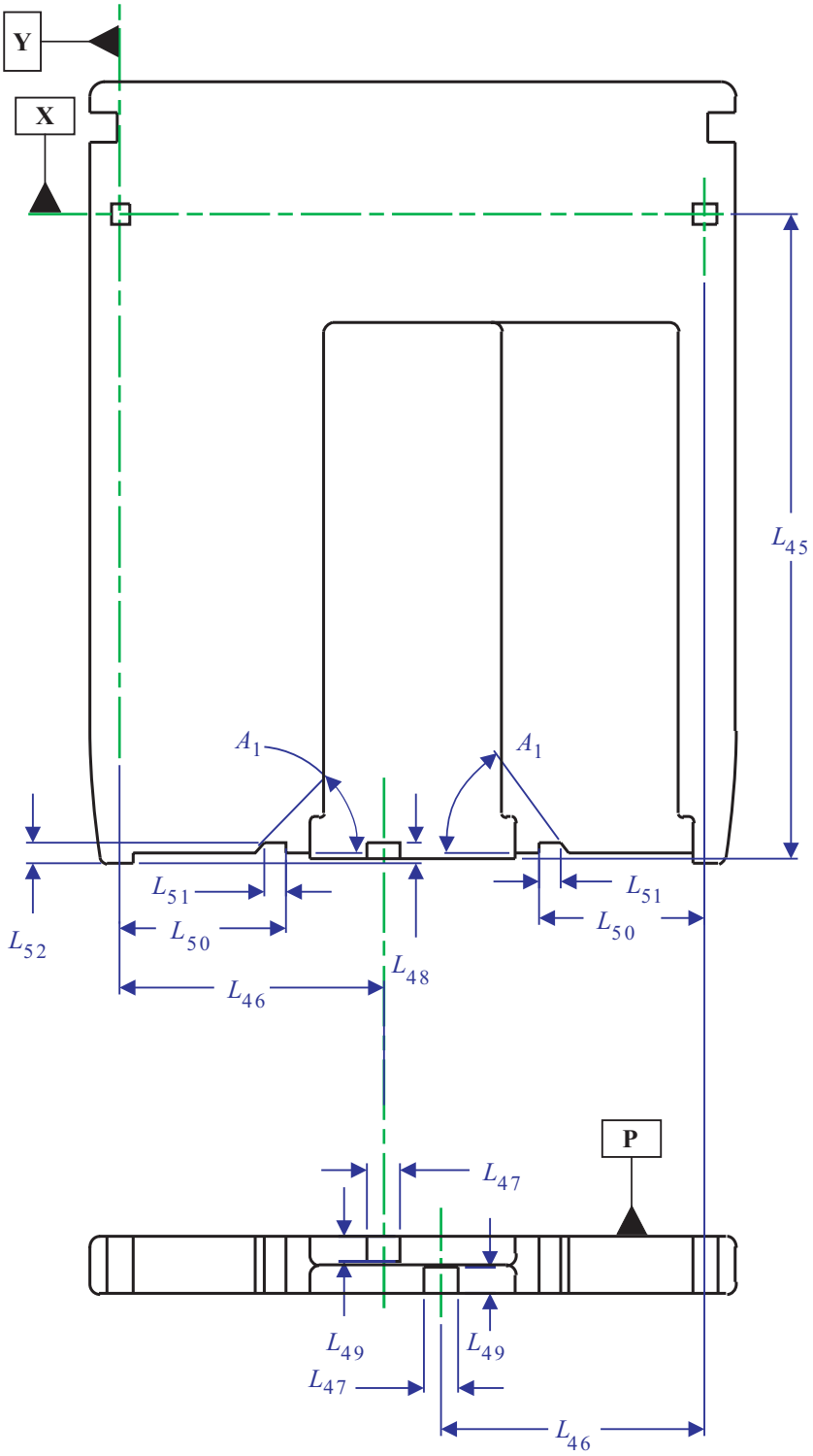

Figure 10 — Shutter opening features

Copyright International Organization for Standardization
Provided by IHS under license with ISO
No reproduction or networking permitted without license from IHS
Not for Resale
© ISO/IEC 2006 – All rights reserved

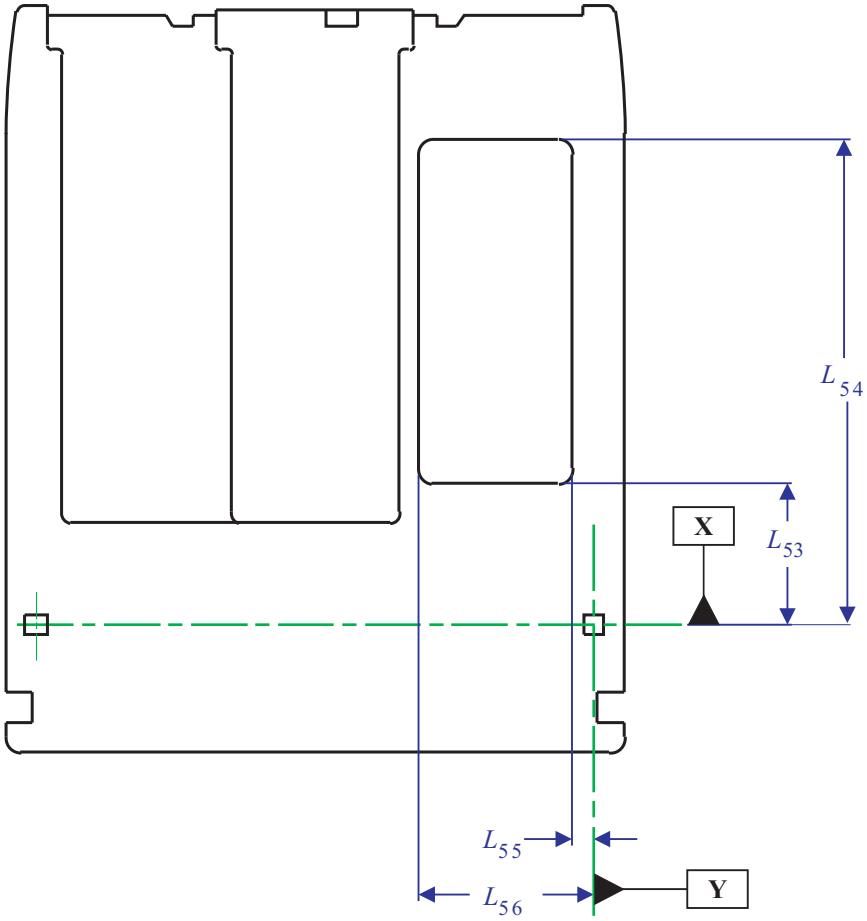

Figure 11a — User label area (Identical on Side A and Side B)

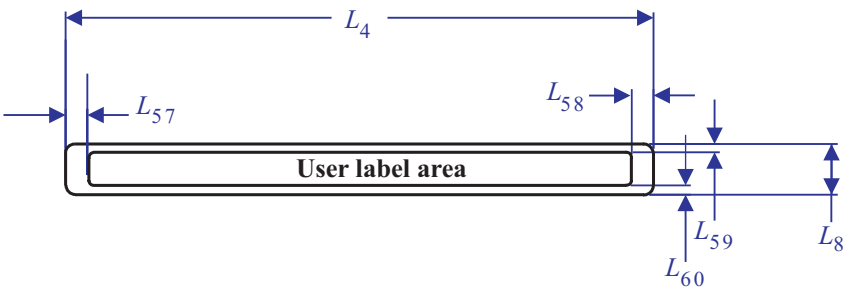

Figure 11b — User label area on bottom surface

11 Dimensional, mechanical, and physical characteristics of the disk

11.1 General description of the disk

The disk shall consist of two sides.

© ISO/IEC 2006 – All rights reserved
Copyright International Organization for Standardization
Provided by IHS under license with ISO
No reproduction or networking permitted without license from IHS
Not for Resale

Each disk side shall consist of a circular substrate with a hub on one face. The substrate is coated with a recording layer on the same disk face as the hub. The recording layer is protected from environmental influences by a protective 100 µm thick cover layer. The cover layer shall be transparent to allow an optical beam to focus on the recording layer (see 11.5).

The two disk sides shall be assembled with the cover layer facing outwards.

The circular hubs are in the centre of the disk. They interact with the spindle of the drive, and provide the radial centring and the clamping force.

11.2 Reference axis and plane of the disk

Some dimensions of the hub are referred to a Disk Reference Plane D (see figure 12). The Disk Reference Plane D is different from Case Reference Plane P that is described in 10.3. Plane D is defined by the perfectly flat annular surface of an ideal spindle onto which the Clamping Zone of the disk is clamped, and which is normal to the axis of rotation of this spindle. The reference axis A of the disk passes through the centre of the centre hole of the hub, and is normal to Disk Reference Plane D.

The recording layer is nominally located on Disk Reference Plane D.

11.3 Dimensions of the disk

The dimensions of the disk shall be measured in the test environment. The dimensions of the disk in an operating environment can be estimated from the dimensions specified in this clause.

The outer diameter of the disk shall be 130,0 mm nominal. The tolerance is determined by the movement of the disk inside the case allowed by 12.3 and 12.4.

The total thickness of the disk outside the hub area shall be 2,40 mm min. and 2,80 mm max.

The Clamping Zone is the area on the disk where the clamping mechanism of the optical drive grips the disk and is defined by D_6 and D_7.

The clearance zone extending from the outer diameter of the Clamping Zone (D_6) to the inner diameter of the reflective zone (see clause 17) shall be excluded from the total thickness requirement; however there shall be no projection from the Disk Reference Plane D in the direction of the optical system of more than 0,2 mm in this zone.

11.3.1 Hub dimensions

The outer diameter of the hub (see figure 12) shall be

$$D_8 = 25{,}0 \text{ mm} \begin{matrix} +\,0{,}0 \text{ mm} \\ -\,0{,}2 \text{ mm} \end{matrix}$$

The height of the hub shall be

$$h_1 = 2{,}2 \text{ mm} \begin{matrix} +\,0{,}0 \text{ mm} \\ -\,0{,}2 \text{ mm} \end{matrix}$$

The diameter of the centre hole of the hub shall be

$$D_9 = 4{,}004 \text{ mm} \begin{matrix} +\,0{,}012 \text{ mm} \\ -\,0{,}000 \text{ mm} \end{matrix}$$

© ISO/IEC 2006 – All rights reserved
Copyright International Organization for Standardization
Provided by IHS under license with ISO
No reproduction or networking permitted without license from IHS
Not for Resale

The height of the top of the centring hole at diameter D_9, measured above the Disk Reference Plane D, shall be

h_2 = 1,9 mm min.

The centring length at diameter D_9 shall be

h_3 = 0,5 mm min.

The hole shall have a diameter larger than, or equal to, D_9 between the centring length and the Disk Reference Plane D.

There shall be a radius at the rim of the hub at diameter D_9 with height

h_4 = 0,2 mm ± 0,1 mm

At the two surfaces which it intersects, the radius shall be blended to prevent offsets or sharp ridges.

The height of the chamfer at the rim of the hub at diameter D_8 shall be

$$h_5 = 0{,}4 \text{ mm} \begin{matrix} + 0{,}2 \text{ mm} \\ - 0{,}2 \text{ mm} \end{matrix}$$

The angle of the chamfer shall be 45°, or a corresponding full radius shall be used.

The outer diameter of the magnetizable ring shall be

D_{10} = 19,0 mm min.

The inner diameter of the magnetizable ring shall be

D_{11} = 8,0 mm max.

The thickness of the magnetizable material shall be

h_6 = 0,5 mm min.

The position of the top of the magnetizable ring relative to the Disk Reference Plane D shall be

$$h_7 = 2{,}2 \text{ mm} \begin{matrix} + 0{,}0 \text{ mm} \\ - 0{,}1 \text{ mm} \end{matrix}$$

The outer diameter of the Clamping Zone shall be

D_6 = 35,0 mm min.

The inner diameter of the zone shall be

D_7 = 27,0 mm max.

11.3.2 Cover layer dimensions

The inner diameter of the cover layer (see figure 12) shall be

D_{12} = 36,0 ± 1,0 mm

--`,,```,,,,````-`-`,,`,,`,`,,`---

© ISO/IEC 2006 – All rights reserved
Copyright International Organization for Standardization
Provided by IHS under license with ISO
No reproduction or networking permitted without license from IHS
Not for Resale

The outer diameter of the cover layer shall extend beyond the start of the Formatted Zone as described in clause 17.

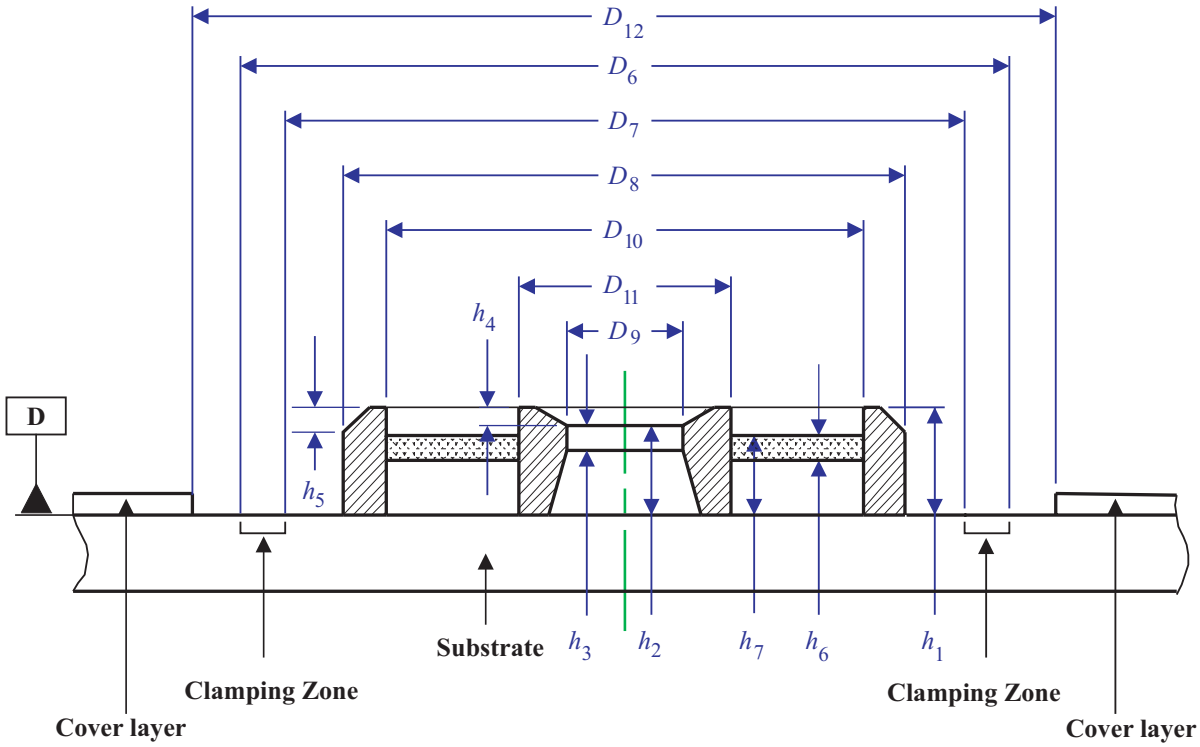

Figure 12 — Hub Dimensions

11.4 Mechanical characteristics

All requirements in this clause must be met in the operating environment.

11.4.1 Material

The disk shall be made from any suitable materials such that it meets the requirements of this International Standard. The only material properties specified by this International Standard are the magnetic properties of the magnetizable ring in the hub (see 11.3.1) and the optical properties of the cover layer in the Formatted Zone (see 11.5).

11.4.2 Mass

The mass of the disk shall not exceed 60 g.

11.4.3 Moment of inertia

The moment of inertia of the disk relative to axis A shall not exceed 0,13 g·m^2.

11.4.4 Imbalance

The imbalance of the disk relative to axis A shall not exceed 0,01g·m.

© ISO/IEC 2006 – All rights reserved
Copyright International Organization for Standardization
Provided by IHS under license with ISO
No reproduction or networking permitted without license from IHS
Not for Resale

11.4.5 Axial deflection

The axial deflection of the disk is measured as the axial deviation of the recording layer. Thus it comprises the tolerances on the thickness of the cover layer, on its index of refraction, and the deviation of the entrance surface from the Disk Reference Plane D.

The deviation of any point of the recording layer from its nominal position, in a direction normal to the Disk Reference Plane D, shall not exceed 0,13 mm in the Formatted Zone for rotational frequencies of the disk as specified in 9.5. The deviation shall be measured by the optical system defined in 9.1.

11.4.6 Axial acceleration

The maximum allowed axial error e_{max} (see Annex V) shall not exceed 0,3 µm, measured using the Reference Servo for axial tracking of the recording layer. The rotational frequency of the disk shall be as specified in 9.5. The stationary part of the motor is assumed to be motionless (no external disturbances). The measurement shall be made using a servo with the transfer function

$$H_s(i\omega) = \frac{1}{3} \times \left(\frac{\omega_0}{i\omega} \right)^2 \times \frac{1 + \frac{3i\omega}{\omega_0}}{1 + \frac{i\omega}{3\omega_0}}$$

where $\omega = 2\pi f$, $\omega_0/2\pi$ = 1 700 Hz, $i = \sqrt{-1}$

or any other servo with $|1 + H|$ within the 20 % of $|1 + Hs|$ in the bandwidth of 20 Hz to 150 kHz. Thus, the disk shall not require an acceleration of more than 11,4 m/s^2 at low frequencies from the servo motor of the Reference Servo.

11.4.7 Radial runout

The radial runout of the tracks in the recording layer in the Formatted Zone is measured as seen by the optical head of the Reference Drive. Thus it includes the distance between the axis of rotation of the spindle and reference axis A, the tolerances on the dimensions between axis A and the location of the track, and effects of non-uniformities in the index of refraction of the cover layer.

The radial runout is the difference between the maximum and the minimum distance of any track from the axis of rotation, measured along a fixed radial line over one physical track of the disk. The radial runout shall not exceed 50 µm as measured by the optical system under conditions of a hub mounted on a perfect sized test fixture shaft, for rotational frequencies of the disk as specified in 9.5.

11.4.8 Radial acceleration

The maximum allowed radial error e_{max} (see Annex V) shall not exceed 0,04 µm, measured using the Reference Servo for radial tracking of the tracks. The rotational frequency of the disk shall be as specified in 9.5. The stationary part of the motor is assumed to be motionless (no external disturbances).

The measurement shall be made using a servo with the transfer function

$$H_s(i\omega) = \frac{1}{3} \times \left(\frac{\omega_0}{i\omega} \right)^2 \times \frac{1 + \frac{3i\omega}{\omega_0}}{1 + \frac{i\omega}{3\omega_0}}$$

where $\omega = 2\pi f$, $\omega_0/2\pi$ = 2 540 Hz, $i = \sqrt{-1}$

© ISO/IEC 2006 – All rights reserved

Copyright International Organization for Standardization
Provided by IHS under license with ISO
No reproduction or networking permitted without license from IHS
Not for Resale

or any other servo with $|1 + H|$ within the 20 % of $|1 + Hs|$ in the bandwidth of 20 Hz to 150 kHz. Thus, the disk shall not require an acceleration of more than 3,4 m/s^2 at low frequencies from the servo motor of the Reference Servo.

11.4.9 Tilt

The tilt angle, defined as the angle which the normal to the entrance surface, averaged over a circular area of 1 mm diameter, makes with the normal to the Disk Reference Plane D, shall not exceed 2,8 mrad in the Formatted Zone.

11.4.10 Axial damping

The vibration of the disk clamped to a spindle with a clamping force of 8 N ± 1 N shall have a first rotationally symmetric resonance frequency mode (umbrella mode) between 200 Hz and 250 Hz with a resonance peaking, measured at disk radius 61 mm ± 1 mm, smaller than 21 dB.

11.5 Optical characteristics

11.5.1 Index of refraction

The index of refraction of the cover layer within the Formatted Zone shall be 1,55 ± 0,10.

11.5.2 Thickness

The thickness of the cover layer shall be determined by its index of refraction as specified in figure 13.

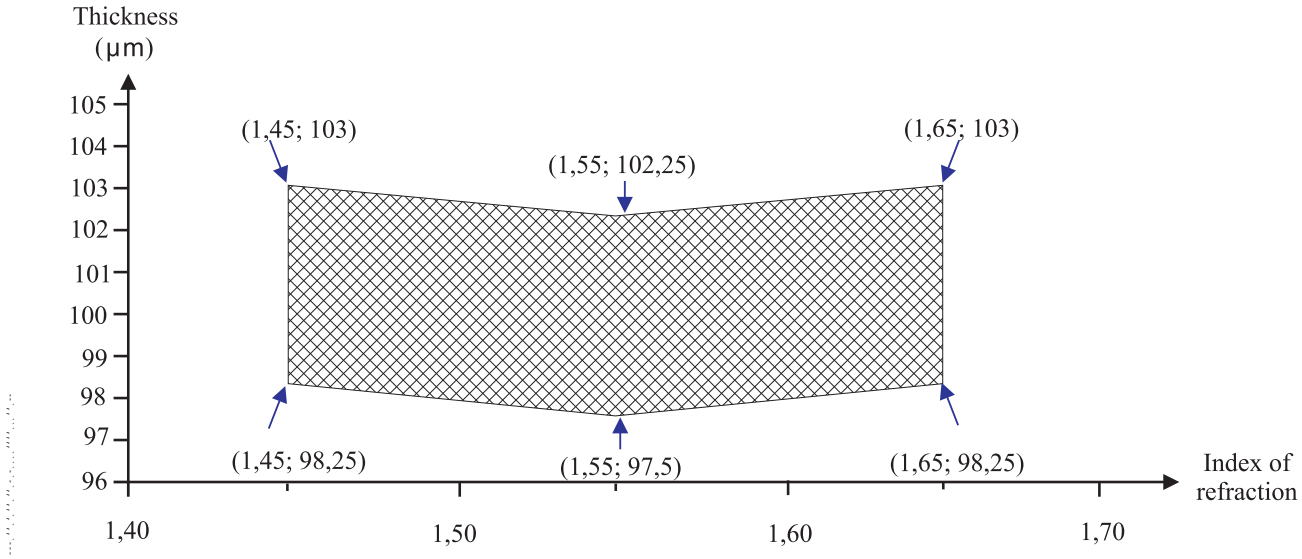

Figure 13 — Cover layer thickness as a function of the index of refraction

11.5.3 Birefringence

The birefringence value of the cover layer shall be contained as follows:

$$N_p - N_z \leq |500 \times 10^{-6}|$$

where N_p is the index of refraction along any direction in the plane of the disk and N_z is the index of refraction normal to the plane of the disk (see Annex W).

© ISO/IEC 2006 – All rights reserved
Copyright International Organization for Standardization
Provided by IHS under license with ISO
No reproduction or networking permitted without license from IHS
Not for Resale

11.5.4 Reflectance

11.5.4.1 General

The reflectance R is the value of the reflectance in a Recording Track of the User Zone, measured through the cover layer and does not include the reflectance of the entrance surface.

The nominal value R, of the reflectance, shall be specified by the manufacturer in byte 39 of the SDI sectors (see 17.4.4).

11.5.4.2 Measured value

The measured value R_m of the reflectance shall be measured under the conditions of 9.2.

Measurements shall be made in the User Zone in any Recording Track.

11.5.4.3 Requirement

The value of reflectance prior to writing at the standard wavelength specified in 9.2 shall lie within the range 16,5% to 25,0 % for Type RW disks and within the range 15,5% to 20,5% for Type WORM disks.

The value of reflectance following writing at the standard wavelength specified in 9.2 shall lie within the range 11,5 % to 19,5% for Type RW disks and within the range 7,5 % to 13,0 % for Type WORM disks.

At any point in the User Zone, prior to writing or following writing on Type RW or Type WORM disks, the measured reflectance R_m shall meet the following requirement:

$$R\,(1 - 0{,}22) \leq (R_{m\,max} + R_{m\,min}) / 2 \leq R\,(1 + 0{,}22)$$

where $R_{m\,max}$ and $R_{m\,min}$ are the maximum and minimum values of the measured reflectance in the User Zone.

This requirement specifies the acceptable range for R_m, for all disks within the same value R. Additionally, the variation of R_m within one revolution shall meet the requirement:

$$(R_{m\,max} - R_{m\,min}) / (R_{m\,max} + R_{m\,min}) \leq 0{,}10$$

12 Interface between cartridge and drive

12.1 Clamping method

When the cartridge is inserted into the drive, the shutter of the case is opened and the drive spindle engages the disk. The disk is held against the spindle by an axial clamping force, provided by the magnetizable material in the hub and the magnets in the spindle. The radial positioning of the disk is provided by the centring of the axis of the spindle in the centre hole of the hub. A turntable of the spindle shall support the disk in its Clamping Zone, determining the axial position of the disk in the case.

12.2 Clamping force

The clamping force exerted by the spindle shall be less than 14 N.

The adsorbent force measured by the test device specified in Annex E shall be in the range of 8,0 N to 12,0 N.

--`,,```,,,,````-`-`,,`,,`,`,,`---
© ISO/IEC 2006 – All rights reserved
Copyright International Organization for Standardization
Provided by IHS under license with ISO
No reproduction or networking permitted without license from IHS
Not for Resale

12.3 Capture cylinder

The capture cylinder (see figure 14) is defined as the volume in which the spindle can expect the centre of the hole of the hub to be at the maximum height of the hub, just prior to capture. The size of the cylinder limits the allowable play of the disk inside its cavity in the case. This cylinder is referred to perfectly located and perfectly sized alignment and location pins in the drive, and includes tolerances of dimensions of the case and the disk between the pins mentioned and the centre of the hub. The bottom of the cylinder is parallel to the Case Reference Plane P, and shall be located at a distance of

L_{61} = 0,5 mm min.

above the Case Reference Plane P of Side B of the case when Side A of the disk is to be used. The top of the cylinder shall be located at a distance of

L_{62} = 4,3 mm max.

above the same Case Reference Plane P, i.e. that of Side B. The diameter of the cylinder shall be

D_{13} = 3,0 mm max.

Its centre shall be defined by the nominal values of L_{40} and L_{44} (see 10.5.9).

12.4 Disk position in operating condition

When the disk is in the operating condition (see figure 14) within the drive, the position of the active recording layer shall be

L_{63} = 4,15 mm ± 0,15 mm

above the Case Reference Plane P of that side of the case that faces the optical system.

Moreover, the torque to be exerted on the disk in order to maintain a rotational frequency of 35 Hz shall not exceed 0,01 N·m, when the axis of rotation is within a circle of diameter

D_{14} = 0,2 mm max.

and a centre given by the nominal values of L_{40} and L_{44} (see 10.5.9).

© ISO/IEC 2006 – All rights reserved
Copyright International Organization for Standardization
Provided by IHS under license with ISO
No reproduction or networking permitted without license from IHS
Not for Resale

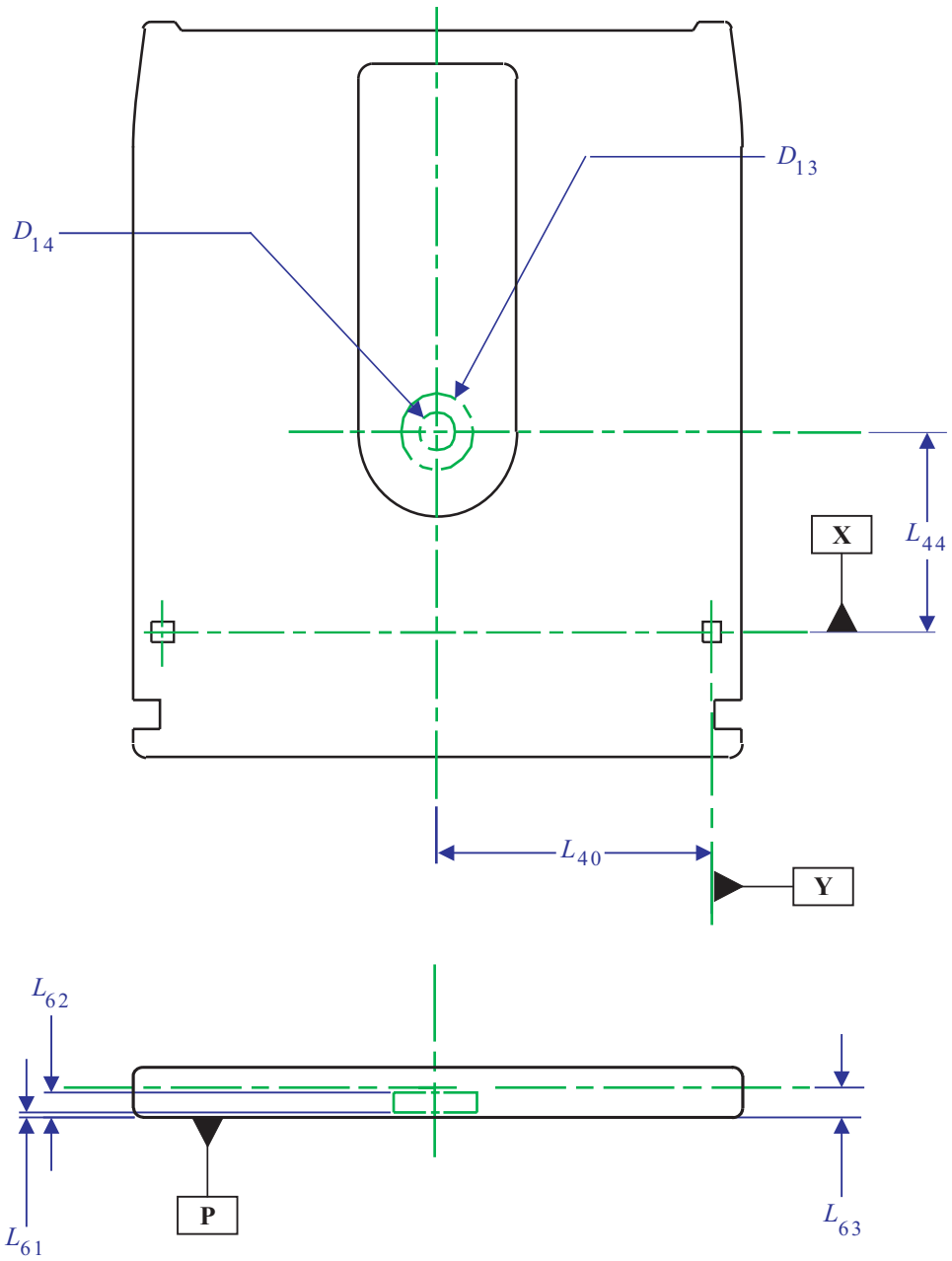

Figure 14 — Capture cylinder

© ISO/IEC 2006 – All rights reserved

Copyright International Organization for Standardization
Provided by IHS under license with ISO
No reproduction or networking permitted without license from IHS
Not for Resale

Section 3 — Format of information

13 Track and Header geometry

13.1 Track and Header shape

The Formatted Zone shall contain tracks consisting of grooves or land, intended for the continuous servo method (see figure 15).

Both grooves and lands form continuous spirals except for Preformatted Header areas, where embossed marks are formed in non-grooved areas. A groove is a trench-like feature, the bottom of which is located farther from the entrance surface than the land. Within each 360° adjacent groove-land pair defined as a Physical Track, there are two Recording Tracks, one is located on the centreline of the groove (Groove Recording Track), and the other is located on the centreline of the land (Land Recording Track).

The Headers IDL0, IDL1, and IDL2 are aligned with the centreline of the Land Recording Track, and Headers IDG0, IDG1, and IDG2 are aligned with the centreline of the Groove Recording Track.

The QWM fields, QWML, QWMG, follow IDL0, aligned to the centreline of the Land Recording Track, and IDG0, aligned to the centreline of the Groove Recording Track.

The shape of the groove and land shall be determined by the requirements in clause 21.

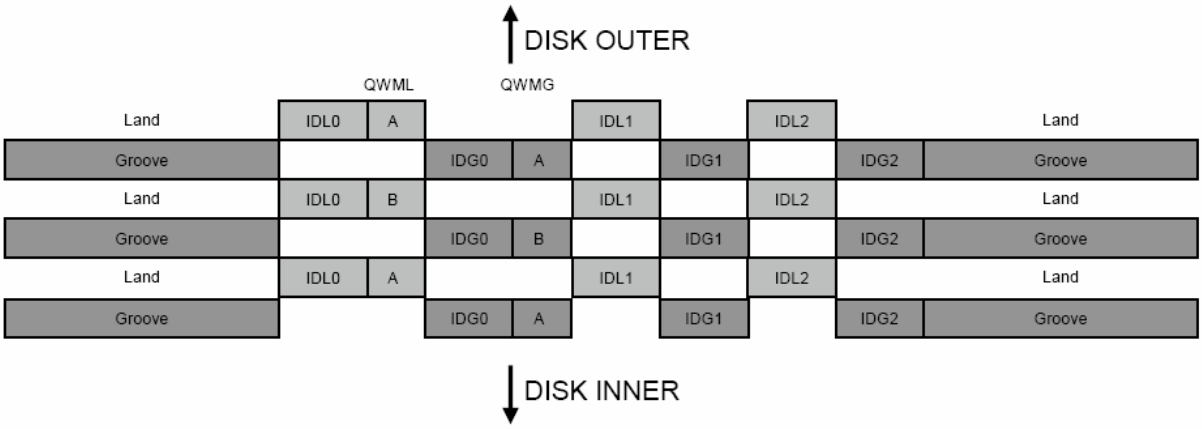

Figure 15a - Track and Header geometry

© ISO/IEC 2006 – All rights reserved
Copyright International Organization for Standardization
Provided by IHS under license with ISO
No reproduction or networking permitted without license from IHS
Not for Resale

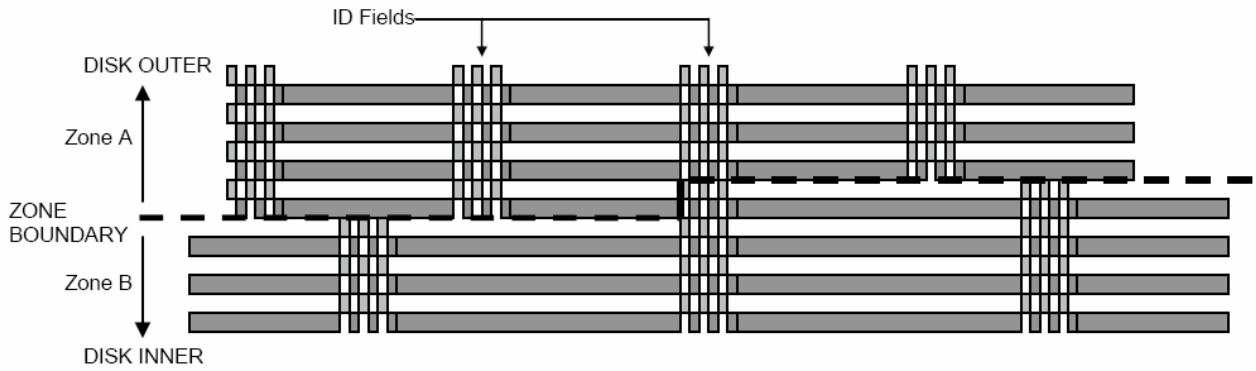

Figure 15b - Track details at zone boundary

Figure 15 - Groove and Land Recording Track geometry

13.2 Wobble groove

The groove shall be continuous between Preformatted Header regions, except for the Mirror Area defined in 13.3. The groove shall have a square wave shaped wobble with a period of 240 Channel bits. The frequency of the wobble shall be constant in each band.

The wobble shall complete 502,117 cycles between Preformatted Headers for Type RW media.

The wobble shall complete 499,117 cycles between Preformatted Headers for Type WORM media.

The wobble groove square wave shall begin immediately following the end of the IDG2 field and shall repeat until the start of the next IDL0 field. The displacement of the first half period of the square wave (first 120 Channel bits after IDG2, see figure 16) shall be in the direction of the disc outer.

The wobble characteristics shall comply with the specifications of 21.5. This will correspond to a peak-to-peak displacement of approximately 24 nm.

The Groove Recording Track centreline shall be defined as the point in the radial direction at which the displacement of the wobble toward the inner diameter and outer diameter of the disk are equal.

The Land Recording Track centreline shall be defined as the midpoint in the radial direction between the two adjacent Groove Recording Track centrelines.

The relative radial position of grooves, lands and Preformatted Header elements is illustrated on figure 16.

13.3 Mirror Area

The Mirror Area, included for media reflectivity test measurements, shall exist only in specific locations of the disk (see 14.3). The Mirror Area shall be an interruption in the groove immediately following the IDG2 field (see figure 17). The length of the Mirror Area shall be 240 Channel bits.

13.4 Direction of spiral

The track shall spiral inward from the outer diameter to the inner diameter, clockwise as viewed from the entrance surface.

13.5 Track pitch

The track pitch is the distance between adjacent Land Recording Track centrelines and Groove Recording Track centrelines, measured in a radial direction.

© ISO/IEC 2006 All rights reserved

Copyright International Organization for Standardization
Provided by IHS under license with ISO
No reproduction or networking permitted without license from IHS
Not for Resale

The track pitch for Type RW media shall be 0,400 µm ± 0,02 µm. The width of a group of bands corresponding to 44 375 Physical Tracks (88 750 Recording Tracks) shall be 35,50 mm ± 0,10 mm.

The track pitch for Type WORM media shall be 0,370 µm ± 0,02 µm. The width of a group of bands corresponding to 47 972 Physical Tracks (95 944 Recording Tracks) shall be 35,50 mm ± 0,10 mm.

13.6 Physical Track number

Track numbers used in this International Standard refer to Physical Tracks, i.e. to land and groove track recording pairs.

Physical Track 0 shall begin on the land of the first Physical Track containing Preformatted Headers at the outer diameter of the disk. The track numbers of Physical Tracks located at radii smaller than Physical Track 0 shall be increased by 1 for each Physical Track.

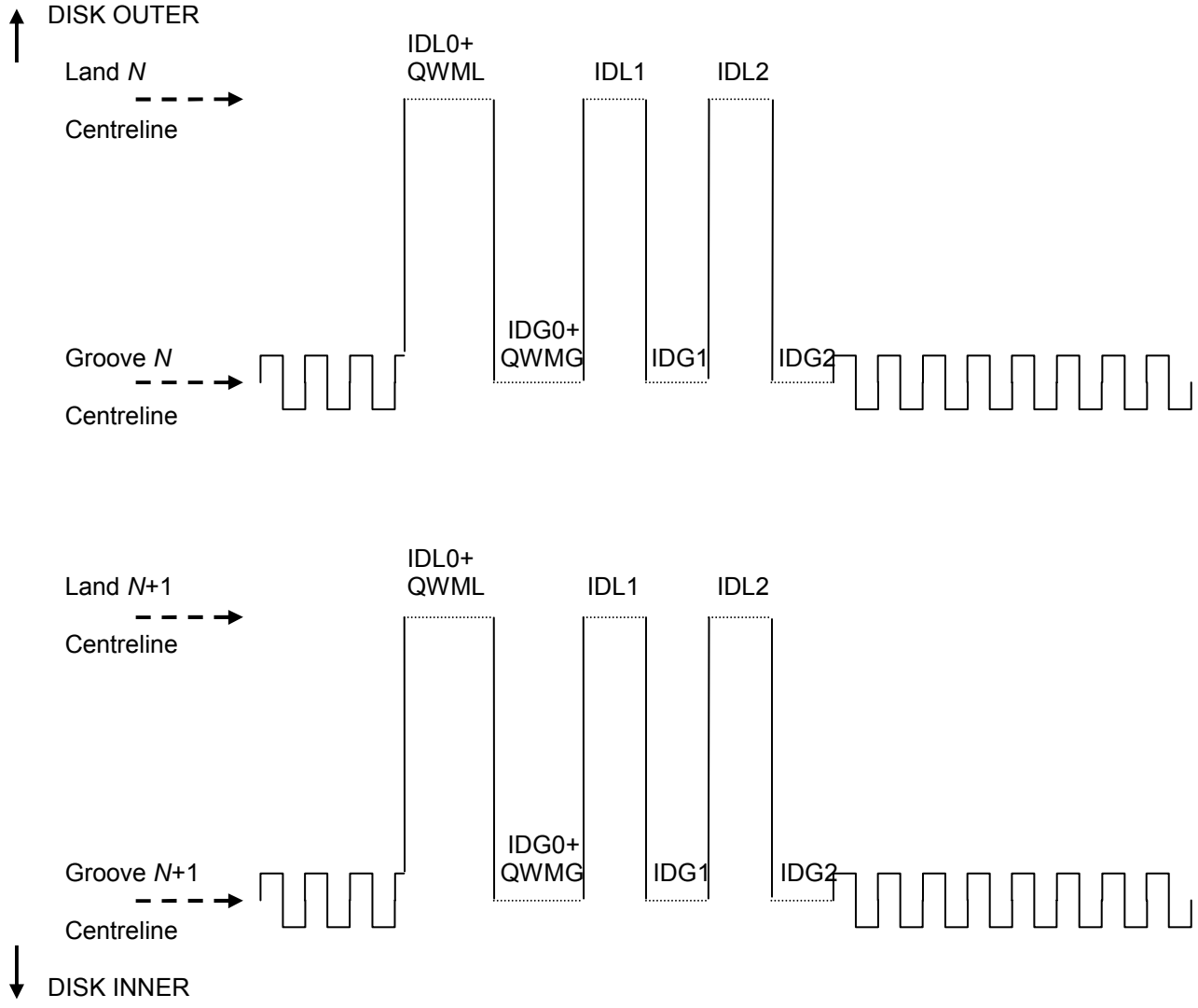

Figure 16 — Preformatted Header and wobble groove displacements

© ISO/IEC 2006 – All rights reserved
Copyright International Organization for Standardization
Provided by IHS under license with ISO
No reproduction or networking permitted without license from IHS
Not for Resale

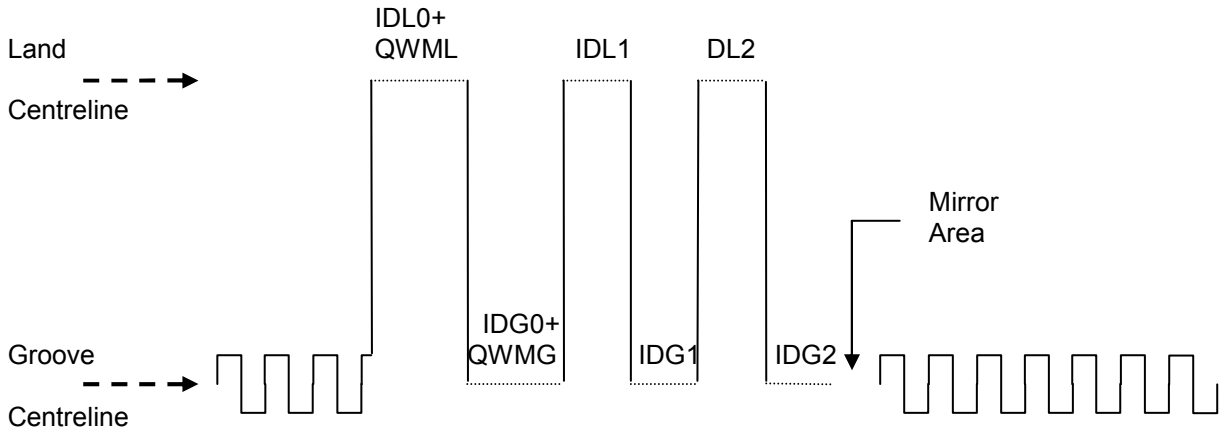

Figure 17 — Mirror Area groove interruption

14 Track format

14.1 Physical Track layout

For Type RW disks, on each track there shall be 14 to 30 sectors per revolution. Each sector shall comprise 122 400 Channel bits. Hence, the length of one Channel bit is determined by the requirement that there are (14 to 30) × 122 400 = 1 713 600 to 3 672 000 Channel bits on a track. The sectors shall be equally spaced over a track in such a way that the distance between the first Channel bit of a sector and the first Channel bit of the next sector shall be 122 400 Channel bits ± 3 Channel bits. At the rotational rate of 32,5 Hz, the period T of a Channel bit equals:

$$T = \frac{10^9}{32{,}5 \times (1\,713\,600 \text{ to } 3\,672\,000)} \text{ ns} = 17{,}96 \text{ to } 8{,}38 \text{ ns}$$

For Type WORM disks, on each track there shall be 13 to 28 sectors per revolution. Each sector shall comprise 121 680 Channel bits. Hence, the length of one Channel bit is determined by the requirement that there are (13 to 28) × 121 680 = 1 581 840 to 3 407 040 Channel bits on a track. The sectors shall be equally spaced over a track in such a way that the distance between the first Channel bit of a sector and the first Channel bit of the next sector shall be 121 680 Channel bits ± 3 Channel bits. At the rotational rate of 35,0 Hz, the period T of a Channel bit equals:

$$T = \frac{10^9}{35{,}0 \times (1\,581\,840 \text{ to } 3\,407\,040)} \text{ ns} = 18{,}06 \text{ to } 8{,}39 \text{ ns}$$

The period of the wobble groove shall be 240 times the Channel clock period for both Type RW and Type WORM media.

Tables 2 and 3 list Channel clock and wobble groove timing information for Type RW and Type WORM media, respectively.

14.2 Physical Block Address (PBA)

Each sector shall be identified using a unique Physical Block Address (PBA).

PBA number 0 shall be located on the land of the first Physical Track that contains Preformatted Headers at a radius 62,50 mm ± 0,10 mm.

Each PBA shall be represented by an unsigned 24-bit value.

© ISO/IEC 2006 – All rights reserved

Copyright International Organization for Standardization
Provided by IHS under license with ISO
No reproduction or networking permitted without license from IHS
Not for Resale

PBA numbers shall be consecutive within a band when read in the following manner:

Starting with the first sector on the Land Recording Track in the band and continuing to follow the spiral on the Land Recording Track until the end of the band; Returning to the first sector on the Groove Recording Track within the same band and continuing to follow the spiral on the Groove Recording Track until the end of the band.

PBA numbers shall be consecutive at each band boundary.

The PBA numbers sharing the same Physical Track shall be related by the following equation:

PBA-G = PBA-L + *n* / 2

where (see 15.2.2)

PBA-L is the PBA value recorded in IDL0, IDL1, and IDL2 fields

PBA-G is the PBA value recorded in IDG0, IDG1, and IDG2 fields

n is the total number of PBAs (sectors) within a band.

The PBA mapping for Type RW media shall be according to table 4.

The PBA mapping for Type WORM media shall be according to table 5

Table 2 — Nominal Channel clock and wobble groove timing for Type RW media at rotational frequency of 32,5 Hz

Band	Sectors per revolution	Channel clock frequency (MHz)	Channel clock period T (ns)	Wobble frequency (kHz)	Wobble period (µs)
0	30	119,34	8,38	497,25	2,011
1	29	115,36	8,67	480,68	2,080
2	28	111,38	8,98	464,10	2,155
3	27	107,41	9,31	447,53	2,235
4	26	103,43	9,67	430,95	2,320
5	25	99,45	10,06	414,38	2,413
6	24	95,47	10,47	397,80	2,514
7	23	91,49	10,93	381,23	2,623
8	22	87,52	11,43	364,65	2,742
9	21	83,54	11,97	348,08	2,873
10	20	79,56	12,57	331,50	3,017
11	19	75,58	13,23	314,93	3,175
12	18	71,60	13,97	298,35	3,352
13	17	67,63	14,79	281,78	3,549
14	16	63,65	15,71	265,20	3,771
15	15	59,67	16,76	248,63	4,022
16	14	55,69	17,96	232,05	4,309

Copyright International Organization for Standardization
Provided by IHS under license with ISO
No reproduction or networking permitted without license from IHS
© ISO/IEC 2006 – All rights reserved
Not for Resale

Table 3 — Nominal Channel clock and wobble groove timing for Type WORM media at rotational frequency of 35,0 Hz

Band	Sectors per revolution	Channel clock frequency (MHz)	Channel clock period T (ns)	Wobble frequency (kHz)	Wobble period (µs)
0	28	119,25	8,39	496,86	2,013
1	27	114,99	8,70	479,12	2,087
2	26	110,73	9,03	461,37	2,167
3	25	106,47	9,39	443,63	2,254
4	24	102,21	9,78	425,88	2,348
5	23	97,95	10,21	408,14	2,450
6	22	93,69	10,67	390,39	2,562
7	21	89,43	11,18	372,65	2,684
8	20	85,18	11,74	354,90	2,818
9	19	80,92	12,36	337,16	2,966
10	18	76,66	13,04	319,41	3,131
11	17	72,40	13,81	301,67	3,315
12	16	68,14	14,68	283,92	3,522
13	15	63,88	15,65	266,18	3,757
14	14	59,62	16,77	248,43	4,025
15	13	55,36	18,06	230,69	4,335

Table 4 — Physical Block Address layout of Type RW Media

Band	Recording Tracks per band	Number of PBAs per band	Radius (mm)	PBA numbers on Land Recording Track	PBA numbers on Groove Recording Track
0	4 592	137 760	62,50 to 60,66	0 to 68 879	68 880 to 137 759
1	5 478	158 862	60,66 to 58,47	137 760 to 217 190	217 191 to 296 621
2	5 448	152 544	58,47 to 56,29	296 622 to 372 893	372 894 to 449 165
3	5 420	146 340	56,29 to 54,12	449 166 to 522 335	522 336 to 595 505
4	5 390	140 140	54,12 to 51,97	595 506 to 665 575	665 576 to 735 645
5	5 362	134 050	51,97 to 49,82	735 646 to 802 670	802 671 to 869 695
6	5 332	127 968	49,82 to 47,69	869 696 to 933 679	933 680 to 997 663
7	5 302	121 946	47,69 to 45,57	997 664 to 1 058 636	1 058 637 to 1 119 609
8	5 274	116 028	45,57 to 43,46	1 119 610 to 1 177 623	1 177 624 to 1 235 637
9	5 244	110 124	43,46 to 41,36	1 235 638 to 1 290 699	1 290 700 to 1 345 761
10	5 214	104 280	41,36 to 39,28	1 345 762 to 1 397 901	1 397 902 to 1 450 041
11	5 186	98 534	39,28 to 37,20	1 450 042 to 1 499 308	1 499 309 to 1 548 575
12	5 156	92 808	37,20 to 35,14	1 548 576 to 1 594 979	1 594 980 to 1 641 383
13	5 128	87 176	35,14 to 33,09	1 641 384 to 1 684 971	1 684 972 to 1 728 559
14	5 098	81 568	33,09 to 31,05	1 728 560 to 1 769 343	1 769 344 to 1 810 127
15	5 068	76 020	31,05 to 29,02	1 810 128 to 1 848 137	1 848 138 to 1 886 147
16	5 058	70 812	29,02 to 27,00	1 886 148 to 1 921 553	1 921 554 to 1 956 959

© ISO/IEC 2006 – All rights reserved
Copyright International Organization for Standardization
Provided by IHS under license with ISO
No reproduction or networking permitted without license from IHS
Not for Resale

Table 5 — Physical Block Address layout of Type WORM Media

Band	Recording Tracks per band	Number of PBAs per band	Radius (mm)	PBA numbers on Land Recording Track	PBA numbers on Groove Recording Track
0	6 976	195 328	62,50 to 59,92	0 to 97 663	97 664 to 195 327
1	6 066	163 782	59,92 to 57,67	195 328 to 277 218	277 219 to 359 109
2	6 044	157 144	57,67 to 55,44	359 110 to 437 681	437 682 to 516 253
3	6 024	150 600	55,44 to 53,21	516 254 to 591 553	591 554 to 666 853
4	6 002	144 048	53,21 to 50,99	666 854 to 738 877	738 878 to 810 901
5	5 982	137 586	50,99 to 48,78	810 902 to 879 694	879 695 to 948 487
6	5 960	131 120	48,78 to 46,57	948 488 to 1 014 047	1 014 048 to 1 079 607
7	5 940	124 740	46,57 to 44,37	1 079 608 to 1 141 977	1 141 978 to 1 204 347
8	5 918	118 360	44,37 to 42,18	1 204 348 to 1 263 527	1 263 528 to 1 322 707
9	5 898	112 062	42,18 to 40,00	1 322 708 to 1 378 738	1 378 739 to 1 434 769
10	5 876	105 768	40,00 to 37,83	1 434 770 to 1 487 653	1 487 654 to 1 540 537
11	5 856	99 552	37,83 to 35 66	1 540 538 to 1 590 313	1 590 314 to 1 640 089
12	5 834	93 344	35 66 to 33,50	1 640 090 to 1 686 761	1 686 762 to 1 733 433
13	5 814	87 210	33,50 to 31,35	1 733 434 to 1 777 038	1 777 039 to 1 820 643
14	5 794	81 116	31,35 to 29,21	1 820 644 to 1 861 201	1 861 202 to 1 901 759
15	5 960	77 480	29,21 to 27,00	1 901 760 to 1 940 499	1 940 500 to 1 979 239

14.3 Sectors with Mirror Area

Sectors that include a Mirror Area shall be as specified in table 6 for Type RW media and in table 7 for Type WORM media.

Sectors with a Mirror Area span 3 complete Physical Tracks in each of three different bands located near the outer, middle, and inner diameter of the disk.

Table 6 — Location of sectors with Mirror Area for Type RW media

Band	Physical Track numbers	PBA numbers on Groove Recording Track IDG
0	200 to 202	74 880 to 74 969
8	21 162 to 21 164	1 177 624 to 1 177 689
16	42 975 to 42 977	1 937 360 to 1 937 401

Table 7 — Location of sectors with Mirror Area for Type WORM media

Band	Physical Track numbers	PBA numbers on Groove Recording Track IDG
0	200 to 202	103 264 to 103 347
8	24 497 to 24 499	1 263 528 to 1 263 587
15	46 572 to 46 574	1 961 040 to 1 961 078

© ISO/IEC 2006 – All rights reserved
Copyright International Organization for Standardization
Provided by IHS under license with ISO
No reproduction or networking permitted without license from IHS
Not for Resale

14.4 Radial alignment

The Headers of the sectors in each band shall be radially aligned in such a way that the distance between the first Channel bits of sectors in adjacent Physical Tracks shall be less than 3 Channel bits.

The wobble groove in each band shall be radially aligned in such a way that the phase difference of the wobble displacement for adjacent grooves shall be less than 3 Channel bits.

The Mirror Area, when present in a sector, shall be radially aligned in such a way that the distance between the first Channel bits of the Mirror Area in the adjacent Physical Tracks that also contain a Mirror Area shall be less than 3 Channel bits.

The Headers of the first sector in all bands shall be radially aligned in such a way that the distance between the first Channel bits of the first sectors of each band shall be less than 120 Channel bits.

15 Sector format

15.1 Sector layout

The Preformatted Header area of each sector consists of 1 892 Channel bits (see figure 18).

Sectors shall have one of the two layouts shown in figure 19 and figure 20 depending on the media Type, RW or WORM. The media Type is specified by the cartridge media identification sensor holes (see 10.5.8), and also indicated by byte 23 of the SDI sectors (see 17.4.4).

In the Preformatted Header area, each data bit shall be represented by 6 Channel bits. In the Data field area, 8-bit bytes shall be represented by 12 Channel bits. (See clause 16).

© ISO/IEC 2006 – All rights reserved

Copyright International Organization for Standardization
Provided by IHS under license with ISO
No reproduction or networking permitted without license from IHS
Not for Resale

	Preformatted Header for Land Recording Track						
	IDL0	QWML	Blank	IDL1	Blank	IDL2	Blank
Number of Channel bits	294	64	358	294	294	294	294
	Total Channel bits= 1892						

	Preformatted Header for Groove Recording Track						
	Blank	IDG0	QWMG	Blank	IDG1	Blank	IDG2
Number of Channel bits	358	294	64	294	294	294	294
	Total Channel bits = 1892						

	IDL, IDG	
	AM	ID
Number of Channel bits	36	258
	Total Channel bits = 294	

IDL, IDG = IDL0, IDL1, IDL2, IDG0, IDG1, IDG2

Figure 18 — Preformatted Header format for Type RW and Type WORM media

Preformatted Header	Gap	Guard1	VFO1	Sync	Data field	PA	Guard2	Buffer	TA
Number of Channel bits per field									
1 892	141 + *M* + *N*	367 – *N*	960	48	118 224	12	240 + *N*	504 – *M* – *N*	12
Total Channel bits = 122 400									

M = 0 to 127, *N* = 0 to 127 (See 15.5, 15.6, and 15.12)

Figure 19 — Sector format for Type RW media

Copyright International Organization for Standardization
Provided by IHS under license with ISO
No reproduction or networking permitted without license from IHS
© ISO/IEC 2006 – All rights reserved
Not for Resale

Preformatted Header	Gap	VAP	VFO1	Sync	Data field	PA	Buffer	TA
Number of Channel bits per field								
1 892	141	255	840	48	118 224	12	256	12
Total Channel bits = 121 680								

Figure 20 — Sector format for Type WORM media

15.2 IDL, IDG

There shall be six IDL, IDG fields in the Preformatted Header designated as IDL0, IDL1, IDL2, IDG0, IDG1, and IDG2. The position of the six fields shall be as follows:

IDL0, IDL1, and IDL2 — Located on the centreline of the Land Recording Track with a tolerance of ± 5 nm

IDG0, IDG1, and IDG2 — Located on the centreline of the Groove Recording Track with a tolerance of ± 5 nm

The format of these six fields shall be identical and shall contain AM and ID sub-fields (see figure 18).

15.2.1 Address Mark (AM)

The Address Mark shall consist of an embossed pattern that does not occur elsewhere in the ID field. The field is intended to give the drive STOB bit synchronization (see 16.1) for the following ID field. It shall have length of 36 Channel bits with the following pattern:

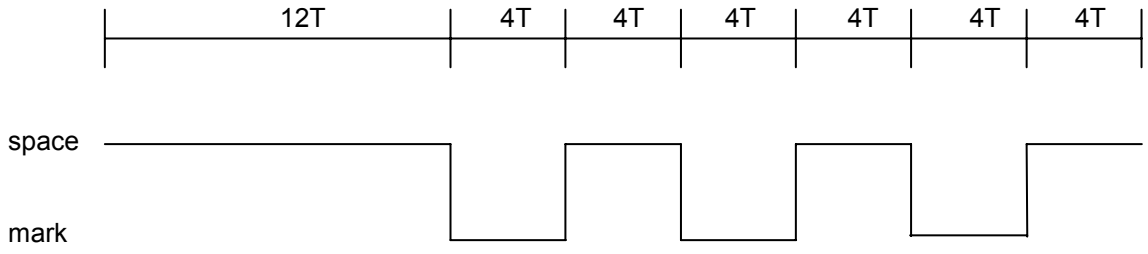

Figure 21 — Address Mark field pattern

15.2.2 ID

The six ID fields shall each contain the PBA number and CRC bytes. Each field shall consist of six bytes with the following contents:

1st byte:

Bits 7 to 3 — Shall all be assumed to be ZEROs for CRC calculation, but not recorded in the ID field.

Bit 2 — Shall specify the groove or land type of ID field, IDG or IDL.

When set to 0 it shall mean an IDG field (IDG0, IDG1, or IDG2).

When set to 1 it shall mean an IDL field (IDL0, IDL1, or IDL2).

© ISO/IEC 2006 All rights reserved

Copyright International Organization for Standardization
Provided by IHS under license with ISO
No reproduction or networking permitted without license from IHS
Not for Resale

Bits 1 and 0 Shall specify the ID number.

When set to 0 it shall mean the ID0 field (IDL0 or IDG0).

When set to 1 it shall mean the ID1 field (IDL1 or IDG1).

When set to 2 it shall mean the ID2 field (IDL2 or IDG2).

2nd byte: This byte shall be the 8 most significant bits of the PBA (PBA_{23-16}).

3rd byte: This byte shall be the next 8 most significant bits of the PBA (PBA_{15-8}).

4th byte: This byte shall be the 8 least significant bits of the PBA (PBA_{7-0}).

5th and 6th bytes: These two bytes shall specify a 16-bit CRC computed over the first four bytes of this field (see Annex F).

The most significant bit of each byte shall be recorded first.

The 43 ID data bits shall be encoded into 258 Channel bits as defined in 16.1.

15.3 Blank fields

There shall be Blank fields, with no marks, in the Preformatted Header as shown in figure 18.

15.4 Quadrature Wobble Marks (QWM)

This field of the Preformatted Header shall consist of 64 Channel bits following the ID0 field (IDL0 or IDG0).

The QWM field shall consist of long marks with two different patterns as shown on figure 22:

Pattern A: Pattern A shall be located on all even numbered Physical Tracks beginning Physical Track number 0. Pattern A shall start with PBA number 0.

Pattern B: Pattern B shall be located on all odd numbered Physical Tracks beginning with Physical Track number 1.

The QWML field following IDL0 shall be aligned with the centreline of the Land Recording Track with a tolerance of $\pm$ 5 nm. The QWMG field following IDG0 shall be aligned with the centreline of the Groove Recording Track with a tolerance of $\pm$ 5 nm.

The QWM pattern could be used by the drive for control of radial tracking offset (based on the measurement of relative amplitudes of read signal of these patterns, see Annex X).

© ISO/IEC 2006 – All rights reserved
Copyright International Organization for Standardization
Provided by IHS under license with ISO
No reproduction or networking permitted without license from IHS
Not for Resale

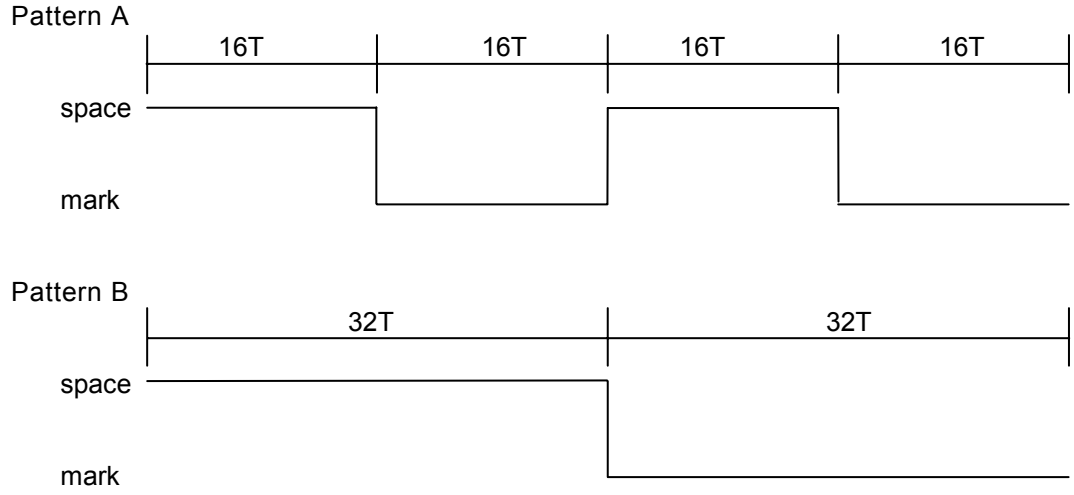

Figure 22 — Quadrature Wobble Mark field patterns

15.5 Gap

There shall be a Gap field in each sector. The length of the Gap field is variable for Type RW media, and fixed for Type WORM media. The Gap field is the first field after the Preformatted Header and gives the drive some time for processing after it has finished reading the Header.

The length of the Gap field shall be equal to 141 + *M* + *N* Channel bits for each sector of Type RW media. The values of *M* and *N* are:

M = 0 to 127

N = 0 to 127.

M and *N* shall be determined by the Start Position Shift (SPS) random signal generator (see Annex Y). The purpose of changing the length of the gap field is to vary the physical location of the start of data written to the disk. Varying the start position extends the number of rewrite cycles for Type RW recording layer materials.

The length of the Gap field shall be equal to 141 Channel bits for each sector of Type WORM media.

The content of the Gap field is not specified, and shall be ignored in interchange.

15.6 Guard

There shall be Guard fields in each sector of Type RW media. These fields are not included for sectors of Type WORM media.

The Guard1 and Guard2 fields shall be variable in length from 240 to 367 Channel bits:

- The length of the Guard1 field shall be equal to 367 – *N* Channel bits.

- The length of the Guard2 field shall be equal to 240 + *N* Channel bits.

where *N* is a value from 0 to 127 determined by the SPS random signal generator (see Annex Y).

The Guard fields shall be written with the following patterns

--`,,```,,,,````-`-`,,`,,`,`,,`---
© ISO/IEC 2006 – All rights reserved
Copyright International Organization for Standardization
Provided by IHS under license with ISO
No reproduction or networking permitted without license from IHS
Not for Resale

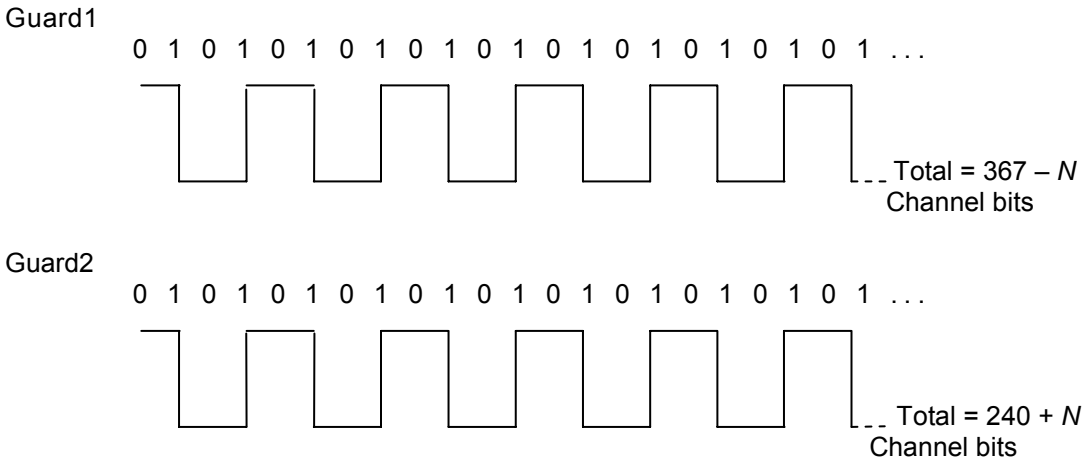

Figure 23 — Guard field patterns

The contents of the Guard fields shall be ignored in interchange.

15.7 Verify and Protect (VAP)

There shall be a VAP field in each sector of Type WORM media. This field is not included for sectors of Type RW media.

The VAP field shall be equal to 255 Channel bits in length. The VAP field is intended to detect a sector has been previously written and verified, and protect such sectors from accidentally being over-written.

The VAP field, if written, shall contain 240 Channel bits of 4T marks and 4T spaces terminated in a 15 Channel bit space (see figure 25). The terminating space allows a buffer between the end of the 4T mark and 4T space pattern and the beginning of the VFO1 field. This buffer is necessary since VFO1 and VAP fields are written at different times. The terminating space also provides some processing time for the drive to check the VAP field prior to writing.

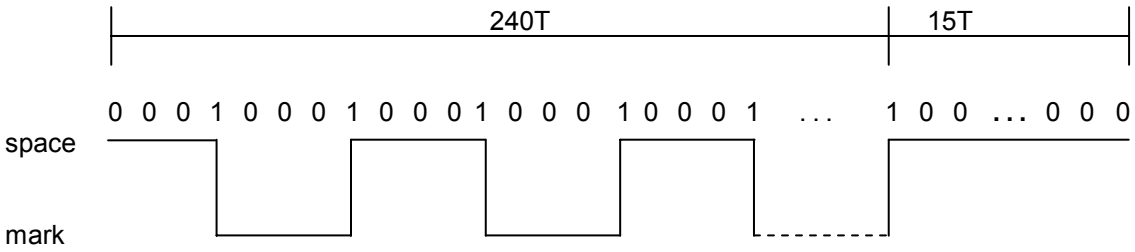

Figure 24 — VAP field pattern

The VAP field shall be read immediately prior to writing any data to a sector. If the VAP field is detected as being written, the write of the sector shall be terminated before the beginning of VFO1.

The VAP field shall only be written during the first optional verify pass of the data. The VAP field shall not be written during any other condition or operation.

15.8 VFO1, VFO2

There shall be two fields (see figure 25) designated VFO1 (see 15.1) and VFO2 (see 15.10) to synchronize the VFO.

These fields shall be written by the drive when data is recorded in the sector.

--`,,```,,,,````-`-`,,`,,`,`,,`---
© ISO/IEC 2006 – All rights reserved
Copyright International Organization for Standardization
Provided by IHS under license with ISO
No reproduction or networking permitted without license from IHS
Not for Resale

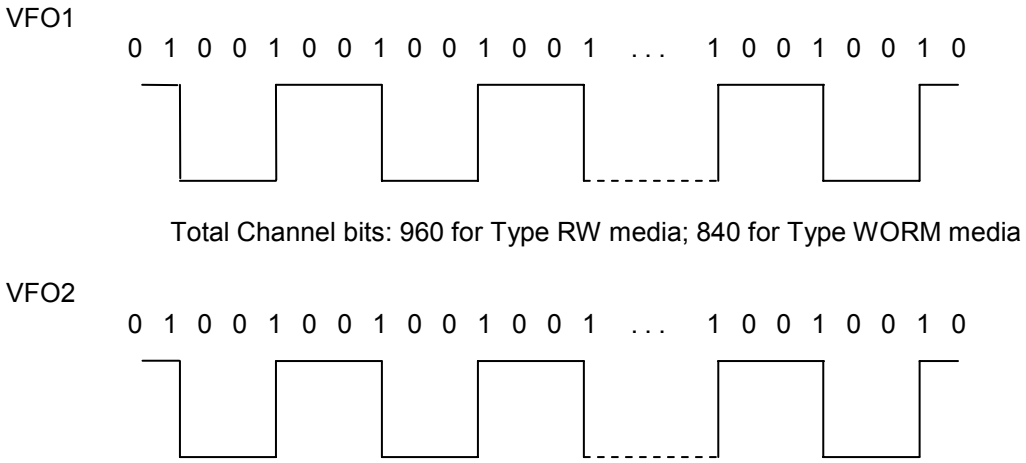

Figure 25 — VFO1, VFO2 field patterns

15.9 Sync

The Sync field is intended to allow the drive to obtain byte synchronization for the following Data field. The Sync field content is unique and does not exist elsewhere in data. It shall have length of 48 Channel bits and be recorded with the bit pattern

010 000 001 000 000 010 000 000 010 000 000 010 000 000 100 000

15.10 Data field

The Data field is intended for recording user data. It shall consist of 9 852 bytes comprising:

8 192 user bytes,

1 232 bytes for Control, CRC, ECC,

124 bytes for Resync,

249 bytes for Reference,

50 bytes for VFO2,

4 bytes for Extra Sync, and

1 byte for Extra Reference.

All bytes in the Data field except Resync, Reference, VFO2, Extra Sync, and Extra Reference fields shall be scrambled in accordance with Annex G.

The disposition of these bytes in the Data field shall be as specified in Annex H.

The Data field shall be encoded into Channel bits as defined in 16.2.

© ISO/IEC 2006 – All rights reserved
Copyright International Organization for Standardization
Provided by IHS under license with ISO
No reproduction or networking permitted without license from IHS
Not for Resale

15.10.1 User data bytes

These bytes are at the disposal of the user for recording information. There shall be 8 192 such bytes per sector.

15.10.2 CRC and ECC bytes

The Cyclic Redundancy Code bytes and Error Correction Code bytes are used by the error detection and correction system to rectify erroneous data. The ECC shall be a Reed-Solomon code of degree 32.

The computation of the check bytes of the CRC and ECC shall be as specified in Annex H.

15.10.3 Control bytes

There shall be 12 Control bytes written after the user data bytes. The location of the Control bytes in the Data field shall be as specified in Annex H.

The first 4 bytes (P1) shall be recorded with the 4 bytes Logical Block Address (LBA) of the sector.

The second 4 bytes (P2) shall be recorded with the 4 bytes Physical Block Address (PBA) from the ID field of the sector.

The remaining 4 bytes (P3) shall be recorded with the 4 bytes Drive Information Record (DIR). The Drive Information Record shall be used as specified in Annex I.

15.10.4 Resync bytes

The Resync bytes enable a drive to regain byte synchronization after a large defect in the Data field. Annex J specifies the Resync bytes and the criteria for selection of which of the two patterns is to be used.

The Resync fields shall be inserted among the rest of the bytes of the Data field as specified in Annex H.

15.10.5 Reference byte

The Reference byte provides 3T read signal amplitude information for the drive data decoder. The Reference bytes may also be used to detect data dropout conditions and identify the location for application of erasure ECC correction.

Annex J specifies the Reference byte. The Reference fields shall be inserted among the rest of the Data field as specified in Annex H.

15.11 Postamble (PA)

The PA field shall have a nominal length of 12 Channel bits which shall be used for RLL(1,7) closure. This field shall be encoded with the data byte (FF) and end in a space.

15.12 Buffer

The Buffer field is used to accommodate the various system tolerances. Causes of variation are as follows: Header-to-Header spacing as specified in 14.1 and the actual length of the written data as determined by the runout of the track, speed variation of the disk, and wobble groove PLL timing error.

The length of the Buffer field shall be variable and depends on the length of the SPS random signal generator values *M* and *N* for Type RW media, and shall equal 504 – *M* – *N* Channel bits.

The length of the Buffer field shall be fixed for Type WORM media, and shall equal 256 Channel bits.

The minimum Buffer field length is approximately 0,2 % of the total sector length.

© ISO/IEC 2006 – All rights reserved
Copyright International Organization for Standardization
Provided by IHS under license with ISO
No reproduction or networking permitted without license from IHS
Not for Resale

15.13 Transition Area (TA)

This area is used for transition from the grooved areas to embossed Headers and shall be equal in length to 12 Channel bits. This area shall not contain user information.

16 Recording codes

16.1 Preformatted Header

The 43 data bits in each of the six ID fields shall be encoded into Channel bits on the disk using the Six Times Oversampled Bi-Phase (STOB) as defined in figure 26.

All other Preformatted Header fields in a sector have already been defined in terms of Channel bits.

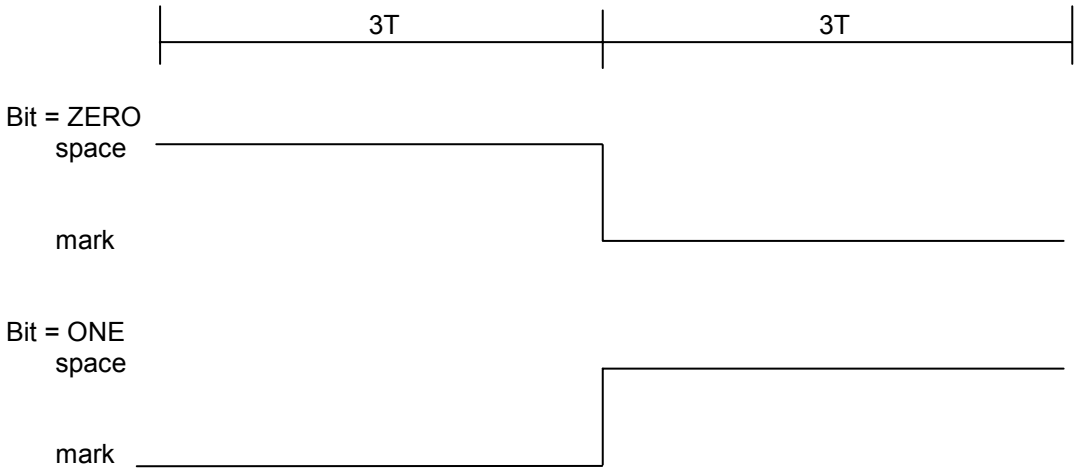

Figure 26 — STOB bit patterns

16.2 Data field

The 8-bit bytes in the Data field shall be encoded into Channel bits on the disk according to table 8 and Annex H. Channel bits in the Data field shall be decoded into information bits according to table 9 and Annex H. All other fields in the Data field have already been defined in terms of Channel bits. Write pulses shall produce a mark in a manner such that the edge between a mark and a space or a space and a mark corresponds to a Channel bit that is a ONE.

The recording code used to record all data in the Data fields of the disk shall be the run-length limited code known as RLL(1,7) as defined in tables 8 and 9.

© ISO/IEC 2006 All rights reserved

Copyright International Organization for Standardization
Provided by IHS under license with ISO
No reproduction or networking permitted without license from IHS
Not for Resale

Table 8 — Encoding of input bits to Channel bits

Preceding Channel bit	Current input bits	Channel bits RLL(1,7)	Group
0	01	100	A
1	01	000	A
x	10	010	A
0	11	101	A
1	11	001	A
0	00 01	100 001	B
1	00 01	000 001	B
0	00 10	100 000	B
1	00 10	000 000	B
x	00 11	010 001	B
x	00 00	010 000	B

The coding shall start at the first bit of the first byte of the field to be converted. The preceding Channel bit to the first byte is assumed to be ZERO.

Basically two input bits translate into three Channel bits (group A). However, if the two input bits are ZERO ZERO, then the next two input bits are also evaluated, and the four input bits translate into six Channel bits (group B).

Resync and Reference fields shall be ignored for encoding of the input data. Resync and Reference bytes must be inserted into the Channel bit data at the proper locations after encoding.

The insertion of the Resync and Reference fields does not effect closure of the RLL(1,7) encoded data. Closure of the last data byte occurs in the PA field.

Table 9 — Decoding of Channel bits to information bits

Preceding Channel bits	Current Channel bits	Following Channel bits	Decoded information bits
xx	010	00	00
xx	010	01 or 10	10
01	000	00	00
01	000	01 or 10	01
10	000	xx	00
00	000	xx	10
xx	100	00	00
xx	100	01 or 10	01
00	001	xx	01
01 or 10	001	xx	11
xx	101	xx	11

Resync and Reference fields shall be ignored for decoding of channel data. Resync and Reference bytes must be removed from the Channel bit data at the proper locations prior to decoding.

--`,,```,,,,````-`-`,,`,,`,`,,`---
© ISO/IEC 2006 – All rights reserved
Copyright International Organization for Standardization
Provided by IHS under license with ISO
No reproduction or networking permitted without license from IHS
Not for Resale

17 Formatted Zone

17.1 General description of the Formatted Zone

The Formatted Zone contains all information on the disk relevant for data interchange. This information comprises embossed tracking provisions, embossed Headers, and possibly user written data. In this clause the term "data" is reserved for the content of the Data field of a sector, which, in general, is transferred to the host.

Clause 17 defines the layout of the information. The characteristics of signals obtained from this information are specified in sections 4 and 6.

17.2 Division of the Formatted Zone

The Formatted Zone shall be divided into zones at the radius values specified by table 10.

These zones shall correspond to PBA numbers indicated in table 11 for Type RW media and table 12 for Type WORM media.

The dimensions are given as reference only, and are nominal locations. The tolerance on the location of PBA number 0 is specified in 14.2. The tolerances on the other radii are determined by the tolerance on the track pitch as specified in 13.5.

PBA numbers not listed in table 11 and 12 are used to provide boundary guard tracks between bands and buffer tracks between recording zones. These sectors shall not be recorded by the media manufacturer or the drive system.

The entire Formatted Zone shall be reflective and have the same recording layer.

© ISO/IEC 2006 – All rights reserved

Copyright International Organization for Standardization
Provided by IHS under license with ISO
No reproduction or networking permitted without license from IHS
Not for Resale

Table 10 — Layout of the Formatted Zone by radius

Formatted Zone	Radius (mm)			
	Type RW media		Type WORM media	
	Band		Band	
Lead-in	0	62,50 to 62,18	0	62,50 to 62,20
User Zone 0	0	62,18 to 60,71	0	62,20 to 59,96
Outer Read Focus Offset	0	60,71 to 60,71	0	59,96 to 59,96
Outer Read Reference	0	60,71 to 60,71	0	59,96 to 59,96
Outer Manufacturer	0	60,71 to 60,67	0	59,96 to 59,92
User Zone 1	1	60,66 to 58,47	1	59,92 to 57,68
User Zone 2	2	58,47 to 56,30	2	57,67 to 55,44
User Zone 3	3	56,29 to 54,13	3	55,44 to 53,21
User Zone 4	4	54,12 to 51,97	4	53,21 to 50,99
User Zone 5	5	51,97 to 49,83	5	50,99 to 48,78
User Zone 6	6	49,82 to 47,69	6	48,77 to 46,57
Outer SDI	7	47,69 to 47,69	7	46,57 to 46,57
Outer DDS	7	47,69 to 47,69	7	46,57 to 46,57
User Zone 7 (including DMA)	7	47,69 to 45,58	7	46,57 to 44,38
Inner SDI	7	45,58 to 45,58	7	44,38 to 44,38
Inner DDS	7	45,58 to 45,58	7	44,38 to 44,38
PDL3	7	45,58 to 45,57	7	44,38 to 44,37
User Zone 8	8	45,57 to 43,57	8	44,37 to 42,81
Middle Read Focus Offset	8	43,57 to 43,56	8	42,81 to 42,81
Middle Read Reference	8	43,56 to 43,56	8	42,81 to 42,80
Write Power Calibration	8	43,56 to 43,52	8	42,80 to 42,24
Middle Manufacturer	8	43,52 to 43,46	8	42,24 to 42,18
User Zone 9	9	43,46 to 41,37	9	42,18 to 40,00
User Zone 10	10	41,36 to 39,28	10	40,00 to 37,83
User Zone 11	11	39,28 to 37,21	11	37,82 to 35,66
User Zone 12	12	37,20 to 35,14	12	35,66 to 33,50
User Zone 13	13	35,14 to 33,09	13	33,50 to 31,35
User Zone 14	14	33,09 to 31,05	14	31,35 to 29,21
User Zone 15	15	31,05 to 29,03	15	29,20 to 28,27
User Zone 16	16	29,02 to 28,37		
Inner Read Focus Offset	16	28,37 to 28,37	15	28,27 to 28,27
Inner Read Reference	16	28,37 to 28,37	15	28,27 to 28,27
Inner Manufacturer	16	28,37 to 28,28	15	28,27 to 28,18
Lead-out	16	28,28 to 27,00	15	28,18 to 27,00

© ISO/IEC 2006 – All rights reserved
Copyright International Organization for Standardization
Provided by IHS under license with ISO
No reproduction or networking permitted without license from IHS
Not for Resale

Table 11 — Layout of the Formatted Zone by Physical Block Address for Type RW media

Formatted Zone	Band	PBA numbers on Land Recording Track	PBA numbers on Groove Recording Track
Lead-in	0	0 to 11 999	68 880 to 80 879
User Zone 0	0	12 000 to 67 079	80 880 to 135 959
Outer Read Focus Offset	0	67 080 to 67 169	135 960 to 136 049
Outer Read Reference	0	67 170 to 67 259	136 050 to 136 139
Outer Manufacturer	0	67 290 to 68 789	136 170 to 137 669
User Zone 1	1	137 847 to 217 103	217 278 to 296 534
User Zone 2	2	296 706 to 372 809	372 978 to 449 081
User Zone 3	3	449 247 to 522 254	522 417 to 595 424
User Zone 4	4	595 584 to 665 497	665 654 to 735 567
User Zone 5	5	735 721 to 802 595	802 746 to 869 620
User Zone 6	6	869 768 to 933 607	933 752 to 997 591
Outer SDI	7	997 733 to 977 755	1 058 706 to 1 058 728
Outer DDS	7	997 756 to 997 778	1 058 729 to 1 058 751
User Zone 7 (including DMA)	7	997 779 to 1 058 383	1 058 752 to 1 119 356
Inner SDI	7	1 058 384 to 1 058 406	1 119 357 to 1 119 379
Inner DDS	7	1 058 407 to 1 058 429	1 119 380 to 1 119 402
PDL3 (Groove only)	7		1 119 403 to 1 119 540
User Zone 8	8	1 119 676 to 1 174 741	1 177 690 to 1 232 755
Middle Read Focus Offset	8	1 174 742 to 1 174 807	1 232 756 to 1 232 821
Middle Read Reference	8	1 174 808 to 1 174 873	1 232 822 to 1 232 887
Write Power Calibration	8	1 174 896 to 1 175 995	1 232 910 to 1 234 009
Middle Manufacturer	8	1 176 018 to 1 177 557	1 234 032 to 1 235 571
User Zone 9	9	1 235 701 to 1 290 636	1 290 763 to 1 345 698
User Zone 10	10	1 345 822 to 1 397 841	1 397 962 to 1 449 981
User Zone 11	11	1 450 099 to 1 499 251	1 499 366 to 1 548 518
User Zone 12	12	1 548 630 to 1 594 925	1 595 034 to 1 641 329
User Zone 13	13	1 641 435 to 1 684 920	1 685 023 to 1 728 508
User Zone 14	14	1 728 608 to 1 769 295	1 769 392 to 1 810 079
User Zone 15	15	1 810 173 to 1 848 092	1 848 183 to 1 886 102
User Zone 16	16	1 886 190 to 1 897 515	1 921 596 to 1 932 921
Inner Read Focus Offset	16	1 897 516 to 1 897 557	1 932 922 to 1 932 963
Inner Read Reference	16	1 897 558 to 1 897 559	1 932 964 to 1 933 005
Inner Manufacturer	16	1 897 614 to 1 899 153	1 933 020 to 1 934 559
Lead-out	16	1 899 154 to 1 921 553	1 934 560 to 1 956 959

© ISO/IEC 2006 – All rights reserved
Copyright International Organization for Standardization
Provided by IHS under license with ISO
No reproduction or networking permitted without license from IHS
Not for Resale

Table 12 — Layout of the Formatted Zone by Physical Block Address for Type WORM media

Formatted Zone	Band	PBA numbers on Land Recording Track	PBA numbers on Groove Recording Track
Lead-in	0	0 to 11 199	97 664 to 108 863
User Zone 0	0	11 200 to 95 983	108 864 to 193 647
Outer Read Focus Offset	0	95 984 to 96 067	193 648 to 193 731
Outer Read Reference	0	96 068 to 96 151	193 732 to 193 815
Outer Manufacturer	0	96 180 to 97 579	193 844 to 195 243
User Zone 1	1	195 409 to 277 137	277 300 to 359 028
User Zone 2	2	359 188 to 437 603	437 660 to 516 175
User Zone 3	3	516 329 to 591 478	591 629 to 666 778
User Zone 4	4	666 926 to 738 805	738 950 to 810 829
User Zone 5	5	810 971 to 879 625	879 764 to 948 418
User Zone 6	6	948 554 to 1 013 981	1 014 114 to 1 079 541
Outer SDI	7	1 079 671 to 1 079 691	1 142 041 to 1 142 061
Outer DDS	7	1 079 692 to 1 079 712	1 142 062 to 1 142 082
User Zone 7 (including DMA)	7	1 079 713 to 1 141 746	1 142 083 to 1 204 116
Inner SDI	7	1 141 747 to 1 141 767	1 204 117 to 1 204 137
Inner DDS	7	1 141 768 to 1 141 788	1 204 138 to 1 204 158
PDL3 (Groove only)	7		1 204 159 to 1 204 284
User Zone 8	8	1 204 408 to 1 246 607	1 263 588 to 1 305 787
Middle Read Focus Offset	8	1 246 608 to 1 246 667	1 305 788 to 1 305 847
Middle Read Reference	8	1 246 668 to 1 246 727	1 305848 to 1 305 907
Write Power Calibration	8	1 246 748 to 1 262 047	1 305 928 to 1 321 227
Middle Manufacturer	8	1 262 068 to 1 263 467	1 321 248 to 1 322 647
User Zone 9	9	1 322 765 to 1 378 681	1 378 796 to 1 434 712
User Zone 10	10	1 434 824 to 1 487 599	1 487 708 to 1 540 483
User Zone 11	11	1 540 589 to 1 590 262	1 590 365 to 1 640 038
User Zone 12	12	1 640 138 to 1 686 713	1 686 810 to 1 733 385
User Zone 13	13	1 733 479 to 1 776 993	1 777 084 to 1 820 598
User Zone 14	14	1 820 686 to 1 861 159	1 861 244 to 1 901 717
User Zone 15	15	1 901 799 to 1 918 178	1 940 539 to 1 956 918
Inner Read Focus Offset	15	1 918 179 to 1 918 217	1 956 919 to 1 956 957
Inner Read Reference	15	1 918 218 to 1 918 256	1 956 958 to 1 956 996
Inner Manufacturer	15	1 918 270 to 1 919 699	1 957 010 to 1 958 439
Lead-out	15	1 919 700 to 1 940 499	1 958 440 to 1 979 239

17.2.1 Lead-in Zone

The Lead-in Zone shall be used for positioning purposes only. The Lead-in Zone shall comprise 800 Recording Tracks.

© ISO/IEC 2006 – All rights reserved
Copyright International Organization for Standardization
Provided by IHS under license with ISO
No reproduction or networking permitted without license from IHS
Not for Resale

17.2.2 Read Focus Offset (RFO) Zones

There shall be an Outer, Middle, and Inner Read Focus Offset Zone on each side of the disk. They are intended to allow drives to adjust the focus offset to the optimal read conditions for the disk.

The Read Focus Offset Zones shall be recorded by the media manufacturer, and shall not be written or modified by the drive system. All three of the Read Focus Offset Zones shall contain identical test data patterns as specified in 17.3.

The recorded data marks shall satisfy the requirements for signals specified in clause 25.

17.2.2.1 Outer Read Focus Offset Zone

The Outer Read Focus Offset Zone shall be located in Band 0.

The Outer Read Focus Offset Zone shall comprise 6 Recording Tracks.

17.2.2.2 Middle Read Focus Offset Zone

The Middle Read Focus Offset Zone shall be located in Band 8.

The Middle Read Focus Offset Zone shall comprise 6 Recording Tracks.

17.2.2.3 Inner Read Focus Offset Zone

The Inner Read Focus Offset Zone shall be located in Band 16 for Type RW media and in Band 15 for Type WORM media.

The Inner Read Focus Offset Zone shall comprise 6 Recording Tracks.

17.2.3 Read Reference Zones

There shall be an Outer, Middle, and Inner Read Reference Zone on each side of the disk. They are intended to allow drives to quantify the read performance (byte error rate) and PLL jitter.

The Read Reference Zones shall be recorded by the media manufacturer, and shall not be written or modified by the drive system. All three of the Read Reference Zones shall contain identical test data patterns as specified in 17.3.

The recorded data marks shall satisfy the requirements for signals specified in clause 25.

17.2.3.1 Outer Read Reference Zone

The Outer Read Reference Zone shall be located in Band 0.

The Outer Read Reference Zone shall comprise 6 Recording Tracks.

17.2.3.2 Middle Read Reference Zone

The Middle Read Reference Zone shall be located in Band 8.

The Middle Read Reference Zone shall comprise 6 Recording Tracks.

17.2.3.3 Inner Read Reference Zone

The inner Read Reference Zone shall be located in Band 16 for Type RW media and in Band 15 for Type WORM media.

© ISO/IEC 2006 – All rights reserved

Copyright International Organization for Standardization
Provided by IHS under license with ISO
No reproduction or networking permitted without license from IHS
Not for Resale

The Inner Read Reference Zone shall comprise 6 Recording Tracks.

17.2.4 Manufacturer Zones

There shall be an Outer, Middle, and Inner Manufacturer Zone on each side of the disk. They are provided to allow the media manufacturers to perform tests on the disk, including read and write calibration operations, in areas located away from that intended for user recorded information. The sectors contained in the Manufacturer Zones may be used at the discretion of the media manufacturer.

The Manufacturer Zones are intended for quality tests by the media manufacturer. They should not be used by drives and shall be ignored in interchange.

17.2.4.1 Outer Manufacturer Zone

The Outer Manufacturer Zone shall be located in Band 0.

The Outer Manufacturer Zone shall comprise 100 Recording Tracks.

17.2.4.2 Middle Manufacturer Zone

The Middle Manufacturer Zone shall be located in Band 8.

The Middle Manufacturer Zone shall comprise 140 Recording Tracks.

17.2.4.3 Inner Manufacturer Zone

The Inner Manufacturer Zone shall be located in Band 16 for Type RW media and in Band 15 for Type WORM media.

The Inner Manufacturer Zone shall comprise 220 Recording Tracks.

17.2.5 SDI Zones

The two, Outer and Inner, SDI Zones on each side of the disk shall be used for recording Specific Disk Information (see 17.4).

The SDI Zones shall consist of sectors recorded by the same modulation method and format as is used in the User Zone (see clauses 15 and 16).

17.2.5.1 Outer SDI Zone

The Outer SDI Zone shall be located near the outer radius of Band 7.

The Outer SDI Zone shall comprise 2 Recording Tracks.

17.2.5.2 Inner SDI Zone

The Inner SDI Zone shall be located near the inner radius of Band 7.

The Inner SDI Zone shall comprise 2 Recording Tracks.

17.2.6 DDS Zones

The two, Outer and Inner, DDS Zones on each side of the disk shall be used for recording the Disk Definition Structure (see 18.5).

-`,,```,,,,````-`-`,,`,,`,`,,`---
© ISO/IEC 2006 – All rights reserved
Copyright International Organization for Standardization
Provided by IHS under license with ISO
No reproduction or networking permitted without license from IHS
Not for Resale

The DDS Zones shall consist of sectors recorded by the same modulation method and format as is used in the User Zone (see clauses 15 and 16).

17.2.6.1 Outer DDS Zone

The Outer DDS Zone shall be located near the outer radius of Band 7.

The Outer DDS Zone shall comprise 2 Recording Tracks.

17.2.6.2 Inner DDS Zone

The Inner DDS Zone shall be located near the inner radius of Band 7.

The Inner DDS Zone shall comprise 2 Recording Tracks.

17.2.7 PDL3 Zone

The PDL3 Zone shall be located near the inner radius of Band 7.

The PDL3 Zone shall be used to record a redundant version of the two Primary Defect Lists (PDL1 and PDL2) that are contained in the Defect Management Area (see 18.4).

The PDL3 Zone shall comprise 6 Groove Recording Tracks. The 7 adjacent Land Recording Tracks shall not be recorded.

17.2.8 Write Power Calibration Zone

The Write Power Calibration Zone is intended for tests to enable a drive to optimize its write power and shall not be used by media manufacturers.

The Write Power Calibration Zone shall be located in Band 8.

The Write Power Calibration Zone shall comprise 100 Recording Tracks for Type RW media and 1 530 Recording Tracks for Type WORM media.

For Type RW media, the tracks and sectors used for testing should be chosen from the Write Calibration Zone in a random way, so as to ensure a gradual degradation of the entire Write Calibration Zone due to use. Then each track in this zone will remain representative for the characteristics of the tracks in the User Zones of the disk.

For Type WORM media, the sectors should be used sequentially by PBA for Land Recording Tracks until depleted, and then followed sequentially by PBA for Groove Recording Tracks within the Write Calibration Zone.

The recommended write power calibration data test pattern is specified in 17.3.

The Write Power Calibration Zone shall be ignored in interchange.

17.2.9 User Zones

The Data fields in the User Zones shall contain user written data in the format of clause 15. The layout of the User Zones and their sub-divisions is specified in clause 18.

17.2.10 Lead-out Zone

The Lead-out Zone shall be used for positioning purposes only. The Lead-out Zone shall comprise 3 200 Recording Tracks.

© ISO/IEC 2006 – All rights reserved

Copyright International Organization for Standardization
Provided by IHS under license with ISO
No reproduction or networking permitted without license from IHS
Not for Resale

17.3 Drive test data patterns

The test patterns used to perform drive calibration for optimal read and write performance are listed in table 13. The purpose of the test patterns is to generate specific encoded channel patterns that can be used to evaluate read signal characteristics.

The test data patterns used in the Read Focus and Read Reference zones shall be as specified in table 13. They shall be written under the following special conditions:

- Test sectors shall be written with data scrambler and ECC disabled/enabled as shown on table 13.
- The Control bytes, CRC bytes, and ECC parity bytes of test sectors shall be written with the test pattern when ECC is disabled.
- The test user data pattern shall be repeated to fill the entire Data field of test sectors.

The suggested write power calibration test pattern consists of a repeated 8T mark and 8T space without inserted synchronization fields (Sync and Resync). This is an illegal data pattern for the RLL(1,7) encoder / decoder. The test pattern is recorded with varying write power within a single sector to determine the optimal recording power.

Table 13 — Drive Test Zone data patterns

Drive test zones	Write power	Data scrambler	ECC	User data pattern	Encoded channel pattern
Read Focus Offset zones	Nominal	Disabled	Disabled	(BB BB AA AA AA AA 00 00)	2T-3T-6T
Read Reference zones	Nominal	Enabled	Enabled	(00)	Pseudo-random
Write Power Calibration zone	Varying				8T- 8T (suggested)

17.4 SDI Zones usage

The two SDI Zones shall be recorded using the thermo-optical Phase Change recording method in the sector format specified in clause 15. The recorded data marks shall satisfy the requirements for signals specified in clause 25.

Both of the SDI Zones shall be recorded by the media manufacturer, and shall not be written or modified by the drive system. Both of the SDI Zones shall contain identical information.

17.4.1 SDI amendment

The SDI Zones shall initially be recorded only in every fourth sector, as shown in tables 14 and 15. The media manufacturer may use the three unrecorded sectors between the recorded sectors to allow for amendment of the SDI data. Up to three amendments to the SDI can be made.

The disk drive system shall use the latest amended SDI data, as determined by the sectors that have been written. Table 14 and 15 list the Physical Block Addresses of the SDI sectors for the initial and amended cases, for Types RW and WORM media.

--`,,```,,,,````-`-`,,`,,`,`,,`---

© ISO/IEC 2006 – All rights reserved
Copyright International Organization for Standardization
Provided by IHS under license with ISO
No reproduction or networking permitted without license from IHS
Not for Resale

Table 14 — SDI Sectors by Physical Block Address for Type RW media

Outer SDI Zone				Inner SDI Zone			
Initial	**Amend 1**	**Amend 2**	**Amend 3**	**Initial**	**Amend 1**	**Amend 2**	**Amend 3**
Land PBA numbers				**Land PBA numbers**			
997 733	997 734	997 735	997 736	1 058 384	1 058 385	1 058 386	1 058 387
997 737	997 738	997 739	997 740	1 058 388	1 058 389	1 058 390	1 058 391
997 741	997 742	997 743	997 744	1 058 392	1 058 393	1 058 394	1 058 395
997 745	997 746	997 747	997 748	1 058 396	1 058 397	1 058 398	1 058 399
997 749	997 750	997 751	997 752	1 058 400	1 058 401	1 058 402	1 058 403
Groove PBA numbers				**Groove PBA numbers**			
1 058 706	1 058 707	1 058 708	1 058 709	1 119 357	1 119 358	1 119 359	1 119 360
1 058 710	1 058 711	1 058 712	1 058 713	1 119 361	1 119 362	1 119 363	1 119 364
1 058 714	1 058 715	1 058 716	1 058 717	1 119 365	1 119 366	1 119 367	1 119 368
1 058 718	1 058 719	1 058 720	1 058 721	1 119 369	1 119 370	1 119 371	1 119 372
1 058 722	1 058 723	1 058 724	1 058 725	1 119 373	1 119 374	1 119 375	1 119 376

Table 15 — SDI Sectors by Physical Block Address for Type WORM media

Outer SDI Zone				Inner SDI Zone			
Initial	**Amend 1**	**Amend 2**	**Amend 3**	**Initial**	**Amend 1**	**Amend 2**	**Amend 3**
Land PBA numbers				**Land PBA numbers**			
1 079 671	1 079 672	1 079 673	1 079 674	1 141 747	1 141 748	1 141 749	1 141 750
1 079 675	1 079 676	1 079 677	1 079 678	1 141 751	1 141 752	1 141 753	1 141 754
1 079 679	1 079 680	1 079 681	1 079 682	1 141 755	1 141 756	1 141 757	1 141 758
1 079 683	1 079 684	1 079 685	1 079 686	1 141 759	1 141 760	1 141 761	1 141 762
1 079 687	1 079 688	1 079 689	1 079 690	1 141 763	1 141 764	1 141 765	1 141 766
Groove PBA numbers				**Groove PBA numbers**			
1 142 041	1 142 042	1 142 043	1 142 044	1 204 117	1 204 118	1 204 119	1 204 120
1 142 045	1 142 046	1 142 047	1 142 048	1 204 121	1 204 122	1 204 123	1 204 124
1 142 049	1 142 050	1 142 051	1 142 052	1 204 125	1 204 126	1 204 127	1 204 128
1 142 053	1 142 054	1 142 055	1 142 056	1 204 129	1 204 130	1 204 131	1 204 132
1 142 057	1 142 058	1 142 059	1 142 060	1 204 133	1 204 134	1 204 135	1 204 136

17.4.2 LBA Control Bytes in SDI sectors

SDI sectors shall be recorded with the four LBA Control Bytes (P1) (see 15.10.3) set as follows:

LBA = PBA + (80000000).

SDI sectors are located at fixed PBAs, and shall not be remapped to alternate locations.

17.4.3 Parametric conditions

The media read, write, and erase parameters contained in the SDI Zones shall be determined under the following conditions:

- Environment: Test environment (see 8.1.1).
- Optical beam: As defined in 9.2.
- Disk rotation: As defined in 9.5.

--`,,```,,,,````-`-`,,`,,`,`,,`---

© ISO/IEC 2006 – All rights reserved

Copyright International Organization for Standardization
Provided by IHS under license with ISO
No reproduction or networking permitted without license from IHS
Not for Resale

17.4.4 Specific Disk Information

SDI sectors shall consist of 8 192 bytes that contain Specific Disk Information as defined in Annex K.

17.5 DDS Zones Usage

The two DDS Zones shall be recorded using the thermo-optical Phase Change recording method in the sector format specified in clause 15. The recorded data marks shall satisfy the requirements for signals specified in clause 25.

The media manufacturer shall record both of the DDS Zones during the disk certification process. Both of the DDS Zones shall contain identical information.

For Type RW media, the DDS shall be rewritten by the drive system during a format process.

For Type WORM media, the DDS shall not be written or modified by the drive system after disk format.

17.5.1 DDS Amendment

The DDS Zones shall initially be recorded only in every fourth sector, as shown in table 16 and 17. The media manufacturer may use the three unrecorded sectors between the recorded sectors to allow for amendment of the DDS data. Up to three amendments to the DDS can be made.

The disk drive system shall use the latest amended DDS data, as determined by the sectors that have been written. Table 16 and 17 list the PBAs of the DDS sectors for the initial and amended cases.

Table 16 — DDS Sectors by Physical Block Address for Type RW Media

Outer DDS Zone				Inner DDS Zone			
Initial	**Amend 1**	**Amend 2**	**Amend 3**	**Initial**	**Amend 1**	**Amend 2**	**Amend 3**
Land PBA numbers				**Land PBA numbers**			
997 756	997 757	997 758	997 759	1 058 407	1 058 408	1 058 409	1 058 410
997 760	997 761	997 762	997 763	1 058 411	1 058 412	1 058 413	1 058 414
997 764	997 765	997 766	997 767	1 058 415	1 058 416	1 058 417	1 058 418
997 768	997 769	997 770	997 771	1 058 419	1 058 420	1 058 421	1 058 422
997 772	997 773	997 774	997 775	1 058 423	1 058 424	1 058 425	1 058 426
Groove PBA numbers				**Groove PBA numbers**			
1 058 729	1 058 730	1 058 731	1 058 732	1 119 380	1 119 381	1 119 382	1 119 383
1 058 733	1 058 734	1 058 735	1 058 736	1 119 384	1 119 385	1 119 386	1 119 387
1 058 737	1 058 738	1 058 739	1 058 740	1 119 388	1 119 389	1 119 390	1 119 391
1 058 741	1 058 742	1 058 743	1 058 744	1 119 392	1 119 393	1 119 394	1 119 395
1 058 745	1 058 746	1 058 747	1 058 748	1 119 396	1 119 397	1 119 398	1 119 399

© ISO/IEC 2006 – All rights reserved
Copyright International Organization for Standardization
Provided by IHS under license with ISO
No reproduction or networking permitted without license from IHS
Not for Resale

Table 17 — DDS Sectors by Physical Block Address for Type WORM Media

Outer DDS Zone				Inner DDS Zone			
Initial	**Amend 1**	**Amend 2**	**Amend 3**	**Initial**	**Amend 1**	**Amend 2**	**Amend 3**
Land PBA numbers				**Land PBA numbers**			
1 079 692	1 079 693	1 079 694	1 079 695	1 141 768	1 141 769	1 141 770	1 141 771
1 079 696	1 079 697	1 079 698	1 079 699	1 141 772	1 141 773	1 141 774	1 141 775
1 079 700	1 079 701	1 079 702	1 079 703	1 141 776	1 141 777	1 141 778	1 141 779
1 079 704	1 079 705	1 079 706	1 079 707	1 141 780	1 141 781	1 141 782	1 141 783
1 079 708	1 079 709	1 079 710	1 079 711	1 141 784	1 141 785	1 141 786	1 141 787
Groove PBA numbers				**Groove PBA numbers**			
1 142 062	1 142 063	1 142 064	1 142 065	1 204 138	1 204 139	1 204 140	1 204 141
1 142 066	1 142 067	1 142 068	1 142 069	1 204 142	1 204 143	1 204 144	1 204 145
1 142 070	1 142 071	1 142 072	1 142 073	1 204 146	1 204 147	1 204 148	1 204 149
1 142 074	1 142 075	1 142 076	1 142 077	1 204 150	1 204 151	1 204 152	1 204 153
1 142 078	1 142 079	1 142 080	1 142 081	1 204 154	1 204 155	1 204 156	1 204 157

17.5.2 LBA Control Bytes in DDS sectors

DDS sectors shall be recorded with the four LBA Control Bytes (P1) (see 15.10.3) set as follows:

LBA = PBA + (80000000).

DDS sectors are located at fixed PBAs, and shall not be remapped to alternate locations.

17.5.3 DDS information

The DDS sector shall be recorded with data bytes as specified in 18.5.

18 Layout of the User Zones

18.1 General description of the User Zones

The total data capacity of the User Zones is 15,0 Gbytes per side for both Type RW and Type WORM disks.

The location and size of the User Zones are specified in clause 17.

18.2 Divisions of the User Zones

The User Zones shall be divided into bands as a result of the ZCAV organization of the disk.

There shall be 17 bands numbered 0 to 16 for Type RW media

There shall be 16 bands numbered 0 to 15 for Type WORM media.

Each User Zone is further divided into two groups of contiguous PBA numbers, one group for groove tracks, and one group for land tracks (see tables 18 and 19).

18.3 User Area

The Data fields in the User Area are intended for recording of the user data.

The User Area shall be either:

a Rewritable Zone (Type RW media) intended for writing and rewriting of user data

© ISO/IEC 2006 – All rights reserved

Copyright International Organization for Standardization
Provided by IHS under license with ISO
No reproduction or networking permitted without license from IHS
Not for Resale

or

a Write Once Read Many Zone (Type WORM media) intended for write once recording of user data.

A contiguous block of Land Recording Track sectors of User Zone 7 shall be included in a Defect Management Area (DMA).

The User Area and DMA shall include only the PBA numbers specified in tables 18 and 19.

Sectors in the User Zones that are not specified as part of the User Area or DMA shall not be recorded by media manufacturers or the drive system.

Table 18 — User Area Data Groups and DMA location for Type RW media

Data Group (Band – Land / Groove)	Sectors per Data Group	Start PBA	End PBA
0 – L	55080	12 000	67 079
0 – G	55080	80 880	135 959
1 – L	79 257	137 847	217103
1 – G	79 257	217 278	296 534
2 – L	76 104	296 706	372 809
2 – G	76 104	372 978	449 081
3 – L	73 008	449 247	522 254
3 –G	73 008	522 417	595 424
4 – L	69 914	595 584	665 497
4 – G	69 914	665 654	735 567
5 – L	66 875	735 721	802 595
5 – G	66 875	802 746	869 620
6 – L	63 840	869 768	933 607
6 – G	63 840	933 752	997 591
DMA (L only)	36 800	997 779	1 034 578
7 – L	23 805	1 034 579	1 058 383
7 – G	60 605	1 058 752	1 119 356
8 – L	55 066	1 119 676	1 174 741
8 – G	55 066	1 177 690	1 232 755
9 – L	54 936	1 235 701	1 290 636
9 – G	54 936	1 290 763	1 345 698
10 – L	52 020	1 345 822	1 397 841
10 – G	52 020	1 397 962	1 449 981
11 – L	49 153	1 450 099	1 499 251
11 – G	49 153	1 499 366	1 548 518
12 – L	46 296	1 548 630	1 594 925
12 – G	46 296	1 595 034	1 641 329
13 – L	43 486	1 641 435	1 684 920
13 – G	43 486	1 685 023	1 728 508
14 – L	40 688	1 728 608	1 769 295
14 – G	40 688	1 769 392	1 810 079
15 – L	37 920	1 810 173	1 848 092
15 – G	37 920	1 848 183	1 886 102
16 – L	11 326	1 886 190	1 897 515
16 – G	11 326	1 921 596	1 932 921

Total Number of Sectors in the User Area Data Groups (Excluding DMA) = 1 834 348

--`,,```,,,,````-`-`,,`,,`,`,,`---

© ISO/IEC 2006 – All rights reserved
Copyright International Organization for Standardization
Provided by IHS under license with ISO
No reproduction or networking permitted without license from IHS
Not for Resale

Table 19 — User Area Data Groups and DMA location for Type WORM media

Data Group (Band – Land / Groove)	Sectors per Data Group	Start PBA	End PBA
0 – L	84 784	11200	95 983
0 – G	84 784	108 864	193 647
1 – L	81 729	195 409	277 137
1 –G	81 729	277 300	359 028
2 – L	78 416	359 188	437 603
2 – G	78 416	437 760	516 175
3 – L	75 150	516 329	591 478
3 – G	75 150	591 629	666 778
4 – L	71 880	666 926	738 805
4 – G	71 880	738 950	810 829
5 – L	68 655	810 971	879 625
5 – G	68 655	879 764	948 418
6 – L	65 428	948 554	1 013 981
6 – G	65 428	1 014 114	1 079 541
DMA (L only)	36 750	1 079 713	1 116 462
7 – L	25 284	1 116 463	1 141 746
7 – G	62 034	1 142 083	1 204 116
8 – L	42 200	1 204 408	1 246 607
8 – G	42 200	1 263 588	1 305 787
9 – L	55 917	1 322 765	1 378 681
9 – G	55 917	1 378 796	1 434 712
10 – L	52 776	1 434 824	1 487 599
10 – G	52 776	1 487 708	1 540 483
11 – L	49 674	1 540 589	1 590 262
11 – G	49 674	1 590 365	1 640 038
12 – L	46 576	1 640 138	1 686 713
12 – G	46 576	1 686 810	1 733 385
13 – L	43 515	1 733 479	1 776 993
13 – G	43 515	1 777 084	1 820 598
14 – L	40 474	1 820 686	1 861 159
14 – G	40 474	1 861 244	1 901 717
15 – L	16 380	1 901 799	1 918 178
15 – G	16 302	1 940 539	1 956 840

Total Number of Sectors in the User Area Data Groups (Excluding DMA) = 1 834 348

18.4 Defect Management Area (DMA)

The Defect Management Area (DMA) is used to manage media defects found during media initialization as well as defects found dynamically during user writes.

The DMA shall be divided in the following sub-areas: Primary Defect List 1 (PDL1) Area, Secondary Defect List (SDL) Area, Primary Spares Area (PSA), Secondary Spares Area (SSA), SDL Duplicate Pages (SDLDP) Area, and Primary Defect List 2 (PDL2) Area.

The DMA layout shall be as shown in table 20.

© ISO/IEC 2006 – All rights reserved

Copyright International Organization for Standardization
Provided by IHS under license with ISO
No reproduction or networking permitted without license from IHS
Not for Resale

Each sub-area shall immediately follow the preceding one except for PSA, SSA and SDLDP Areas which shall be preceded by a 1-sector pad.

18.4.1 Primary Defect List (PDL) Area

The PDL Area shall store in the PDL Pages two copies, PDL1, PDL2, of the list of defective sectors found during media certification (see 19.5).

A third copy shall be written in PDL3 (see 17.2.7). The PDL3 Area, which is not part of the DMA, is recorded in a dedicated area located near the inner diameter of Band 7.

The redundant copies shall be used for recovery should any PDL sector become damaged.

The size of PDL1 Area shall be established when it is written and shall be the actual number of sectors used (both good and bad) in writing the PDL. At least 1 sector shall be used for PDL1.

The size of PDL2 Area shall be:

2 · rounded-up (number of Primary Defects / number of entries per PDL Page)

The size of the PDL2 Area accommodates twice the number of PDL Pages required for the Primary Defect List, in the event that some sectors in this area may be defective. If certification is not performed or no defective sectors are found during certification, 1 sector shall be used for PDL2.

18.4.2 Secondary Defect List (SDL) Area

The SDL Area shall store in the SDL Pages the list of defective sectors found during user data writes (see 19.6).

The size of the SDL Area shall be:

2 · rounded-up [(DMA size – PDL1 size – PDL2 size – estimated PSA size – Pad Sectors) / maximum entries per SDL Page)]

The size of the SDL Area accommodates twice the number of SDL Pages required for the number of sectors remaining in the SSA, in the event that some sectors in this area may be defective.

For Type WORM media, a new SDL Page shall be recorded after a group of sectors (by example 250) has been written into the SSA.

The complete Secondary Defect List shall be determined by reading the SDL Area and also scanning the SSA for any sectors which have not yet been recorded into an SDL Page.

18.4.3 SDL Duplicate Pages (SDLDP) Area

The SDL Duplicate Pages (SDLDP) Area shall store a copy of the content of the SDL for recovery in the case of damaged SDL sectors

The SDLDP Area size shall be equal to the SDL Area size.

18.4.4 Primary Spares Area (PSA)

The Primary Spares Area (PSA) shall contain sectors that are slipped due to defects found during media certification.

The PSA size shall be equal to the number of Primary Defects in the User Zones and the PSA. The estimated PSA size shall be defined as the number of sectors required to relocate the Primary Defects in the User Zones.

© ISO/IEC 2006 – All rights reserved
Copyright International Organization for Standardization
Provided by IHS under license with ISO
No reproduction or networking permitted without license from IHS
Not for Resale

The actual PSA size shall be increased by 1 sector for each Primary Defect in the PSA. In the event that there are no Primary Defects in the User Zones, 1 sector shall be used for the PSA.

18.4.5 Secondary Spares Area (SSA)

The Secondary Spares Area (SSA) shall contain sectors automatically relocated during writing.

The SSA Area size shall be equal to the size of the DMA Areas minus the size of all other sub-areas and the pad sectors.

Table 20 — Defect Management Area layout

Location	Contents	Reserved area size
Start PBA (1)	PDL1 (2)	Actual number of sectors used in writing PDL. At least 1 sector shall be used.
	SDL (2)	2 · rounded-up [(DMA size – PDL1 size – PDL2 size – estimated PSA size – 3 Pad Sectors) / maximum entries per SDL Page]
	Pad sector	1 PBA
DMA (Defect Management Area)	PSA (2)	PSA = Number of defective sectors found in bands and PSA during initialization. At least 1 sector is used for the PSA Area.
	Pad sector	1 PBA
	SSA (2)	DMA size – all other sub-areas and pad sectors size within DMA
	Pad sector	1 PBA
End PBA	SDLDP (2)	Same size as SDL
	PDL2 (2)	2 · rounded-up [(number of Primary Defects / Number of entries per PDL Page] At least 1 sector shall be used.

1. This area shall have the indicated dedicated PBA area on the disk. The actual start PBA of valid data for this area however, is indicated in the DDS. The start PBA in this table and the start PBA given in the DDS may be different as an error could occur in writing the first PBA(s) in this area, such that the first PBA(s) are not valid. The DDS structure points to the first valid (“good”) PBA in this area.

2. The actual Start and End PBAs for the sub-areas are recorded in DDS and may differ from the reserved spaces listed above.

18.5 Disk Definition Structure (DDS)

The DDS shall consist of a table with a length of 1 sector. It specifies the location of the Defect Management entities, provides information about the drive that wrote it, and provides information concerning Secondary Defect List (SDL) Page handling. The DDS shall be recorded as specified in 17.5.

Table 21 specifies the format of a DDS sector.

© ISO/IEC 2006 – All rights reserved

Copyright International Organization for Standardization
Provided by IHS under license with ISO
No reproduction or networking permitted without license from IHS
Not for Resale

Table 21 — DDS Sector format

Byte	Contents
0 - 1	DDS Identifier ((A5A5))
2	DDS Format Revision
3 - 10	Vendor Identification (MSB – LSB) (ASCII)
11 - 26	Product Identification (MSB – LSB) (ASCII)
27 - 30	Product Revision Level (MSB – LSB) (ASCII)
31 - 34	Drive Serial Number (MSB – LSB)
35 - 38	Start of PDL1 (MSB - LSB) (PBA)
39 - 42	End of PDL1 (MSB - LSB) (PBA)
43	PDL1 Valid Flag
44 - 59	PDL1 Good Sector Bitmap
60 - 63	Start of SDL (MSB - LSB) (PBA)
64 - 67	End of SDL (MSB – LSB) (PBA)
68 - 69	Maximum entries per SDL Page (MSB - LSB)
70 - 73	Start of Primary Spares (MSB - LSB) (PBA)
74 - 77	End of Primary Spares (MSB – LSB) (PBA)
78 - 81	Start of Secondary Spares (MSB - LSB) (PBA)
82 - 85	End of Secondary Spares (MSB - LSB) (PBA)
86 - 89	Start of SDL Duplicated Pages (MSB - LSB) (PBA)
90 - 93	End of SDL Duplicated Pages (MSB - LSB) (PBA)
94 - 97	Start of PDL2 (MSB – LSB) (PBA)
98 - 101	End of PDL2 (MSB – LSB) (PBA)
102	PDL2 Valid Flag
103 - 118	PDL2 Good Sector Bitmap
119 - 122	Start of PDL3 (MSB - LSB) (PBA)
123 - 126	End of PDL3 (MSB - LSB) (PBA)
127	PDL3 Valid Flag
128 - 143	PDL3 Good Sector Bitmap
144 - 8189	Unspecified
8190 - 8191	DDS Identifier Complement ((5A5A))

The DDS Format Revision, Vendor Identification, Product Identification, Product Revision, and Drive Serial Number fields shall contain implementation specific information that shall be ignored for the purposes of interchange.

The Start of PDL*n* fields shall contain the PBA of the first good block in the corresponding PDL. In the event that the first page of a PDL set cannot be written, (7FFFFFFF) shall be used, as the starting PBA and the Valid Flag shall be set to ZERO.

The End of PDL*n* fields shall contain the PBA of the last good block in the corresponding PDL.

© ISO/IEC 2006 – All rights reserved
Copyright International Organization for Standardization
Provided by IHS under license with ISO
No reproduction or networking permitted without license from IHS
Not for Resale

The PDL*n* Valid Flag fields shall contain a ONE when the corresponding PDL is valid and a ZERO when invalid. All other values for the Valid Flag field are forbidden.

The purpose of the PDL*n* Good Sector Bitmap fields is to provide information useful in determining what sectors in the PDL must be read. The status of each sector in the PDL can be determined by examining the corresponding bit in the bitmap. Good sectors have the bit set, whereas bad sectors do not.

19 Defect Management in the Rewritable (RW) and Write Once Read Many (WORM) Zones

Defective sectors on the disk shall be replaced by good sectors according to the Defect Management scheme described below. Each side of the disk shall be initialized before use. This International Standard allows media initialization with or without certification. A sector Slipping Algorithm handles defective sectors found during certification. A Linear Replacement Algorithm handles defective sectors found after initialization. The total number of sectors on a side of the disk replaced by the sector Slipping Algorithm shall not exceed half the number of DMA sectors. The total number of sectors on a side of the disk replaced by both algorithms shall not exceed the number of DMA sectors.

19.1 Initialization of the disk

During initialization of the disk, the DMA is partitioned and the DDSs and PDLs are recorded prior to the first use of the disk. The User Area is divided into bands, each containing only data sectors. Media initialization can include a certification of the RW bands and the WORM bands, whereby defective sectors are identified and skipped.

For Type WORM media only a single initialization is allowed. Once the DDSs and PDLs are recorded, it indicates that the disk is initialized and no further initialization is permitted. For Type WORM media, all sectors in the WORM bands, the PSA, the SSA, the SDL, and the SDLDP shall be in the blank state at the end of initialization.

For Type RW media, all sectors in the SDL, the SDLDP, and the SSA shall be in the erased state at the end of initialization.

All DDS parameters shall be recorded in all of the DDS sectors as specified in 17.5. The PDLs shall be recorded in the areas defined in 18.4. The contents of the PDLs and SDLs shall be as shown in tables 23 and 24 (see 19.5 and 19.6).

19.2 Certification

If the disk is certified, the certification shall at a minimum be applied to all sectors of the RW and WORM bands in the User Area. This International Standard does not state the method of certification. It may involve, erasing, writing, and reading of sectors. The Slipping Algorithm (see 19.2.1) shall handle defective sectors found during certification. Defective sectors shall not be used for reading or writing in the User Area. Guidelines for replacing defective sectors are given in Annex Z.

19.2.1 Slipping Algorithm

The Slipping Algorithm shall be applied across each band of the disk if certification is performed.

For PBAs less than the start PBA of the DMA, defective data sectors found during certification shall be replaced by the first good sector following the defective sector within the current band, thus causing a slip of one sector towards the DMA. In the case where a sector slips out of a band, with the exception of the last band before the DMA, the replacement sector shall be the first sector of the next band, and so causes a slip of one sector towards the DMA. Sectors slipping out of the band immediately before the DMA are slipped into the PSA. The slip count will increase as the PBA increases.

--`,,```,,,,````-`-`,,`,,`,`,,`---
© ISO/IEC 2006 – All rights reserved
Copyright International Organization for Standardization
Provided by IHS under license with ISO
No reproduction or networking permitted without license from IHS
Not for Resale

For PBAs higher than the start PBA of the DMA, defective data sectors found during certification shall be replaced by the first good sector preceding the defective sector within the current band, thus causing a slip of one sector towards the DMA. In the case where a sector slips out of the beginning of a band, with the exception of the first band after the DMA, the replacement sector shall be the last sector of the preceding band, and so causes a slip of one sector towards the DMA. Sectors slipping out of the band immediately after the DMA are slipped into the PSA from the tail end. The slip count will increase as the PBA decreases.

Table 22 shows a simplified example of the Slipping Algorithm for a greatly shortened PBA range over several bands including the DMA and PSA.

Table 22 — Sector Slipping Algorithm example

	Band 0			**Band 1**			**DMA – PSA**				**Band 2**			**Band 3**		
PBA	0	1	2	10	11	12	20	21	22	23	30	31	32	40	41	42
LBA	0		1	2	3		4	5	6	7	8	9		10		11
Bad		X				X							X		X	

The address of each defective sector shall be written in the PDLs. If no defective sectors are found during certification, an empty PDL shall be recorded. As the PSA grows, the SSA is diminished accordingly. All replacements performed using the Slipping Algorithm are done without regard for land or groove.

19.2.2 Linear Replacement Algorithm

The Linear Replacement Algorithm is used to handle defective sectors found after certification.

The defective sector shall be replaced by the first available sector in the SSA.

As with the Slipping Algorithm, replacement shall be done without regard for land or groove.

If a replacement sector is found to be defective, it shall be replaced by the next available spare sector. The next available spare sector does not have to be the next PBA. The address of the defective sector shall be recorded in the SDL in the appropriate position so that the replacement sector PBA can be calculated from the entry position and the “First Spare in this Page” field in the SDL Page.

The addresses of sectors already recorded in the PDL shall not be recorded in the SDL.

If a replacement sector listed in the SDL is later found to be defective, it shall be dealt with by making a new entry in the SDL indicating a replacement sector for the defective replacement sector.

19.3 Disk not certified

The Linear Replacement Algorithm is used to handle sectors found defective on disks, which have not been certified.

The defective sector shall be replaced by the first available sector in the SSA.

If a replacement sector is found to be defective, it shall be replaced by the next available spare sector. The next available spare sector does not have to be the next PBA. The address of the defective sector shall be recorded in the SDL in the appropriate position so that the replacement sector PBA can be calculated from the entry position and the “First Spare in this Page” field in the SDL Page.

If a replacement sector listed in the SDL is later found to be defective, it shall be dealt with by making a new entry in the SDL indicating a replacement sector for the defective replacement sector.

© ISO/IEC 2006 – All rights reserved
Copyright International Organization for Standardization
Provided by IHS under license with ISO
No reproduction or networking permitted without license from IHS
Not for Resale

19.4 Write procedure

When writing data in the sectors of a band, all defective sectors listed in the PDL shall be skipped and the data shall be recorded in the appropriate sector in accordance with the Slipping Algorithm. If a sector to be written is listed in the SDL, the data shall be written in the spare sector pointed to by the SDL, according to the Linear Replacement Algorithm. When writing in the PSA, all defective sectors listed in the PDL shall be skipped and the data shall be relocated using the Slipping Algorithm. When writing the DDS, PDL, SDL, and in the SSA, all defective sectors listed in the PDL shall be skipped and written in the next available sector in the affected area.

For Type WORM after initialization, all sectors in the User Area shall be in the blank state. Erasing of sectors on Type WORM media is not permitted. If the sector has been written, a write operation is not permitted. During write operations, sectors shall always be recorded with CRC, ECC, and Control Record information as specified by this International Standard. See Annex AA for guidelines for the use of Type WORM media.

19.5 Primary Defect List (PDL) format and content

The PDL shall consist of bytes specifying

- the format revision of the PDL,
- information about the drive type that wrote the PDL,
- a PDL Page sequence number,
- the number of entries in the entire PDL,
- the PBAs of the defective sectors, identified at initialization, in ascending order,
- a vendor unique defect code for each defective sector,
- the drive serial number of the drive that found each defective sector.

Table 23 shows the PDL byte layout. All remaining defect entries in the last page of the PDL shall have the PBA set to (7FFFFFFF), the Defect Cause set to (FF), and the Drive Serial Number set to (FFFFFF). If no defective sectors are detected, the Number of Defective Sectors field shall be set to ZERO.

During initialization, a PDL shall be recorded; this PDL may be empty.

Table 23 — Primary Defect List Page format

Byte	Contents
0 - 1	PDL Identifier ((0001))
2	PDL Page Format Revision
3 - 10	Vendor Identification (MSB – LSB) (ASCII)
11 - 26	Product Identification (MSB – LSB) (ASCII)
27 - 30	Product Revision Level (MSB – LSB) (ASCII)
31 - 34	Drive Serial Number (MSB – LSB)
35 - 36	PDL Page Number (MSB – LSB)
37 - 40	Number of Defective Sectors (MSB – LSB)
41 - 189	Unspecified
190 - 193	1st Defective Sector (MSB – LSB) (PBA)
194	1st Defective Sector Defect Cause
195 - 197	1st Defective Sector Drive Serial Number (MSB – LSB)
.....	.....

--`,,```,,,,````-`-`,,`,,`,`,,`---

© ISO/IEC 2006 – All rights reserved
Copyright International Organization for Standardization
Provided by IHS under license with ISO
No reproduction or networking permitted without license from IHS
Not for Resale

8182 - 8185	1000th Defective Sector (MSB - LSB) (PBA)
8186	1000th Defective Sector Defect Cause
8187 - 8189	1000th Defective Sector Drive Serial Number (MSB – LSB)
8190 - 8191	PDL Identifier Complement ((FFFE))

The PDL Format Revision, Vendor Identification, Product Identification, Product Revision, and Drive Serial Number fields shall contain implementation specific information that shall be ignored for the purposes of interchange. The PDL Format Revision is used to specify the format of the unspecified bytes in the PDL Page.

When writing a PDL Page, the control record LBA shall be set to the PBA + (80000000).

19.6 Secondary Defect List (SDL) format and content

The SDL is used to record the addresses of data and spare sectors, which have become defective after initialization and those of their respective replacements. The SDL shall consist of bytes specifying

- the format revision of the SDL Page,
- information about the drive type that wrote the SDL Page,
- a SDL Page sequence number,
- the number of entries in the SDL Page,
- the PBAs of the first sector in the SSA that is covered by the SDL Page,
- the PBA of each defective sector,
- a vendor unique defect code for each defective sector,
- the drive serial number of the drive that found each defective sector,
- the PBA of the first write attempt to the Page,
- the count of the number of times the Page has been updated (set to ZERO for Type WORM media).

Table 24 shows the PDL byte layout. All unused defect entries in an SDL Page shall have the PBA set to (7FFFFFFF), the Defect Cause set to (FF), and the Drive Serial Number set to (FFFFFF). Defective SSA sectors shall be recorded in the SDL Page in the same manner as unused sectors.

Table 24 — Secondary Defect List Page format

Byte	Contents
0 - 1	SDL Identifier ((0002))
2	SDL Page Format Revision
3 - 10	Vendor Identification (MSB – LSB) (ASCII)
11 - 26	Product Identification (MSB – LSB) (ASCII)
27 - 30	Product Revision Level (MSB – LSB) (ASCII)
31 - 34	Drive Serial Number (MSB – LSB)
35 - 36	SDL Page Number (MSB – LSB)
37 - 38	Number of PBAs in this Page (MSB – LSB)
39 - 42	First Spare in this Page (MSB – LSB) (PBA)
43 - 46	Page Origin PBA
47 - 48	Page Update Count
49 - 189	Unspecified
190 - 193	1st Defective Sector (MSB – LSB) (PBA)
194	1st Defective Sector Defect Cause
195 - 197	1st Defective Sector Drive Serial Number (MSB – LSB)
.....	.....

© ISO/IEC 2006 – All rights reserved
Copyright International Organization for Standardization
Provided by IHS under license with ISO
No reproduction or networking permitted without license from IHS
Not for Resale

8182 - 8185	1000th Defective Sector (MSB - LSB) (PBA)
8186	1000th Defective Sector Defect Cause
8187 - 8189	1000th Defective Sector Drive Serial Number (MSB – LSB)
8190 - 8191	SDL Identifier Complement ((FFFD))

The SDL Format Revision, Vendor Identification, Product Identification, Product Revision, and Drive Serial Number fields shall contain implementation specific information that is ignored for the purposes of interchange. The SDL Format Revision is used to specify the format of the unspecified bytes in the SDL Page.

SDL Pages shall be generated in ascending order by the contents of the First Spare in this Page field. Entries in a given SDL Page shall be in ascending order by replacement PBA. The replacement PBA for a given defective PBA is computed by determining which defect entry contains the defective PBA and taking the index, starting at zero, of that entry and adding it to the contents of the First Spare in this Page field.

Each SDL Page shall contain space for 1 000 defect entries, however the Maximum Entries Per SDL Page field in the DDS dictates the maximum number that may be used. This number may be different for media Type WORM and Type RW. On Type WORM Media, an SDL Page shall only be written when the number of defect entries is equal to the maximum specified in the DDS.

The SDLDP Area shall contain a copy of each completed SDL Page.

When writing an SDL Page, the control record LBA shall be set to the PBA + (80000000).

Section 4 — Characteristics of embossed information

20 Embossed information – Method of testing

The format of the embossed information on the disk is defined in clauses 13 to 17. Clauses 21 and 22 specify the requirements for the signals from the grooves and Preformatted Headers, as obtained when using the Reference Drive specified in clause 9.

20.1 Environment

All signals specified in clauses 21 and 22 shall be within their specified ranges with the cartridge in any environment in the range of allowed operating environments defined in 8.1.2.

20.2 Use of the Reference Drive

All signals specified in clauses 21 and 22 shall be measured in the indicated channels of the Reference Drive. The drive shall have the following characteristics for the purpose of these tests.

20.2.1 Optics and mechanics

The focused optical beam shall have the properties defined in 9.2. The disk shall rotate as specified in 9.5.

20.2.2 Read power

The read power shall be 500 μW ± 25 μW.

20.2.3 Read Channel

The drive shall have a Read Channel, with the implementation as given in 9.3.

© ISO/IEC 2006 – All rights reserved
Copyright International Organization for Standardization
Provided by IHS under license with ISO
No reproduction or networking permitted without license from IHS
Not for Resale

20.2.4 Tracking

During the measurement of the signals, the focus of the optical beam shall have an axial deviation of not more than

e_{max} (axial) = 0,3 µm

from the recording layer, and it shall have a radial deviation of not more than

e_{max} (radial) = 0,04 µm

from the centre of a Groove or a Land Recording Track.

20.2.5 Axial focus offset optimization

The axial focus offset shall be adjusted to maximize the peak-to-peak amplitude of the 4T mark and 4T space pattern from the AM fields as measured in the Read Channel. This axial focus offset adjustment shall be used during the measurement of all embossed signals.

20.3 Definition of signals

Figure 27 shows the signals specified in clauses 21 and 22.

All signals are linearly related to currents through a split photodiode detector, and are therefore linearly related to the optical power falling on the detector.

Two signals I_1 and I_2 are derived from the outputs of the split photodiode detector H of the Reference Drive (see 9.1).

The read signal I provided by the Read Channel is the high bandwidth sum signal

$I = (I_1 + I_2)$

as processed by the low-pass filter described in Annex L.

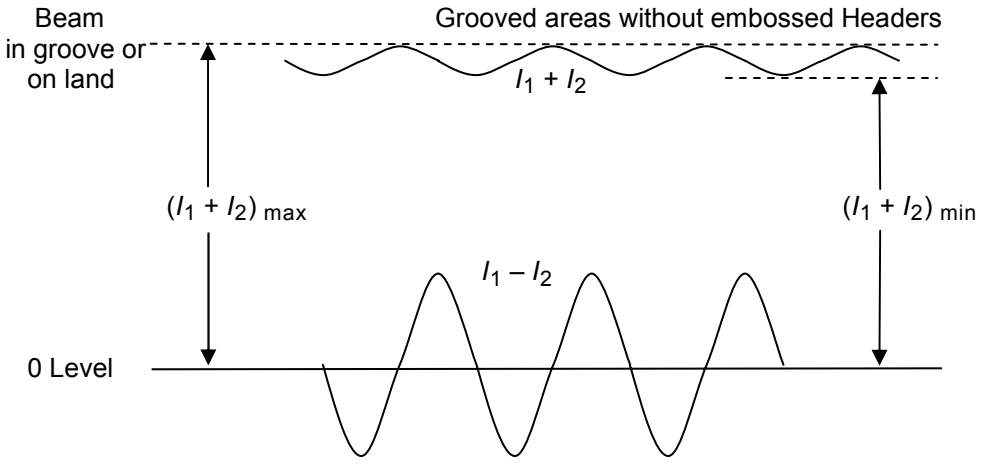

Figure 27a — Signals from grooves and lands in the Radial Tracking Channel

© ISO/IEC 2006 – All rights reserved
Copyright International Organization for Standardization
Provided by IHS under license with ISO
No reproduction or networking permitted without license from IHS
Not for Resale

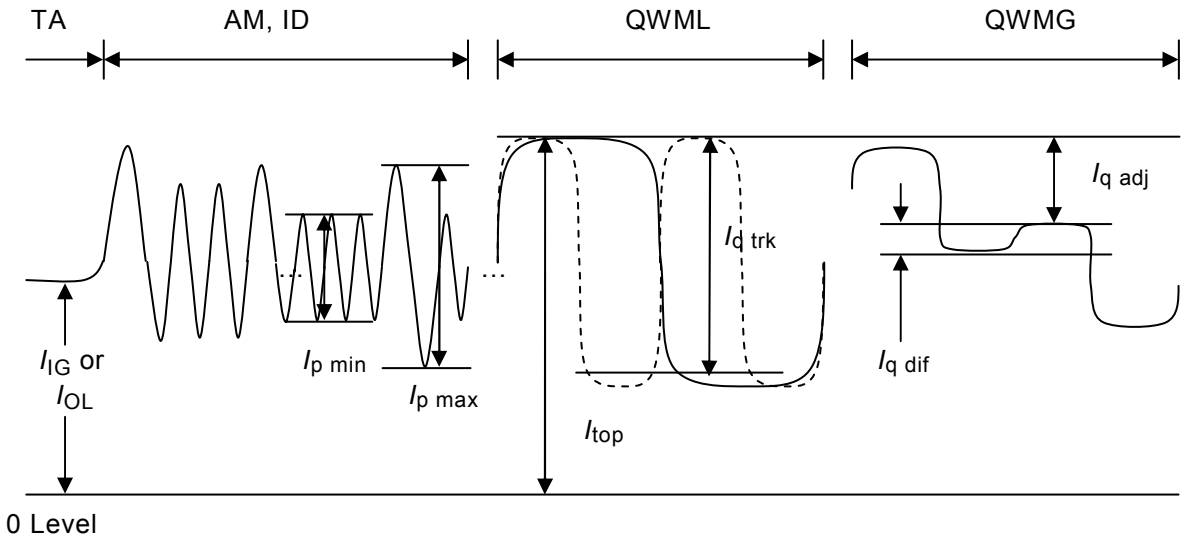

Figure 27b — Signals from Headers in the Read Channel

Figure 27 — Illustration of the various parameters for embossed signal characteristics

21 Signals from grooves and lands

The sum signal ($I_1 + I_2$) and difference signal ($I_1 - I_2$) considered in this clause (see figure 27a) shall be filtered using a 5th order Bessel filter with a cut-off frequency of 1,0 MHz such that frequencies above the cut-off are attenuated, thereby eliminating the effect of modulation due to embossed Headers.

21.1 Ratio of groove to land signal

The on-track signal in groove I_{IG} or on land I_{OL} is the sum signal ($I_1 + I_2$) in the Read Channel when the light beam is following a groove or a land in the Formatted Zone. The on-track signals shall meet the following requirement:

In the case of type WORM Media

$$1,0 \leq \frac{I_{IG}}{I_{OL}} \leq 1,25$$

In the case of type RW media

$$0,85 \leq \frac{I_{IG}}{I_{OL}} \leq 1,15$$

when measured in unrecorded areas.

21.2 Ratio of groove/land to Mirror Area signal

The on-track signals shall also meet the following requirements:

In the case of type WORM Media

© ISO/IEC 2006 – All rights reserved

Copyright International Organization for Standardization
Provided by IHS under license with ISO
No reproduction or networking permitted without license from IHS
Not for Resale

$$0,60 \leq \frac{I_{IG}}{I_{MA}} \leq 0,90$$

$$0,60 \leq \frac{I_{OL}}{I_{MA}} \leq 0,90$$

In the case of type RW media

$$0,70 \leq \frac{I_{IG}}{I_{MA}} \leq 1,0$$

$$0,70 \leq \frac{I_{OL}}{I_{MA}} \leq 1,0$$

where I_{IG} and I_{OL} are measured in an unrecorded area, and I_{MA} is the sum signal measured in a Mirror Area.

21.3 Divided push-pull signal

The divided push-pull signal is the peak-to-peak amplitude derived from the instantaneous level of the differential output (I_1 - I_2) divided by the instantaneous level of the sum output (I_1 + I_2) when the focused light beam crosses unrecorded fields of grooved tracks.

The radial tracking servo shall be operating in an open-loop mode during this measurement.

The divided push-pull signal shall meet the following requirement:

$$0,70 \leq \left[\frac{(I_1 - I_2)}{(I_1 + I_2)} \right]_{PP} \leq 1,40$$

21.4 Wobble signal

The wobble signal is the signal generated by the square wave shaped displacement of the groove as measured in the Tracking Channel when the focus of the beam is following a groove or a land in the unwritten recording fields of the Formatted Zone as specified in 20.2.4.

The wobble signal shall satisfy the three following requirements:

$$0,05 \leq \frac{\text{Wobble}_{PP}}{(I_1 - I_2)_{PP}} \leq 0,10$$

where Wobble $_{PP}$ is the wobble signal peak-to-peak amplitude for both the groove and land tracks, and $(I_1 - I_2)_{PP}$ is the push pull signal peak-to-peak amplitude when the light beam crosses tracks in unwritten recording fields.

In the case of type WORM media

NBSNR ≥ 35 dB (in a 10 kHz bandwidth)

In the case of type RW media

NBSNR ≥ 34 dB (in a 10 kHz bandwidth)

© ISO/IEC 2006 – All rights reserved
Copyright International Organization for Standardization
Provided by IHS under license with ISO
No reproduction or networking permitted without license from IHS
Not for Resale

where NBSNR is the Narrow-Band Signal-to-Noise Ratio of the wobble signal for both groove and land unwritten and written tracks.

$$\frac{A(2F_0)}{A(F_0)} \leq -30 \text{ dB}$$

where $A(2F_0)$ and $A(F_0)$ are respectively the amplitudes of the second harmonic $2F_0$ and the fundamental frequency F_0 of the wobble, measured in a resolution bandwidth of 10 KHz.

21.5 Phase depth

The phase depth of the grooves equals

$$\frac{n \times d}{\lambda} \times 360°$$

where n is the index of refraction of the cover layer, d is the groove depth, and λ is the wavelength of the laser. The phase depth shall be less than 90°.

21.6 Track location

The Recording Track centres shall be located using the Quadrature Wobble Marks for both groove and land tracks (see 15.4 and Annex X).

22 Signals from Headers

The signal obtained from the embossed Headers (see figure 27b) shall be measured in the Read Channel of the Reference Drive and processed with the low-pass filter described in Annex L.

22.1 Reference reflectance I_{top}

The reference reflectance signal I_{top}, corresponding to the peak level of the on-track Quadrature Wobble Mark, shall meet the following requirement:

In the case of type WORM Media

$$0{,}70 \leq \frac{I_{top}}{I_{MA}}$$

In the case of type RW Media

$$0{,}80 \leq \frac{I_{top}}{I_{MA}}$$

22.2 Address Mark and ID signals

The signal I_p from the marks in the Address Mark and ID fields shall meet the requirements:

In the case of type WORM media

--`,,```,,,,````-`-`,,`,,`,`,,`---

© ISO/IEC 2006 – All rights reserved

Copyright International Organization for Standardization
Provided by IHS under license with ISO
No reproduction or networking permitted without license from IHS
Not for Resale

$$0,30 \leq \frac{I_{p\,max}}{I_{top}} \leq 0,60$$

$$\frac{I_{p\,min}}{I_{p\,max}} \geq 0,40$$

In the case of type RW media

$$0,20 \leq \frac{I_{p\,max}}{I_{top}} \leq 0,60$$

$$\frac{I_{p\,min}}{I_{p\,max}} \geq 0,30$$

where $I_{p\,min}$ and $I_{p\,max}$ are the signals with the minimum and maximum amplitude in the AM and ID fields. The second requirement shall apply over any Header.

22.3 QWM signals

The signal $I_{q\,trk}$ is the read signal from the QWM field positioned in line with the Recording Track. $I_{q\,trk}$ is associated with the QWMG field when tracking in the groove or the QWML field when tracking on the land.

The signal $I_{q\,trk}$ shall meet the following requirement:

In the case of type WORM media

$$0,30 \leq \frac{I_{q\,trk}}{I_{top}} \leq 0,70$$

In the case of type RW media

$$0,12 \leq \frac{I_{q\,trk}}{I_{top}} \leq 0,30$$

The signal $I_{q\,adj}$ is from the QWM (A and B sub-fields) of the two adjacent Recording Tracks. $I_{q\,adj}$ is associated with the QWML field when tracking in the groove or the QWMG field when tracking on the land.

The signal $I_{q\,adj}$ shall meet the following requirement:

In the case of type WORM media

$$\frac{I_{q\,adj}}{I_{q\,trk}} \geq 0,15$$

In the case of type RW media

$$\frac{I_{q\,adj}}{I_{q\,trk}} \geq 0,10$$

© ISO/IEC 2006 – All rights reserved
Copyright International Organization for Standardization
Provided by IHS under license with ISO
No reproduction or networking permitted without license from IHS
Not for Resale

The signal $I_{q\ dif}$ is the difference in amplitude from the QWM (A and B sub-fields) of the two adjacent Recording Tracks. $I_{q\ dif}$ is associated with the QWML field when tracking on the groove or the QWMG field when tracking on the land.

The signal $I_{q\ dif}$ shall meet the following requirement:

$$\frac{|\ I_{q\ dif}\ |}{I_{q\ adj}} \leq 0{,}10$$

This requirement applies to any Header under the condition that the tracking offset has been adjusted so that average value of $I_{q\ dif}$ is equal to zero for the Recording Track.

22.4 Timing mean and jitter

The Header signal shall be read and detected using the Read Channel circuit defined in Annex L under the conditions specified in 20.2. The timing mean Mt(H) and timing jitter Jt(H) shall be measured according to the procedure in Annex M and shall meet the following requirement:

$$|\ \mathrm{Mt(H)} - n\mathrm{T}\ | + 5\ \mathrm{Jt(H)} \leq 1{,}0\ \mathrm{T}$$

where T is the Channel clock period, Mt(H) is the mean (average), and Jt(H) is the standard deviation (sigma) of the separately measured time intervals of leading-to-trailing and trailing-to-leading edges of the read signal. The ideal time interval corresponds to *n*T.

Mt(H) and Jt(H*)* are illustrated in figure M.1 of Annex M.

All the time interval samples detected from the Header signals shall satisfy the condition of Mt(H) and Jt(H).

Section 5 — Characteristics of the recording layer

23 Method of testing

Clauses 24 to 26 describe a series of tests to assess the thermal-optical properties of the recording layer, as used for writing, rewriting, and erasing data. The tests shall be performed only in the Data field of the sectors. The write, rewrite, read, and erase operations necessary for the tests shall be made on the same Reference Drive.

Clauses 24 to 26 specify only the average quality of the recording layer. Local deviations from the specified values, called defects, can cause write or erase problems. These defects are covered in section 6.

23.1 Environment

All signals in clauses 24 to 26 shall be within their specified ranges with the cartridge in any environment in the range of allowed operating environments defined in 8.1.2 except where otherwise noted.

23.2 Reference Drive

The write, rewrite, and erase tests described in clauses 24 to 26 shall be measured in the Read Channel of the Reference Drive. The drive shall have the following characteristics for the purpose of these tests.

--`,,```,,,,````-`-`,,`,,`,`,,`---

© ISO/IEC 2006 – All rights reserved

Copyright International Organization for Standardization
Provided by IHS under license with ISO
No reproduction or networking permitted without license from IHS
Not for Resale

23.2.1 Optics and mechanics

The focused optical beam shall have the properties defined in 9.2. The disk shall rotate as specified in 9.5.

23.2.2 Read power

The read power shall be 500 µW ± 25 µW.

23.2.3 Read Channel

The Reference Drive shall have a Read Channel that can detect the Phase Change marks in the recording layer. This Channel shall have an implementation equivalent to that given in 9.3.

The edge positions in time shall be measured for testing purposes by a threshold detection method. The threshold value is referenced to the centre of the peak-to-peak envelope of the read signal. The positive peak and negative peak signals of the envelope circuit (see Annex N) shall each contain a single pole filter with a –3 dB rolloff point at 50 kHz.

23.2.4 Tracking

During the measurement of the signals, the focus of the optical beam shall have an axial deviation of not more than

e_{max} (axial) = 0,3 µm

from the recording layer, and it shall have a radial deviation of not more than

e_{max} (radial) = 0,04 µm

from the centre of a Groove or a Land Recording Track.

23.2.5 Signal detection for testing purposes

The signal from the Read Channel is not equalized before detection. The signal shall be rolled off with a 5th order Bessel low-pass filter with a cut-off frequency of half the Channel clock frequency of the band being tested (see Annex L).

Nominally, the threshold value will be constant if the laser power calibration is perfect and there are no parameter variations. However, in some measurements the threshold value may have to be adjusted to minimize the effects of mark size changes due to parameter variations during writing.

23.3 Write conditions

23.3.1 Write pulse and power waveform

For Type RW and Type WORM media, marks are recorded on the disk by pulses of optical power (see Annex O) at the test rotational frequency. The pulse shape for the purpose of testing shall be nominally rectangular. The rise and fall times (10 % to 90 % or 90 % to 10 %) shall be less than 1,0 ns between any two sequential power levels.

The measurement of laser power shall be done in pulsed operation by averaging. For example, use one pulse every 20 ns with a fixed duty cycle while measuring with a spherical radiometer. The averaging method of measuring the laser power will minimize the accumulation of pulse width and pulse amplitude tolerances. Pulsed operation also enables evaluation of higher laser powers than allowed by the continuous power rating of the laser (see also Annex CC).

© ISO/IEC 2006 – All rights reserved
Copyright International Organization for Standardization
Provided by IHS under license with ISO
No reproduction or networking permitted without license from IHS
Not for Resale

The values of P_{FW}, P_{MP}, P_{LW}, P_{ER}, P_{CL}, and P_B used in any media tests shall be the ones recorded in the SDI sectors for that particular piece of media (see 17.4.4). Values of laser power levels (or ratio of powers) required for groove or land recording in each band shall be recorded in the SDI sectors. The values of pulse timing parameters T_{SFP}, T_{EFP}, T_{X1}, T_{X3}, T_{SMP}, T_{X2}, T_{EMP}, T_{EMPP}, T_{SLP}, T_{ELP}, T_{ECP}, with the required adaptive timing adjustments corresponding to the previous mark or space lengths (see table K.2 of Annex K) shall also be recorded in the SDI sectors.

The write pulse power and pulse widths are determined using the method in 23.3.4.

Mark and space lengths of 2T to 9T shall be used in all media tests to evaluate the recording laser power levels and write pulse timing.

23.3.2 Write pulse power

The media manufacturer shall determine the value of the pulse power levels P_{FW}, P_{MP}, P_{LW}, P_{ER}, P_{CL}, and P_B that are recorded in the SDI sectors.

The nominal write first pulse power level P_{FW} for groove or land recording in each band at the test rotational speed shall be recorded in the SDI sectors. The remaining power levels are specified as a ratio to the write first pulse level P_{FW} for groove or land recording for each band.

The average power during writing for any disk at any radius shall not exceed 3,75 mW as measured over a 10 µs time interval.

The maximum pulse power level used for recording on any disk at any radius shall not exceed 8,0 mW.

23.3.3 Write pulse timing

The media manufacturer shall determine the value of the pulse timing parameters T_{SFP}, T_{EFP}, T_{X1}, T_{X3}, T_{SMP}, T_{X2}, T_{EMP}, T_{EMPP}, T_{SLP}, T_{ELP}, T_{ECP}, and the required adaptive timing adjustments corresponding to the previous mark or space lengths that are recorded in the SDI sectors.

The write pulse timing parameters for each band at the test rotational speed shall be recorded in the SDI sectors.

23.3.4 Write pulse power and pulse timing determination

The media manufacturer shall determine the value of the write pulse power levels and pulse timing parameters using the following method:

- Write several Groove and Land Recording Tracks with the test patterns described in Annex N. The recordings shall be done at a media temperature of 25 °C ± 2 °C and at the test rotational frequency.

- Read and detect the readback signal with the detection method given in Annex L. Adjust focus for maximum readback signal using the 3T mark and 3T space pattern of VFO1 and set the threshold at 50 % of the peak-to-peak signal amplitude for this test.

- Measure the time intervals between edges using a TIA as described in Annex M. Adjust the write pulse power levels and pulse timing parameters to minimize the timing mean Mt and timing jitter Jt for each mark and space length from 2T to 9T.

- Adjusting the pulse power levels and pulse timing parameters is a multi-variable iterative process. The media manufacturer may use any optimization algorithm that minimizes both Mt and Jt, within the optical power constraints of 23.3.2 and 23.4.

- The process shall be repeated for Groove and Land Recording Tracks in each band on the disk.

© ISO/IEC 2006 – All rights reserved

Copyright International Organization for Standardization
Provided by IHS under license with ISO
No reproduction or networking permitted without license from IHS
Not for Resale

The write parameters recorded in the SDI sectors shall generate written data that complies with the requirements of clause 25 for Groove and Land Recording Tracks in all bands.

23.4 Erase power for Type RW media

For Type RW media, marks can be erased from the disk by a constant optical power. The erase optical power P_{ER} is also used between write pulses for direct overwriting of the recording field. The erase power is the optical power required for any given track at the entrance surface to erase or direct overwrite marks written according to 23.3.

The ratio of erase power level P_{ER} to the write first pulse level P_{FW} for groove or land recording is recorded in the SDI sectors for each band at the test rotational speed (see 17.4.4).

The erase power for any disk at any radius shall not exceed 3,75 mW.

23.5 Read power damage

Recorded data shall not become damaged due to the repetitive reading of sectors. Media shall be tested against read power damage for Groove and Land Recording Tracks in the innermost band at the test rotational speed. Media shall be tested for read power damage as follows:

- Several sectors shall be written on the Groove and Land Recording Tracks of the innermost band according to 23.3. Sectors shall be selected which are verified as correctable with less than 10 byte errors per sector using the ECC as defined in Annex H.

- The read power shall then be increased to 600 µW ± 25 µW. The disk shall make 1 000 000 revolutions while remaining on a single Recording Track which contains the selected sectors.

- After all test revolutions have completed, the read power shall be returned to the nominal power level. All selected sectors shall be verified as correctable with less than 100 byte errors per sector.

- This test shall be preformed for both Groove and Land Recording Tracks.

24 Phase Change characteristics

24.1 Mark polarity

The Phase Change marks shall be either more or less reflective than spaces.

The polarity of Phase Change marks shall be specified by the manufacturer in byte 40 of the SDI sectors (see 17.4.4).

24.2 Rewrite cycles for Type RW media

The number of rewrite cycles for Type RW media is not specified by this International Standard.

25 Write characteristics

25.1 Resolution

I_L is the peak-to-peak value of the signal obtained in the Read Channel from 9T marks and 9T spaces (see figure 29) written under any of the conditions given in 23.3, and read under the conditions specified in 23.2. A 9T is the longest interval allowed in the recording field of a sector.

© ISO/IEC 2006 – All rights reserved
Copyright International Organization for Standardization
Provided by IHS under license with ISO
No reproduction or networking permitted without license from IHS
Not for Resale

I_H is the peak-to-peak value of the signal obtained in the Read Channel from 2T marks and 2T spaces (see figure 28) written under any of the conditions given in 23.3, and read under the conditions specified in 23.2. A 2T is the shortest interval allowed by the RLL(1,7) code in the recording field of a sector.

The resolution I_H / I_L shall not be less than 0,10 within any sector.

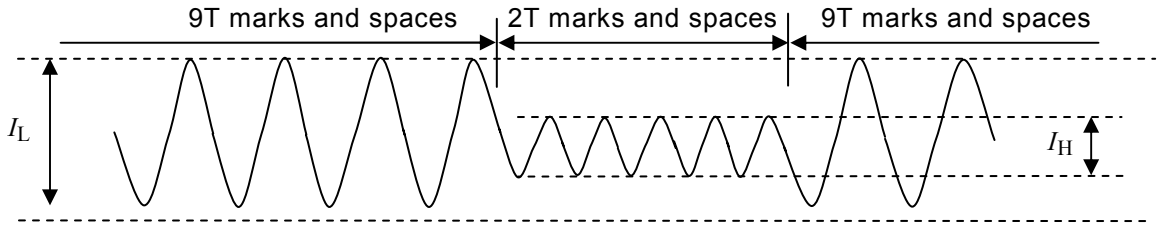

Figure 28 — Definition of I_L and I_H for resolution measurement

25.2 Narrow-Band Signal-to-Noise Ratio (NBSNR)

The Narrow-Band Signal-to-Noise Ratio NBSNR is the ratio of the signal level to the noise level of a specified pattern, measured in a 30 kHz bandwidth. It shall be determined as follows.

- Write a series of 2T marks followed by 2T spaces in the Data field of a series of sectors at a frequency f_0 of the highest frequency allowed by the RLL(1,7) code for each zone. The write conditions shall be as specified in 23.3.

- Read the recording fields with the Read Channel under the conditions specified in 23.2 using a spectrum analyzer with bandwidth of 30 kHz. Measure the amplitudes of the signal and noise at frequency f_0 indicated in figure 29. The measurements shall be corrected for the effect of the Header fields and for any instrumentation error in order to obtain the Data field only.

The Narrow-Band Signal-to-Noise Ratio shall be

$$\text{NBSNR} = 20 \log_{10} \frac{\text{Signal level}}{\text{Noise level}}$$

The NBSNR shall be greater than 43 dB for all sectors in the RW or 40 dB for all sectors in the WORM zones using the optical system as defined in 9.1.

--`,,```,,,,````-`-`,,`,,`,`,,`---
© ISO/IEC 2006 – All rights reserved
Copyright International Organization for Standardization
Provided by IHS under license with ISO
No reproduction or networking permitted without license from IHS
Not for Resale

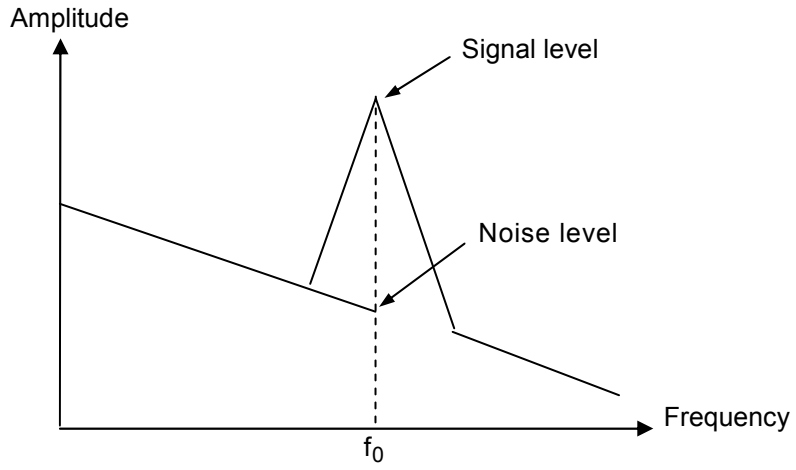

Figure 29 — Amplitude versus frequency for the Phase Change signal

25.3 Cross-talk ratio

The cross-talk from *n*T marks and spaces shall be measured as follow:

- Write a series of *n*T marks followed by *n*T spaces in the Data field of the sectors on Recording Track *n* at the frequency specified for each band in the Formatted Zone. The write conditions shall be as specified in 23.3.

- Read the recording fields of the sectors in Recording Track *n*-1, *n*, and *n*+1 under the conditions specified in 23.2.

The cross-talk from track *n* to *n*-1 and from track *n* to *n*+1 for 2T marks and 2T spaces and 9T marks and 9T spaces measured as the ratio in dB of the read signal of these tracks shall be lower than – 26 dB for type RW media and –23 dB for type WORM media.

25.4 Timing mean

The timing mean Mt*(n*T*)* of *n*T marks and spaces is defined as the mean (average) of the separately measured time intervals of leading-to-trailing and trailing-to-leading edges of the read signal.

The ideal time interval is *n*T where T is the Channel clock period.

The data shall be written in accordance with 23.3 and the procedures described in Annex N.

The signal shall be read and detected using the Read Channel circuit defined in Annex L under the conditions specified in 23.2. The timing mean Mt shall be measured according to the procedure in Annex M.

25.4.1 Timing mean for 2T marks and spaces

The timing mean for 2T marks and spaces shall meet the following requirement in the Formatted Zone:

$$-0{,}20\ T \leq Mt(2T) - 2T \leq +0{,}20\ T$$

25.4.2 Timing mean for *n* = 3T to 9T, marks and spaces

The timing mean for *n* = 3T to 9T, marks and spaces shall meet the following requirement in the Formatted Zone:

$$-0{,}15\ T \leq Mt(nT) - nT \leq +0{,}15\ T$$

© ISO/IEC 2006 – All rights reserved
Copyright International Organization for Standardization
Provided by IHS under license with ISO
No reproduction or networking permitted without license from IHS
Not for Resale

25.5 Timing jitter

The timing jitter Jt is defined as the standard deviation (sigma) of the separately measured time intervals of leading-to-trailing and trailing-to-leading edges of the read signal.

The data shall be written in accordance with 23.3 and the procedures described in Annex N.

The signal shall be read and detected using the Read Channel circuit defined in Annex L under the conditions specified in 23.2. The timing jitter Jt shall be measured according to the procedure in Annex M.

25.5.1 Timing jitter for 2T marks and spaces

The timing jitter for 2T marks and spaces shall meet the following requirement in the Formatted Zone:

$$Jt\ (2T) \leq 0{,}20\ T$$

25.5.2 Timing jitter for 3T to 9T marks and spaces

The timing jitter for 3T to 9T marks and spaces shall meet the following requirement in the Formatted Zone:

$$Jt\ (3T \text{ to } 9T) \leq 0{,}15\ T$$

25.6 Asymmetry

The asymmetry (see Annex P) of the user written marks relates to the deviation of the centre levels of the signals generated by two distinct repeating mark and space length patterns.

25.6.1 Asymmetry (3T-2T)

For type WORM media the asymmetry (3T-2T) in a sector shall be in the range – 0,25 to + 0,10.

For type RW media the asymmetry (3T-2T) in a sector shall be in the range – 0,20 to + 0,20.

25.6.2 Asymmetry (9T-3T)

For type WORM media the asymmetry (9T-3T) in a sector shall be in the range – 0,0 to + 0,25.

For type RW media the asymmetry (9T-3T) in a sector shall be in the range – 0,18 to + 0,15.

26 Erase power determination for Type RW media

Erase power determination is critical for maximizing the rewrite cycle life of Type RW media. Excessive erase power levels can damage the recording layer, and thereby reduce the rewrite cycle life.

The media manufacturer shall determine the erase to write power ratios that are recorded in the SDI sectors. The erase power is the optical power level for the given radius and rotational speed that is sufficient to erase or direct overwrite the current track, without damaging the recording layer or erasing data on the adjacent tracks.

The media manufacturer shall perform direct overwrite cycle testing at varying erase powers to determine the power level that maximizes the number of rewrite cycles. The resulting optimal erase power level must comply with all requirements of clause 25, and also meet the requirement of 26.1 for cross-erase.

This procedure shall be repeated to determine the erase to write power ratio for both Groove and Land Recording Tracks for each band of the disk.

--`,,```,,,,````-`-`,,`,,`,`,,`---

© ISO/IEC 2006 – All rights reserved

Copyright International Organization for Standardization
Provided by IHS under license with ISO
No reproduction or networking permitted without license from IHS
Not for Resale

26.1 Cross-Erase for Type RW Media

The following procedure shall be used to determine the effect of erasing and direct overwriting Recording Tracks that are adjacent to previously recorded data on Type RW media:

A. Select any group of three adjacent tracks *n*-1, *n*, and *n*+1 in the Formatted Zone:

- Erase Recording Tracks *n*-1 and *n*+1 using the erase power determined in clause 26.
- Write a series of 2T marks followed by 2T spaces in the Data field of the sectors on Recording Track *n* at the frequency specified for each band in the Formatted Zone. The write conditions shall be as specified in 23.3 (see also Annex CC).
- Measure the initial NBSNR on track *n* as specified in 25.2.

B. Using a radial tracking offset equal to zero:

- Write the Data fields of track *n*-1 and track *n*+1 with a series of 2T marks followed by 2T spaces.
- Write the Data fields of track *n*-1 and track *n*+1 with a series of 9T marks followed by 9T spaces.
- Erase the Data fields of track *n*-1 and track *n*+1.

C. Adjust the radial tracking offset by 40 nm toward the outer diameter of the disk:

- Write the Data fields of track *n*-1 and track *n*+1 with a series of 2T marks followed by 2T spaces.
- Write the Data fields of track *n*-1 and track *n*+1 with a series of 9T marks followed by 9T spaces.
- Erase the Data fields of track *n*-1 and track *n*+1.

D. Adjust the radial tracking offset by 40 nm toward the inner diameter of the disk:

- Write the Data fields of track *n*-1 and track *n*+1 with a series of 2T marks followed by 2T spaces.
- Write the Data fields of track *n*-1 and track *n*+1 with a series of 9T marks followed by 9T spaces.
- Erase the Data fields of track *n*-1 and track *n*+1.

E. Repeat steps B, C, and D on track *n*-1 and track *n*+1 for 10 complete cycles.

F. Using a radial tracking offset equal to zero, measure the final NBSNR on track *n*.

For the specified cross-erase test conditions, the change in NBSNR of track *n* shall be

$$NBSNR_{inital} - NBSNR_{final} < 1{,}0 \text{ dB}$$

© ISO/IEC 2006 – All rights reserved
Copyright International Organization for Standardization
Provided by IHS under license with ISO
No reproduction or networking permitted without license from IHS
Not for Resale

Section 6 — Characteristics of user data

27 User Data – Method of testing

Clauses 28 and 29 describe a series of measurements to test conformance of the user data on the disk with this International Standard. It checks the legibility of both Preformatted Header and user written data. The user written data is assumed to be arbitrary. The user written data may have been written by any drive in any environment. The read tests shall be performed on the Reference Drive.

Whereas defects are disregarded in clauses 20 to 26, they are included in clauses 28 and 29 as unavoidable deterioration of the read signal. The severity of a defect is determined by the correctability of the ensuing errors by the error detection and correction circuits in the Read Channel defined below. The requirements in clauses 28 and 29 define a minimum quality of the data, necessary for data interchange.

27.1 Environment

All signals specified in clauses 28 and 29 shall be within their specified ranges with the cartridge in any environment in the range of allowed operating environments defined in 8.1.2. It is recommended that before testing, the entrance surface of the optical disk shall be cleaned according to the instructions of the manufacturer of the disk.

27.2 Reference Drive

All signals specified in clauses 28 and 29 shall be measured in the Reference Drive. The drive shall have the following characteristics for the purpose of these tests:

27.2.1 Optics and mechanics

The focused optical beam shall have the properties specified in 9.2. The disk shall rotate as specified in 9.5.

27.2.2 Read power

The read power shall be 500 μW ± 25 μW.

27.2.3 Read Channel

The Read Channel shall be as specified in 9.3 and Annex L.

27.2.4 Mark quality

The signal in the Read Channel shall be processed (see Annex L) with the specified low-pass filter and equalization, and compared with the threshold follower level. The threshold level shall be adjusted to minimize the bias of the mark and space intervals from their desired (or ideal) values of 2T, 3T, … 9T. The output signals from the comparator are converted to binary signals with the edge detector (see also Annex N).

The timing jitter in this section is defined as the standard deviation (sigma) of the separately measured time intervals of leading-to-trailing and trailing-to-leading edges excluding outlying observations caused by defects. The measurement is made using a TIA with the output signals from the edge detectors of the marks and spaces in a sector. Therefore, the number of marks and spaces in a sector limits the independent interval samples for this measurement. The timing jitter values shall be expressed as a percentage of the Channel bit time T.

The converter shall operate correctly for analog signals from embossed marks with signal characteristics as determined by clause 22.

© ISO/IEC 2006 – All rights reserved

Copyright International Organization for Standardization
Provided by IHS under license with ISO
No reproduction or networking permitted without license from IHS
Not for Resale

The converter shall operate correctly for analog signals from user written marks with signal characteristics as determined by clause 25.

27.2.5 Channel bit clock

The Channel bit clock shall be virtually locked to the signals from the analog-to-binary converters during reading to provide a time base for the leading and/or the trailing edges of the binary signals. During reading, the Channel bit clock shall be adjusted in order to minimize the accumulated value of timing errors of the leading-to-trailing and trailing-to-leading edges from the Channel bit clock.

The Channel bit clock shall be virtually locked to the wobble groove signal during writing, rewriting, and erasing to provide a time base for the write pulse generator. During writing, rewriting, or erasing, the Channel bit clock shall be adjusted in order to minimize the accumulated value of timing error from the groove wobble period and 240 Channel bit clock periods (240 T).

27.2.6 Binary-to-digital converters

The binary signals shall be correctly converted to the data bytes with the binary-to-digital converters based on the sector format and recording code defined in clauses 15 and 16. The 2T marks and 2T spaces in the recording area shall be detected using the ESISIC algorithm described in Annex Q.

27.2.7 Error correction

Correction of errors in the data bytes shall be carried out by an error detection and correction system based on the definition in H.2 and H.3 of Annex H.

27.2.8 Tracking

During the measurement of the signals, the focus of the optical beam shall have an axial deviation of not more than

e_{max} (axial) = 0,3 µm

from the recording layer, and it shall have a radial deviation of not more than

e_{max} (radial) = 0,04 µm

from the centre of a Groove or a Land Recording Track.

28 Minimum quality of a sector

This clause specifies the minimum quality of the Header and Data fields of a sector as required for interchange of the data contained in that sector. The quality shall be measured on the Reference Drive specified in 27.2.

A byte error occurs when one or more bits in a byte have a wrong setting, as detected by ECC and/or CRC circuits.

28.1 Headers ID

At least one of the three ID fields contained in the Preformatted Headers shall not have any byte errors as checked by the CRC in the field. Sectors shall only be recorded with user data under this condition.

Sectors shall be readable under the condition that all three of the ID fields have byte errors as checked by CRC.

© ISO/IEC 2006 – All rights reserved
Copyright International Organization for Standardization
Provided by IHS under license with ISO
No reproduction or networking permitted without license from IHS
Not for Resale

28.2 User-written data

28.2.1 Recording field

When the VFO1 field is recorded, it shall start at 508 Channel bits – 6/+ 133 Channel bits from the end of the Preformatted Header for Type RW media.

When the VFO1 field is recorded, it shall start at 396 Channel bits ± 6 Channel bits from the end of the Preformatted Header for Type WORM media.

28.2.2 Byte errors

The user written data in a sector shall not contain any byte errors that cannot be corrected by the error correction defined in 27.2.7.

28.2.3 Timing mean

The timing mean of the user written marks shall comply with the requirements of 25.4.

28.2.4 Timing jitter

The timing jitter of the user written marks shall comply with the requirements of 25.5.

28.2.5 Asymmetry

The asymmetry of the user written marks shall comply with the requirements of 25.6.

28.3 Wobble signal

The wobble signal shall comply with the requirements of 21.5.

29 Data interchange requirements

A disk offered for interchange of data shall comply with the following requirements (see also Annex R).

29.1 Tracking

The focus of the optical beam shall not jump tracks unintentionally.

29.2 User-written data

Any sector written in the User Zone that does not comply with 28.2 shall have been replaced according to the rules of the Defect Management as defined in clause 19.

29.3 Quality of disk

The quality of the disk is reflected in the number of replaced sectors in the User Zone. This International Standard allows a maximum number of replaced sectors per side (see clause 19).

© ISO/IEC 2006 – All rights reserved

Copyright International Organization for Standardization
Provided by IHS under license with ISO
No reproduction or networking permitted without license from IHS
Not for Resale

Annex A
(normative)

Air cleanliness class 100 000

The classification of air cleanliness is based on a particle count with a maximum allowable number of specified minimum sized particles per unit volume, and on a statistical average particle size distribution.

A.1 Definition

The particle count shall not exceed a total of 3 500 000 particles per cubic metre of a size 0,5 µm and larger.

The statistical average particle size distribution is given in figure A.1. Class 100 000 means that 3 500 000 particles per cubic metre of a size of 0,5 µm and larger are allowed, but only 25 000 particles per cubic metre of a size of 5,0 µm and larger.

It shall be recognized that single sample distribution may deviate from this curve because of local or temporary conditions. Counts below 350 000 particles per cubic metre are unreliable except when a large number of a samplings is taken.

A.2 Test method

For particles of size in the range of 0,5 µm to 5,0 µm, equipment employing light-scattering principles shall be used. The air in the controlled environment is sampled at a known flow rate. Particles contained in the sampled air are passed through an illuminated sensing zone in the optical chamber of the instrument. Light scattered by individual particles is received by a photo detector which converts the light pulses into electrical current pulses. An electronic system relates the pulse height to particle size and counts the pulses such that the number of particles in relation to particle size is registered or displayed.

© ISO/IEC 2006 – All rights reserved
Copyright International Organization for Standardization
Provided by IHS under license with ISO
No reproduction or networking permitted without license from IHS
Not for Resale

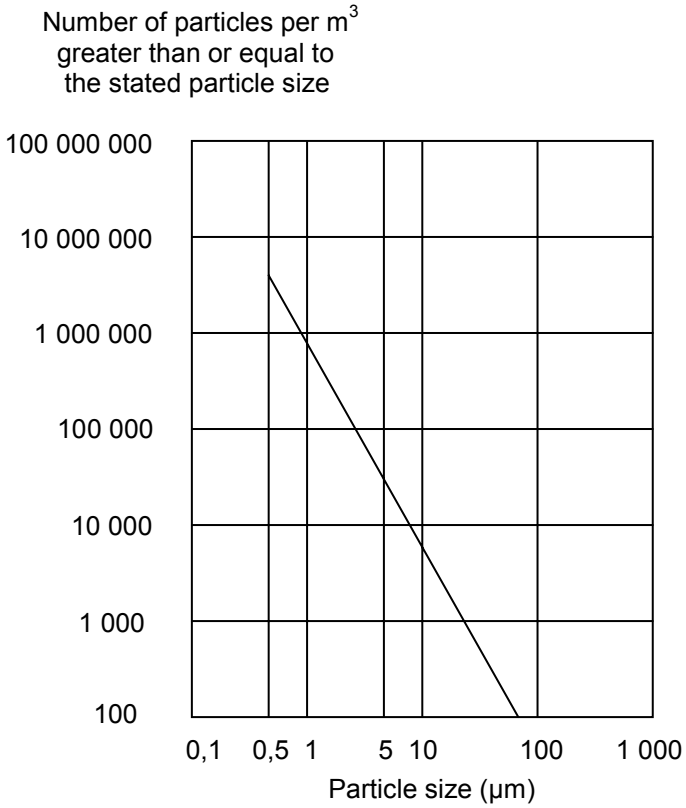

Figure A.1 — Particle size distribution curve

© ISO/IEC 2006 – All rights reserved
Copyright International Organization for Standardization
Provided by IHS under license with ISO
No reproduction or networking permitted without license from IHS
Not for Resale

Annex B
(normative)

Edge distortion test

B.1 Purpose

The distortion test checks if the case is free from unacceptable distortion and protrusions along its edges. The test is made by causing the cartridge to pass through the vertical slot of a gauge while applying a specified force in addition to the gravitational pull.

B.2 Distortion gauge construction

The gauge shall be made of a suitable material, e.g. of chrome-plated carbon steel. The inner surfaces shall be polished to a surface finish of 5 µm peak-to-peak.

B.3 Distortion gauge dimensions

The dimensions shall be as follows (see figure B.1):

A = 155,0 mm

B = 136,0 mm ± 0,1 mm

C = 10,0 mm ± 0,1 mm

D = 11,40 mm ± 0,01 mm

E = 11,60 mm min.

B.4 Requirement

When the cartridge is inserted vertically into the gauge, a vertical downward force F of 2,7 N maximum, applied to the centre of the top edge of the cartridge, shall cause the cartridge to pass through the gauge.

--`,,```,,,,````-`-`,,`,,`,`,,`---

© ISO/IEC 2006 – All rights reserved
Copyright International Organization for Standardization
Provided by IHS under license with ISO
No reproduction or networking permitted without license from IHS
Not for Resale

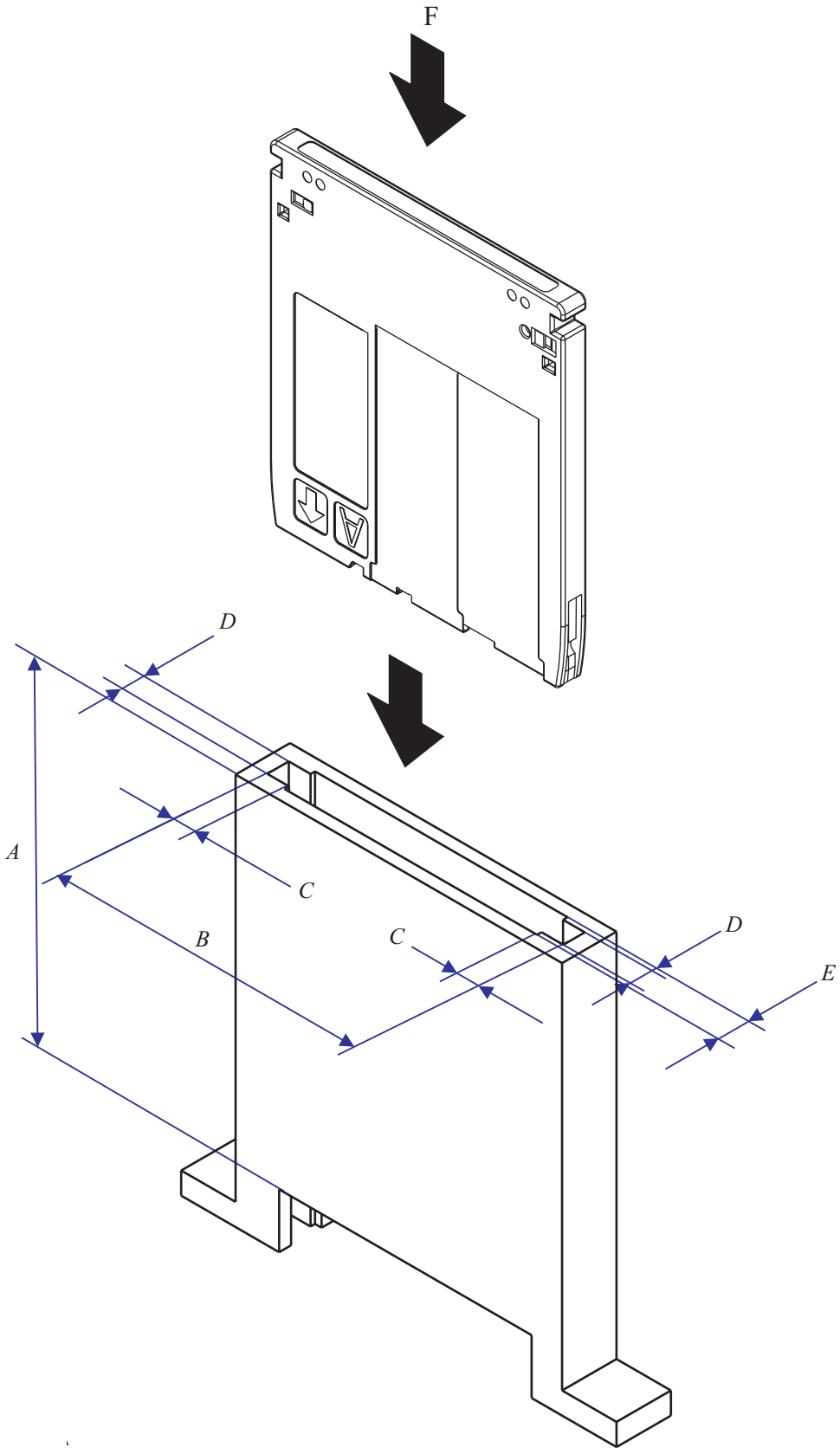

Figure B.1 — Distortion gauge

© ISO/IEC 2006 – All rights reserved
Copyright International Organization for Standardization
Provided by IHS under license with ISO
No reproduction or networking permitted without license from IHS
Not for Resale

Annex C
(normative)

Compliance test

C.1 Purpose

The compliance test checks the flatness and flexibility of the case by forcing the four reference surfaces of the cartridge into a plane.

C.2 Reference surfaces

The location of the four reference surfaces S1, S2, S3, and S4 is defined in 10.5.4 and figure 4.

C.3 Compliance gauge

The test gauge consists of a base plate on which four posts P1, P2, P3, and P4 are fixed so as to correspond to the surfaces S1, S2, S3, and S4 respectively (see Figure C.1). The dimensions are as follows (see Figures C.2 and C.3):

L_a = 122,0 mm ± 0,2 mm

L_b = 4,0 mm ± 0,5 mm

L_c = 130,0 mm ± 0,5 mm

L_d = 101,0 mm ± 0,5 mm

D_a = 6,50 mm ± 0,01 mm

$D_b = 4{,}00\ ^{+\ 0{,}00\ \text{mm}}_{-\ 0{,}02\ \text{mm}}$

D_c = 5,50 mm ± 0,01 mm

H_a = 1,0 mm ± 0,1 mm

H_b = 2,0 mm max.

After assembly, the upper annular surfaces of the four posts shall lie between two horizontal planes spaced 0,01 mm apart.

C.4 Test conditions

The cartridge shall be placed with its reference surfaces onto the posts of the horizontal gauge.A vertical down force F of 0,4 N shall be exerted on the cartridge opposite each of the four posts.

--`,,```,,,,````-`-`,,`,,`,`,,`---
© ISO/IEC 2006 – All rights reserved
Copyright International Organization for Standardization
Provided by IHS under license with ISO
No reproduction or networking permitted without license from IHS
Not for Resale

C.5 Requirement

Under the conditions of C.4, any three of the four surfaces S1 to S4 shall be in contact with the annular surface of respective posts. Any gap between the remaining surface S and the annular surface of its post shall not exceed 0,1 mm.

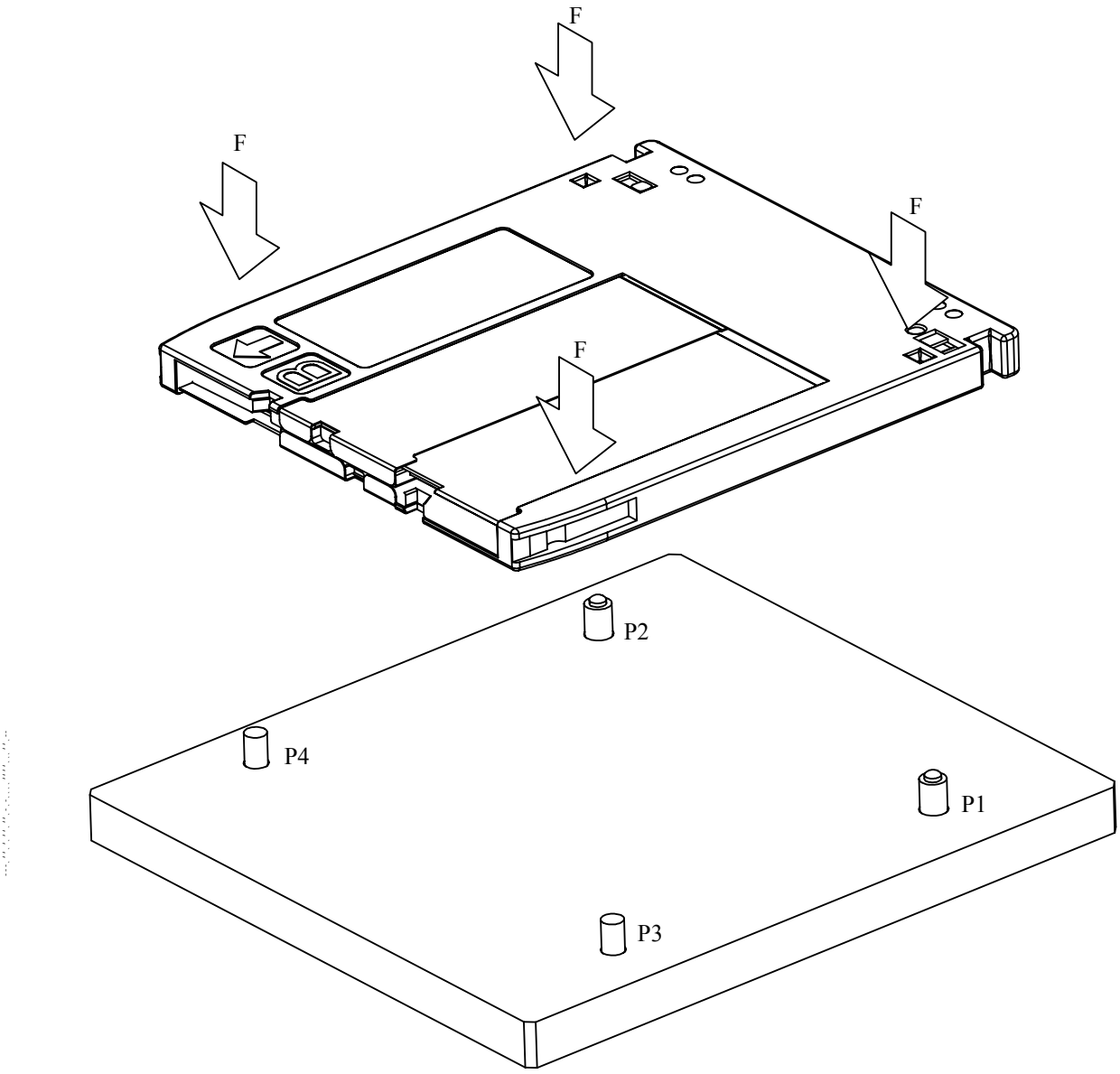

Figure C.1 — Compliance gauge

© ISO/IEC 2006 – All rights reserved

Copyright International Organization for Standardization
Provided by IHS under license with ISO
No reproduction or networking permitted without license from IHS
Not for Resale

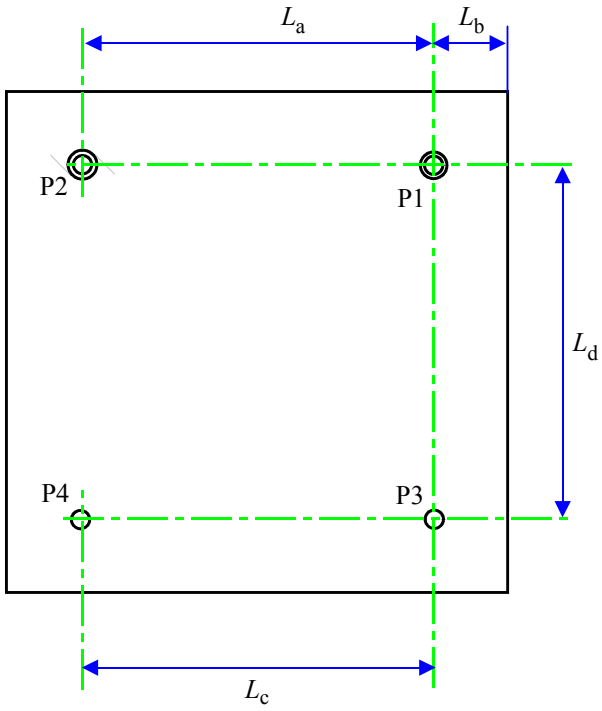

Figure C.2 — Location of the posts

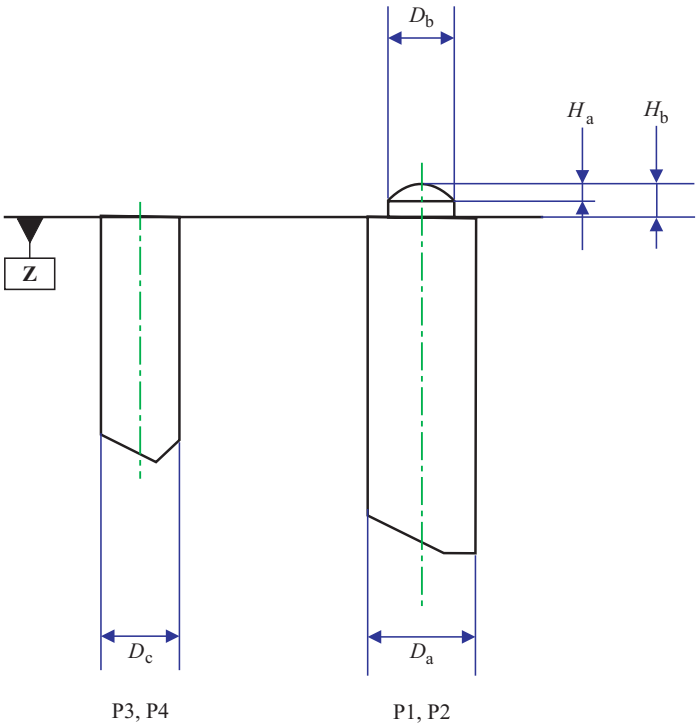

Figure C.3 — Detail of the posts

© ISO/IEC 2006 – All rights reserved
Copyright International Organization for Standardization
Provided by IHS under license with ISO
No reproduction or networking permitted without license from IHS
Not for Resale

Annex D
(normative)

Cartridge electro-static discharge test

D.1 Test procedure

The test procedure shall use the following steps:

1 Acclimate test cartridges at 10 % relative humidity for at least 12 hours before testing.

2 Remove all charge from the test cartridge using ionized air.

3 Mount the cartridge in the fixture shown in figure D.1.

4 Apply 1,00 kV to the charge plate.

5 10 seconds ± 1 second after applying 1,00 kV, remove the voltage source (charge plate is floating).

6 Measure the decay time defined as the time required for the charged plate voltage to decay 5 % to 950 V.

Prior to testing a cartridge, ensure there is a non-ionizing environment by performing steps 4 – 6 above with no cartridge present. Decay time with no cartridge shall be larger than 100 seconds.

D.2 Specification

The decay time shall be smaller than 30 seconds at 10 % relative humidity and 25 °C.

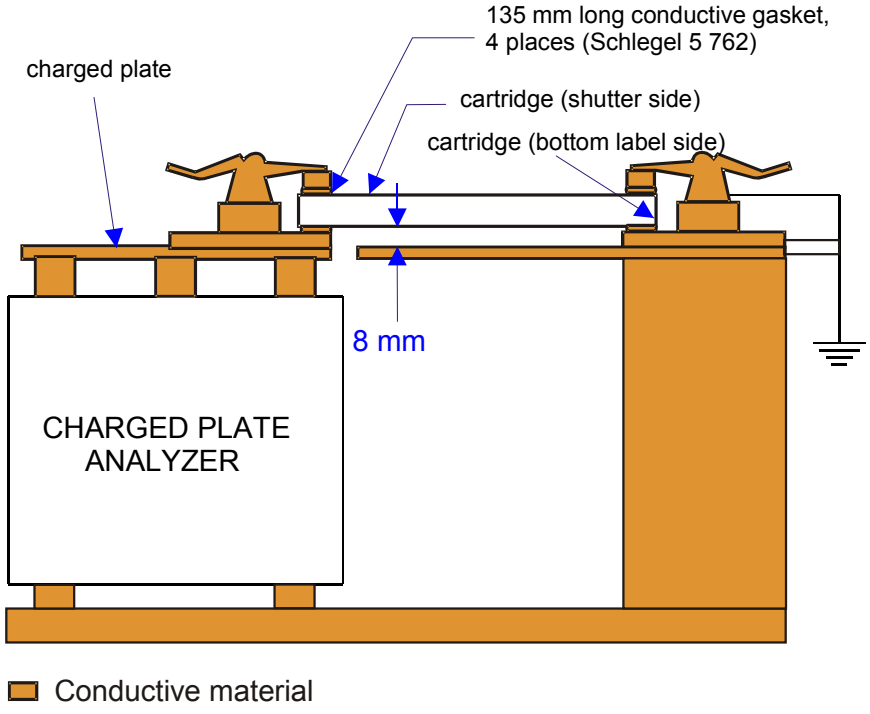

Figure D.1 — Cartridge electro-static discharge test fixture

© ISO/IEC 2006 All rights reserved
Copyright International Organization for Standardization
Provided by IHS under license with ISO
No reproduction or networking permitted without license from IHS
Not for Resale

Annex E
(normative)

Test method for measuring the adsorbent force of the hub

E.1 Purpose

The purpose of this test is to determine the magnetic characteristic of the magnetizable material of the hub.

E.2 Dimensions

The test device (see figure E.1) consists of a spacer, a magnet, a back yoke, and a centre shaft. The dimensions of the test device are as follows:

D_d = 8,0 mm ± 0,1 mm

D_e = 20,0 mm ± 0,1 mm

D_f = 19,0 mm max.

$D_g = 3{,}9 \text{ mm}^{+0{,}0 \text{ mm}}_{-0{,}1 \text{ mm}}$

H_c = 0,40 mm ± 0,01 mm

H_d = 1,2 mm (typical, to be adjusted to meet the force requirement of E.4)

E.3 Material

The material of the test device shall be:

Magnet : Any magnetizable material, typically Sm-Co

Back yoke : Any suitable magnetizable material

Spacer : Non-magnetizable material or air gap

Centre shaft : Non-magnetizable material

E.4 Characteristics of the magnet with back yoke

Number of poles : 4 (typical)

Maximum energy product (BH_{max}) :175 kJ/m^3 ± 16 kJ/m^3

The characteristics of the magnet with back yoke shall be adjusted so that with a pure nickel plate of the following dimensions (see figure E.2), and the adsorbent force of this plate at the point H_c = 0,4 mm when spaced from the magnet surface shall be 9,5 N ± 0,6 N.

D_h = 7,0 mm ± 0,1 mm

© ISO/IEC 2006 – All rights reserved
Copyright International Organization for Standardization
Provided by IHS under license with ISO
No reproduction or networking permitted without license from IHS
Not for Resale

D_j = 22,0 mm ± 0,1 mm

H_e = 2,0 mm ± 0,05 mm

E.5 Test condition for temperature

This condition shall be as specified in 8.1.1.

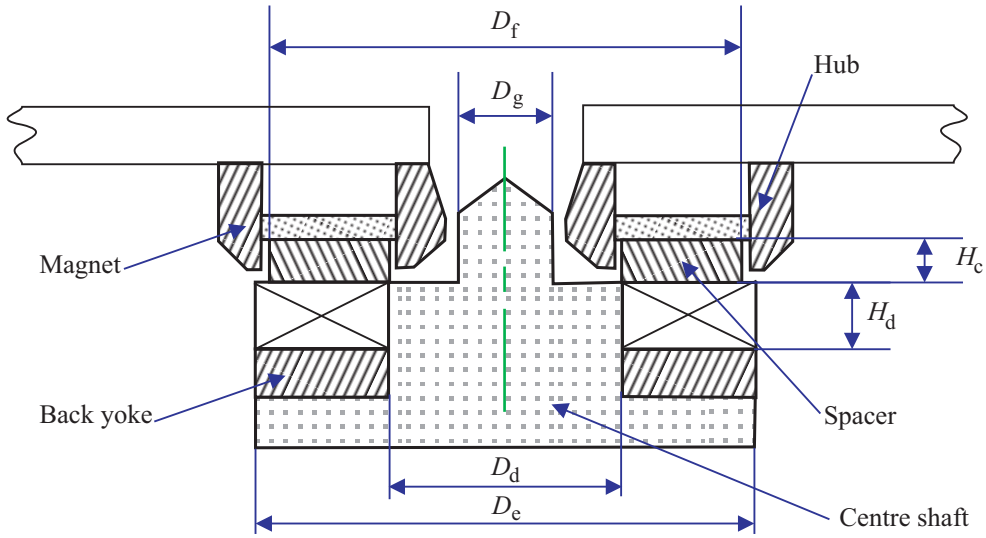

Figure E.1 — Test device for the clamping characteristic of the hub

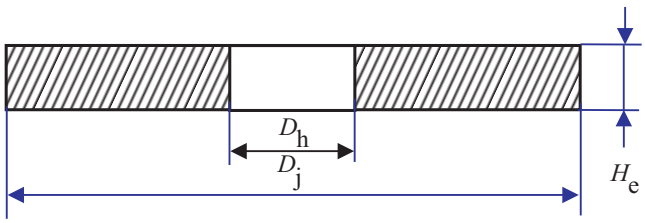

Figure E.2 — Calibration plate of the test device

© ISO/IEC 2006 – All rights reserved
Copyright International Organization for Standardization
Provided by IHS under license with ISO
No reproduction or networking permitted without license from IHS
Not for Resale

Annex F
(normative)

CRC for ID fields

The sixteen bits of the CRC shall be computed over the first four bytes of the ID field. The generator polynomial shall be

$$G(x) = x^{16} + x^{12} + x^5 + 1$$

The residual polynomial shall be

$$R(x) = \left(\sum_{i=16}^{i=31} \overline{a_i}\, x^i + \sum_{i=0}^{i=15} a_i\, x^i \right) x^{16} \bmod G(x)$$

where a_i denotes a bit of the first four bytes and $\overline{a_i}$ an inverted bit. The highest order bit of the first byte is a_{31}.

The sixteen bits c_k of the CRC are defined by

$$R(x) = \sum_{k=0}^{k=15} c_k\, x^k$$

where c_{15} is recorded as the highest order bit of the fifth byte in the ID field and c_0 is the lowest order bit of the sixth byte in the ID field.

© ISO/IEC 2006 – All rights reserved
Copyright International Organization for Standardization
Provided by IHS under license with ISO
No reproduction or networking permitted without license from IHS
Not for Resale

Annex G
(normative)

Data field scrambler implementation

G.1 Data field scrambler purpose

The purpose of Data field scrambling is to randomize user data to generate various mark and space lengths in the encoded data. The data scrambler tends to reduce the d.c. content of the encoded data waveform. This is of primary importance for sectors with block of fixed data bytes. In these cases, without scrambling, the encoded data could consist of the same repeated patterns, which can generate a large d.c. content.

G.2 Data field scrambler order of processing

The Data field shall be as detailed in Annex H.

The entire Data field except for Resync, Reference, and VFO2 bytes shall be scrambled. The order of processing for encoding shall be

1 Interleave user data and Control bytes
2 Generate CRC and ECC bytes
3 Scramble bytes of the Data field
4 Insert Resync, Reference, and VFO2 bytes (not scrambled)

The order of processing for decoding shall be the reverse of the encoding process

1 Remove Resync, Reference, and VFO2 bytes
2 Unscramble bytes of Data field
3 Perform ECC and check CRC
4 De-interleave user data and Control bytes

G.3 Data field scrambler circuit and preset values

The scrambling byte generation circuit shall be as shown in figure G.1. The circuit consists of a feedback bit shift register in which bits r_7 (msb) to r_0 (lsb) are used as a scrambling byte at each 8-bit shift.

The initial preset number, shown in table G.1 is equivalent to least significant 4 bits of the 31-bit PBA value, b_3 to b_0, in which b_3 is the msb and b_0 is the lsb. At the beginning of each Data field, the initial value of r_{14} to r_0 shall be preset corresponding to the PBA of the sector as shown in table G.1 (the msb of the pre-set value shall be discarded).

The initial value shall be changed every sector, and after 16 sectors, the sequence shall be repeated.

The lower 8 bits of the initial values of r_7 to r_0 shall be taken out as scrambling byte S_1. After that, the 8-bit shift shall be repeated for each scrambled byte of the Data field. As a result, scrambling bytes S_2 to S_n shall be taken from the shift register at each 8-bit shift.

© ISO/IEC 2006 – All rights reserved

Copyright International Organization for Standardization
Provided by IHS under license with ISO
No reproduction or networking permitted without license from IHS
Not for Resale

Table G.1 — Initial value of shift register

Initial preset number	Initial register value
(0)	(0001)
(1)	(5500)
(2)	(0002)
(3)	(2A00)
(4)	(0004)
(5)	(5400)
(6)	(0008)
(7)	(2800)
(8)	(0010)
(9)	(5000)
(A)	(0020)
(B)	(2001)
(C)	(0040)
(D)	(4002)
(E)	(0080)
(F)	(0005)

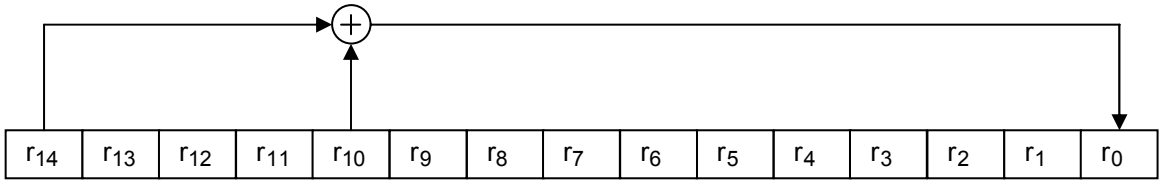

Figure G.1 — Feedback shift register for generating the scrambling byte

Scrambling for data byte D_k in figure G.1 is defined as follows:

$D'_k = D_k \oplus S_k$ (k = 1 to n)

where

D'_k is the scrambled data byte

D_k is an unscrambled data byte

S_k is the scrambling byte from the feedback shift register

n is the number of data bytes to be scrambled in the Data field

and $\oplus$ means Exclusive-OR logical operation.

© ISO/IEC 2006 – All rights reserved
Copyright International Organization for Standardization
Provided by IHS under license with ISO
No reproduction or networking permitted without license from IHS
Not for Resale

Annex H
(normative)

Interleave, CRC, ECC, Resync, and Reference for the Data field

H.1 Interleave

The different bytes recorded on the disk for each sector with 8192 data-user bytes shall be designated as follows

D_n are user data bytes

$P_{q,r}$ are Control bytes (see 15.10.3)

C_k are CRC check bytes

$E_{s,t}$ are ECC check bytes

These bytes shall be ordered in a sequence A_n in the order in which they shall be recorded on the disk. The order of n of D_n is the same as that in which they are input from the interface. Depending on the value of n, these elements are

for $1 \le n \le 8\,192$: $A_n = D_n$

for $8\,193 \le n \le 8\,204$: $A_n = P_{q,r}$

for $8\,205 \le n \le 8\,208$: $A_n = C_k$

for $8\,209 \le n \le 9\,424$: $A_n = E_{s,t}$

where:

$q = \text{int}\,[(n - 8\,193) / 4] + 1$

$r = [(n - 8\,193) \bmod 4] + 1$

$k = n - 8\,204$

$s = [(n - 8\,209) \bmod 38] + 1$

$t = \text{int}\,[(n - 8\,209) / 38] + 1$

The notation int [x] denotes the largest integer not greater than x.

The first four parts of A_n are 38-way interleaved by mapping them onto a two-dimensional matrix B_{ij} with 216 rows and 38 columns. Thus

for $1 \le n \le 8\,208$: $B_{i,j} = A_n$

where:

$i = 215 - \text{int}\,[(n - 1) / 38]$

$j = (n - 1) \bmod 38$

© ISO/IEC 2006 – All rights reserved

Copyright International Organization for Standardization
Provided by IHS under license with ISO
No reproduction or networking permitted without license from IHS
Not for Resale

H.2 CRC

The CRC and the ECC shall be computed over the Galois field based on the primitive polynomial

$$G_P(x) = x^8 + x^4 + x^3 + x^2 + 1$$

The generator polynomial for the CRC bytes shall be

$$G_C(x) = \prod_{i=32}^{i=35} (x + \alpha^i) = x^4 + (68)\, x^3 + (69)\, x^2 + (F1)\, x + (DA)$$

where the element α = 0000 0010.

The contents of the four check bytes are defined by the residual polynomial

$$R_C(x) = I_C(x)\, x^4 \bmod G_C(x)$$

$$R_C(x) = \sum_{k=1}^{k=4} C_k\, x^{4-k}$$

The last equation specifies the storage locations for the coefficients of the polynomial.

H.2.1 Check byte calculation

The four check bytes of CRC shall be computed over the user data and the control bytes as specified in H.2.

The information polynomial shall be

$$I_C(x) = \left[\sum_{i=1}^{i=215} \left(\sum_{j=0}^{j=37} (B_{i,j})\, x^i \right) \right] + \sum_{j=0}^{j=33} (B_{0,j})$$

H.3 ECC

The primitive polynomial $G_P(x)$ and the element α^i shall be as specified in H.2. The generator polynomial for the check bytes of the ECC shall be

$$G_E(x) = \prod_{i=0}^{i=31} (x + \alpha^i)$$

where the element α = 0000 0010.

The 1216 check bytes of the ECC shall be computed over the user bytes, the control bytes, and the CRC bytes. The corresponding 38 information polynomials shall be

$$I_{Ej}(x) = \sum_{i=0}^{i=215} (B_{i,j})\, x^i$$

© ISO/IEC 2006 – All rights reserved
Copyright International Organization for Standardization
Provided by IHS under license with ISO
No reproduction or networking permitted without license from IHS
Not for Resale

where $0 \le j \le 37$.

The contents of the 32 check bytes $E_{s,t}$ for each polynomial $I_{Ej}(x)$ are defined by the residual polynomial

$$R_{Ej}(x) = I_{Ej}(x)\ x^{32} \bmod G_E(x)$$

$$R_{Ej}(x) = \sum_{t=1}^{t=32} E_{j+1,t}\ x^{32-t}$$

The last equation specifies the storage locations for the coefficients of the polynomial.

H.4 Resync

The Resync fields (see Annex J) shall be inserted in the Data field to prevent loss of synchronization and limit the propagation of errors in the user data. They are numbered consecutively and shall contain one of the two following patterns of Channel bits.

010 000 000 010 000 000 010 010	for RS1, RS3, RS5, …
010 000 000 010 000 000 010 000	for RS2, RS4, RS6, …

A field RS*n* shall be inserted between bytes A_{152n} and A_{152n+1}, where $1 \le n \le 62$.

RS62 shall be inserted immediately after byte A_{9424}.

H.5 Reference

The Reference fields (see Annex J) shall be inserted in the Data field to provide read signal reference levels. They are numbered consecutively and shall contain the following pattern of Channel bits.

010 010 010 010

A field RF*n* shall be inserted between bytes A_{38n} and A_{38n+1}, where $0 \le n \le 248$.

RF0 shall be inserted between the Sync field and byte A_1. RF248 shall be inserted between RS62 and the PA field.

The Reference byte shall be inserted after the Resync bytes whenever both are inserted between the same Data field bytes.

H.6 VFO2, Extra Sync (SBX), and Extra Reference (RFX) fields

The VFO2, SBX, and RFX fields shall be inserted in the Data field to provide redundant fields in the event that the primary fields (VFO1, Sync, and RF0) are obscured or damaged.

These three fields shall be inserted in the following order between bytes RF8 and A_{305}:

1) VFO2
2) SBX
3) RFX.

© ISO/IEC 2006 – All rights reserved

Copyright International Organization for Standardization
Provided by IHS under license with ISO
No reproduction or networking permitted without license from IHS
Not for Resale

H.6.1 VFO2

The VFO2 field shall be inserted in the Data field to provide a redundant field for locking the VFO in the event that VFO1 is obscured or damaged. The VFO2 pattern shall be as defined in 15.8.

H.6.2 Extra Sync (SBX)

The Extra Sync field shall be inserted in the Data field after VFO2 to provide a redundant field for synchronization in the event that the Sync field is obscured or damaged. The Extra Sync pattern shall be the same as the Sync field defined in 15.9.

H.6.3 Extra Reference (RFX)

The Extra Reference field shall be inserted in the Data field after SBX to provide a redundant field for reference amplitude. The Extra Reference pattern shall be the same as the Reference field defined in H.5.

H.7 Recording sequence for Data field

The elements of the Data field shall be recorded on the disk according to sequence A_n immediately following the Sync bytes, with Resync bytes inserted as specified in H.4, Reference bytes inserted as specified in H.5, and VFO2, SBX, RFX bytes inserted as specified in H.6.

Figure H.1 shows in matrix form the arrangement of these elements. The sequence of recording is from top-to-bottom and from left-to-right.

SB designates a Sync byte

D designates a user byte

RS designates a Resync byte

RF designates a Reference byte

VF designates a VFO2 byte

P designates a Control byte

C designates a check byte for CRC

E designates a check byte for ECC

PA designates the PA byte

Figure H.1 shows that the first 216 rows contain in columns 0 to 37, the user bytes, the Control bytes, and the CRC check bytes. The next 32 rows contain only ECC check bytes.

© ISO/IEC 2006 – All rights reserved
Copyright International Organization for Standardization
Provided by IHS under license with ISO
No reproduction or networking permitted without license from IHS
Not for Resale

Copyright International Organization for Standardization
Provided by IHS under license with ISO
No reproduction or networking permitted without license from IHS

© ISO/IEC 2006 – All rights reserved

Not for Resale

Column No. j →					0	. . .	21	22	23	24	25	26	27	28	29	30	31	32	33	34	35	36	37	Row No. i ↑
	SB1	SB2	SB3	SB4	RF0	D1	. . .	D22	D23	D24	D25	D26	D27	D28	D29	D30	D31	D32	D33	D34	D35	D36	D37	D38	215
					RF1	D39	. . .	D60	D61	D62	D63	D64	D65	D66	D67	D68	D69	D70	D71	D72	D73	D74	D75	D76	214
					RF2	D77	. . .	D98	D99	D100	D101	D102	D103	D104	D105	D106	D107	D108	D109	D110	D111	D112	D113	D114	213
					RF3	D115	. . .	D136	D137	D138	D139	D140	D141	D142	D143	D144	D145	D146	D147	D148	D149	D150	D151	D152	212
			RS1,1	RS1,2	RF4	D153	. . .	D174	D175	D176	D177	D178	D179	D180	D181	D182	D183	D184	D185	D186	D187	D188	D189	D190	211
					RF5	D191	. . .	D212	D213	D214	D215	D216	D217	D218	D219	D220	D221	D222	D223	D224	D225	D226	D227	D228	210
					RF6	D229	. . .	D250	D251	D252	D253	D254	D255	D256	D257	D258	D259	D260	D261	D262	D263	D264	D265	D266	209
216 rows					RF7	D267	. . .	D288	D289	D290	D291	D292	D293	D294	D295	D296	D297	D298	D299	D300	D301	D302	D303	D304	208
			RS2,1	RS2,2	RF8	VF1 through VF50																		**
	SBX1	SBX2	SBX3	SBX4	RFX	D305	. . .	D326	D327	D328	D329	D330	D331	D332	D333	D334	D335	D336	D337	D338	D339	D340	D341	D342	207
					RF9	D343	. . .	D364	D365	D366	D367	D368	D369	D370	D371	D372	D373	D374	D375	D376	D377	D378	D379	D380	206
			. . .	. . .	. . .	. . .	. . .	. . .	. . .	. . .	. . .	. . .	. . .	. . .	. . .	. . .	. . .	. . .	. . .	. . .	. . .	. . .	. . .	. . .	. . .
			RS53,1	RS53,2	RF212	D8057	. . .	D8078	D8079	D8080	D8081	D8082	D8083	D8084	D8085	D8086	D8087	D8088	D8089	D8090	D8091	D8092	D8093	D8094	3
					RF213	D8095	. . .	D8116	D8117	D8118	D8119	D8120	D8121	D8122	D8123	D8124	D8125	D8126	D8127	D8128	D8129	D8130	D8131	D8132	2
					RF214	D8133	. . .	D8154	D8155	D8156	D8157	D8158	D8159	D8160	D8161	D8162	D8163	D8164	D8165	D8166	D8167	D8168	D8169	D8170	1
					RF215	D8171	. . .	D8192	P1,1	P1,2	P1,3	P1,4	P2,1	P2,2	P2,3	P2,4	P3,1	P3,2	P3,3	P3,4	C1	C2	C3	C4	0
			RS54,1	RS54,2	RF216	E1,1	. . .	E22,1	E23,1	E24,1	E25,1	E26,1	E27,1	E28,1	E29,1	E30,1	E31,1	E32,1	E33,1	E34,1	E35,1	E36,1	E37,1	E38,1	-1
					RF217	E1,2	. . .	E22,2	E23,2	E24,2	E25,2	E26,2	E27,2	E28,2	E29,2	E30,2	E31,2	E32,2	E33,2	E34,2	E35,2	E36,2	E37,2	E38,2	-2
			. . .	. . .	. . .	. . .	. . .	. . .	. . .	. . .	. . .	. . .	. . .	. . .	. . .	. . .	. . .	. . .	. . .	. . .	. . .	. . .	. . .	. . .	. . .
32 rows			RS61,1	RS61,2	RF244	E1,29	. . .	E22,29	E23,29	E24,29	E25,29	E26,29	E27,29	E28,29	E29,29	E30,29	E31,29	E32,29	E33,29	E34,29	E35,29	E36,29	E37,29	E38,29	-29
					RF245	E1,30	. . .	E22,30	E23,30	E24,30	E25,30	E26,30	E27,30	E28,30	E29,30	E30,30	E31,30	E32,30	E33,30	E34,30	E35,30	E36,30	E37,30	E38,30	-30
					RF246	E1,31	. . .	E22,31	E23,31	E24,31	E25,31	E26,31	E27,31	E28,31	E29,31	E30,31	E31,31	E32,31	E33,31	E34,31	E35,31	E36,31	E37,31	E38,31	-31
					RF247	E1,32	. . .	E22,32	E23,32	E24,32	E25,32	E26,32	E27,32	E28,32	E29,32	E30,32	E31,32	E32,32	E33,32	E34,32	E35,32	E36,32	E37,32	E38,32	-32
			RS62,1	RS62,2	RF248	PA																			

** NOTEVFO2 bytes are not counted as a row of the data interleave

Figure H.1 — Data configuration and ECC with interleave

Annex I
(normative)

Drive Information Record (DIR) usage

The 4-byte Drive Information Record (P3) of the Control bytes shall be used to save drive related information into each sector as it is written or rewritten.

For normally written sectors, the DIR shall contain the following information in the specified location:

Byte 1

Bit position	7	6	5	4	3	2	1	0
	Unspecified	Verify enabled	Verify Pass Relocation	Relocation cause				

Byte 2

Bit position	7	6	5	4	3	2	1	0
	Unspecified	Relocation Attempt			Drive Serial Number bits (19 – 16)			

Byte 3

Bit position	7	6	5	4	3	2	1	0
	Drive Serial Number bits (15 – 8)							

Byte 4

Bit position	7	6	5	4	3	2	1	0
	Drive Serial Number bits (7 – 0)							

Unspecified bits shall be set to ZERO and shall be ignored in interchange.

The Verify Enabled bit shall indicate whether the sector was written with Verify after Write enabled, as follows:

Verify after Write disabled = ZERO

Verify after Write enabled = ONE.

The Verify Pass Relocation bit shall be set to ZERO for all sectors that have not been relocated.

The Verify Pass Relocation bit shall indicate whether a relocated sector was spared due to a Verify error, as follows:

© ISO/IEC 2006 – All rights reserved
Copyright International Organization for Standardization
Provided by IHS under license with ISO
No reproduction or networking permitted without license from IHS
Not for Resale

Write Error Relocation = ZERO

Verify Error Relocation = ONE.

The Relocation Cause field is vendor unique, and may be used to identify the reason for relocating the sector. The Relocation Cause field shall be ignored in interchange.

The Relocation Attempt field shall be set to ZERO for all sectors that have not been relocated.

The Relocation Attempt field shall contain the number of the relocation attempt for all relocated sectors as follows:

Attempt 1 = 0

Attempt 2 = 1

….....

Attempt 8 = 7

The Drive Serial Number is vendor unique and shall be ignored in interchange.

For SDI, DDS, PDL, and SDL sectors, the Verify Pass Relocation, Relocation Cause, and Relocation Attempt fields shall be set to ZERO.

© ISO/IEC 2006 – All rights reserved

Copyright International Organization for Standardization
Provided by IHS under license with ISO
No reproduction or networking permitted without license from IHS
Not for Resale

Annex J
(normative)

Determination of the Resync and Reference patterns

J.1 Conditions of Resync pattern

The Resync pattern shall have the following characteristics to satisfy its required function:

1. The Resync patterns consist of irregular Channel bit patterns that do not occur in RLL(1,7) modulation code.
2. The irregularity of the Resync patterns is easily detectable.
3. There are two unique patterns, one for odd numbered Resync fields, and another for even numbered Resync fields.
4. The length of the Resync pattern shall be 24 Channel bits.

J.2 Resync pattern

Selection of one of the two Resync patterns shown below shall be made in order to provide additional Data field synchronization information.

The criteria for selecting either Resync Pattern 1 or Resync Pattern 2 is based on the position of the Resync fields within the data area.

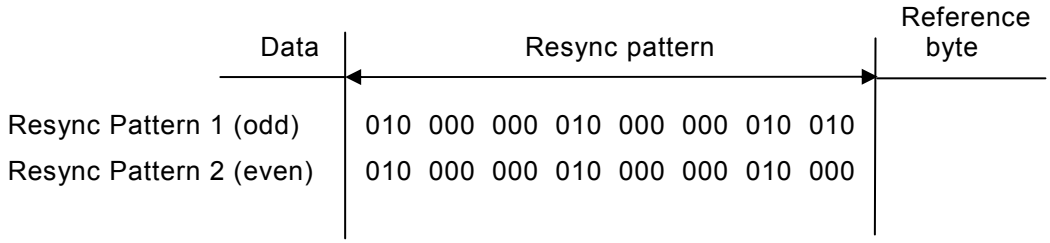

Resync Pattern 1 shall be used for all odd numbered Resync fields (RS1, RS3, RS5, …).

Resync Pattern 2 shall be used for all even numbered Resync fields (RS2, RS4, RS6, …).

J.3 Conditions of Reference pattern

The Reference pattern shall have the following characteristics to satisfy its required function:

1. The Reference pattern is a Channel bit pattern consisting of either a 3T mark, 3Tspace, 3T mark or a 3T space, 3T mark, 3T space. The triple 3T patterns can be used for determining the read signal amplitude of 3T marks and spaces as a reference level for decoding of RLL(1,7) information.
2. The read signal amplitude and shape of the reference pattern can be checked and used to locate possible data error positions for erasure ECC processing.
3. The length of the Reference pattern shall be 12 Channel bits.

--`,,```,,,,````-`-`,,`,,`,`,,`---

© ISO/IEC 2006 – All rights reserved
Copyright International Organization for Standardization
Provided by IHS under license with ISO
No reproduction or networking permitted without license from IHS
Not for Resale

J.4 Reference pattern

The Reference pattern shall be as follows.

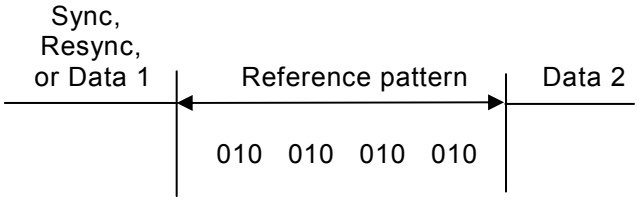

© ISO/IEC 2006 – All rights reserved

Copyright International Organization for Standardization
Provided by IHS under license with ISO
No reproduction or networking permitted without license from IHS
Not for Resale

Annex K
(normative)

Specific Disk Information

SDI sectors shall consist of 8 192 bytes that contain Specific Disk Information. These bytes shall specify the following.

Bytes 0 and 1

These bytes shall be recorded with the SDI Identifier. Both bytes shall be recorded with (D1) to indicate that this is a SDI sector.

Bytes 2 to 6

These five bytes shall contain the Disk Serial Number and Disk Side (A or B) (see table K.1). The Disk Serial Number shall be the same for both the A and B sides of the disk. The serial number and side of the disk shall be represented in hexadecimal notation.

Table K.1 — Disk Serial Number and Disk Side bytes

Byte	Bits	Description	Allowed values
2	7 – 4	1st digit of Disk Serial Number	(0) – (F)
2	3 – 0	2nd digit of Disk Serial Number	(0) – (F)
3	7 – 4	3rd digit of Disk Serial Number	(0) – (F)
3	3 – 0	4th digit of Disk Serial Number	(0) – (F)
4	7 – 4	5th digit of Disk Serial Number	(0) – (F)
4	3 – 0	6th digit of Disk Serial Number	(0) – (F)
5	7 – 4	7th digit of Disk Serial Number	(0) – (F)
5	3 – 0	8th digit of Disk Serial Number	(0) – (F)
6	7 – 4	9th digit of Disk Serial Number	(0) – (F)
6	3 – 0	Disk Side	(A) or (B)

Byte 7

This byte shall specify the SDI Revision number. The SDI Revision number may be used by the disk manufacturer to denote the use of the Unspecified SDI bytes.

Bytes 8 to 15

These eight bytes shall contain the disk manufacturer code in ASCII representation.

Byte 16

This byte shall specify the year of disk manufacture. It shall be specified as a number *n* such that

n = *year* – 2000.

© ISO/IEC 2006 – All rights reserved
Copyright International Organization for Standardization
Provided by IHS under license with ISO
No reproduction or networking permitted without license from IHS
Not for Resale

Byte 17

This byte shall specify the month of disk manufacture. This byte shall be recorded with a value in the range from 1 (January) to 12 (December).

Byte 18

This byte shall specify the day of disk manufacture. This byte shall be recorded with a value in the range from 1 to 31.

Bytes 19 to 22

These four bytes shall contain the Drive Serial Number (DSN) of the unit that recorded the SDI sectors. The serial number of the drive shall be represented in binary notation. Byte 19 shall contain the MSB and Byte 22 shall contain the LSB.

Byte 23

This byte shall specify the Media Type. This byte shall be recorded with

0 for Type RW,

1 for Type WORM.

Bytes 24 and 25

These bytes shall specify the user data capacity of the ODC in Gbytes. The capacity of the ODC shall be represented in binary notation. Byte 24 shall contain the MSB and Byte 25 shall contain the LSB.

These bytes shall be set to (001E) indicating a user data capacity of 30 Gbytes per cartridge.

Byte 26

This byte shall specify the sector size in user data bytes. This byte shall be recorded with a number *n* such that

n = *sector size* / 1024.

It shall be set to 8 indicating a sector size of 8 192 user data bytes per sector.

Byte 27

This byte shall specify the Recording Track pitch in nm. This byte shall be recorded with a number *n* such that

n = *track pitch* / 5.

It shall be set to 80 for Type RW media indicating a Recording Track pitch of 400 nm.

It shall be set to 74 for Type WORM media indicating a Recording Track pitch of 370 nm.

Byte 28

This byte shall specify the nominal wavelength λ of the laser in nm. This byte shall be recorded with a number *n* such that

n = *λ* / 5.

It shall be set to 81 indicating a laser wavelength of λ = 405 nm.

© ISO/IEC 2006 – All rights reserved

Copyright International Organization for Standardization
Provided by IHS under license with ISO
No reproduction or networking permitted without license from IHS
Not for Resale

Byte 29

This byte shall specify the nominal Numerical Aperture NA of the objective lens. This byte shall be recorded with a number *n* such that

$n = NA \times 100$.

It shall be set to 70 indicating an objective lens with NA = 0,70.

Bytes 30 and 31

These bytes shall specify the nominal cover layer index of refraction. These bytes shall be recorded with a number *n* such that

$n = \textit{index of refraction} \times 10\,000$.

Byte 30 shall contain the MSB and Byte 31 shall contain the LSB of the number *n*.

Byte 32

This byte shall indicate the nominal cover layer thickness in nm.

Byte 33

This byte shall indicate the average cover layer thickness in nm at disk radius r = 62 mm.

Byte 34

This byte shall indicate the average cover layer thickness in nm at disk radius r = 45 mm.

Byte 35

This byte shall indicate the average cover layer thickness in nm at disk radius r = 28 mm.

Byte 36

This byte shall specify the nominal disk rotational frequency in Hz. This byte shall be recorded with a number *n* such that

$n = \textit{rotational frequency} \times 4$.

It shall be set to 130 for Type RW media indicating a disk rotational frequency of 32,5 Hz.

It shall be set to 140 for Type WORM media indicating a disk rotational frequency of 35,0 Hz.

Byte 37

This byte shall specify the nominal laser read power in µW. This byte shall be recorded with a number *n* such that

$n = \textit{read power} / 5$.

It shall be set to 100 indicating a laser read power of 500 µW.

Byte 38

This byte shall specify the maximum laser read power in µW. This byte shall be recorded with a number *n* such that

$n = \textit{maximum read power} / 5$.

© ISO/IEC 2006 – All rights reserved
Copyright International Organization for Standardization
Provided by IHS under license with ISO
No reproduction or networking permitted without license from IHS
Not for Resale

This value shall be the recommendation of the media manufacturer for maximum laser read power at any radius of the disk.

Byte 39

This byte shall specify the baseline reflectance R of the disk in its unrecorded initialized state as measured in a Mirror Area. This byte shall be recorded with a number *n* such that

$n = R \times 100$.

Byte 40

This byte shall specify the change in reflectance R for user written marks. This byte shall be recorded with

(00) for $R_{mark} > R_{space}$

(FF) for $R_{mark} < R_{space}$

Byte 41

This byte shall specify the maximum linear velocity for writing in m/s. This byte shall be recorded with a number *n* such that

$n = \textit{maximum linear velocity} \times 10$.

Bytes 42 to 44

These bytes shall specify which bands of the disk can be recorded with a single pass write. This information shall be contained in a bit map where

0 Indicates band may be recorded in a single pass write.

1 Indicates band requires an erase pass prior to writing.

Byte 42

Bit 7	ZERO
Bit 6	ZERO
Bit 5	ZERO
Bit 4	ZERO
Bit 3	ZERO
Bit 2	ZERO
Bit 1	ZERO
Bit 0	Band 16

Byte 43

Bit 7	Band 15
Bit 6	Band 14
Bit 5	Band 13
Bit 4	Band 12
Bit 3	Band 11
Bit 2	Band 10
Bit 1	Band 9
Bit 0	Band 8

© ISO/IEC 2006 – All rights reserved

Copyright International Organization for Standardization
Provided by IHS under license with ISO
No reproduction or networking permitted without license from IHS
Not for Resale

Byte 44

Bit 7	Band 7
Bit 6	Band 6
Bit 5	Band 5
Bit 4	Band 4
Bit 3	Band 3
Bit 2	Band 2
Bit 1	Band 1
Bit 0	Band 0

For Type WORM media, bytes 42 to 44 shall be recorded with (00).

Byte 45

This byte shall specify the QWML position offset in nm. This byte shall be a signed value (- 128 to 127) denoting the physical offset of the QWML fields with respect to the midpoint of the groove centrelines in the radial direction. A positive value indicates that the QWML fields are positioned too close to the outer diameter of the disk.

Bytes 46

This byte shall specify the Write Power Calibration Optimal Power Factor ρ, defined as the ratio:

$$\rho = \frac{\text{Optimal Write Power}}{\text{Threshold Write Power}}$$

This byte shall be recorded with a number *n* such that

$n = \rho \times 100$.

The Write Power Calibration Optimal Power Factor could be measured in the Write Power Calibration Zone using the 8T – 8T test pattern (see 17.3).

Bytes 47 to 127

These bytes are Reserved and shall be recorded with (00).

Bytes 128 to 2 647 - Parameter Pages

Bytes 128 to 2 647 are specifying Parameter Pages.

A Parameter Page shall be 24 bytes in length and shall specify a single Write Strategy parameter (see 23.3) for 24 bands.

For Type RW media, the first 17 bytes of the Parameter Page shall specify the parameter value for Band 0 through 16. The last 7 bytes shall be reserved and recorded with (00).

For Type WORM media, the first 16 bytes of the Parameter Page shall specify the parameter value for Band 0 through 15. The last 8 bytes shall be reserved and recorded with (00).

Page Offset 0	Parameter byte value for Band 0
Page Offset 1	Parameter byte value for Band 1
Page Offset 2	Parameter byte value for Band 2
Page Offset 3	Parameter byte value for Band 3
Page Offset 4	Parameter byte value for Band 4
Page Offset 5	Parameter byte value for Band 5
Page Offset 6	Parameter byte value for Band 6
Page Offset 7	Parameter byte value for Band 7
Page Offset 8	Parameter byte value for Band 8
Page Offset 9	Parameter byte value for Band 9

© ISO/IEC 2006 – All rights reserved
Copyright International Organization for Standardization
Provided by IHS under license with ISO
No reproduction or networking permitted without license from IHS
Not for Resale

Page Offset 10	Parameter byte value for Band 10
Page Offset 11	Parameter byte value for Band 11
Page Offset 12	Parameter byte value for Band 12
Page Offset 13	Parameter byte value for Band 13
Page Offset 14	Parameter byte value for Band 14
Page Offset 15	Parameter byte value for Band 15
Page Offset 16	Parameter byte value for Band 16 for RW / Reserved = (00) for WORM
Page Offset 17 to 23	Reserved = (00)

Bytes 128 to 151

This Parameter Page shall specify the nominal first pulse write power on Groove Recording Tracks $P_{FW\text{-}G}$ in mW. Each byte shall be recorded with a number *n* such that

$n = P_{FW\text{-}G} \times 10$.

Bytes 152 to 175

This Parameter Page shall specify the nominal first pulse write power on Land Recording Tracks $P_{FW\text{-}L}$ in mW. Each byte shall be recorded with a number *n* such that

$n = P_{FW\text{-}L} \times 10$.

Bytes 176 to 199

This Parameter Page shall specify the multi-pulse to first pulse write power ratio on Groove Recording Tracks $P_{MW\text{-}G}$ / $P_{FW\text{-}G}$. Each byte shall be recorded with a number *n* such that

$n = (P_{MW\text{-}G} / P_{FW\text{-}G}) \times 100$.

Bytes 200 to 223

This Parameter Page shall specify the multi-pulse to first pulse write power ratio on Land Recording Tracks ($P_{MW\text{-}L}$ / $P_{FW\text{-}L}$). Each byte shall be recorded with a number *n* such that

$n = (P_{MW\text{-}L} / P_{FW\text{-}L}) \times 100$.

Bytes 224 to 247

This Parameter Page shall specify the last pulse to first pulse write power ratio on Groove Recording Tracks ($P_{LW\text{-}G}$ / $P_{FW\text{-}G}$). Each byte shall be recorded with a number *n* such that

$n = (P_{LW\text{-}G} / P_{FW\text{-}G}) \times 100$.

Bytes 248 to 271

This Parameter Page shall specify the last pulse to first pulse write power ratio on Land Recording Tracks ($P_{LW\text{-}L}$ / $P_{FW\text{-}L}$). Each byte shall be recorded with a number *n* such that

$n = (P_{LW\text{-}L} / P_{FW\text{-}L}) \times 100$.

Bytes 272 to 295

This Parameter Page shall specify the erase to first pulse write power ratio on Groove Recording Tracks ($P_{ER\text{-}G}$ / $P_{FW\text{-}G}$). Each byte shall be recorded with a number *n* such that

$n = (P_{ER\text{-}G} / P_{FW\text{-}G}) \times 100$.

© ISO/IEC 2006 – All rights reserved

Copyright International Organization for Standardization
Provided by IHS under license with ISO
No reproduction or networking permitted without license from IHS
Not for Resale

For Type WORM media, each byte is typically set to ($P_{B\text{-}G}$ / $P_{FW\text{-}G}$) × 100 to apply the bias power during the recording of spaces.

Bytes 296 to 319

This Parameter Page shall specify the erase to first pulse write power ratio on Land Recording Tracks ($P_{ER\text{-}L}$ / $P_{FW\text{-}L}$). Each byte shall be recorded with a number *n* such that

$n = (P_{ER\text{-}L} / P_{FW\text{-}L}) \times 100$.

For Type WORM media, each byte is typically set to ($P_{B\text{-}L}$ / $P_{FW\text{-}L}$) × 100 to apply the bias power during the recording of spaces.

Bytes 320 to 343

This Parameter Page shall specify the cooling pulse to first pulse write power ratio on Groove Recording Tracks ($P_{CL\text{-}G}$ / $P_{FW\text{-}G}$). Each byte shall be recorded with a number *n* such that

$n = (P_{CL\text{-}G} / P_{FW\text{-}G}) \times 100$.

Bytes 344 to 367

This Parameter Page shall specify the cooling pulse to first pulse write power ratio on Land Recording Tracks ($P_{CL\text{-}L}$ / $P_{FW\text{-}L}$). Each byte shall be recorded with a number *n* such that

$n = (P_{CL\text{-}L} / P_{FW\text{-}L}) \times 100$.

Bytes 368 to 391

This Parameter Page shall specify the bias pulse to first pulse write power ratio on Groove Recording Tracks ($P_{B\text{-}G}$ / $P_{FW\text{-}G}$). Each byte shall be recorded with a number *n* such that

$n = (P_{B\text{-}G} / P_{FW\text{-}G}) \times 100$.

Bytes 392 to 415

This Parameter Page shall specify the bias pulse to first pulse write power ratio on Land Recording Tracks ($P_{B\text{-}L}$ / $P_{FW\text{-}L}$). Each byte shall be recorded with a number *n* such that

$n = (P_{B\text{-}L} / P_{FW\text{-}L}) \times 100$.

Bytes 416 to 2 647 shall specify the write pulse timing strategy.

The contents of the different time delay parameters specified by these bytes are given in table K.2 (see also Annex O).

The value contained in each of these bytes shall represent a time delay δT expressed as a sum of an integer numbers *m* of Channel Clock period T and an integer number *n* of units of 1/40 of the Channel Clock period T:

$\delta T = mT + n(T/40)$.

The value of *m* and *n* shall be assigned to each byte using the following bit fields:

Bit 7-6 shall represent the value *m* (0 to 3).

Bit 5-0 shall represent the value *n* (0 to 39).

© ISO/IEC 2006 – All rights reserved
Copyright International Organization for Standardization
Provided by IHS under license with ISO
No reproduction or networking permitted without license from IHS
Not for Resale

Bit 7 shall be the most significant bit of value *m*.

Bit 5 shall be the most significant bit of value *n*.

Table K.2 — Contents of the time delay parameters used in the write pulse strategy

Parameter	Content
T_{SFP}	Time delay of Start First Pulse: This time defines the start location of the first write pulse of a mark. It starts 1T before the space-mark transition of the NRZ signal. It is depending on the space-mark lengths. The power level selected at the end of this time is P_{FW}.
T_{EFP}	Time delay of End First Pulse: This time defines the end location of the first write pulse of a mark. It starts 1T before the space-mark transition of the NRZ signal. It is depending on the space-mark lengths. The power level selected at the end of this time is P_{CL} for 2T marks and P_B for marks longer than 2T.
T_{X1}	Time delay of Extra One: This time defines the start location of the second pulse of a write sequence (for mark at least 4T long). It starts 1T after the space-mark transition of the NRZ signal. The power level selected at the end of this time is P_{MP}.
T_{X3}	Time delay of Extra Three: This time defines the end location of the second pulse of a write sequence (for mark at least 4T long). It starts 1T after the space-mark transition of the NRZ signal. The power level selected at the end of this time is P_B.
T_{SMP}	Time delay of Start Multi-Pulse: This time defines the start location of the third or more inner write pulse of a mark (for mark at least 5T long). It starts at every middle T of a long mark (at 2T, 3T, 4T, . . . after the space-mark transition). The power level selected at the end of this time is P_{MP}.
T_{X2}	Time delay of Extra Two: This time defines the end location of the third write pulse of a mark (for mark at least 5T long). It starts 2T after the space-mark transition of the NRZ signal. The power level selected at the end of this time is $P_{B.}$
T_{EMP}	Time delay of End Multi Pulse. This time defines the end location of the third or more inner write pulse started by T_{SMP} (for mark at least 6T long). It starts at every middle T of a long mark (at 3T, 4T, 5T, . . . after the space-mark transition). The power level selected at the end of this time is P_b.
T_{EMPP}	Time delay of End Multi Pulse Programmable. This time defines the end location of the last inner write pulse started by T_{SMP} (for mark at least 4T long). It starts 3T before the mark-space transition of the NRZ signal. It is depending on the mark-space lengths. The power level selected at the end of this time is P_B.
T_{SLP}	Time delay of Start Last Pulse. This time defines the start location of the last write pulse of a mark (for mark at least 3T long). It starts 2T before the mark-space transition of the NRZ signal. The power level selected at the end of this time is P_{LW}.
T_{ELP}	Time delay of End Last Pulse: This time defines the end location of the last write pulse of a mark (for mark at least 3T long). It starts 2T before the mark-space transition of the NRZ signal. It is depending on the mark-space lengths. The power level selected at the end of this time is the final cooling power following a mark, P_{CL}.
T_{ECP}	Time delay of End Cooling Pulse. This time defines the end location of the final cooling pulse, and starts the erase power of the space region. It starts 1T before the mark-space transition. It is depending on the mark-space lengths. The power level selected at the end of this time is P_{ER}.

© ISO/IEC 2006 All rights reserved

Copyright International Organization for Standardization
Provided by IHS under license with ISO
No reproduction or networking permitted without license from IHS
Not for Resale

Bytes 416 to 439

This Parameter Page shall specify the start multi-pulse delay T_{SMP}.

Bytes 440 to 463

This Parameter Page shall specify the end multi-pulse delay T_{EMP}.

Bytes 464 to 487

This Parameter Page shall specify the start extra 1 pulse delay T_{X1}.

Bytes 488 to 511

This Parameter Page shall specify the end extra 2 pulse delay T_{X2}.

Bytes 512 to 535

This Parameter Page shall specify the end extra 3 pulse delay T_{X3}.

Bytes 536 to 559

This Parameter Page shall specify the end multi-pulse programmable delay of a 4T mark followed by a 2T space T_{EMPP} (4M-2S).

Bytes 560 to 583

This Parameter Page shall specify the end multi-pulse programmable delay of a 4T mark followed by a 3T space T_{EMPP} (4M-3S).

Bytes 584 to 607

This Parameter Page shall specify the end multi-pulse programmable delay of a 4T mark followed by a 4T space T_{EMPP} (4M-4S).

Bytes 608 to 631

This Parameter Page shall specify the end multi-pulse programmable delay of a 4T mark followed by a 5T or longer space T_{EMPP} (4M-5S).

Bytes 632 to 655

This Parameter Page shall specify the end multi-pulse programmable delay of a 5T or longer mark followed by a 2T space T_{EMPP} (5M-2S).

Bytes 656 to 679

This Parameter Page shall specify the end multi-pulse programmable delay of a 5T or longer mark followed by a 3T space T_{EMPP} (5M-3S).

Bytes 680 to 703

This Parameter Page shall specify the end multi-pulse programmable delay of a 5T or longer mark followed by a 4T space T_{EMPP} (5M-4S).

Bytes 704 to 727

This Parameter Page shall specify the end multi-pulse programmable delay of a 5T or longer mark followed by a 5T or longer space T_{EMPP} (5M-5S).

© ISO/IEC 2006 – All rights reserved
Copyright International Organization for Standardization
Provided by IHS under license with ISO
No reproduction or networking permitted without license from IHS
Not for Resale

Bytes 728 to 751

This Parameter Page shall specify the end cooling pulse delay of a 2T mark followed by a 2T space T_{ECP} (2M-2S).

Bytes 752 to 775

This Parameter Page shall specify the end cooling pulse delay of a 2T mark followed by a 3T space T_{ECP} (2M-3S).

Bytes 776 to 799

This Parameter Page shall specify the end cooling pulse delay of a 2T mark followed by a 4T space T_{ECP} (2M-4S).

Bytes 800 to 823

This Parameter Page shall specify the end cooling pulse delay of a 2T mark followed by a 5T or longer space T_{ECP} (2M-5S).

Bytes 824 to 847

This Parameter Page shall specify the end cooling pulse delay of a 3T mark followed by a 2T space T_{ECP} (3M-2S).

Bytes 848 to 871

This Parameter Page shall specify the end cooling pulse delay of a 3T mark followed by a 3T space T_{ECP} (3M-3S).

Bytes 872 to 895

This Parameter Page shall specify the end cooling pulse delay of a 3T mark followed by a 4T space T_{ECP} (3M-4S).

Bytes 896 to 919

This Parameter Page shall specify the end cooling pulse delay of a 3T mark followed by a 5T or longer space T_{ECP} (3M-5S).

Bytes 920 to 943

This Parameter Page shall specify the end cooling pulse delay of a 4T mark followed by a 2T space T_{ECP} (4M-2S).

Bytes 944 to 967

This Parameter Page shall specify the end cooling pulse delay of a 4T mark followed by a 3T space T_{ECP} (4M-3S).

Bytes 968 to 991

This Parameter Page shall specify the end cooling pulse delay of a 4T mark followed by a 4T space T_{ECP} (4M-4S).

--`,,```,,,,````-`-`,,`,,`,`,,`---
© ISO/IEC 2006 – All rights reserved

Copyright International Organization for Standardization
Provided by IHS under license with ISO
No reproduction or networking permitted without license from IHS
Not for Resale

Bytes 992 to 1 015

This Parameter Page shall specify the end cooling pulse delay of a 4T mark followed by a 5T or longer space T_{ECP} (4M-5S).

Bytes 1 016 to 1 039

This Parameter Page shall specify the end cooling pulse delay of a 5T or longer mark followed by a 2T space T_{ECP} (5M-2S).

Bytes 1 040 to 1 063

This Parameter Page shall specify the end cooling pulse delay of a 5T or longer mark followed by a 3T space T_{ECP} (5M-3S).

Bytes 1 064 to 1 087

This Parameter Page shall specify the end cooling pulse delay of a 5T or longer mark followed by a 4T space T_{ECP} (5M-4S).

Bytes 1 088 to 1 111

This Parameter Page shall specify the end cooling pulse delay of a 5T or longer mark followed by a 5T or longer space T_{ECP} (5M-5S).

Bytes 1 112 to 1 135

This Parameter Page shall specify the end last pulse delay of a 2T mark followed by a 2T space T_{ELP} (2M-2S).

Bytes 1 136 to 1 159

This Parameter Page shall specify the end last pulse delay of a 2T mark followed by a 3T space T_{ELP} (2M-3S).

Bytes 1 160 to 1 183

This Parameter Page shall specify the end last pulse delay of a 2T mark followed by a 4T space T_{ELP} (2M-4S).

Bytes 1 184 to 1 207

This Parameter Page shall specify the end last pulse delay of a 2T mark followed by a 5T or longer space T_{ELP} (2M-5S).

Bytes 1 208 to 1 231

This Parameter Page shall specify the end last pulse delay of a 3T mark followed by a 2T space T_{ELP} (3M-2S).

Bytes 1 232 to 1 255

This Parameter Page shall specify the end last pulse delay of a 3T mark followed by a 3T space T_{ELP} (3M-3S).

Bytes 1 256 to 1 279

This Parameter Page shall specify the end last pulse delay of a 3T mark followed by a 4T space T_{ELP} (3M-4S).

Bytes 1 280 to 1 303

This Parameter Page shall specify the end last pulse delay of a 3T mark followed by a 5T or longer space T_{ELP} (3M-5S).

© ISO/IEC 2006 – All rights reserved
Copyright International Organization for Standardization
Provided by IHS under license with ISO
No reproduction or networking permitted without license from IHS
Not for Resale

Bytes 1 304 to 1 327

This Parameter Page shall specify the end last pulse delay of a 4T mark followed by a 2T space T_{ELP} (4M-2S).

Bytes 1 328 to 1 351

This Parameter Page shall specify the end last pulse delay of a 4T mark followed by a 3T space T_{ELP} (4M-3S).

Bytes 1 352 to 1 375

This Parameter Page shall specify the end last pulse delay of a 4T mark followed by a 4T space T_{ELP} (4M-4S).

Bytes 1 376 to 1 399

This Parameter Page shall specify the end last pulse delay of a 4T mark followed by a 5T or longer space T_{ELP} (4M-5S).

Bytes 1 400 to 1 423

This Parameter Page shall specify the end last pulse delay of a 5T or longer mark followed by a 2T space T_{ELP} (5M-2S).

Bytes 1 424 to 1 447

This Parameter Page shall specify the end last pulse delay of a 5T or longer mark followed by a 3T space T_{ELP} (5M-3S).

Bytes 1 448 to 1 471

This Parameter Page shall specify the end last pulse delay of a 5T or longer mark followed by a 4T space T_{ELP} (5M-4S).

Bytes 1 472 to 1 495

This Parameter Page shall specify the end last pulse delay of a 5T or longer mark followed by a 5T or longer space T_{ELP} (5M-5S).

Bytes 1 496 to 1 519

This Parameter Page shall specify the start last pulse delay of a 2T mark followed by a 2T space T_{SLP} (2M-2S).

Bytes 1 520 to 1 543

This Parameter Page shall specify the start last pulse delay of a 2T mark followed by a 3T space T_{SLP} (2M-3S).

Bytes 1 544 to 1 567

This Parameter Page shall specify the start last pulse delay of a 2T mark followed by a 4T space T_{SLP} (2M-4S).

Bytes 1 568 to 1 591

This Parameter Page shall specify the start last pulse delay of a 2T mark followed by a 5T or longer space T_{SLP} (2M-5S).

--`,,```,,,,````-`-`,,`,,`,`,,`---

© ISO/IEC 2006 – All rights reserved

Copyright International Organization for Standardization
Provided by IHS under license with ISO
No reproduction or networking permitted without license from IHS
Not for Resale

Bytes 1 592 to 1 615

This Parameter Page shall specify the start last pulse delay of a 3T mark followed by a 2T space T_{SLP} (3M-2S).

Bytes 1 616 to 1 639

This Parameter Page shall specify the start last pulse delay of a 3T mark followed by a 3T space T_{SLP} (3M-3S).

Bytes 1 640 to 1 663

This Parameter Page shall specify the start last pulse delay of a 3T mark followed by a 4T space T_{SLP} (3M-4S).

Bytes 1 664 to 1 687

This Parameter Page shall specify the start last pulse delay of a 3T mark followed by a 5T or longer space T_{SLP} (3M-5S).

Bytes 1 688 to 1 711

This Parameter Page shall specify the start last pulse delay of a 4T mark followed by a 2T space T_{SLP} (4M-2S).

Bytes 1 712 to 1 735

This Parameter Page shall specify the start last pulse delay of a 4T mark followed by a 3T space T_{SLP} (4M-3S).

Bytes 1 736 to 1 759

This Parameter Page shall specify the start last pulse delay of a 4T mark followed by a 4T space T_{SLP} (4M-4S).

Bytes 1 760 to 1 783

This Parameter Page shall specify the start last pulse delay of a 4T mark followed by a 5T or longer space T_{SLP} (4M-5S).

Bytes 1 784 to 1 807

This Parameter Page shall specify the start last pulse delay of a 5T or longer mark followed by a 2T space T_{SLP} (5M-2S).

Bytes 1 808 to 1 831

This Parameter Page shall specify the start last pulse delay of a 5T or longer mark followed by a 3T space T_{SLP} (5M-3S).

Bytes 1 832 to 1 855

This Parameter Page shall specify the start last pulse delay of a 5T or longer mark followed by a 4T space T_{SLP} (5M-4S).

© ISO/IEC 2006 – All rights reserved
Copyright International Organization for Standardization
Provided by IHS under license with ISO
No reproduction or networking permitted without license from IHS
Not for Resale

Bytes 1 856 to 1 879

This Parameter Page shall specify the start last pulse delay of a 5T or longer mark followed by a 5T or longer space T_{SLP} (5M-5S).

Bytes 1 880 to 1 903

This Parameter Page shall specify the end first pulse delay of a 2T mark following a 2T space T_{EFP} (2S-2M).

Bytes 1 904 to 1 927

This Parameter Page shall specify the end first pulse delay of a 3T mark following a 2T space T_{EFP} (2S-3M).

Bytes 1 928 to 1 951

This Parameter Page shall specify the end first pulse delay of a 4T mark following a 2T space T_{EFP} (2S-4M).

Bytes 1 952 to 1 975

This Parameter Page shall specify the end first pulse delay of a 5T or longer mark following a 2T space T_{EFP} (2S-5M).

Bytes 1 976 to 1999

This Parameter Page shall specify the end first pulse delay of a 2T mark following a 3T space T_{EFP} (3S-2M).

Bytes 2 000 to 2 023

This Parameter Page shall specify the end first pulse delay of a 3T mark following a 3T space T_{EFP} (3S-3M).

Bytes 2 024 to 2 047

This Parameter Page shall specify the end first pulse delay of a 4T mark following a 3T space T_{EFP} (3S-4M).

Bytes 2 048 to 2 071

This Parameter Page shall specify the end first pulse delay of a 5T or longer mark following a 3T space T_{EFP} (3S-5M).

Byte 2 072 to 2 095

This Parameter Page shall specify the end first pulse delay of a 2T mark following a 4T space T_{EFP} (4S-2M).

Bytes 2 096 to 2 119

This Parameter Page shall specify the end first pulse delay of a 3T mark following a 4T space T_{EFP} (4S-3M).

Bytes 2 120 to 2 143

This Parameter Page shall specify the end first pulse delay of a 4T mark following a 4T space T_{EFP} (4S-4M).

Bytes 2 144 to 2 167

This Parameter Page shall specify the end first pulse delay of a 5T or longer mark following a 4T space T_{EFP} (4S-5M).

© ISO/IEC 2006 – All rights reserved

Copyright International Organization for Standardization
Provided by IHS under license with ISO
No reproduction or networking permitted without license from IHS
Not for Resale

Bytes 2 168 to 2 191

This Parameter Page shall specify the end first pulse delay of a 2T mark following a 5T or longer space T_{EFP} (5S-2M).

Bytes 2 192 to 2 215

This Parameter Page shall specify the end first pulse delay of a 3T mark following a 5T or longer space T_{EFP} (5S-3M).

Bytes 2 216 to 2 239

This Parameter Page shall specify the end first pulse delay of a 4T mark following a 5T or longer space T_{EFP} (5S-4M).

Bytes 2 240 to 2 263

This Parameter Page shall specify the end first pulse delay of a 5T or longer mark following a 5T or longer space T_{EFP} (5S-5M).

Bytes 2 264 to 2 287

This Parameter Page shall specify the start first pulse delay of a 2T mark following a 2T space T_{SFP} (2S-2M).

Bytes 2 288 to 2 311

This Parameter Page shall specify the start first pulse delay of a 3T mark following a 2T space T_{SFP} (2S-3M).

Bytes 2 312 to 2 335

This Parameter Page shall specify the start first pulse delay of a 4T mark following a 2T space T_{SFP} (2S-4M).

Bytes 2 336 to 2 359

This Parameter Page shall specify the start first pulse delay of a 5T or longer mark following a 2T space T_{SFP} (2S-5M).

Bytes 2 360 to 2 383

This Parameter Page shall specify the start first pulse delay of a 2T mark following a 3T space T_{SFP} (3S-2M).

Bytes 2 384 to 2 407

This Parameter Page shall specify the start first pulse delay of a 3T mark following a 3T space T_{SFP} (3S-3M).

Bytes 2 408 to 2 431

This Parameter Page shall specify the start first pulse delay of a 4T mark following a 3T space T_{SFP} (3S-4M).

Bytes 2 432 to 2 455

This Parameter Page shall specify the start first pulse delay of a 5T or longer mark following a 3T space T_{SFP} (3S-5M).

Bytes 2 456 to 2479

This Parameter Page shall specify the start first pulse delay of a 2T mark following a 4T space T_{SFP} (4S-2M).

--`,,```,,,,````-`-`,,`,,`,`,,`---

© ISO/IEC 2006 – All rights reserved
Copyright International Organization for Standardization
Provided by IHS under license with ISO
No reproduction or networking permitted without license from IHS
Not for Resale

Bytes 2 480 to 2503

This Parameter Page shall specify the start first pulse delay of a 3T mark following a 4T space T_{SFP} (4S-3M).

Bytes 2 504 to 2527

This Parameter Page shall specify the start first pulse delay of a 4T mark following a 4T space T_{SFP} (4S-4M).

Bytes 2 528 to 2551

This Parameter Page shall specify the start first pulse delay of a 5T or longer mark following a 4T space T_{SFP} (4S-5M).

Bytes 2 552 to 2575

This Parameter Page shall specify the start first pulse delay of a 2T mark following a 5T or longer space T_{SFP} (5S-2M).

Bytes 2 576 to 2599

This Parameter Page shall specify the start first pulse delay of a 3T mark following a 5T or longer space T_{SFP} (5S-3M).

Bytes 2 600 to 2623

This Parameter Page shall specify the start first pulse delay of a 4T mark following a 5T or longer space T_{SFP} (5S-4M).

Bytes 2 624 to 2647

This Parameter Page shall specify the start first pulse delay of a 5T or longer mark following a 5T or longer space T_{SFP} (5S-5M).

Bytes 2 648 to 8189

These bytes are Unspecified and shall be ignored in interchange. Media manufacturers may use these bytes at their discretion to record additional disk information.

Bytes 8190 and 8191

These bytes shall be recorded with the SDI Identifier Complement. Both bytes shall be recorded with (2E) to indicate that this is a SDI sector.

--`,,```,,,,````-`-`,,`,,`,`,,`---

© ISO/IEC 2006 – All rights reserved

Copyright International Organization for Standardization
Provided by IHS under license with ISO
No reproduction or networking permitted without license from IHS
Not for Resale

Annex L
(normative)

Read Channel for measuring analog signals and jitter

Analog signals and jitter shall be measured using the following circuit:

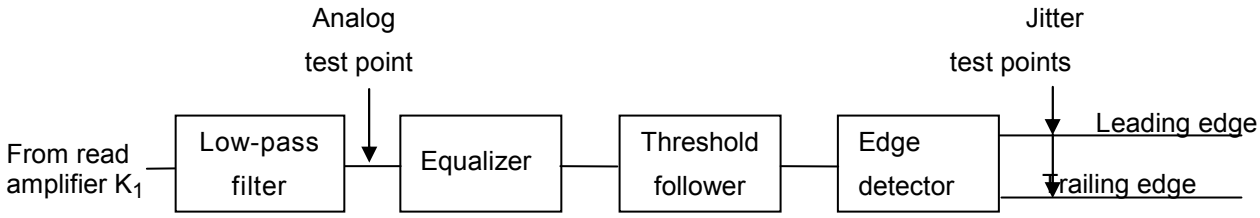

Figure L.1 — Read Channel block diagram

The amplifier K_1 (see figure L.1) shall be as specified in 9.3.

The low-pass filter shall be of the 5th Order Bessel type with a cut-off frequency equal to half the Channel clock frequency of the band being tested.

The Equalizer and Threshold Follower shall be as specified in Annex N.

© ISO/IEC 2006 – All rights reserved
Copyright International Organization for Standardization
Provided by IHS under license with ISO
No reproduction or networking permitted without license from IHS
Not for Resale

Annex M
(normative)

Timing mean and timing jitter measuring procedure

The timing mean and timing jitter of leading-to-trailing or trailing-to-leading edges shall be measured using the following procedures.

1. Set the threshold level of the detector circuit such that the 3T mark and 3T space of VFO1 are exactly 3T long.
2. Hold the threshold level, and detect the signal edges.
3. Measure the time intervals of the leading-to-trailing and trailing-to-leading edges using a Time Interval Analyzer.
4. Acquire 10^5 independent time interval samples excluding data from defective areas.
5. Calculate the mean value of the timing distribution of corresponding mark or space length L_n. This value is the timing mean Mt.
6. Calculate the standard deviation of the timing distribution of corresponding mark or space length L_n. This value is the timing jitter Jt.

Mt and Jt are shown in figure M.1.

The time intervals of leading-to-trailing or trailing-to-leading edges shall be separately examined, and the specifications shall be satisfied even in the worst case.

In the case of Header signal evaluation of Mt(H) and Jt(H), the threshold shall be set using the 4T marks and 4T spaces in the AM and the time interval samples shall be measured using the embossed ID fields.

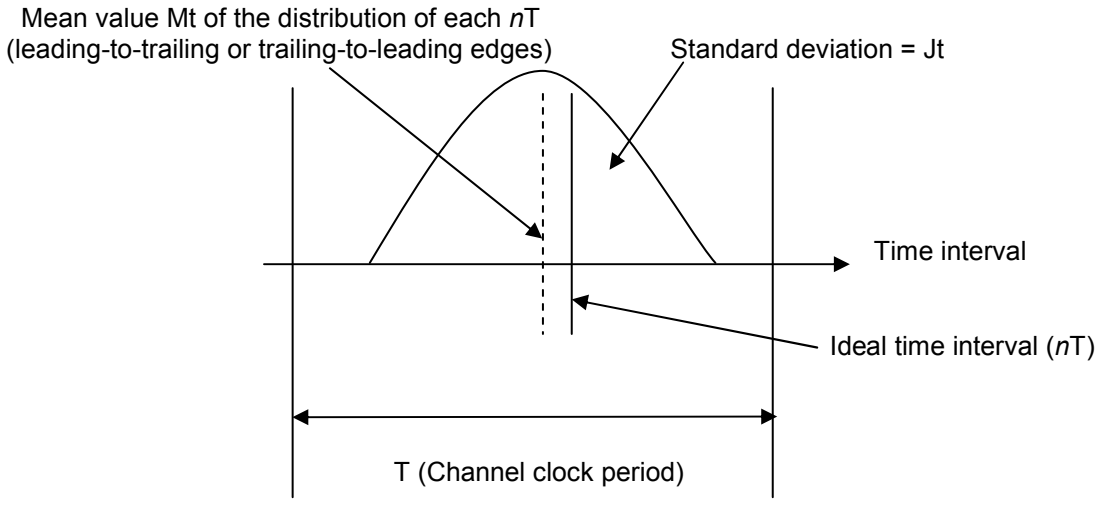

Figure M.1 — Measured distribution of timing mean and timing jitter

© ISO/IEC 2006 All rights reserved

Copyright International Organization for Standardization
Provided by IHS under license with ISO
No reproduction or networking permitted without license from IHS
Not for Resale

Annex N
(normative)

Implementation Independent Mark Quality Determination (IIMQD) for the interchange of recorded media

N.1 Test pattern

The IIMQD test uses sectors recorded with random user data patterns to test the drive's ability to form marks of the proper length for the purposes of media interchange. Random user data patterns will include all mark and space lengths from 2T to 9T in various combinations.

The following procedure shall be used to determine IIMQD for interchange of recorded media.

Write several sectors on both Groove and Land Recording Tracks with random user data in each band using the laser power write method of the drive under test.

N.2 Detection method

Read and detect the data signal with the following equalization coupled with detection method of detection given in 23.2.3. The threshold value may be varied in this test to compensate for the edge motion of the marks due to parameter variations.

The equalizer shall be a five-tap delay line filter with tap weights values p and q:

$$Eq(z) = q + p\,z^{-1} + z^{-2} + p\,z^{-3} + q\,z^{-4}$$

where

p = + 0,1875

q = - 0,2500

z^{-1} = delay of T, and

T is the Channel clock period for the zone being read.

Measure the detected signal from the written tracks in two ways using a Time Interval Analyzer:

1. the mean leading-to-trailing edge (mark) time intervals, and

2. the mean trailing-to-leading edge (space) time intervals.

N.3 Measurement process

The measurements shall be made using 10^5 independent time interval samples on several tracks at each radial location. The offset for any desired run of length n is the absolute difference of the detected signal length L_n minus n times T. Adjust the threshold level once for both measurements to minimize the worst case mark and space offset for this radial position and express it as a percentage of the channel bit time T.

© ISO/IEC 2006 – All rights reserved
Copyright International Organization for Standardization
Provided by IHS under license with ISO
No reproduction or networking permitted without license from IHS
Not for Resale

N.4 Threshold follower

The tracking threshold follower of figure N.1 (or equivalent) shall be used during certain signal measurements as defined in the specific test procedures. A tracking threshold filter is required to establish and maintain the signal base line for the data detection process. Its purpose is to compensate for local media variances in reflectivity, recording sensitivity, and for changes in signal d.c. level observed during the measurement process.

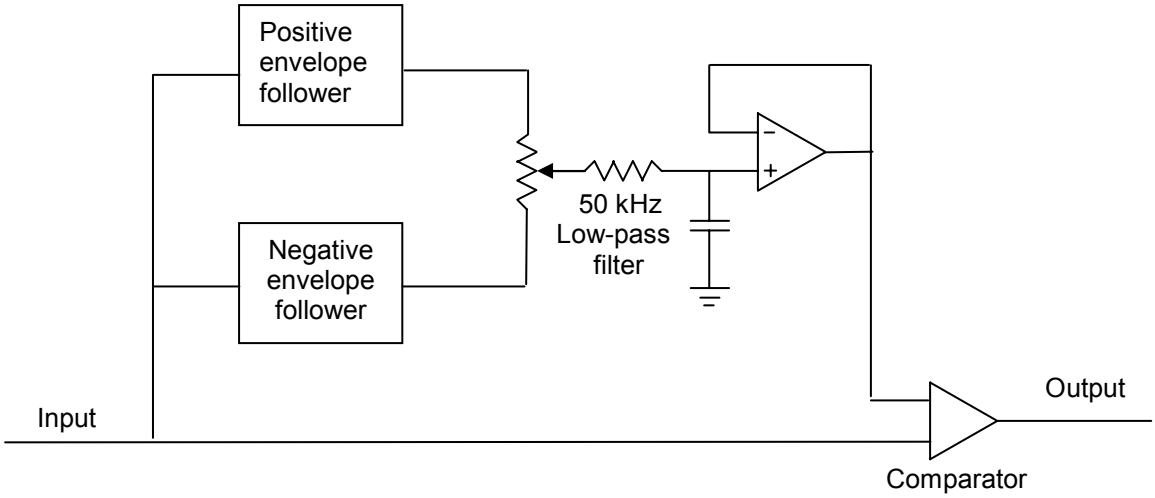

Figure N.1 — Tracking threshold filter block diagram

Copyright International Organization for Standardization
Provided by IHS under license with ISO
No reproduction or networking permitted without license from IHS
Not for Resale

Annex O
(normative)

Definition of the write pulse shape

The waveforms of the NRZ signal and the shape of the light pulse for both Type RW and Type WORM media shall be as shown in figure O.1 (see also table K.2 of Annex K).

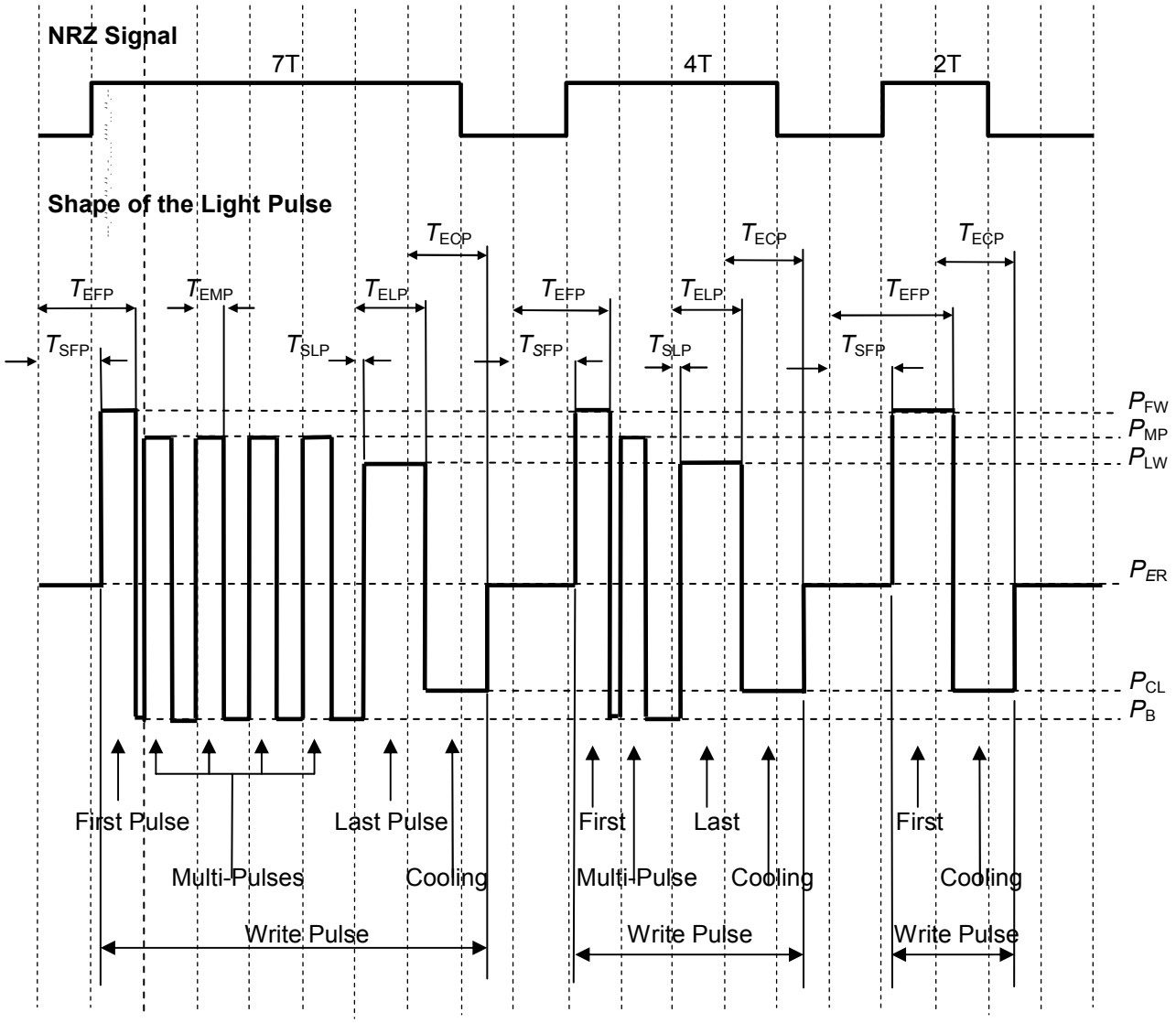

Figure O.1 — Write pulse shape definitions

The laser power levels shown are for reference and do not imply a specific ordering of pulse power. For example, P_{LW} may be higher than P_{FW}, P_{MP} may be higher than P_{FW}, P_{CL} may be lower than P_B, etc.

For Type WORM media, the erase power level P_{ER} may be set to a lower power (i.e. same as P_B).

The rise and fall times specified in 23.3.1 shall be measured as the time required to transition from the 10 % to 90 % or 90 % to 10 % points between any of the sequential optical power levels shown in figure O.1.

© ISO/IEC 2006 – All rights reserved
Copyright International Organization for Standardization
Provided by IHS under license with ISO
No reproduction or networking permitted without license from IHS
Not for Resale

Annex P
(normative)

Asymmetry measuring definition

The asymmetry of signal from user written data with *m*T and *n*T marks and spaces shall be measured based on the following definitions. See figure P.1.

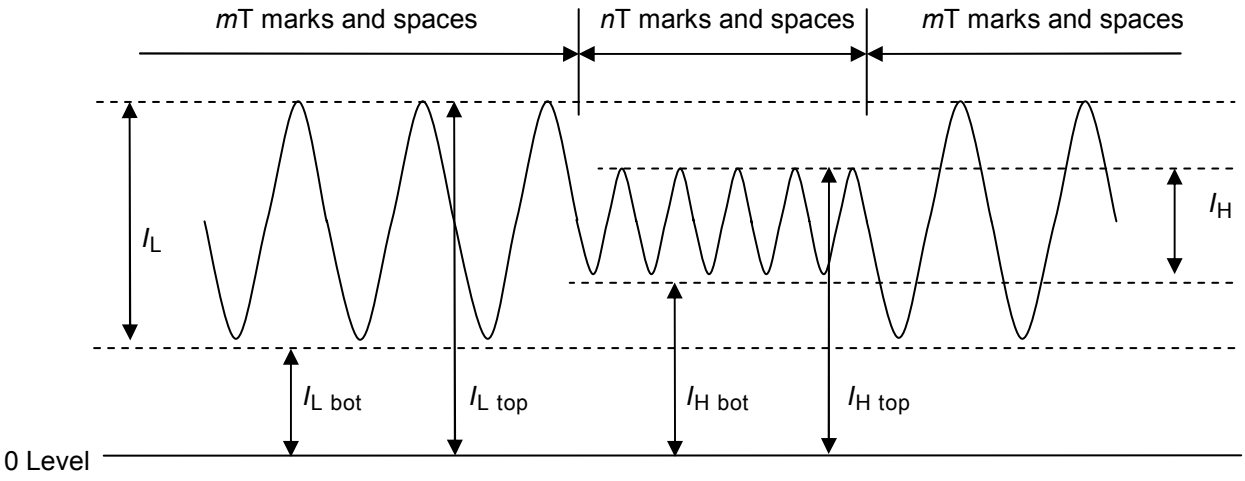

Figure P.1 — Signal from user-written data with mT and nT marks and spaces

$$\text{Asymmetry } (m\text{T-}n\text{T}) = \frac{1/2\ [(I_{L\ top} + I_{L\ bot}) - (I_{H\ top} + I_{H\ bot})]}{I_{L\ top} - I_{L\ bot}}$$

where

I_L and I_H are the peak-to-peak values of the Read Channel signals for *m*T and *n*T marks and spaces, written under any of the conditions given in 23.3, and read under the conditions specified in 23.2.

$I_{L\ top}$, $I_{H\ top}$, $I_{L\ bot}$, $I_{H\ bot}$ are the top and bottom levels of I_L and I_H.

© ISO/IEC 2006 – All rights reserved

Copyright International Organization for Standardization
Provided by IHS under license with ISO
No reproduction or networking permitted without license from IHS
Not for Resale

Annex Q
(normative)

Enhanced Selective Inter-Symbol Interference Cancellation (ESISIC) algorithm

Data detection in the User Area shall be performed for testing purposes by the combination of the threshold detection method and so-called ESISIC (Enhanced Selective Inter Symbol Interference Cancellation) method described in this Annex.

The threshold detection method is used to make a preliminary data detection decision on all data samples, but the ESISIC data detection scheme may overrule this decision.

ESISIC searches for the 2T marks and spaces in the digitized readout signal from encoded data. Those samples identified as 2T marks or spaces are then considered respectively clear logical ONE's or logical ZERO's by comparing the values of digitized sample S_n with adjacent data samples, as specified hereafter.

Each data sample S_n (see figure Q.1a) with an amplitude within the amplitude window defined by the tops and bottoms of the 3T marks and spaces in the preamble of the data sector and updated throughout the sector by the 3T tops and 3T bottoms of the Reference bytes, shall be evaluated to search for "ESISIC ONE" and "ESISIC ZERO" samples:

- Sample S_n is said an ESISIC ONE if the following conditions are met:

  $(S_n > S_{n-2}$ AND $S_n \geq S_{n+2})$ OR $(S_n \geq S_{n-2}$ AND $S_n > S_{n+2})$

- Sample S_n is said an ESISIC ZERO if the following conditions are met:

  $(S_n < S_{n-2}$ AND $S_n \leq S_{n+2})$ OR $(S_n \leq S_{n-2}$ AND $S_n < S_{n+2})$

The amplitude window's condition avoids false ESISIC detection in the noisy flat parts of long marks and spaces.

1. If 2 consecutive ESISIC ONE'S are detected then those 2 Channel-bits shall be set to ONE denoting a 2T mark. Likewise, if 2 consecutive ESISIC ZERO's are detected then those 2 Channel-bits shall be set to ZERO denoting a 2T space.

   This case is illustrated on the waveform of figure Q.1b which shows a possible worst-case situation, where the 2T space (samples C and D) is preceded by a long mark and the 2T mark (E and F) is followed by a long space, and which shows also a threshold level which in this (realistic) case is not controlled at the optimal level for the 2T waveforms.

   So in figure Q.1b, even though samples C and D are above the threshold level, they are turned into logical ZERO's by the ESISIC detection scheme. These "ESISIC ZERO's" are shown as triangles, while the "ESISIC ONE's" are shown as squares. All other samples are shown as dots.

2. If isolated ESISIC ZERO or ESISIC ONE are detected, the adjacent samples shall be further evaluated, because single 1T mark and space are illegal in the RLL(1,7) code This shall be accomplished by means of relative amplitude comparisons, independent of the slice level and independent of the absolute signal amplitude (i.e. by means of "Maximum Likelihood Detection").

   This case is illustrated on the waveform of figure Q.1c where sample D is a single ESISIC ZERO (shown as a triangle) and sample F is a single ESISIC ONE (shown as a square). This means that one of the samples C, E or G should be part of a 2T mark and one of them should be part of a 2T space. The most likely resolution is determined by the amplitude differences of (C-E) and (E-G). In this case (E-G) is much larger, which makes sample G the most likely to be correct. As it is more negative it shall be considered a logical ZERO. Note that it is also clearly below the slice level, but that information is not used here.

   Since G is now chosen to be a ZERO, E and F shall be set to ONE and C and D shall be cleared to ZERO.

© ISO/IEC 2006 – All rights reserved
Copyright International Organization for Standardization
Provided by IHS under license with ISO
No reproduction or networking permitted without license from IHS
Not for Resale

So samples C through F shall be corrected (overruled).

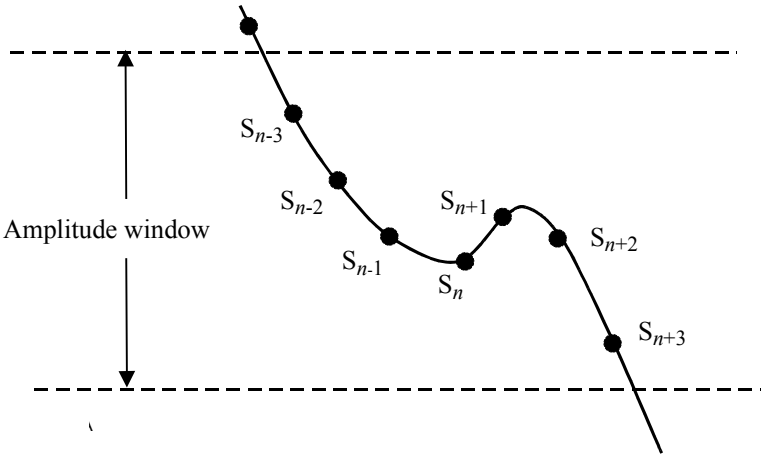

Figure Q.1a

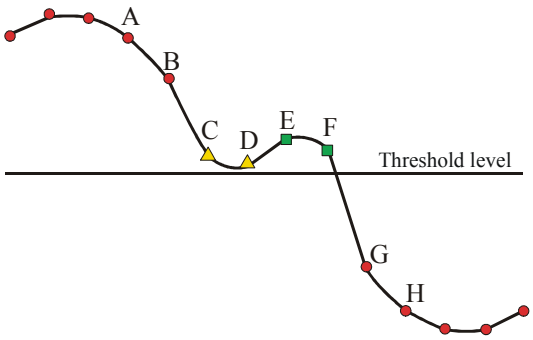

Figure Q.1b

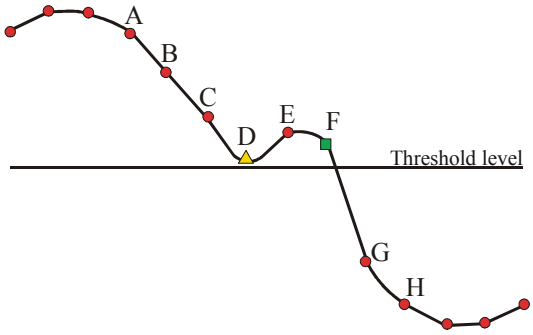

Figure Q.1c

Figure Q.1 — Example of readout waveforms and ESISIC detection

© ISO/IEC 2006 – All rights reserved
Copyright International Organization for Standardization
Provided by IHS under license with ISO
No reproduction or networking permitted without license from IHS
Not for Resale

Annex R
(normative)

Requirements for interchange

R.1 Equipment for writing

The disk under test shall have been written with arbitrary data by a disk drive for data interchange used in the operating environment.

R.2 Test equipment for reading

R.2.1 General

The read test shall be performed on a test drive in the test environment. The rotational direction and frequency of the disk when reading shall be as defined in 9.5.

R.2.2 Read Channel

R.2.2.1 Characteristics of the optical beam

The optical beam used for reading shall comply with the requirements of 9.2.

R.2.2.2 Read power

The read power shall be 500 μW ± 25 μW.

R.2.2.3 Read amplifier

The read amplifier after the photo detectors shall have a flat response from d.c. to 60 MHz within 1 dB.

R.2.2.3 Analog to binary conversion

The signals from the read amplifier shall be converted from analog to binary. The converter for the Read Channel shall work properly for signals from preformatted marks with properties as defined in clause 22.

The converter for the Read Channel shall work properly for signals from user written marks with properties as defined in clause 25.

R.2.2.4 Binary to digital conversion

The binary signal shall be converted to a digital signal according to the rules of the recording codes of clause 16. The 2T marks and 2T spaces in the recording area shall be detected using the ESISIC algorithm described in Annex Q.

R.2.3 Tracking

The open-loop transfer function for the axial and radial tracking servo shall be

© ISO/IEC 2006 – All rights reserved
Copyright International Organization for Standardization
Provided by IHS under license with ISO
No reproduction or networking permitted without license from IHS
Not for Resale

$$H_s(i\omega) = \frac{1}{c} \times \left(\frac{\omega_0}{i\omega} \right)^2 \times \frac{1 + \frac{i\omega c}{\omega_0}}{1 + \frac{i\omega}{c\omega_0}}$$

where $\omega = 2\pi f$, $\omega_0 = 2\pi f_0$, $i = \sqrt{-1}$

with an accuracy such that $|1 + H|$ shall not deviate more than ± 20 % from its nominal value in the bandwidth from 20 Hz to 20 kHz.

The constant c shall be 3. The open-loop 0 dB frequency f_0 shall be 1 700 Hz for the axial servo and 2 540 Hz for the radial servo. The open-loop d.c. gain of the axial servo shall be at least 80 dB.

R.3 Requirements for the digital read signals

A byte error is defined by a byte in which one or more bits have a wrong setting, as detected by the error detection and correction circuit.

R.3.1 Sector acceptance

Any sector accepted as valid during the writing process shall not contain byte errors after the error correction circuit.

R.3.2 Sector Defect Management

Any sector not accepted as valid during the writing process shall have been rewritten according to the rules for Defect Management.

R.4 Requirements for the digital servo signals

The focus of the optical beam shall not jump tracks unintentionally.

R.5 Requirement for interchange

An interchanged optical disk cartridge meets the requirements for interchangeability if it meets the requirements of R.3 and R.4 when it is written on an interchange drive according to R.1 and read on a test drive according to R.2. Data for interchange shall be written and read anywhere within the User Area.

© ISO/IEC 2006 All rights reserved

Copyright International Organization for Standardization
Provided by IHS under license with ISO
No reproduction or networking permitted without license from IHS
Not for Resale

Annex S
(informative)

Office environment

S.1 Air cleanliness

Due to their construction and mode of operation, optical disk cartridges have considerable resistance to the effects of dust particles around and inside the disk drive. Consequently, it is not generally necessary to take special precautions to maintain a sufficiently low concentration of dust particles.

Operation in heavy concentrations of dust should be avoided, e.g. in a machine shop or on a building site.

Office environment implies an environment in which personnel may spend a full working day without protection and without suffering temporary or permanent discomfort.

S.2 Effects of operation

In the office environment (as well as other environments) it is possible for an optical disk drive to degrade the quality of the written marks if the read power is applied to a single track for a long period of time. This would happen if a media in a drive remains loaded, the drive remains in the ready status, and is in jump-back mode on one particular track.

The media manufacturer's selection of the value for the maximum read power allowed in the User Zones, as well as the optical drive manufacturer's read power management method, should reflect this possibility and be designed to minimize any risk to data integrity.

--`,,```,,,,````-`-`,,`,,`,`,,`---

© ISO/IEC 2006 – All rights reserved
Copyright International Organization for Standardization
Provided by IHS under license with ISO
No reproduction or networking permitted without license from IHS
Not for Resale

Annex T
(informative)

Derivation of the operating climatic environment

This Annex gives some background on how some of the conditions of the operating environment in 8.1.2 have been derived.

T.1 Standard climatic environment classes

The conditions of the ODC operating environment are, with a few exceptions mentioned below, based on parameter values of the IEC standard climatic environment class 3K3 described in IEC publication 721-3-3. This publication defines environmental classes for stationary use of equipment at weather-protected locations.

The IEC class 3K3 refers to climatic conditions which ". . . may be found in normal living or working areas, e.g. living rooms, rooms for general use (theatres restaurants etc.), offices, shops, workshops for electronic assemblies and other electrotechnical products, telecommunication centres, storage rooms for valuable and sensitive products."

T.2 Overtemperature considerations

While IEC class 3K3 defines the limits for the room climate only, the ODC operating environment specification in this International Standard takes into consideration also system and drive overtemperature. This means that when inserted in a drive, the ODC will sense a temperature which is above the ambient room temperature. The figures in the operating environment specification have been calculated from the assumption that overtemperature may be up to 20°C.

T.3 Absolute humidity

The introduction of the parameter "absolute humidity (unit: g water / m^3 of air)" is very useful when studying overtemperature. When the temperature rises inside a drive, the relative humidity goes down but the absolute humidity remains substantially constant. So, making room for overtemperature in the operating environment specification affects not only the upper temperature limit but also the lower relative humidity limit. The relationship between these parameters is shown in the climatogram (the relative humidity vs. temperature map) of the ODC operating environment, figure T.1.

The absolute humidity restrictions influence the operating environment in the following two ways:

i. Combination of high temperatures and high relative humidities are excluded. Such combinations could have negative influence on the performance and the life of ODCs.

ii. Combinations of low temperatures and low relative humidities are excluded. Such combinations are very unlikely to occur in worldwide normal office environments.

T.4 Deviations from the IEC standard environment class

Apart from the change introduced by the overtemperature considerations above, there are a few more parameter values which are not based on IEC class 3K3. These are:

- Atmospheric pressure

--`,,```,,,,````-`-`,,`,,`,`,,`---

© ISO/IEC 2006 – All rights reserved

Copyright International Organization for Standardization
Provided by IHS under license with ISO
No reproduction or networking permitted without license from IHS
Not for Resale

The IEC 3K3 lower limit of 70 kPa has been extended to 60 kPa. ODCs according to this International Standard show no intrinsic pressure sensitivity and 70 kPa excludes some possible markets for ODCs.

- Absolute humidity

  The IEC 3K3 value for the upper limit of 25 g/m^3 has been raised to 30 g/m^3 in view of some expected operation in portable devices outside the controlled office environment.

- Temperature

  The maximum temperature around the ODC, i.e. room temperature plus overtemperature, has been limited to 55 °C (while IEC 3K3 + 20 °C would have become 60 °C). For ODCs according to this International Standard, however, the 55 °C limit is considered to be a physical limit above which operation (as well as storage) is not safe.

  This means that equipment designers may want to ensure adequate cooling inside the drive especially when the room temperature approaches the upper IEC 3K3 limit of 40 °C.

- Further

  The rates of change (the gradients) of temperature and relative humidity are not according to IEC 3K3.

T.5 Wet bulb temperature specifications

Instead of specifying limits for the absolute humidity, some of the earlier standards for ODCs as well as those for other digital data storage media often use restrictions of the parameter "wet bulb temperature (unit: °C)" in order to avoid too severe combinations of high temperatures and high relative humidities.

In order to facilitate comparisons between different specifications, figure T.2 and table T.1 show wet bulb temperatures of interest for the ODC operating environment, as well as for the test and storage environments. Since wet bulb temperatures vary slightly with the atmospheric pressure, the diagram is valid for the normal pressure of 101,3 kPa only.

© ISO/IEC 2006 – All rights reserved
Copyright International Organization for Standardization
Provided by IHS under license with ISO
No reproduction or networking permitted without license from IHS
Not for Resale

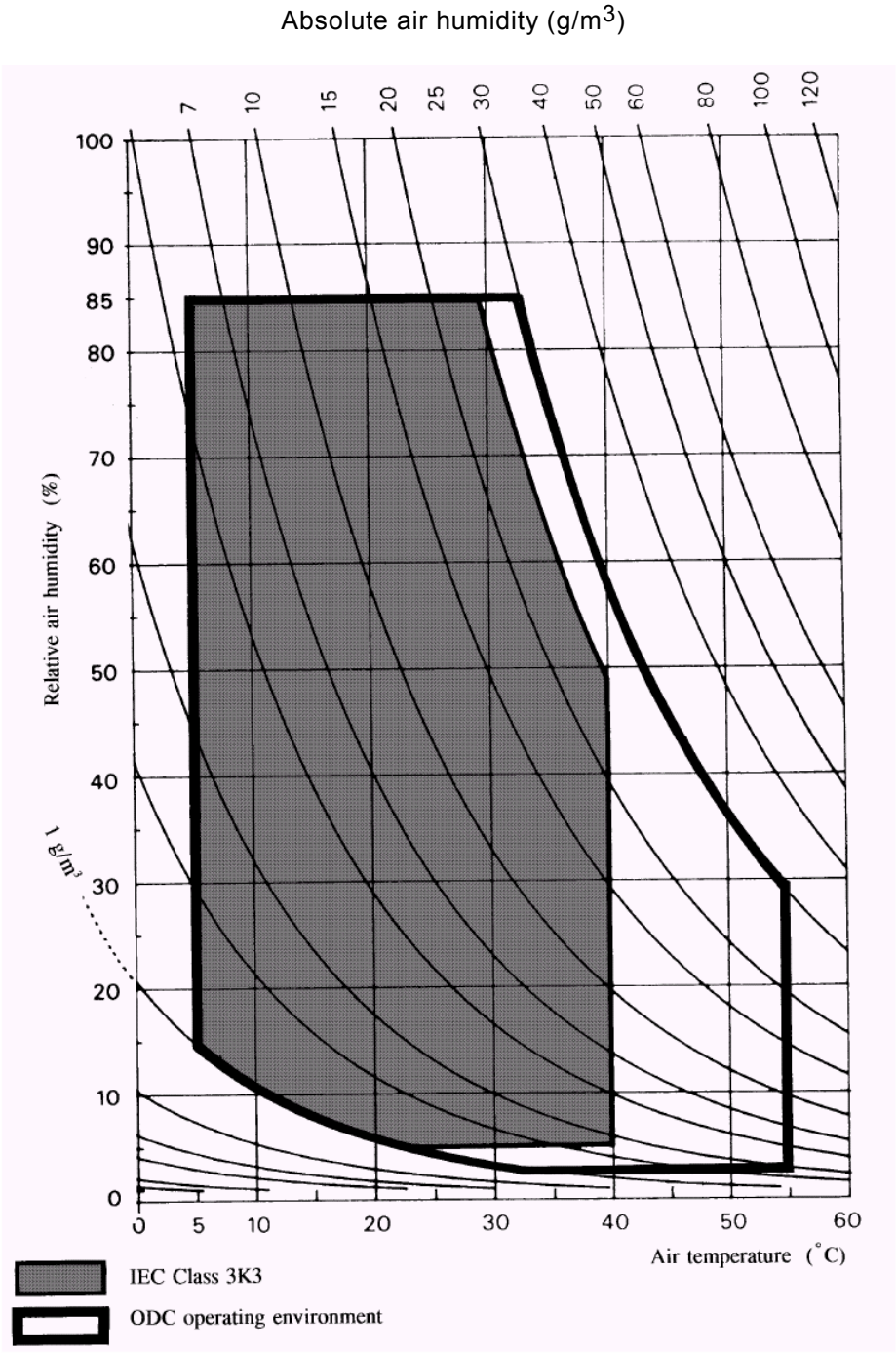

Figure T.1 — Climatogram of IEC Class 3K3 and the ODC operating environment

© ISO/IEC 2006 – All rights reserved

Copyright International Organization for Standardization
Provided by IHS under license with ISO
No reproduction or networking permitted without license from IHS
Not for Resale

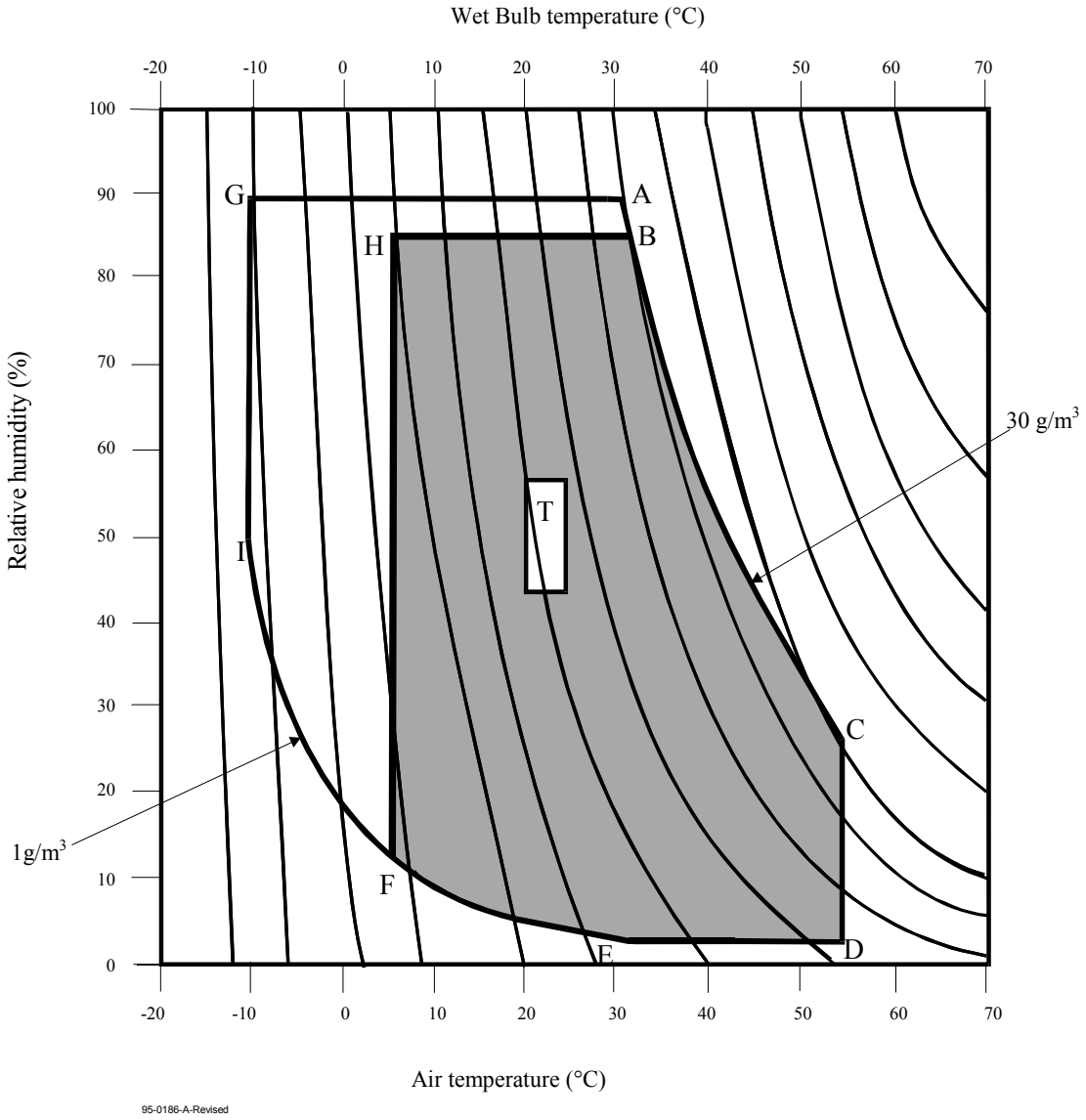

Figure T.2 — Wet bulb temperatures of the operating and storage environments

The points A to I and area T are defined in table T.1.

© ISO/IEC 2006 – All rights reserved
Copyright International Organization for Standardization
Provided by IHS under license with ISO
No reproduction or networking permitted without license from IHS
Not for Resale

Table T.1 — Position of the main points of Figure T.2

	Air temperature °C	Relative humidity %	Wet bulb temperature °C
A	31,7	90,0	30,3
B	32,8	85,0	30,6
C	55,0	28,8	35,5
D	55,0	3,0	22,2
E	31,7	3,0	12,1
F	5,0	14,7	-1,4
G	-10,0	90,0	-10,3
H	5,0	85,0	3,9
I	10,0	46,8	-11,6
Test environment (T)	23,0 ± 2,0	50,0 ± 5,0	---
Storage environment	Region determined by A-B-C-D-E-F-G		
Operating environment	Region determined by B-C-D-E-F-H		

© ISO/IEC 2006 – All rights reserved

Copyright International Organization for Standardization
Provided by IHS under license with ISO
No reproduction or networking permitted without license from IHS
Not for Resale

Annex U
(informative)

Transportation

U.1 General

As transportation occurs under a wide range of temperature and humidity variations, for different periods, by many methods of transport and in all parts of the world it is not possible to specify conditions for transportation or for packaging.

U.2 Packaging

The form of packaging should be agreed between sender and recipient or, in the absence of such agreement, is the responsibility of the sender. It should take account of the following hazards.

U.2.1 Temperature and humidity

Insulation and wrapping should be designed to maintain the conditions for storage over the estimated period of transportation.

U.2.2 Impact loads and vibration

Avoid mechanical loads that would distort the shape of the cartridge.

Avoid dropping the cartridge.

Cartridges should be packed in a rigid box containing adequate shock absorbent material.

The final box should have a clean interior and a construction that provides sealing to prevent the ingress of dirt and moisture.

© ISO/IEC 2006 – All rights reserved
Copyright International Organization for Standardization
Provided by IHS under license with ISO
No reproduction or networking permitted without license from IHS
Not for Resale

Annex V
(informative)

Track deviation measurement

The deviation of a track from its nominal location is measured in the same way as a drive sees a track, i.e. through a tracking servo. The strength of the Reference Servo used for the test is in general less that the strength of the same servo in a normal drive. The difference in strength is intended for margins in the drive. The deviation of the track is related to the tracking error between the track and the focus of the optical beam, remaining after the Reference Servo. The tracking error directly influences the performance of the drive, and is the best criterion for testing track deviations.

The specification of the axial and radial deviations can be described in the same terms. Therefore, this Annex applies to both axial and radial track deviations.

V.1 Relation between requirements

The acceleration required by the motor of the tracking servo to make the focus of the optical beam follow the tracks on the disk (see 11.4.6 and 11.4.8) is a measure for the allowed deviations of the tracks. An additional measure is the allowed tracking error between the focus and the track (see 20.2.4). The relation between both is given in figure V.1 where the maximum allowed amplitude of a sinusoidal track deviation is given as a function of the frequency of the deviation. It is assumed in the figure that there is only one sinusoidal deviation present at a time.

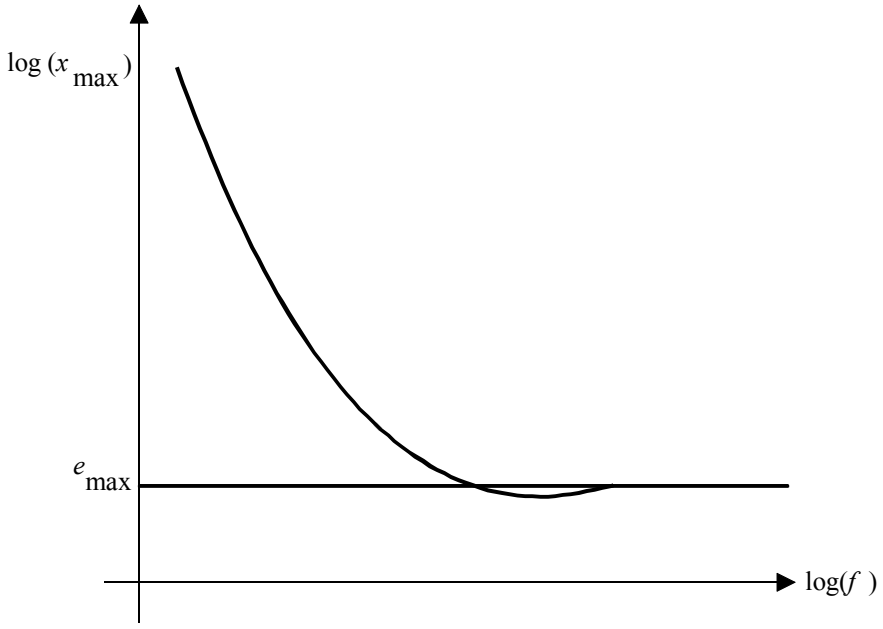

Figure V.1 — Maximum allowed amplitude of a single, sinusoidal track deviation

© ISO/IEC 2006 – All rights reserved
Copyright International Organization for Standardization
Provided by IHS under license with ISO
No reproduction or networking permitted without license from IHS
Not for Resale

At low frequencies the maximum allowed amplitude x_{max} is given by

$$x_{max} = a_{max} / (2\pi f)^2, \quad (1)$$

where a_{max} is the maximum acceleration of the servo motor.

At high frequencies the maximum allowed amplitude x_{max} is given by

$$x_{max} = e_{max} \quad (2)$$

where e_{max} is the maximum allowed tracking error. The connection between both frequency regions is given in V.3.

V.2 Reference Servo

The above restrictions of the track deviations are equal to the restriction of the track deviations for a Reference Servo. A Reference Servo has a well-defined transfer function, and reduces a single, sinusoidal track deviation with amplitude x_{max} to a tracking error e_{max} as in figure V.1.

The open-loop transfer function of the Reference Servo shall be

$$H_s(i\omega) = \frac{1}{c} \times \left(\frac{\omega_0}{i\omega}\right)^2 \times \frac{1 + \frac{i\omega c}{\omega_0}}{1 + \frac{i\omega}{c\omega_0}} \quad (3)$$

where $i = \sqrt{-1}$, $\omega = 2\pi f$ and $\omega_0 = 2\pi f_0$, with f_0 the 0 dB frequency of the open-loop transfer function. The constant c gives the cross-over frequencies of the lead-lag network of the servo: the lead break frequency $f_1 = \frac{f_0}{c}$ and the lag break frequency $f_2 = f_0 \times c$. The reduction of a track deviation x to a tracking error e by the Reference Servo is given by

$$\frac{e}{x} = \frac{1}{1 + H_s} \quad (4)$$

If the 0 dB frequency is specified as

$$\omega_0 = \sqrt{\frac{a_{max} c}{e_{max}}} \quad (5)$$

then a low-frequency track deviation with an acceleration a_{max} will be reduced to a tracking error e_{max}, and a high frequency track deviation will not be reduced. The curve in figure V.1 is given by

$$x_{max} = e_{max} |1 + H_s| \quad (6)$$

The maximum acceleration required from the motor of this Reference Servo is

$$a_{max}(\text{motor}) = e_{max}\, \omega^2 |1 + H_s| \quad (7)$$

At low frequencies $f > f_0 / c$ applies

$$a_{max}(\text{motor}) = a_{max}(\text{track}) = \frac{\omega_0^2 e_{max}}{c} \quad (8)$$

Hence, it is permitted to use a_{max}(motor) as specified for low frequencies in 11.4.6 and 11.4.8 for the calculation of ω_0 of a Reference Servo.

© ISO/IEC 2006 – All rights reserved
Copyright International Organization for Standardization
Provided by IHS under license with ISO
No reproduction or networking permitted without license from IHS
Not for Resale

V.3 Requirement for track deviations

The track deviations shall be such that, when tracking with a Reference Servo on a disk rotating at the specified frequency, the tracking error shall not be larger than e_{max} during more than 10 µs.

The open-loop transfer function of the Reference Servo for axial and radial tracking shall be given by equation (3) within an accuracy such that $|1 + H|$ does not differ by more than ± 20% from its nominal value in a bandwidth from 20 Hz to 150 kHz. The constant c shall be 3. The 0 dB frequency $\frac{\omega_0}{2\pi}$ shall be given by equation (5), where a_{max} and e_{max} for axial and radial tracking are specified in 11.4.6, 11.4.8 and 20.2.4.

V.4 Measurement implementation

Three possible implementations for axial or radial measurement systems have been given below.

H_a is the open-loop transfer function of the actual tracking servo of the drive. H_s is the transfer function for the Reference Servo as given in equation (3). x and y are the position of the track and the focus of the optical beam. e_s is the tracking error after a Reference Servo, the signal of which has to be checked according to the previous paragraph.

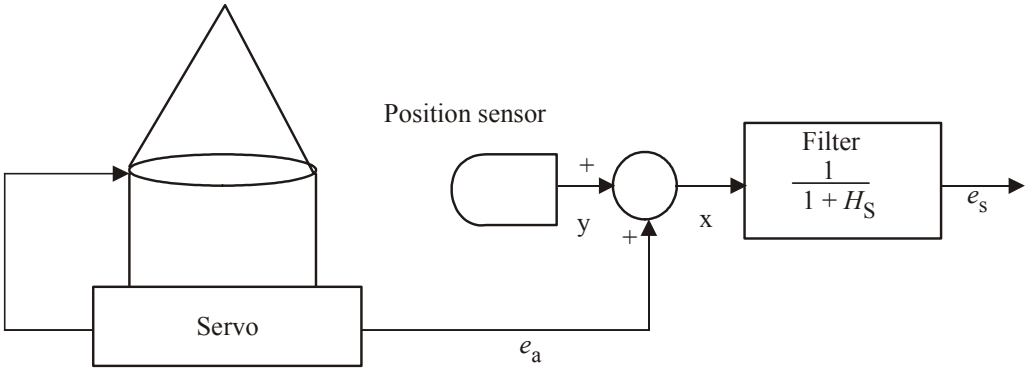

Figure V.2 — Implementation of a Reference Servo by filtering the track position signal with the reduction characteristics of the Reference Servo

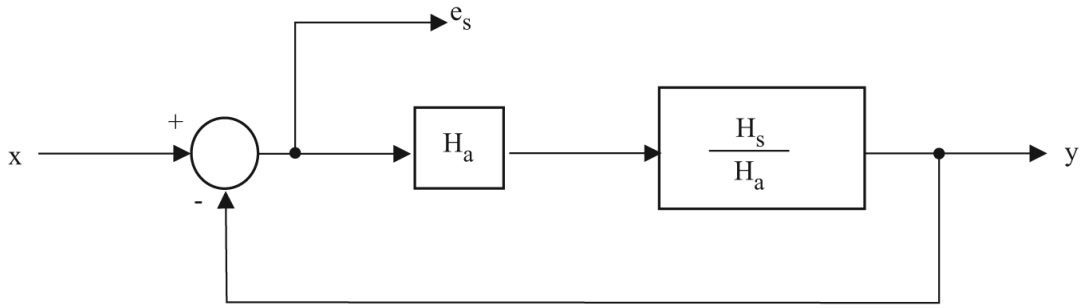

Figure V.3 — Implementation of a Reference Servo by changing the transfer function of the actual servo

Copyright International Organization for Standardization All rights reserved
Provided by IHS under license with ISO
No reproduction or networking permitted without license from IHS
Not for Resale

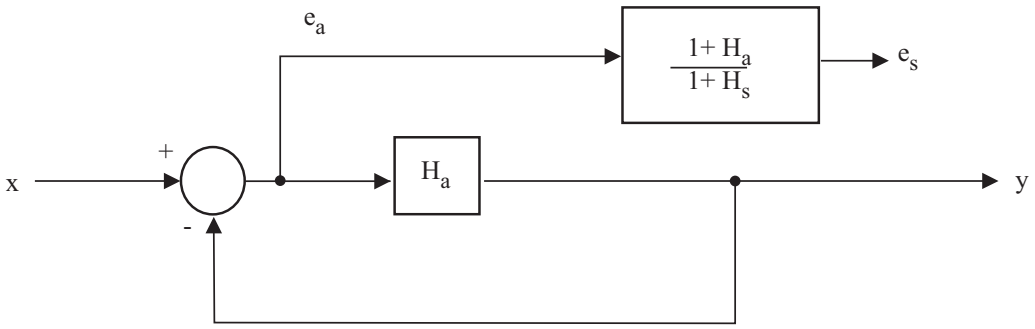

Figure V.4 — Implementation of a Reference Servo by changing the tracking error of the actual servo

The optimum implementation depends on the characteristics H_a and H_s. Good results for motors in leaf springs are often obtained by using separate circuits in a low and high frequency channel. The implementation of figure V.2 is used in the low-frequency channel, while that of figures V.3 or V.4 is used in the high-frequency channel. The signals from both channels are added with a reversed cross-over filter to get the required tracking error. In the low-frequency channel one can also use the current through the motor as a measure of the acceleration of the motor, provided the latter is free from hysteresis. The current must be corrected for the transfer function of the motor and then be converted to a tracking error with a filter with a transfer function $\frac{e}{a} = \frac{e}{x\omega^2}$ derived from equation (4).

© ISO/IEC 2006 – All rights reserved
Copyright International Organization for Standardization
Provided by IHS under license with ISO
No reproduction or networking permitted without license from IHS
Not for Resale

Annex W
(informative)

Measurement of the vertical birefringence of the cover layer

This Annex describes a non-contact measurement method for optical disk cover layer birefringence. This technique will yield average or bulk values of both in-plane birefringence (IPB) and vertical birefringence (VB) with one procedure. The method uses a slightly modified variable angle spectroscopic ellipsometer (VASE), although the variable wavelength capability is unnecessary for a simple characterization at the operating point of this International Standard.

The method assumes the principal optical axes of the cover layer align with the polar r, φ, z directions of the disk, which is valid for the type of cover layer considered.

Finally, the method described also assumes that the contribution of the ellipticity of the coated Phase Change film(s) to the measured optical retardation is negligible compared to the contribution of cover layer material.

An ellipsometric measurement of the phase retardation between orthogonal polarization states for a range of incident angles is made to uniquely determine the cover layer refractive indexes for the three principal directions (N_r, N_φ, N_z). This range of incident angles should be restricted only to limitations of the apparatus on the low angle side, and beam walk off on the high angle side. Angles ranging from -70° to $+70^o$ are recommended. Three angles would generally be the minimum necessary to establish VB.

For a disk where the principal optical axes are aligned with the cylindrical coordinates of the disk (which is almost universally the case), the following equation expresses the retardation as a function of angle of incidence to the indexes of the disk: N_r, N_φ, N_z. The retardation data are regression fit to the non-linear analytical expression given below, and the indexes are determined as free parameters.

$$\Delta = d \times \left(\sqrt{N_r^2 - \sin^2(\theta)} - \frac{N_\varphi}{N_z} \sqrt{N_z^2 - \sin^2(\theta)} \right)$$

where Δ is the retardation and *d* is the thickness of the cover layer. The birefringence results from the differences between the indexes

In-plane: $\Delta N_{in} = N_r - N_\varphi$

Vertical: $\Delta N_{vert} = 0{,}5\ (N_r + N_\varphi) - N_z$

The dimensionless birefringence can be expressed in length units by multiplying ΔN_{in} or ΔN_{vert} by the cover layer thickness. In this case, the birefringence is expressed as nm of retardation.

© ISO/IEC 2006 – All rights reserved
Copyright International Organization for Standardization
Provided by IHS under license with ISO
No reproduction or networking permitted without license from IHS
Not for Resale

Annex X
(informative)

Quadrature Wobble offset control

The drive system shall use the Push-Pull (PP) signal generated from the land-groove structure of the disk as the primary method of following the land and groove tracks.

This Annex is describing an example of a possible use of the Quadrature Wobble marks (QWM) for controlling the eventual offset of the push-pull tracking.

X.1 Quadrature Wobble tracking offset description

The QWM are incorporated into the Preformatted Headers, and are contained in the QWM field (see figure X.1). The QWM are generated by the use of Pattern A and Pattern B defined in 15.4.

The 64T QWM field is divided into four 16T sub-fields denoted as S, A, B, M. These sub-fields have the following physical relationships:

S Both adjacent Recording Tracks contain spaces

A Only one adjacent Recording Track contains a mark

B Only one adjacent Recording Track contains a mark

M Both adjacent Recording Tracks contains a mark

The Quadrature Wobble method uses the read signal to generate a tracking offset (TRK-OFF) signal. The relative amplitudes of marks from the two adjacent Recording Tracks are used to measure the offset from the track centreline. This method generates a tracking offset update once per sector. Eight read signal levels are sampled during each Preformatted Header. These signal levels are identified as S_L, A_L, B_L, M_L, S_G, A_G, B_G, and M_G in figure X.2.

When using PP to follow a groove track, the QWM from the two adjacent land tracks (A_L and B_L) are used to determine the tracking offset. The groove track centreline shall be defined as the point at which the read signal levels A_L and B_L are equal. Likewise, when using PP to follow a land track, the QWM from the two adjacent groove tracks (A_G and B_G) are used to determine the tracking offset. The land track centreline shall be defined as the point at which the read signal levels A_G and B_G are equal.

Signal levels S_L and M_L can be used to qualify the signal levels A_L and B_L against defects when tracking on a groove track. Likewise, signal levels S_G and M_G can be used to qualify the signal levels A_G and B_G against defects when tracking on a land track.

Sampling of the eight levels can be synchronized by the detection of the AM and ID patterns of the Preformatted Header. The eight levels should be sampled near the centre of each 16T interval. The long mark and space interval of 16T is needed to allow for track-to-track misalignment of the QWM due to mastering and variations in spindle speed or eccentricity of the Recording Tracks on the disk.

The read signal shown on figure X.2 is for the readout spot path shown in the figure X.1. This path is indicated by the name G even (in). This name indicates that the readout spot is following a path on groove track with an even Physical Track number. The (in) indicates that the path is not on the centreline of the groove track, but rather is too close to the inner diameter of the disk. The dashed lines of the read signal indicate data areas of the preformatted header, while solid lines indicate the read signal levels of the QWM.

© ISO/IEC 2006 – All rights reserved
Copyright International Organization for Standardization
Provided by IHS under license with ISO
No reproduction or networking permitted without license from IHS
Not for Resale

The relative amplitudes of the eight QWM samples and the TRK-OFF signal polarity are listed in table X.1.

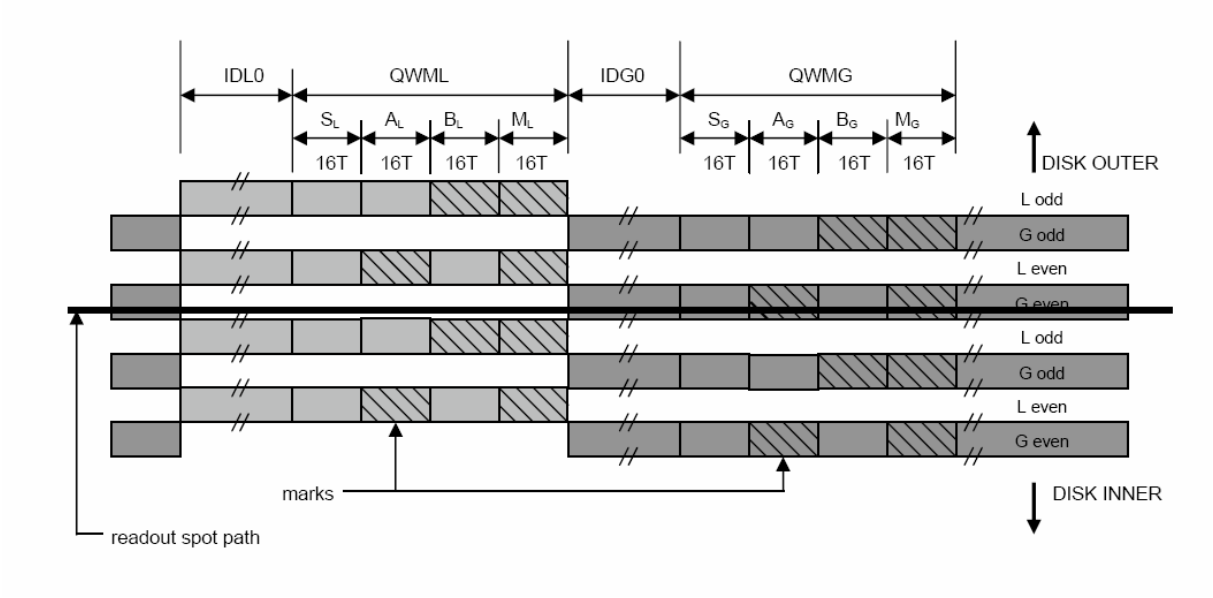

Figure X.1 — Land and Groove Quadrature Wobble Marks

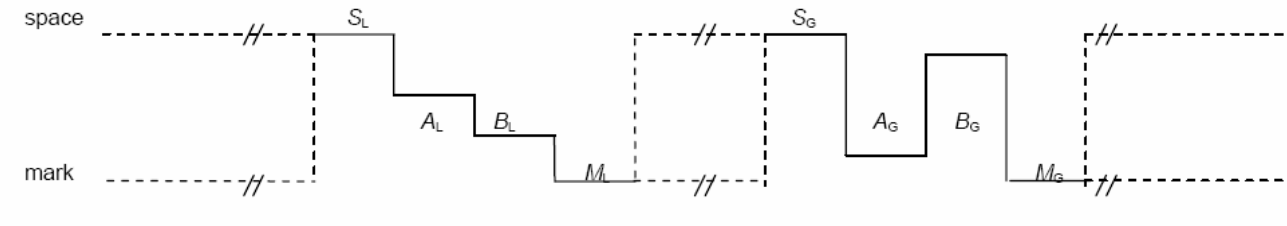

Figure X.2 — Example of read waveform
(For the read out spot path "G even (in)" shown on figure X.1)

Table X.1 — Quadrature Wobble Recording Track offset relationships

Recording Track (Offset)	Relationship of A_L and B_L	Relationship of A_G and B_G	TRK-OFF Signal
G even (in)	$A_L > B_L$	$A_G < B_G$	–
G even (0)	$A_L = B_L$	$A_G < B_G$	0
G even (out)	$A_L < B_L$	$A_G < B_G$	+
G odd (in)	$A_L < B_L$	$A_G > B_G$	–
G odd (0)	$A_L = B_L$	$A_G > B_G$	0
G odd (out)	$A_L > B_L$	$A_G > B_G$	+
L even (in)	$A_L < B_L$	$A_G < B_G$	–
L even (0)	$A_L < B_L$	$A_G = B_G$	0
L even (out)	$A_L < B_L$	$A_G > B_G$	+
L odd (in)	$A_L > B_L$	$A_G > B_G$	–
L odd (0)	$A_L > B_L$	$A_G = B_G$	0
L odd (out)	$A_L > B_L$	$A_G < B_G$	+

Note: Assumes that the mark signal is smaller than the space signal.

© ISO/IEC 2006 – All rights reserved
Copyright International Organization for Standardization
Provided by IHS under license with ISO
No reproduction or networking permitted without license from IHS
Not for Resale

X.2 Tracking Offset Signal Calculation

The tracking offset signal (TRK-OFF) can be calculated using the following method:

When using PP to track on the groove:

If ($A_G > B_G$) then TRK-OFF = $A_L - B_L$

else TRK-OFF = $B_L - A_L$

where the read signal level from a mark is less than the read signal from a space.

When using PP to track on the land:

If ($A_L < B_L$) then TRK-OFF = $A_G - B_G$

else TRK-OFF = $B_G - A_G$

where the read signal level from a mark is less than the read signal from a space.

The polarity of the TRK-OFF signal has the following meaning:

Negative (–)	Readout spot is too close to the inner diameter of the disk
Zero (0)	Readout spot centred on the recording track
Positive (+)	Readout spot is too close to the outer diameter of the disk

X.3 QWM Defect Qualification

The S and M sub-fields of the QWM provide read signal reference levels that can be optionally used to qualify the QWM fields adjacent to the Recording Track being followed. Both the *A* and *B* read signal levels should be between the *S* and *M* reference levels. In addition, the read signal level from *S* should always be larger than *M*. A threshold value *X* can be applied to quantify a minimum difference between *S* and *M*, such that QWM fields that are obscured by dust or contain a defect are disqualified. The following is a suggested QWM qualification method:

When using PP to track on the groove:

If {($S_L - M_L$) > *X* and ($S_L > A_L > M_L$) and ($S_L > B_L > M_L$)} then A_L and B_L are considered valid.

When using PP to track on the land:

If {($S_G - M_G$) > *X* and ($S_G > A_G > M_G$) and ($S_G > B_G > M_G$)} then A_G and B_G are considered valid.

It is assumed that the read signal level from a mark is less than the read signal from a space.

X.4 QWM Tracking Offset at Zone Boundaries

Quadrature wobble tracking offset control cannot be used at zone boundaries due to the purposeful misalignment of the Preformatted headers.

The TRK-OFF signal shall not be used to adjust offsets on groove tracks or land tracks that are adjacent to any zone boundary.

© ISO/IEC 2006 – All rights reserved
Copyright International Organization for Standardization
Provided by IHS under license with ISO
No reproduction or networking permitted without license from IHS
Not for Resale

Annex Y
(informative)

Start Position Shift (SPS) implementation

Y.1 Start Position Shift purpose

The purpose of SPS is to change the physical position of the start of recorded data to extend the cycle life of Type RW media. The rewrite cycle life of Type RW media is increased using two mechanisms. The first mechanism is to distribute the thermal shock to the recording layer near the beginning and end of the written data area. The second mechanism is to shift the position and polarity of the recorded data to minimize the effect of writing identical data patterns in the same location every time.

The SPS algorithm uses two random shift values *M* and *N* and a random polarity bit *P*. The value of *M* shifts the data start position. The value of *N* shifts the start and end positions of the written data. The polarity of the data to be written is controlled by the value of *P*.

Y.2 Start Position Shift random signal generation

The SPS random signal generator circuit is shown in figure Y.1. The circuit consists of a feedback shift register in which bits r_0 to r_6 are used as the value of *M*, r_7 to r_{13} are used as the value of *N*, and r_{14} is used as *P*.

The shift register can be continuously clocked using the channel clock source, and the values of *M*, *N*, and *P* are sampled (latched) prior to writing each sector.

The feedback shift register shall be initialized with all bits set to ONE. If the register is initialized with all bits set to ZERO, the register value will remain unchanged (all bits equal ZERO).

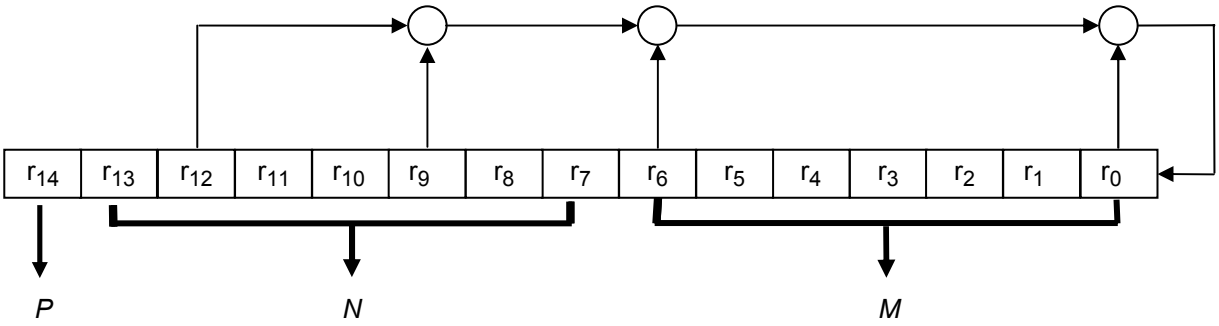

Figure Y.1 — SPS random signal generator circuit

M = 0 to 127 Data position shift

N = 0 to127 Start position shift

P = 0 or 1 Positive / negative write polarity

⊕ means Exclusive-OR logical operation.

© ISO/IEC 2006 – All rights reserved

Copyright International Organization for Standardization
Provided by IHS under license with ISO
No reproduction or networking permitted without license from IHS
Not for Resale

Annex Z
(informative)

Sector retirement guidelines

This International Standard assumes approximately 36 000 sectors may be replaced in any of the following cases:

- A sector does not have at least one reliable ID field as determined by CRC.
- A sector has a PBA that is contradictory to the one anticipated by the preceding PBAs.
- The total number of defective bytes exceeds 228 bytes in a sector.
- The number of defective bytes exceeds 6 bytes in any ECC interleave (codeword).
- The number of defective Reference fields exceeds 25 in a sector.
- For Type WORM media, the number of data transitions in the VAP field exceeds 20 in an unrecorded sector.
- The axial tracking error exceeds acceptable limits during writing.
- The radial tracking error exceeds acceptable limits during writing.
- The wobble groove PLL timing error exceeds acceptable limits during writing.

© ISO/IEC 2006 – All rights reserved
Copyright International Organization for Standardization
Provided by IHS under license with ISO
No reproduction or networking permitted without license from IHS
Not for Resale

Annex AA
(informative)

Guidelines for the use of Type WORM ODCs

This Annex lists some important points to be observed when using Type WORM media specified by this International Standard.

a. Read the status of the Media Sensor holes and the SDI sectors when the ODC is inserted to ascertain the media type**, so as to enable and/or disable the appropriate host commands.

b. Read the DDS sectors to determine if the disk has been initialized. If it has been initialized, do not allow modification or amendment of the DDS. If it has not been initialized, do not allow logical block access to the WORM Zone.

c. Before writing a sector, it must be determined whether or not the sector has already been written. This can be done by checking the VAP field for data transitions prior to writing each sector. If sufficient transitions in the VAP field are detected, the sector shall not be written.

d. Disallow commands that can directly or indirectly alter written data such as SCSI Erase.

e. It is recommended that SCSI Write Long and SCSI Write PBA commands be disallowed.

** NOTE Features relating to media type determination are listed in Annex BB.

© ISO/IEC 2006 – All rights reserved

Copyright International Organization for Standardization
Provided by IHS under license with ISO
No reproduction or networking permitted without license from IHS
Not for Resale

Annex BB
(informative)

Media type identification in existing and future standards

This International Standard specifies cartridge features and information recorded on the disk which can be used to identify the specific types of optical disk cartridges which conform to this International Standard. It is expected that other media recording layers, sector sizes, and user data capacities will be developed in the future. It is therefore recommended that the following conventions be used for these future cartridges.

BB.1 Media sensor holes

Media sensor hole number 1 shall be closed for all types of Write Once Read Many recording layers.

Media sensor hole number 1 shall be open for all types of Rewritable recording layers.

BB.2 PBA format and values in the Lead-out Zone

Media types can be determined by parking the actuator at the inner diameter of the disk and attempting to read PBA values of sectors in the Lead-out Zone. Media type identification can be accomplished by assuming and testing each of the existing sector formats.

Three pieces of format information can assist with media type identification:

1. PBA's can be properly decoded with the sector format of the assumed media type.

2. Range of PBA values at the inner diameter of the disk are consistent with the assumed media type.

3. Relationship of groove and land PBA values is consistent for adjacent Recording Tracks of the assumed media type.

BB.3 Bytes of SDI sectors

Bytes 0 through 26 of the SDI sectors shall be written with values that are consistent with the definitions of this International Standard.

The ability to read SDI sectors without errors at the expected PBA's for such sectors is final verification of the media type.

© ISO/IEC 2006 – All rights reserved
Copyright International Organization for Standardization
Provided by IHS under license with ISO
No reproduction or networking permitted without license from IHS
Not for Resale

Annex CC
(informative)

Laser power calibration for evaluation of media power parameters

CC.1 Variance of testing condition

The laser power of the media tester should be calibrated carefully since the values of the media power parameters, defined in 23.3.1, are easily affected by the variation allowed for in the Reference Drive. The laser spot profile on the recording layer varies with the optical characteristics allowed by the Reference Drive as specified in 9.2. Table CC.1 shows the best and worst conditions allowed by the Reference Drive from the point of view of the write power sensitivity.

Table CC.1 — The best and worst conditions allowed for the Reference Drive

Parameter	Best condition	Worst condition
λ	405 nm	410 nm
λ /NA	579 nm	586 nm
Wave front aberration	0	0,033 λ rms
Disk tilt	0	2,8 mrad
Variation of the cover layer thickness	0	3 μm

CC.2 Power calibration

Laser power calibration of the tester should be done in the following manner. Use of a high-speed front power monitor is recommended for precise calibration.

Step 1

Calibrate the high-speed front monitor by using a power meter (figure CC.1).

- The calibration can be done in a d.c. laser operation with a d.c. power meter.
- For the purpose of observing the write pulse shape during writing, a high speed (>500 MHz) front power monitor is recommended.

© ISO/IEC 2006 – All rights reserved

Copyright International Organization for Standardization
Provided by IHS under license with ISO
No reproduction or networking permitted without license from IHS
Not for Resale

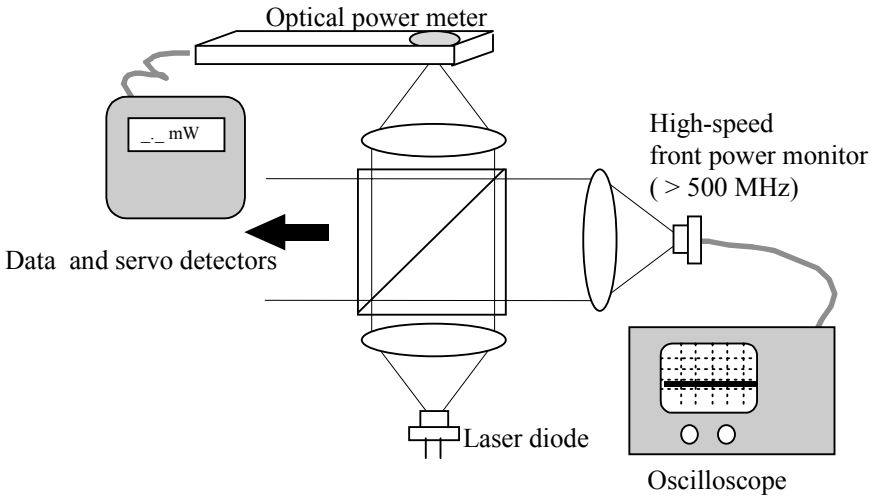

Figure CC.1 — Calibration of the front power monitor

Step 2

Directly observe the write pulse shape during writing (figure CC.2).

- Pulse power in focused condition is different from that in the not-focused condition because of the self coupled effect of the laser diode.
- Pulse power levels and pulse widths should be carefully observed in real testing condition.
- Check the power levels and timing of the pulses. Verify that the pulses correspond with the data recorded in the SDI sectors of the disk.

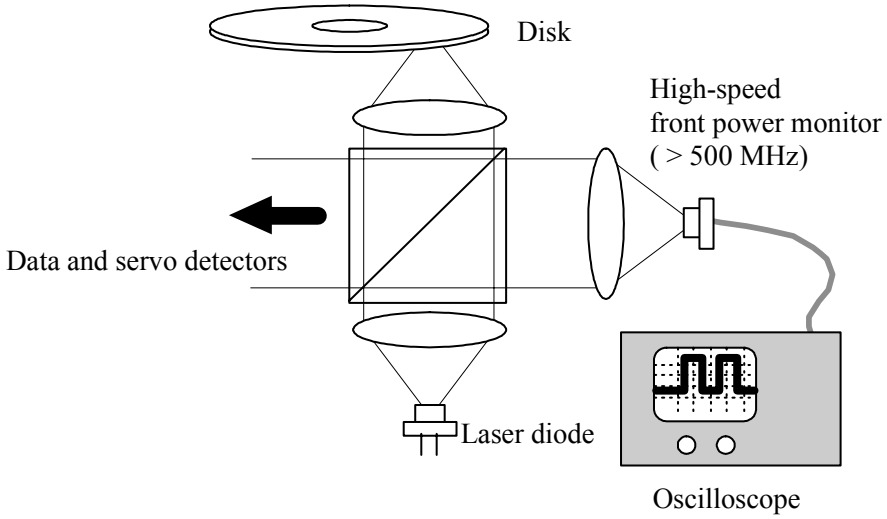

Figure CC.2 — Measurement of pulse power and pulse width

© ISO/IEC 2006 – All rights reserved
Copyright International Organization for Standardization
Provided by IHS under license with ISO
No reproduction or networking permitted without license from IHS
Not for Resale

Step 3

Measure the write pulse power levels and pulse widths (figure CC.3).

- Ringing can be removed by using a low-pass filter.
- For precise pulse energy measurement, average power level measurement using a fixed pulse duty cycle is recommended.

Notes for measurement:

– Disk temperature

Disk temperature should be kept at the test temperature of 23 °C ± 2 °C. Internal temperature may rise for an enclosed tester.

– Stray light

The stray light within the optical head may enter the objective lens and form a stray beam spot. Even if the temperature increase in the optical beam is small, the measurement for the light power through the objective lens may be affected.

– Contamination of optical components (especially the objective lens)

If the light is absorbed by dust or other debris, the light power through the objective lens decreases. This can be measured by the power meter and does not, therefore, result in any complications. If the light is diverted instead of being absorbed, not all of the light power through the objective lens contributes to increasing the temperature at the recording layer of the media. Frequent cleaning is required for accurate results.

– Beam spot size and tilt

Before the measurement of media power parameters, the beam profile of the tester should be checked by optical knife edge profiler. The measured spot diameter should be near the diffraction-limited size defined by the optimum value λ/NA: 579 nm of the Reference Drive. The disk tilt should also be carefully adjusted to be near zero.

© ISO/IEC 2006 – All rights reserved

Copyright International Organization for Standardization
Provided by IHS under license with ISO
No reproduction or networking permitted without license from IHS
Not for Resale

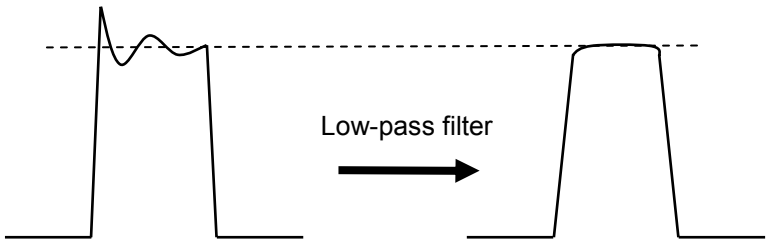

Figure CC.3a — Elimination of ringing using a low-pass filter

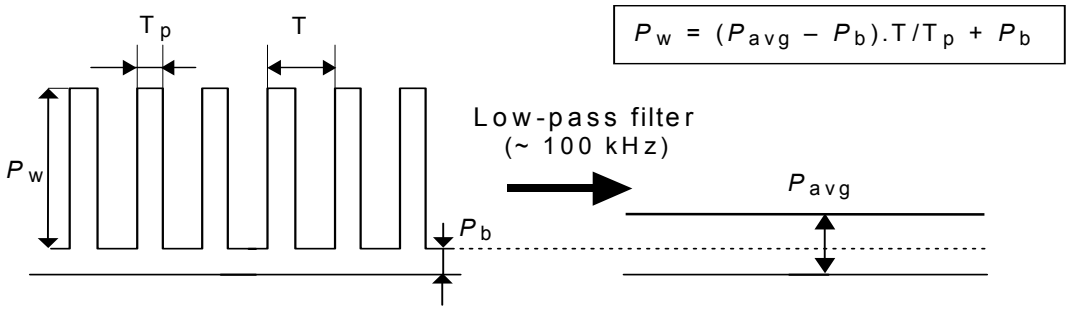

Figure CC.3b — Determination of pulse power level from average power level

Figure CC.3 — Determination of pulse power levels

© ISO/IEC 2006 – All rights reserved
Copyright International Organization for Standardization
Provided by IHS under license with ISO
No reproduction or networking permitted without license from IHS
Not for Resale

Copyright International Organization for Standardization
Provided by IHS under license with ISO
No reproduction or networking permitted without license from IHS
Not for Resale

ICS 35.220.30

Price based on 164 pages

© ISO/IEC 2006 – All rights reserved
Copyright International Organization for Standardization
Provided by IHS under license with ISO
No reproduction or networking permitted without license from IHS
Not for Resale