INTERNATIONAL STANDARD

ISO/IEC 16825

First edition
1999-05-15

Information technology — Case for 120 mm DVD-RAM disks

Technologies de l'information — Coffret pour disques DVD-RAM de diamètre 120 mm

--`,,```,,,,````-`-`,,`,,`,`,,`---

Reference number
ISO/IEC 16825:1999(E)

Copyright International Organization for Standardization
Provided by IHS under license with ISO
No reproduction or networking permitted without license from IHS

Not for Resale

Contents

Page

Section 1 - General **1**

1 Scope **1**

2 Conformance **1**

3 Normative references **1**

4 Definitions **1**
4.1 Cartridge **1**
4.2 Case **1**

5 Conventions and notations **1**
5.1 Representation of numbers **1**
5.2 Names **2**

6 General description of the case **2**
6.1 General description of the Type 1 case **2**
6.2 General description of the Type 2 case **2**
6.3 General description of the Type 3 case **2**

7 General requirements **3**
7.1 Environments **3**
7.1.1 Test environment **3**
7.1.2 Operating environment **3**
7.1.3 Storage environment **4**
7.1.4 Transportation **4**
7.2 Temperature shock **4**
7.3 Safety requirement **4**
7.4 Flammability **4**

Section 2 - Dimensional and Mechanical characteristics of the case **4**

8 Dimensional characteristics **4**
8.1 Dimensions of the Type 1 case **4**
8.1.1 Overall dimensions **4**

© ISO/IEC 1999

All rights reserved. Unless otherwise specified, no part of this publication may be reproduced or utilized in any form or by any means, electronic or mechanical, including photocopying and microfilm, without permission in writing from the publisher.

ISO/IEC Copyright Office • Case postale 56 • CH-1211 Genève 20 • Switzerland

Printed in Switzerland

Copyright International Organization for Standardization
Provided by IHS under license with ISO
No reproduction or networking permitted without license from IHS Not for Resale

8.1.2 Location hole **6**
8.1.3 Alignment hole **6**
8.1.4 Reference surfaces **6**
8.1.5 Insertion slots **7**
8.1.6 Detents **7**
8.1.7 Gripper slots **8**
8.1.8 Write-inhibit hole **8**
8.1.9 Sensor holes **8**
8.1.10 Sensing areas **9**
8.1.11 Spindle and head windows **9**
8.1.12 Shutter shape **10**
8.1.13 Path for shutter opener **11**
8.1.14 Label area **11**
8.1.15 Identification marks for Sides A and B **11**
8.2 Dimensions of the Type 2 case **23**
8.2.1 Overall dimensions **23**
8.2.2 Location hole **24**
8.2.3 Alignment hole **24**
8.2.4 Reference surfaces **24**
8.2.5 Insertion slot **25**
8.2.6 Detents **25**
8.2.7 Gripper slots **26**
8.2.8 Write-inhibit hole **26**
8.2.9 Sensor holes **26**
8.2.10 Sensing areas **27**
8.2.11 Spindle and head windows **27**
8.2.12 Shutter shape **28**
8.2.13 Path for shutter opener **29**
8.2.14 Label area **29**
8.2.15 Identification mark for Side A **29**
8.2.16 Opening and opening cover for taking the disk out of the case **30**
8.3 Dimensions of the Type 3 case **40**
8.3.1 Sensor holes **41**
8.3.2 Opening and opening cover **41**

9 Mechanical characteristics **41**
9.1 Material **41**
9.2 Mass **41**
9.3 Edge distortion **41**
9.4 Compliance **41**
9.5 Shutter opening force **41**

10 Interface between the case used as cartridge and a drive **41**
10.1 Capture cylinder **41**
10.2 Inner dimensions of the case **42**

--`,,```,,,,````-`-`,,`,,`,`,,`---
Copyright International Organization for Standardization
Provided by IHS under license with ISO
No reproduction or networking permitted without license from IHS
Not for Resale

11 Orientation of the disk in the case **44**

11.1 Two-sided disk (Type 2S) in case Type 1 **44**

11.2 One-sided disk (Type 1S) in case Types 1, 2 and 3 **44**

Annexes

A - Position of the case relative to the Reference Planes **45**

B - Edge distortion test **46**

C - Compliance test **48**

D - Examples of an opening cover for Type 2 or Type 3 cases **50**

E - Transportation **52**

Copyright International Organization for Standardization
Provided by IHS under license with ISO
No reproduction or networking permitted without license from IHS Not for Resale

Foreword

ISO (the International Organization for Standardization) and IEC (the International Electrotechnical Commission) form the specialized system for worldwide standardization. National bodies that are members of ISO or IEC participate in the development of International Standards through technical committees established by the respective organization to deal with particular fields of technical activity. ISO and IEC technical committees collaborate in fields of mutual interest. Other international organizations, governmental and non-governmental, in liaison with ISO and IEC, also take part in the work.

International Standards are drafted in accordance with the rules given in the ISO/IEC Directives, Part 3.

In the field of information technology, ISO and IEC have established a joint technical committee, ISO/IEC JTC 1. Draft International Standards adopted by the joint technical committee are circulated to national bodies for voting. Publication as an International Standard requires approval by at least 75 % of the national bodies casting a vote.

This International Standard was prepared by JISC (as Standard JIS X 6244-1998) with document support and contribution from ECMA and was adopted, under a special “fast-track procedure”, by Joint Technical Committee ISO/IEC JTC 1, *Information technology*, in parallel with its approval by national bodies of ISO and IEC.

Annexes A to C form a normative part of this International Standard. Annexes D and E are for information only.

--`,,```,,,,````-`-`,,`,,`,`,,`---

Copyright International Organization for Standardization
Provided by IHS under license with ISO
No reproduction or networking permitted without license from IHS Not for Resale

Information technology — Case for 120 mm DVD-RAM disks

Section 1 - General

1 Scope

This International Standard specifies the characteristics of a case for use with 120 mm DVD-RAM disks as specified in ISO/IEC 16824. This International Standard specifies three related, but different implementations of such cases, viz.

Type 1 Provides a case for a one-sided (Type 1S) or a two-sided (Type 2S) DVD-RAM disk such that the disk can not be removed from the case. This case is reversible.

Type 2 Provides a case for a one-sided DVD-RAM disk (Type 1S) such that the disk may be removed from the case. This case is not reversible.

Type 3 Provides a case into which a one-sided DVD-RAM disk (Type 1S) may be inserted, then used as a cartridge. This case is not reversible.

This International Standard specifies

– the environments in which the cases are to be operated and stored;

– the dimensional and mechanical characteristics of the case, so as to provide mechanical interchangeability between data processing systems;

This International Standard provides for mechanical interchange between optical disk drives. Together with 120 mm DVD-RAM disks according to ISO/IEC 16824 and a standard for volume and file structure, it provides for full data interchange between data processing systems.

2 Conformance

A claim of conformance with this International Standard shall specify the Type implemented. A case shall be in conformance with this International Standard if it meets the mandatory requirements specified herein for its Type.

3 Normative references

The following normative documents contain provisions which, through reference in this text, constitute provisions of this International Standard. For dated references, subsequent amendments to, or revisions of, any of these publications do not apply. However, parties to agreements based on this International Standard are encouraged to investigate the possibility of applying the most recent editions of the normative documents indicated below. For undated references, the latest edition of the normative document referred to applies. Members of ISO and IEC maintain registers of currently valid International Standards.

IEC 950:1991, *Safety of information technology equipment.*

ISO/IEC 16824:1999, *Information technology — 120 mm DVD rewritable disk (DVD-RAM).*

4 Definitions

For the purposes of this International Standard, the following definitions apply.

4.1 **Cartridge:** A device consisting of a case containing a rewritable disk.

4.2 **Case:** The housing for an optical disk, that protects the disk and facilitates disk interchange.

5 Conventions and notations

5.1 Representation of numbers

A measured value is rounded off to the least significant digit of the corresponding specified value. For instance, it implies that a specified value of 1,26 with a positive tolerance of + 0,01 and a negative tolerance of - 0,02 allows a range of measured values from 1,235 to 1,275.

Copyright International Organization for Standardization
Provided by IHS under license with ISO
No reproduction or networking permitted without license from IHS Not for Resale

5.2 Names

The names of entities, e.g. specific sides, etc. are given a capital initial.

6 General description of the case

6.1 General description of the Type 1 case (Figure 1)

The case is a rigid protective container of rectangular shape. Sides A and B of the case are identical as far as the features given here are concerned. References to Sides A and B of the case can be changed to B or A respectively. When the opening of the one is a head and spindle window for the spindle and the optical head of the drive, that of the other is an access window for the disk clamping apparatus. A shutter uncovers the windows upon insertion into the drive, and automatically covers them upon removal from the drive. The case has features that enable a drive to reject a mis-inserted cartridge, to inhibit writing, sensor holes, detents for autoloading and a vertical use, gripper slots for an autochanger, label areas and side identification marks.

Sides A and B of the case have the same configuration.

6.2 General description of the Type 2 case (Figure 2)

The Type 2 case has the same features as the Type 1 case, but with some differences. The shape of the case is different on Side A and on Side B. Side A does not need to have a location hole, an alignment hole, Reference Surfaces, a write-inhibit hole, sensor holes and sensing areas. The case has an opening closed by a cover. This cover can be opened. In open position, the disk can be taken out of the case. Sensor hole A1 is originally closed. When the disk has been removed from the case, then this hole remains permanently open, indicating that the original disk contained in the case has been removed at least once or has been replaced by another disk.

6.3 General description of the Type 3 case (Figure 2)

The Type 3 case is identical with Type 2 case except that the sensor hole A1 is always open.

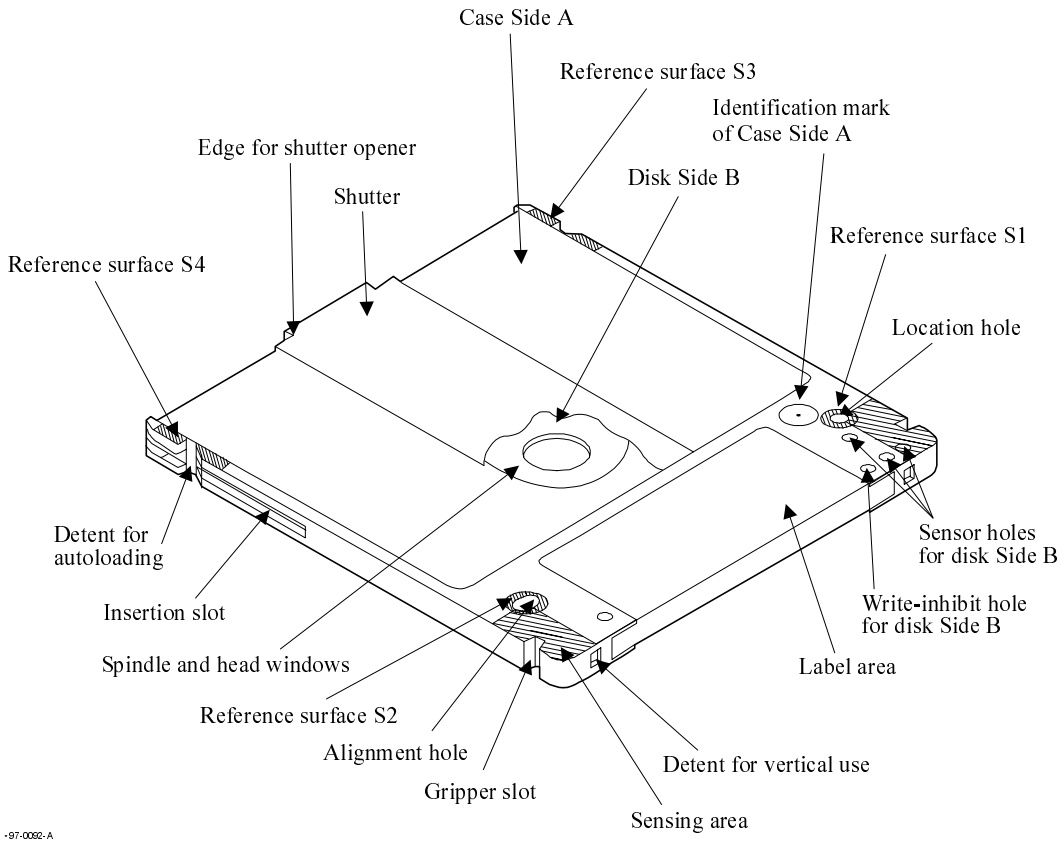

Figure 1 - General view of the Type 1 case, seen from Side A

Copyright International Organization for Standardization
Provided by IHS under license with ISO
No reproduction or networking permitted without license from IHS
Not for Resale

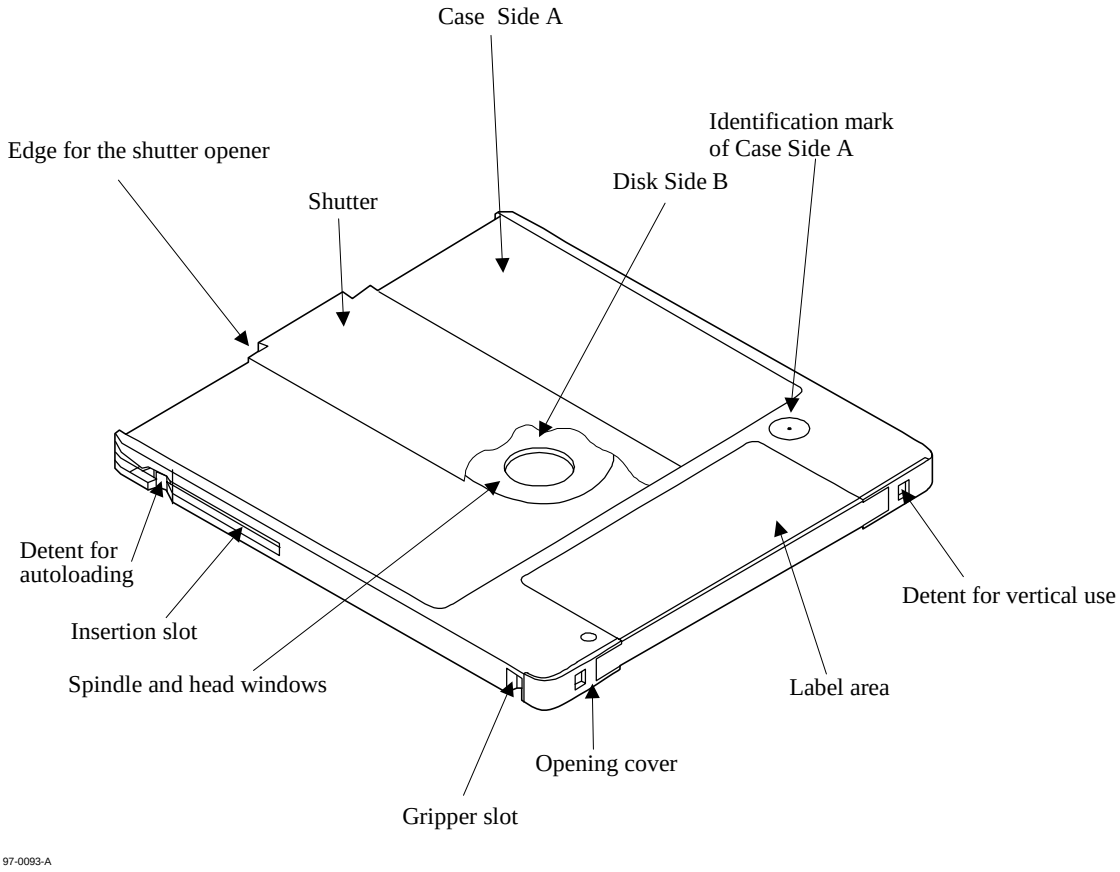

Figure 2 - General view of the Type 2 and Type 3 cases, seen from Side A

7 General requirements

7.1 Environments

7.1.1 Test environment

The test environment is the environment where the air immediately surrounding the case has the following properties:

Temperature	: 23 °C ± 2 °C
Relative humidity	: 50 % ± 5 %
Atmospheric pressure	: 86 kPa to 106 kPa

No condensation on or in the case or cartridge shall occur. Before testing, the case or cartridge shall be conditioned in this environment for 48 hours minimum.

Unless otherwise stated, all tests and measurements shall be made in this test environment.

7.1.2 Operating environment

This International Standard requires that a case which meets all requirements of this International Standard in the specified test environment provides mechanical interchange over the specified ranges of environmental parameters in the operating environment. When the case according to this International Standard contains a DVD-RAM disk according to International Standard ISO/IEC 16824, they constitute together a cartridge. This cartridge shall meet the requirements of this clause and provides for data interchange.

Copyright International Organization for Standardization
Provided by IHS under license with ISO
No reproduction or networking permitted without license from IHS Not for Resale

The operating environment is the environment where the air immediately surrounding the case or cartridge has the following properties:

Temperature	: 5 °C to 60 °C
Relative humidity	: 3 % to 85 %
Absolute humidity	: 1 g/m^3 to 30 g/m^3
Temperature gradient	: 10 °C /h max.
Relative humidity gradient	: 10 %/h max.

No condensation on or in the case or cartridge shall occur. If the case or cartridge has been exposed to conditions outside those specified in this clause, it shall be acclimatized in the operating environment for at least 2 h before use.

7.1.3 Storage environment

The storage environment is defined as an environment where the air immediately surrounding the case or cartridge has the following properties.

Temperature	: -10 °C to 50 °C
Relative humidity	: 3 % to 85 %
Absolute humidity	: 1 g/m^3 to 30 g/m^3
Atmospheric pressure	: 75 kPa to 106 kPa
Temperature gradient	: 10 °C /h max.
Relative humidity gradient	: 10 %/h max.

No condensation on or in the case or cartridge shall occur.

7.1.4 Transportation

This International Standard does not specify requirements for transportation; guidance is given in annex E.

7.2 Temperature shock

The case shall be withstand a temperature shock of up to 20°C when inserted into, or removed from, the drive.

7.3 Safety requirement

The case shall satisfy the safety requirements of Standard IEC 950, when used in the intended manner or in any foreseeable use in an information processing system.

7.4 Flammability

The case shall be made from materials that comply with the flammability class for HB materials, or better, as specified in IEC 950.

Section 2 - Dimensional and Mechanical characteristics of the case

8 Dimensional characteristics

The dimensions of the case shall be referred to three orthogonal Reference Planes X, Y and Z. The case shall be constrained such that four reference surfaces S1 to S4 on Side B of the case lie in Reference Plane Z. The intersection of the three planes defines the centre of the location hole. The centre of the alignment hole shall lie on the intersection of Reference Planes X and Z. Refer to annex A. A dimension of a feature referenced to one of the planes is the shortest distance from the feature to the plane.

Side A of the Type 1 case is referred to the three orthogonal Reference Planes X, Y' and Z', where

– Y' is a plane parallel to Reference Plane Y at a nominal distance of 102,0 mm,
– Z' is a plane parallel to Reference Plane Z at a nominal distance of 8,0 mm.

8.1 Dimensions of the Type 1 case

The dimensions of the Type 1 case shall be measured in the test environment. The dimensions of the case in an operating environment can be estimated from the dimensions specified in this clause.

8.1.1 Overall dimensions (Figure 3)

The total length of the case shall be

Copyright International Organization for Standardization
Provided by IHS under license with ISO
No reproduction or networking permitted without license from IHS Not for Resale

L_{101} = 135,5 mm ± 0,4 mm.

The distance from the top of the case to Reference Plane X shall be

L_{102} = 112,5 $^{+\ 0,3\ \text{mm}}_{-\ 0,2\ \text{mm}}$

with the width

L_{103} = 3,6 mm min.

from the left-hand and right-hand edges of the case.

The distance from the bottom of the case to Reference Plane X shall be

L_{104} = 23,0 mm ± 0,2 mm.

The total width of the case shall be

L_{105} = 124,6 $^{+\ 0,0\ \text{mm}}_{-\ 0,5\ \text{mm.}}$

The distance from the left-hand side of the case to Reference Plane Y shall be

L_{106} = 113,3 $^{+\ 0,2\ \text{mm}}_{-\ 0,4\ \text{mm.}}$

The distance from the right-hand side of the case to Reference Plane Y shall be

L_{107} = 11,3 $^{+\ 0,1\ \text{mm}}_{-\ 0,3\ \text{mm.}}$

The two corners of the top shall be rounded with a radius

R_{101} = 4,0 mm ± 0,2 mm

centred at

L_{108} = 4,0 mm ± 0,1 mm

from the edge of the case and

L_{109} = 3,5 mm ± 0,1 mm

from the top of the case.

The two corners of the bottom shall be rounded with a radius

R_{102} = 4,0 mm ± 0,2 mm.

In the zones delimited by

L_{110} = 6,0 mm

from the left-hand and right-hand edges of the case, there shall be the continuous guide areas running from the top to Reference Plane X of the case, with a width

L_{111} = 0,8 mm min.

the thickness of the case shall be

L_{112} = 8,0 $^{+\ 0,2\ \text{mm}}_{-\ 0,1\ \text{mm.}}$

The eight long edges of the case shall be rounded with a radius

R_{103} = 0,5 mm ± 0,1 mm.

Copyright International Organization for Standardization
Provided by IHS under license with ISO
No reproduction or networking permitted without license from IHS Not for Resale

8.1.2 Location hole (Figure 3)

The centre of the location hole shall coincide with the intersection of Reference Planes X, Y and Z.

The diameter of the hole shall be

$D_{101} = 4{,}00\ \text{mm}\ {}^{+\ 0{,}05\ \text{mm}}_{-\ 0{,}00\ \text{mm}}$

its depth shall be

L_{113} = 1,2 mm min.

The room below the location hole shall be free up to

L_{114} = 5,0 mm min.

below Reference Plane Z

The diameter of the free room shall be at least equal to D_{101}.

The lead-in edges shall be rounded with a radius

R_{104} = 0,5 mm ± 0,1 mm.

8.1.3 Alignment hole (Figure 3)

The centre of the alignment hole shall lie on the intersection of the Reference Planes X and Z at a distance

L_{115} = 102,0 mm ± 0,2 mm

from Reference Plane Y.

The alignment hole shall have a substantially rectangular shape. Its dimensions shall be

$L_{116} = 4{,}00\ \text{mm}\ {}^{+\ 0{,}05\ \text{mm}}_{-\ 0{,}00\ \text{mm}}$

$L_{117} = 5{,}6\ \text{mm}\ {}^{+\ 0{,}2\ \text{mm}}_{-\ 0{,}0\ \text{mm}}$

its depth shall be equal to L_{113}. The room below the alignment hole shall be free up to at least L_{114}. The dimensions of the free room shall be at least L_{116} and L_{117}.

The lead-in edges shall be rounded with a radius R_{104}.

8.1.4 Reference surfaces (Figure 4)

There shall be four reference surfaces S1, S2, S3 and S4 on Side B of the case.

Surfaces S1 and S2 shall be circular with a diameter

D_{102} = 7,0 mm min.

S1 shall be centred on the location hole, and S2 shall be centred on the alignment hole.

Surfaces S3 and S4 shall be rectangular with dimensions

L_{118} = 8,2 mm max.

L_{119} = 110,2 mm max.

from Reference Plane Y and

L_{120} = 87,0 mm max.

L_{121} = 108,0 mm min.

from Reference Plane X, except in the areas of the detents for autoloading.

Copyright International Organization for Standardization
Provided by IHS under license with ISO
No reproduction or networking permitted without license from IHS Not for Resale

8.1.5 Insertion slots (Figure 5)

The case shall have two symmetrical insertion slots.

The bottom of the slots shall be at a distance

L_{123} = 60,0 mm ± 0,2 mm

from Reference Plane X.

The depth measured from the edge of the case shall be

L_{124} = 2,0 mm $^{+\ 0,2\ \text{mm}}_{-\ 0,0\ \text{mm.}}$

The side of the insertion slots parallel to Reference Plane Z shall be at a distance

L_{125} = 2,5 mm ± 0,1 mm

from Reference Plane Z. The width of the insertion slots shall be

L_{126} = 3,0 mm $^{+\ 0,2\ \text{mm}}_{-\ 0,0\ \text{mm.}}$

The slots shall have a lead-in slope defined by

L_{127} = 7,0 mm ± 0,2 mm

from the top of the case and an angle

α_{101} = 7,5° ± 1,0°.

8.1.6 Detents (Figure 5)

The case shall have two symmetrical detents intended for autoloading. The detents shall be through Side A and Side B.

The position and dimensions of the detents are specified by

R_{105} = 0,5 mm max.

L_{128} = 100,5 mm ± 0,3 mm

L_{129} = 93,0 mm ± 0,3 mm

L_{130} = 3,3 mm ± 0,1 mm

L_{131} = 2,5 mm ± 0,1 mm.

The outside edges of the detents shall be rounded off with a radius

R_{106} = 0,5 mm ± 0,1 mm.

The bottom of the case shall have two symmetrical detents intended for clamping a cartridge in case of vertical use. Their dimensions shall be

L_{132} = 3,0 mm ± 0,1 mm

L_{133} = 3,0 mm ± 0,1 mm

L_{134} = 1,0 mm ± 0,1 mm

The centre of one of these detents lies on Reference Plane Y, the centre of the other is at a distance

L_{135} = 102,0 mm ± 0,3 mm

from Reference Plane Y. Both centres are at a distance

L_{136} = 4,0 mm ± 0,1 mm

from Reference Plane Z.

--`,,```,,,,````-`-`,,`,,`,`,,`---
Copyright International Organization for Standardization
Provided by IHS under license with ISO
No reproduction or networking permitted without license from IHS
Not for Resale

8.1.7 Gripper slots (Figure 5)

The case shall have two symmetrical gripper slots. The slots shall be through Sides A and B.

Each slot shall have a depth of

$L_{137} = 3{,}0\ \text{mm}\ ^{+\ 0{,}3\ \text{mm}}_{-\ 0{,}0\ \text{mm}}$

from the edge of the case and a width of

$L_{138} = 4{,}0\ \text{mm}\ ^{+\ 0{,}3\ \text{mm}}_{-\ 0{,}0\ \text{mm}}$.

The upper edge of the slot shall be at

$L_{139} = 11{,}0\ \text{mm}\ ^{+\ 0{,}0\ \text{mm}}_{-\ 0{,}3\ \text{mm}}$

from Reference Plane X.

The corners of the slot shall be rounded off by a radius

$R_{107} = 0{,}5\ \text{mm} \pm 0{,}2\ \text{mm}$.

8.1.8 Write-inhibit hole (Figure 6)

The case with a two-sided disk shall have a write-inhibit hole on both Sides A and B. The case with a one-sided disk shall have a write-inhibit hole on Side B only. The write-inhibit hole shall have a device for opening and closing the hole. The hole at the right-hand side of Side B of the case, is the write-inhibit hole for Side A of the disk. The protected side of the disk shall be identified either by an indication on the case or by the fact that the device for Side A of the disk can only be operated from Side A of the case.

When writing and erasing on Side A of the disk are not allowed, the write-inhibit hole shall be open. It shall have a diameter

$D_{103} = 3{,}0\ \text{mm}$ min.

The position of its centre shall be specified by

$L_{140} = 18{,}5\ \text{mm} \pm 0{,}2\ \text{mm}$

$L_{141} = 9{,}0\ \text{mm} \pm 0{,}2\ \text{mm}$

on Side B of the case.

The hole shall extend below Reference Plane Z by

$L_{142} = 5{,}0\ \text{mm}$ min.

with a diameter equal at least to D_{103}.

When writing and erasing of the disk are allowed, the write-inhibit hole shall be closed by the write protect device.

The write protect device shall not be recessed from Reference Plane Z by more than 0,3 mm.

8.1.9 Sensor holes (Figure 6)

The case shall have three sensor holes on Side B. The set of holes on Side B of the case, A1, A2 and A3 pertains to Side A of the disk. The holes shall have a diameter of

$D_{104} = 3{,}0\ \text{mm}$ min.

and the positions of their centres shall be specified by L_{140} and

$L_{144} = 7{,}5\ \text{mm} \pm 0{,}2\ \text{mm}$

$L_{145} = 3{,}5\ \text{mm} \pm 0{,}2\ \text{mm}$

$L_{146} = 2{,}0\ \text{mm} \pm 0{,}2\ \text{mm}$.

--`,,```,,,,````-`-`,,`,,`,`,,`---

Copyright International Organization for Standardization
Provided by IHS under license with ISO
No reproduction or networking permitted without license from IHS Not for Resale

The room below the holes shall be free up to

L_{147} = 5,0 mm min.

Reference Plane Z

The diameter of the free room shall be at least equal to D_{104}. The holes are permitted to extend through Side A.

When a hole for Side A of the disk is closed, the closure shall not be recessed from Reference Plane Z by more than 0,3 mm.

Side A of the case shall have corresponding sensor holes B1, B2 and B3 with the diameter D_{104}.

The functions of the sensor holes are specified in table 1.

Table 1 - Use of the sensor holes

Sensor hole	Function		Condition	
	Closed	Open	Case for a two-sided disk	Case for a one-sided disk
A1	The original disk has not been taken out	The original disk has been taken out or a disk has been put in	Closed	Closed
A2	Active side	Non active side	Closed	Closed
A3	Reserved		Closed	Closed
B1	The original disk has not been taken out	The original disk has been taken out or a disk has been put in	Closed	Closed
B2	Active side	Non active side	Closed	Open
B3	Reserved		Closed	Closed

8.1.10 Sensing areas (Figure 6)

The case shall have two sensing areas on Side B used by drives for the detection of a cartridge. The first area shall be limited by Reference Planes X and Y, the bottom and the right-side of the case. The second area shall be limited by Reference Plane X, a plane parallel to Reference Plane Y at a distance equal to L_{115}, the bottom and the left-hand side of the case. These areas may be recessed from Reference Plane Z by 0,3 mm max., except for the reference surfaces S1 and S2, the gripper slots and the sensor holes.

8.1.11 Spindle and head windows (Figure 7)

The dimensions of the window are referenced to a centreline, located at a distance

L_{150} = 51,0 mm ± 0,1 mm

from Reference Plane Y. The width of the window from the top of the case to

L_{151} = 50,0 mm max.

shall be

$L_{152} = 19{,}5\ \text{mm}\ {}^{+\,0{,}2\ \text{mm}}_{-\,0{,}0\ \text{mm}}$

and

$L_{153} = 19{,}5\ \text{mm}\ {}^{+\,0{,}2\ \text{mm}}_{-\,0{,}0\ \text{mm}}$.

The top of the window shall be specified by

R_{108} = 60,7 mm min.

Copyright International Organization for Standardization
Provided by IHS under license with ISO
No reproduction or networking permitted without license from IHS
Not for Resale

originating from the intersection of L_{150} and

L_{154} = 40,0 mm ± 0,1 mm.

The width of the window from L_{151} to L_{154} shall be given by

L_{155} = 17,0 mm min.

and

L_{156} = 17,0 mm min.

The bottom of the window shall be the arc of the semi-circle which smoothly joins the sides of the window, specified by a radius

R_{109} = 17,0 mm min.

and its centre shall be defined by the intersection of L_{150} and L_{154}.

The area bounded by R_{108} and top of the case shall be recessed from Reference Plane Z by

L_{157} = 2,55 mm min.

over the width of window.

8.1.12 Shutter shape (Figure 8)

The case shall have a spring-loaded shutter completely covering the spindle and head windows when the case is not inside a drive. The shutter shall be free to slide in a recessed area of the case. The shutter shall not protrude beyond Reference Planes Z or Z' by more than 0,15 mm.

When introduced into a drive, the shutter shall be moved so as to uncover the spindle and head windows. It shall have a pair of guide and edges against which the shutter opening mechanism of the drive can act to open the shutter. The shutter can be shifted rightwards or leftwards.

Both guide edges shall be located at

$$L_{158} = 112{,}0 \text{ mm} \begin{matrix} +\,0{,}2 \text{ mm} \\ -\,0{,}4 \text{ mm.} \end{matrix}$$

from Reference Plane X.

When the shutter is closed, the right-hand opener edge shall be at

L_{159} = 38,0 mm ± 0,4 mm

and the left-hand opener edge shall be

L_{160} = 64,0 mm ± 0,4 mm.

from Reference Plane Y.

The depth of each opener edge shall be

$$L_{161} = 3{,}0 \text{ mm} \begin{matrix} +\,0{,}2 \text{ mm} \\ -\,0{,}0 \text{ mm} \end{matrix}$$

from L_{158} and the top shall be rounded off with a radius

R_{110} = 0,5 mm max.

The length of the guide edges measured from the corresponding opener edge shall be

L_{162} = 7,0 mm min.

The intersection of the guide edges and the opener edges shall be rounded with a radius

R_{111} = 0,5 mm max.

Other corners of the guide and opener edges shall be rounded with a radius

Copyright International Organization for Standardization
Provided by IHS under license with ISO
No reproduction or networking permitted without license from IHS Not for Resale

R_{112} = 1,0 mm max.

8.1.13 Path for shutter opener (Figures 9 and 10)

When the shutter is moved rightwards until the left opener edge is at a distance

L_{163} = 26,5 mm,

from Reference Plane Y, the windows shall be open over

L_{164} = 16,5 mm min.

from L_{150} and over an arc of

R_{113} = 17,0 mm min.

originating at the intersection of L_{150} and L_{154}.

The left opener edge shall be at

L_{165} = 26,0 mm max.

from Reference Plane Y, when the shutter is in its right-hand end position.

When corresponding the position of the right opener edge is

L_{166} = 75,5 mm,

the windows shall be open at L_{164} from L_{150} and with a radius R_{113} originating at the intersection of L_{150} and L_{154}.

The position of the right opener edge shall be

L_{167} = 76,0 mm min.

when the shutter is in its left-hand end position.

8.1.14 Label area (Figure 11)

The case shall have three label areas on Side A and Side B and on the bottom side, with dimensions

Sides A and B:

L_{168} = 10,0 mm ± 0,2 mm

L_{169} = 13,0 mm ± 0,2 mm

L_{170} = 76,0 mm ± 0,3 mm

R_{114} = 2,0 mm ± 0,2 mm

Bottom:

L_{171} = 13,0 mm ± 0,2 mm

L_{172} = 76,0 mm ± 0,3 mm

L_{173} = 5,0 mm ± 0,2 mm

L_{174} = 97,0 mm ± 0,3 mm

L_{175} = 1,0 mm ± 0,2 mm

L_{176} = 6,0 mm ± 0,2 mm.

The label area shall be recessed by 0,2 mm min. on all three sides.

8.1.15 Identification marks for Sides A and B (Figure 12)

Side A and Side B shall be identified by an identification mark provided on a concave part on the right-hand side of Side A and Side B, respectively. On Side A, this concave part presents a small round projection, on Side B two such projections are provided. The position and dimensions of these identification marks shall be as follows.

Copyright International Organization for Standardization
Provided by IHS under license with ISO
No reproduction or networking permitted without license from IHS Not for Resale

Side A:

$R_{115} = 0{,}5\ ^{+0{,}1\ \text{mm}}_{-0{,}0\ \text{mm}}$

$R_{116} = 18{,}0\ \text{mm} \pm 1{,}0\ \text{mm}$

$L_{178} = 0{,}5\ ^{+0{,}1\ \text{mm}}_{-0{,}0\ \text{mm}}$

$L_{179} = 7{,}0\ \text{mm} \pm 0{,}3\ \text{mm}$

$L_{180} = 5{,}0\ \text{mm} \pm 0{,}3\ \text{mm}$

$L_{181} = 0{,}6\ ^{+0{,}1\ \text{mm}}_{-0{,}0\ \text{mm}}$

Side B:

$R_{115} = 0{,}5\ ^{+0{,}1\ \text{mm}}_{-0{,}0\ \text{mm}}$

$R_{116} = 18{,}0\ \text{mm} \pm 1{,}0\ \text{mm}$

$L_{178} = 0{,}5\ ^{+0{,}1\ \text{mm}}_{-0{,}0\ \text{mm}}$

$L_{179} = 7{,}0\ \text{mm} \pm 0{,}3\ \text{mm}$

$L_{180} = 5{,}0\ \text{mm} \pm 0{,}3\ \text{mm}$

$L_{181} = 0{,}6\ ^{+0{,}1\ \text{mm}}_{-0{,}0\ \text{mm}}$

$L_{182} = 3{,}2\ \text{mm} \pm 0{,}3\ \text{mm}.$

Copyright International Organization for Standardization
Provided by IHS under license with ISO
No reproduction or networking permitted without license from IHS
Not for Resale

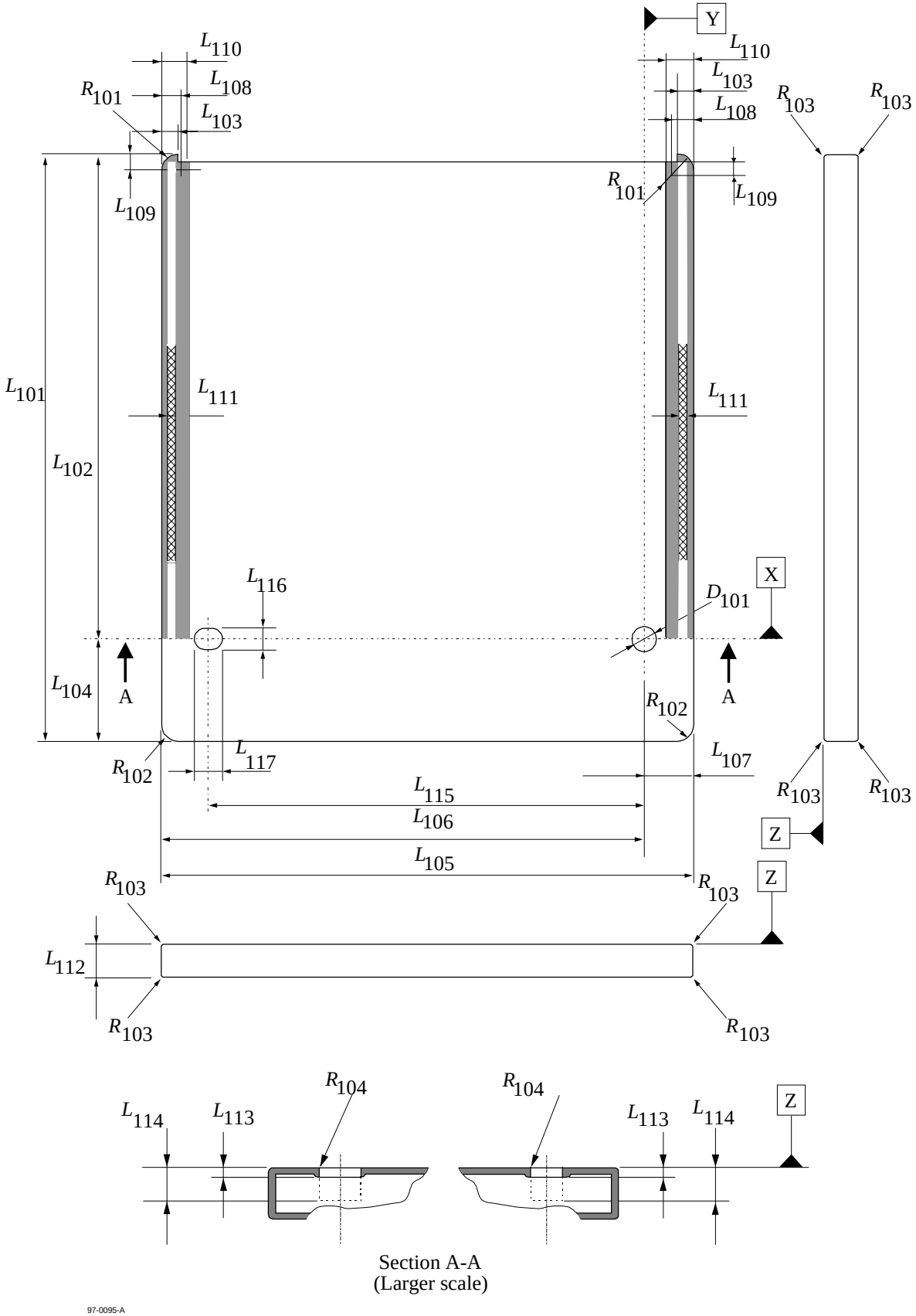

Figure 3 - Overall dimensions

Copyright International Organization for Standardization
Provided by IHS under license with ISO
No reproduction or networking permitted without license from IHS
Not for Resale

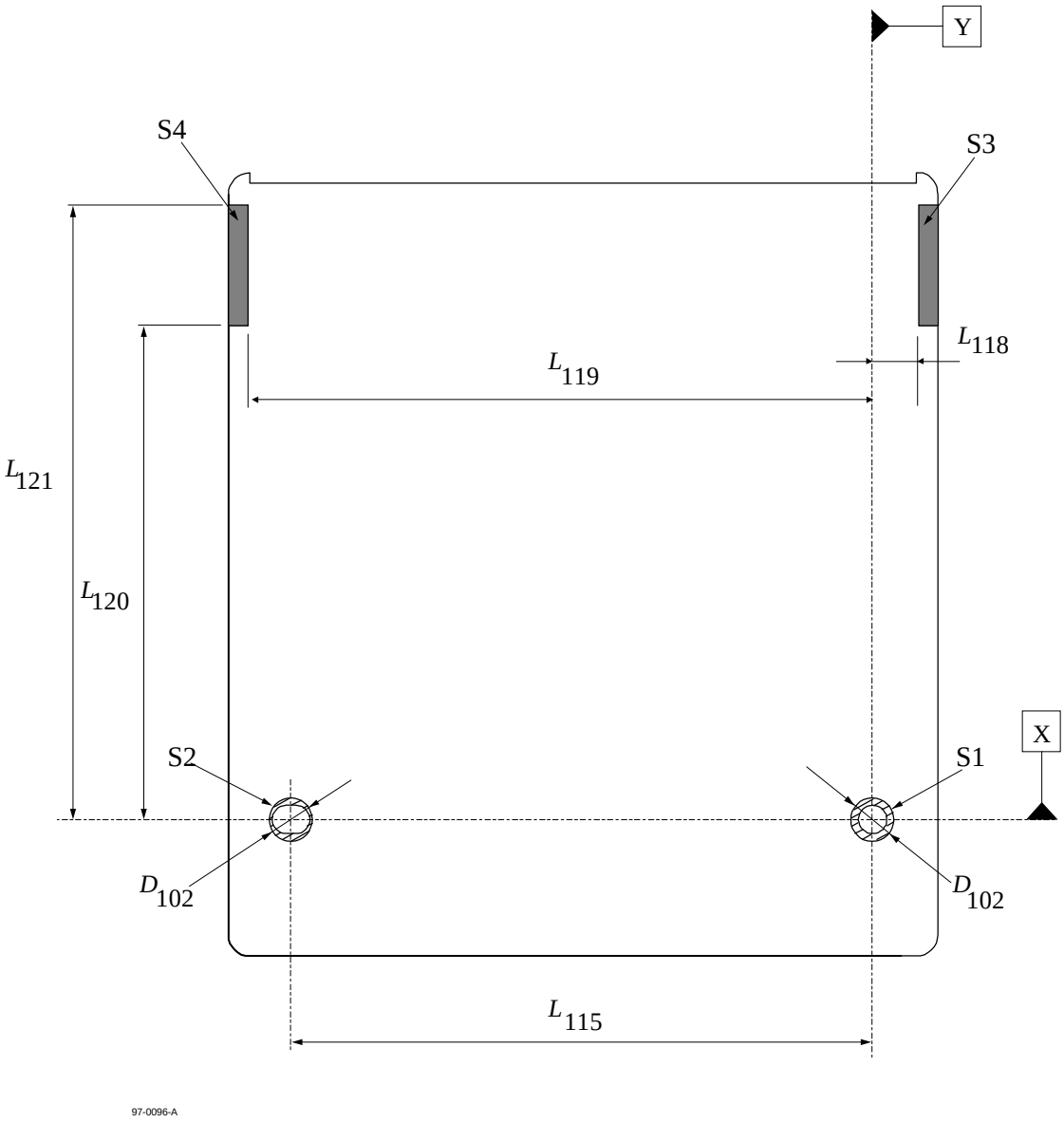

Figure 4 - Reference surfaces

--`,,```,,,,````-`-`,,`,,`,`,,`---
Copyright International Organization for Standardization
Provided by IHS under license with ISO
No reproduction or networking permitted without license from IHS
Not for Resale

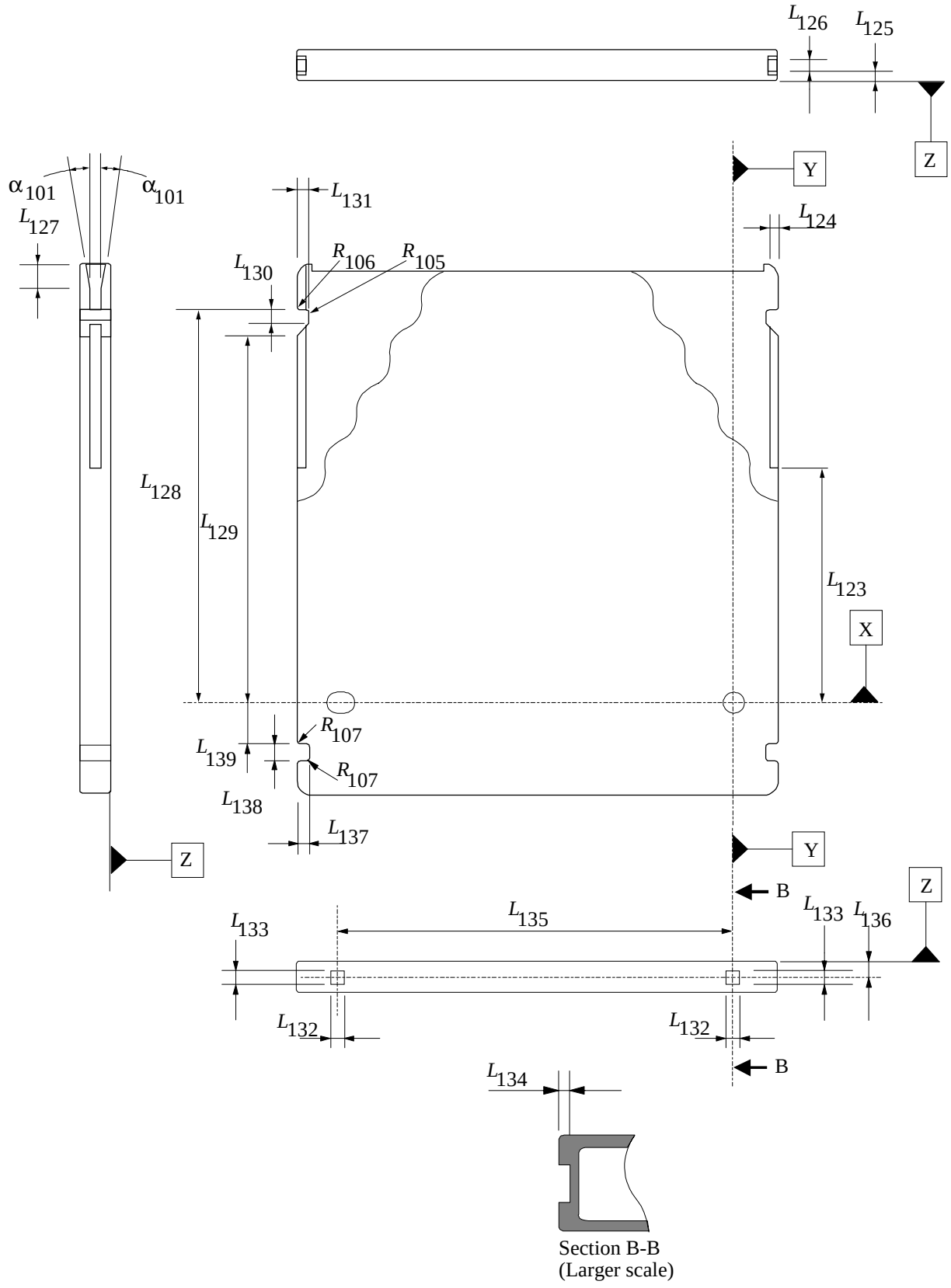

Figure 5 - Insertion slots, detents and gripper slots

Copyright International Organization for Standardization
Provided by IHS under license with ISO
No reproduction or networking permitted without license from IHS
Not for Resale

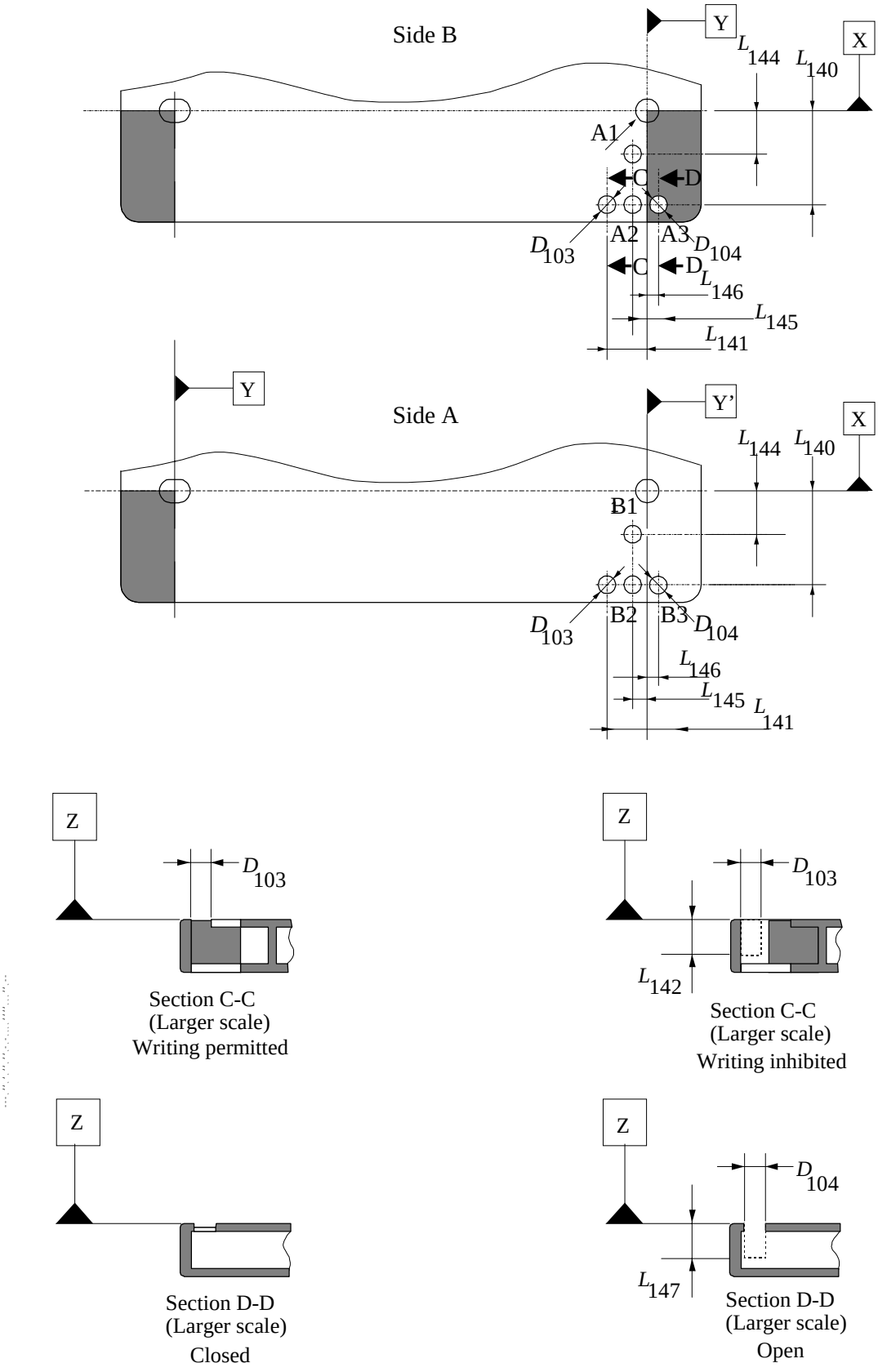

Figure 6 - Write-inhibit hole, sensor holes and sensing areas

Copyright International Organization for Standardization
Provided by IHS under license with ISO
No reproduction or networking permitted without license from IHS
Not for Resale

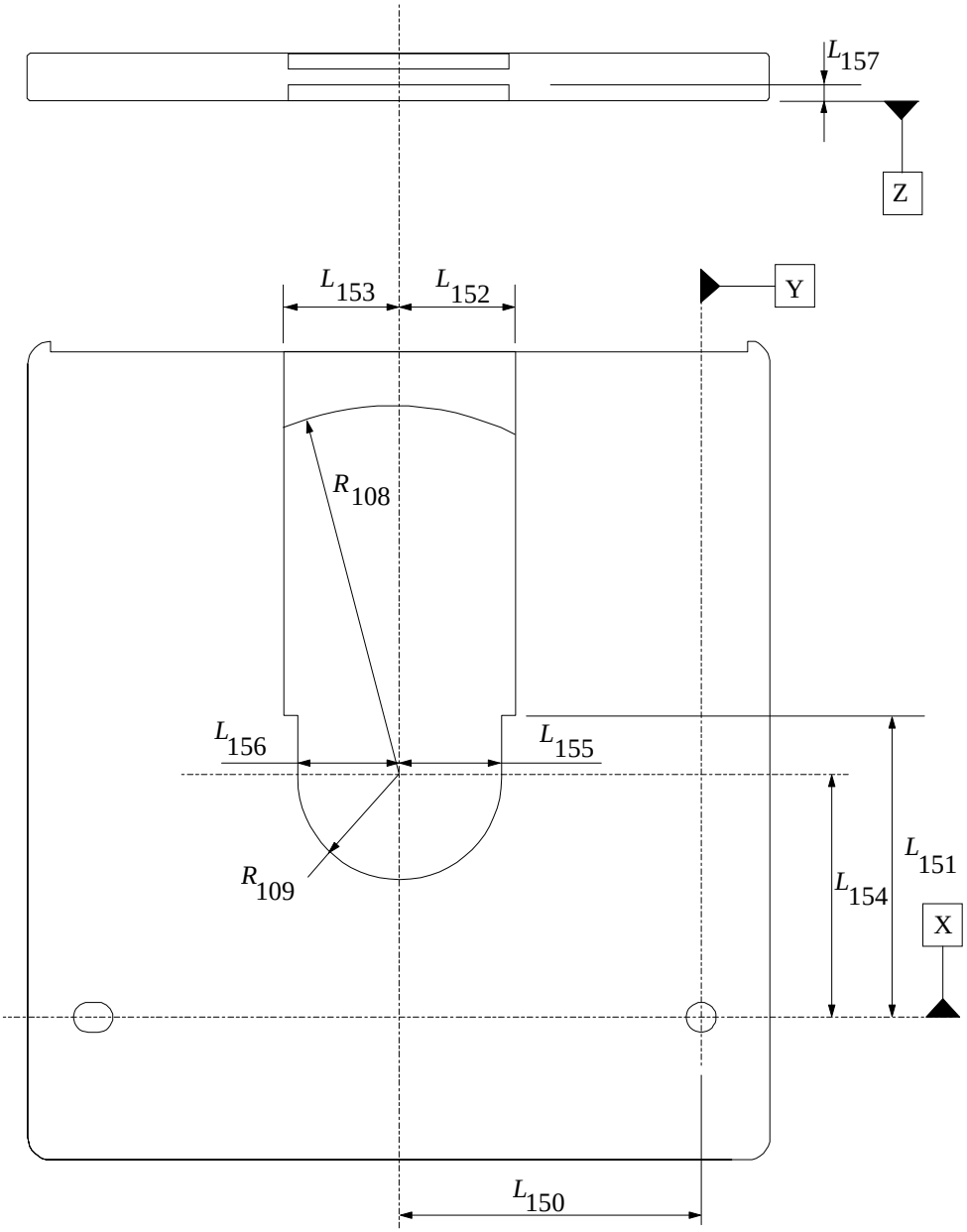

Figure 7 - Spindle and head windows

Copyright International Organization for Standardization
Provided by IHS under license with ISO
No reproduction or networking permitted without license from IHS
Not for Resale

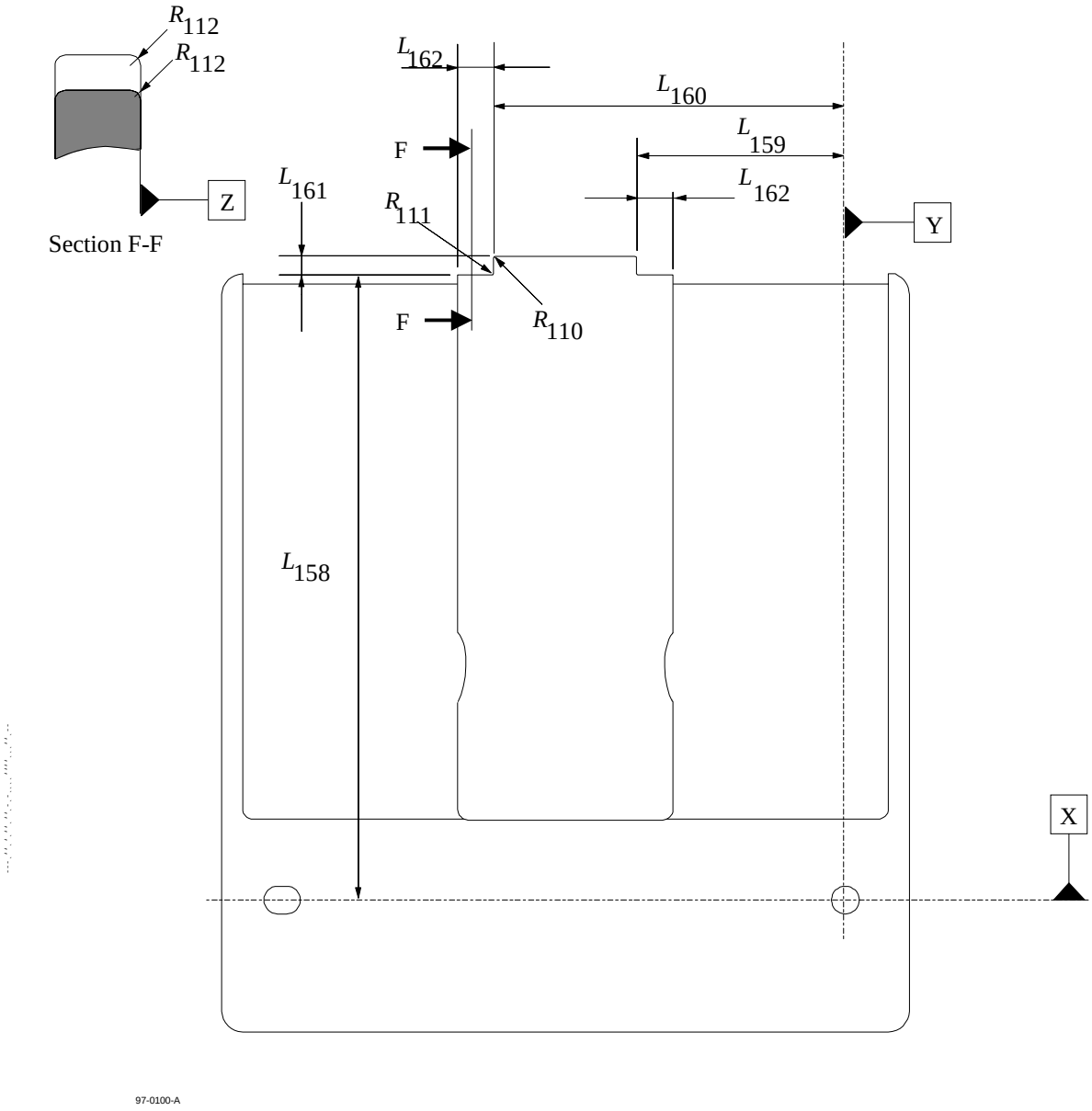

Figure 8 - Shape of the shutter

Copyright International Organization for Standardization
Provided by IHS under license with ISO
No reproduction or networking permitted without license from IHS
Not for Resale

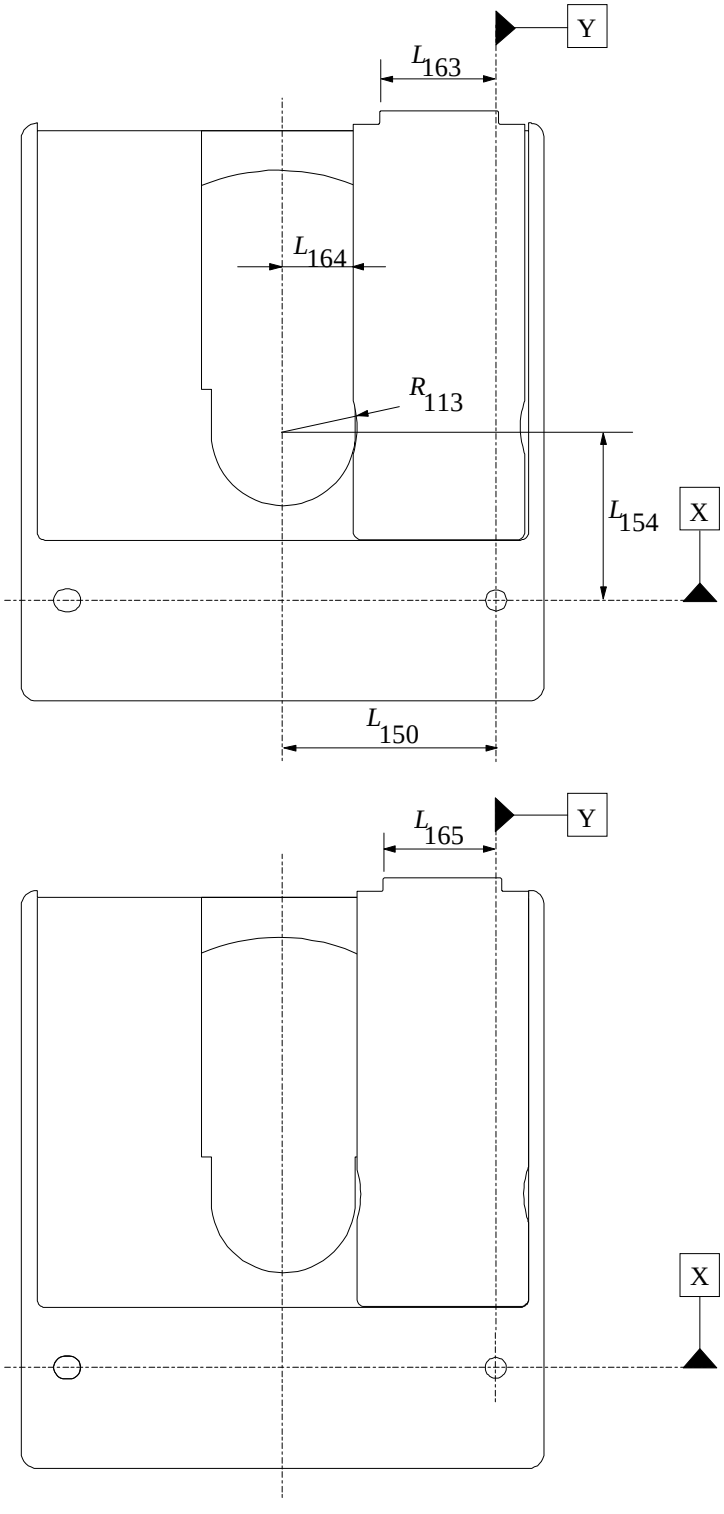

Figure 9 - Shutter in just right-hand open position (top) and maximum right-hand open position (bottom)

Copyright International Organization for Standardization
Provided by IHS under license with ISO
No reproduction or networking permitted without license from IHS
Not for Resale

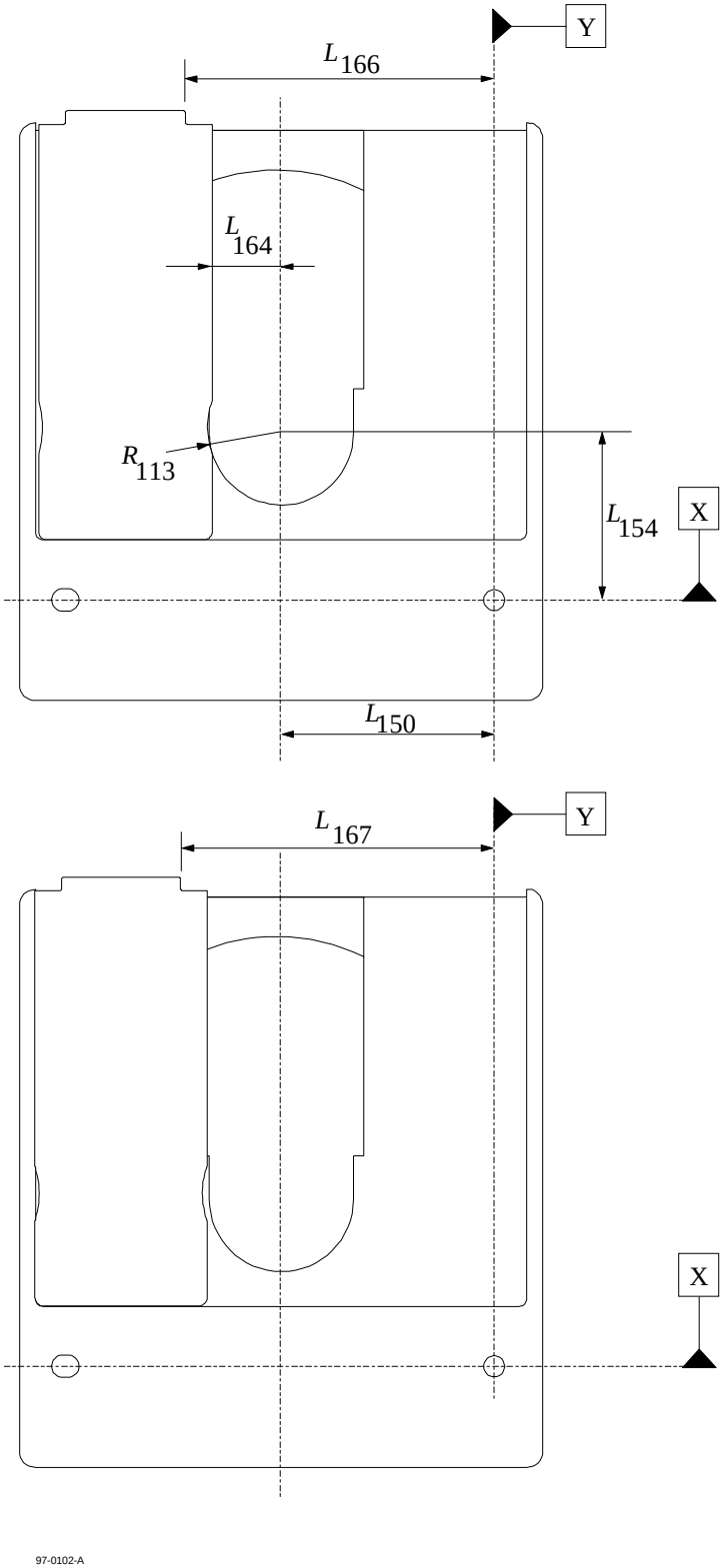

Figure 10 - Shutter in just left-hand open position (top) and maximum left-hand open position (bottom)

Copyright International Organization for Standardization
Provided by IHS under license with ISO
No reproduction or networking permitted without license from IHS
Not for Resale

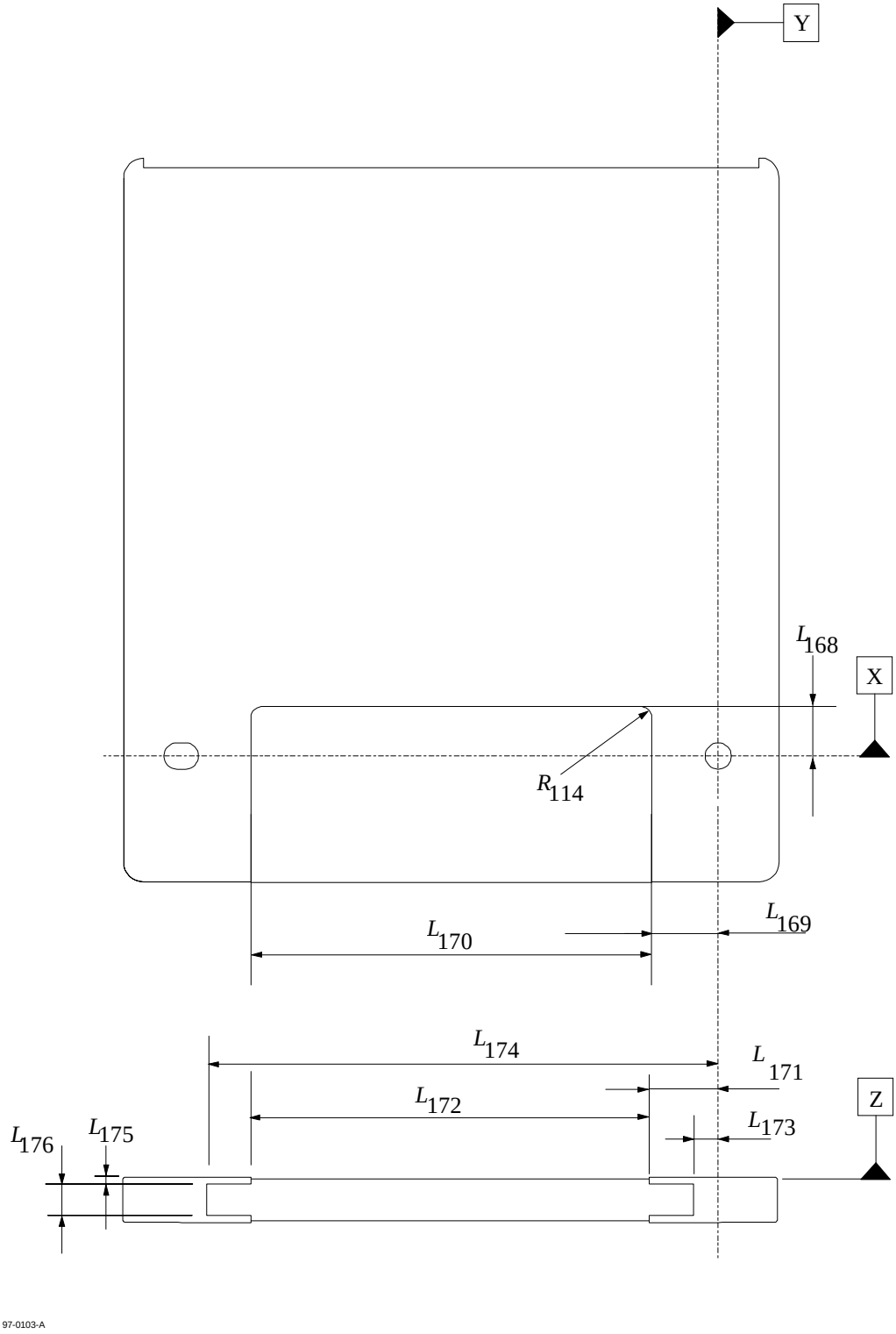

Figure 11 - Label areas

--`,,```,,,,````-`-`,,`,,`,`,,`---

Copyright International Organization for Standardization
Provided by IHS under license with ISO
No reproduction or networking permitted without license from IHS
Not for Resale

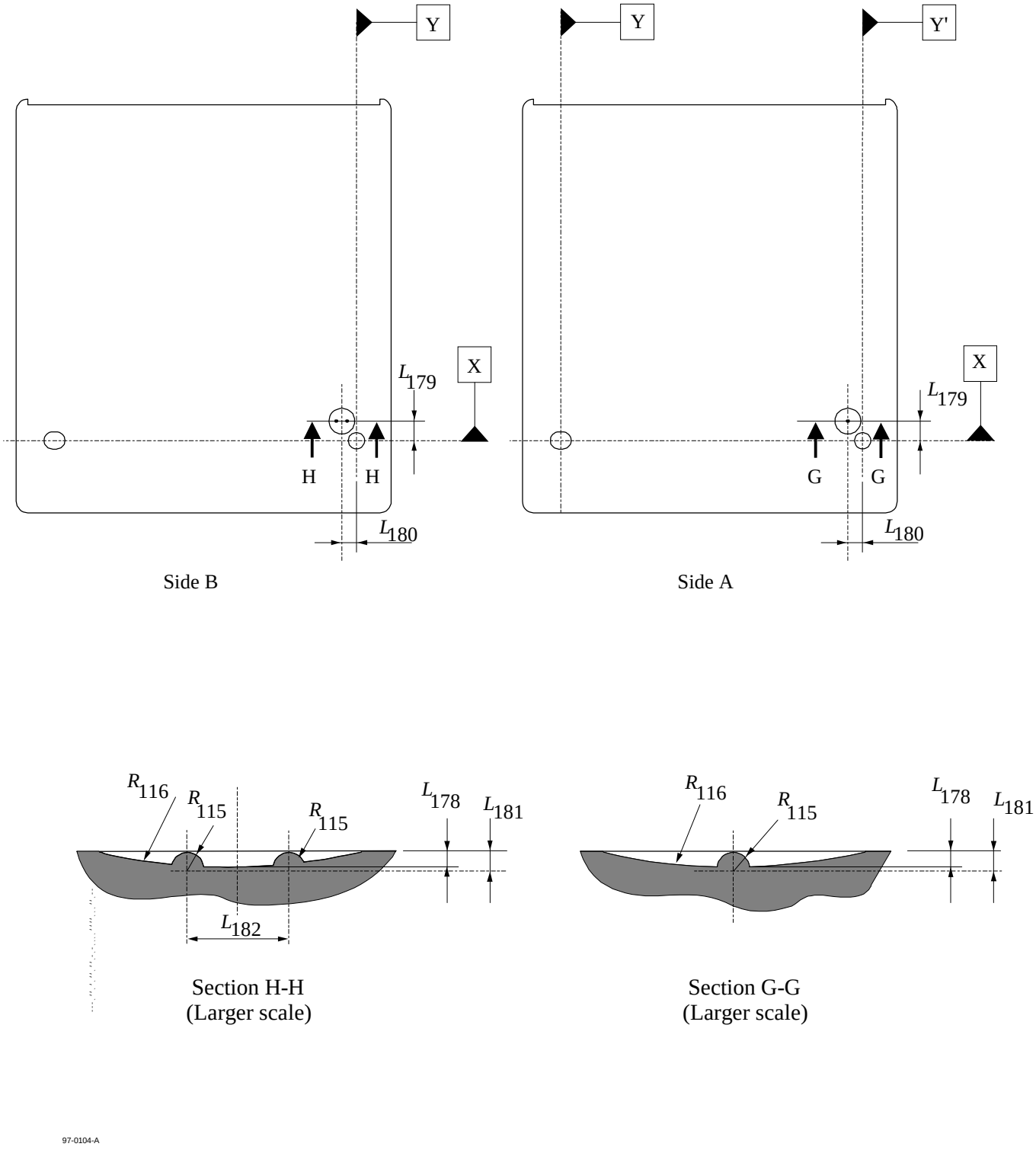

Figure 12 - Identification marks of Side A and B

Copyright International Organization for Standardization
Provided by IHS under license with ISO
No reproduction or networking permitted without license from IHS
Not for Resale

8.2 Dimensions of the Type 2 case

The dimensions of the Type 2 case shall be measured in the test environment (see 7.1.1). The dimensions of the case in an operating environment (see 7.1.2) can be estimated from the dimensions specified in this clause.

8.2.1 Overall dimensions (Figure 13)

The total length of the case shall be

L_{201} = 135,5 mm ± 0,4 mm.

The distance from the top of the case to Reference Plane X shall be

L_{202} = 112,5 mm $^{+\ 0,3\ \text{mm}}_{-\ 0,2\ \text{mm}}$

with the width

L_{203} = 3,6 mm min.

from the left-hand and right-hand edges of the case.

The distance from the bottom of the case to Reference Plane X shall be

L_{204} = 23,0 mm ± 0,2 mm.

The total width of the case shall be

L_{205} = 124,6 mm $^{+\ 0,0\ \text{mm}}_{-\ 0,5\ \text{mm.}}$

The distance from the left-hand side of the case to Reference Plane Y shall be

L_{206} = 113,3 mm $^{+\ 0,2\ \text{mm}}_{-\ 0,4\ \text{mm.}}$

The distance from the right-hand side of the case to Reference Plane Y shall be

L_{207} = 11,3 mm $^{+\ 0,1\ \text{mm}}_{-\ 0,3\ \text{mm.}}$

The two corners of the top shall be rounded with a radius

R_{201} = 4,0 mm ± 0,2 mm

centred at

L_{208} = 4,0 mm ± 0,1 mm

from the edge of the case and

L_{209} = 3,5 mm ± 0,1 mm

from the top of the case.

The two corners of the bottom shall be rounded with a radius

R_{202} = 4,0 mm ± 0,2 mm.

In the zones delimited by

L_{210} = 6,0 mm

from the left-hand and right-hand edges of the case, there shall be the continuous guide areas running from the top to Reference Plane X of the case, with a width

L_{211} = 0,8 mm min.

Copyright International Organization for Standardization
Provided by IHS under license with ISO
No reproduction or networking permitted without license from IHS Not for Resale

the thickness of the case shall be

L_{212} = 8,0 mm $^{+\ 0,2\ mm}_{-\ 0,1\ mm.}$

The eight long edges of the case shall be rounded with a radius

R_{203} = 0,5 mm ± 0,1 mm.

L_{210} and L_{211} shall be defined on Side A as well as Side B.

8.2.2 Location hole (Figure 13)

The centre of the location hole shall coincide with the intersection of Reference Planes X, Y and Z.

The diameter of the hole shall be

D_{201} = 4,00 mm $^{+\ 0,05\ mm}_{-\ 0,00\ mm}$

its depth shall be

L_{213} = 1,2 mm min.

The room below the location hole shall be free up to

L_{214} = 5,0 mm min.

below Reference Plane Z

The diameter of the free room shall be at least equal to D_{201}.

The lead-in edges shall be rounded with a radius

R_{204} = 0,5 mm ± 0,1 mm.

8.2.3 Alignment hole (Figure 13)

The centre of the alignment hole shall lie on the intersection of the Reference Planes X and Z at a distance

L_{215} = 102,0 mm ± 0,2 mm

from Reference Plane Y.

The alignment hole shall have a substantially rectangular shape. Its dimensions shall be

L_{216} = 4,00 mm $^{+\ 0,05\ mm}_{-\ 0,00\ mm}$

L_{217} = 5,6 mm $^{+\ 0,2\ mm}_{-\ 0,0\ mm}$

its depth shall be equal to L_{213}. The room below the alignment hole shall be free up to at least L_{214}. The dimensions of the free room shall be at least L_{216} and L_{217}.

The lead-in edges shall be rounded with a radius R_{204}.

8.2.4 Reference surfaces (Figure 14)

There shall be four reference surfaces S1, S2, S3 and S4 on Side B of the case.

Surfaces S1 and S2 shall be circular with a diameter

D_{202} = 7,0 mm min.

S1 shall be centred on the location hole, and S2 shall be centred on the alignment hole.

Surfaces S3 and S4 shall be rectangular with dimensions

L_{218} = 8,2 mm max.

Copyright International Organization for Standardization
Provided by IHS under license with ISO
No reproduction or networking permitted without license from IHS Not for Resale

L_{219} = 110,2 mm max.

from Reference Plane Y and

L_{220} = 87,0 mm max.

L_{221} = 108,0 mm min.

from Reference Plane X, except in the areas of the detents for autoloading.

8.2.5 Insertion slot (Figure 15)

The case shall have an insertion slot on its right-hand side.

The bottom of the slots shall be at a distance

L_{223} = 60,0 mm ± 0,2 mm

from Reference Plane X.

The depth measured from the edge of the case shall be

L_{224} = 2,0 mm $^{+\ 0,2\ \text{mm}}_{-\ 0,0\ \text{mm.}}$

The side of the insertion slot parallel to Reference Plane Z shall be at a distance

L_{225} = 2,5 mm ± 0,1 mm

from Reference Plane Z. The width of the insertion slot shall be

L_{226} = 3,0 mm $^{+\ 0,2\ \text{mm}}_{-\ 0,0\ \text{mm.}}$

The slots shall have a lead-in slope defined by

L_{227} = 7,0 mm ± 0,2 mm

from the top of the case and an angle

α_{201} = 7,5° ± 1,0°.

8.2.6 Detents (Figure 15)

The case shall have two symmetrical detents intended for autoloading. The detents shall not extend through Side A.

The position and dimensions of the detents are specified by

R_{205} = 0,5 mm max.

L_{228} = 100,5 mm ± 0,3 mm

L_{229} = 93,0 mm ± 0,3 mm

L_{230} = 3,3 mm ± 0,1 mm

L_{231} = 2,5 mm ± 0,1 mm.

The outside edges of the detents shall be rounded off with a radius

R_{206} = 0,5 mm ± 0,1 mm.

The depth of the detents shall be

L_{232} = 6,5 mm ± 0,2 mm.

The bottom of the case shall have two symmetrical detents intended for clamping a cartridge in case of vertical use. Their dimensions shall be

L_{233} = 3,0 mm ± 0,1 mm

L_{234} = 3,0 mm ± 0,1 mm

Copyright International Organization for Standardization
Provided by IHS under license with ISO
No reproduction or networking permitted without license from IHS Not for Resale

L_{235} = 1,0 mm ± 0,1 mm

The centre of one of these detents lies on Reference Plane Y, the centre of the other is at a distance

L_{236} = 102,0 mm ± 0,3 mm

from Reference Plane Y. Both centres are at a distance

L_{237} = 4,0 mm ± 0,1 mm

from Reference Plane Z.

8.2.7 Gripper slots (Figure 15)

The case shall have two symmetrical gripper slots. The slots shall not extend through Side A.

Each slot shall have a depth of

$$L_{238} = 3{,}0 \text{ mm} \begin{matrix} +0{,}3 \text{ mm} \\ -0{,}0 \text{ mm} \end{matrix}$$

from the edge of the case and a width of

$$L_{239} = 4{,}0 \text{ mm} \begin{matrix} +0{,}3 \text{ mm} \\ -0{,}0 \text{ mm.} \end{matrix}$$

The upper edge of the slot shall be at

$$L_{240} = 11{,}0 \text{ mm} \begin{matrix} +0{,}0 \text{ mm} \\ -0{,}3 \text{ mm} \end{matrix}$$

from Reference Plane X.

The corners of the slot shall be rounded off by a radius

R_{207} = 0,5 mm ± 0,2 mm.

The depth of the gripper slots shall be

L_{241} = 6,5 mm ± 0,2 mm.

8.2.8 Write-inhibit hole (Figure 16)

The case shall have a write-inhibit hole on Side B. The write-inhibit hole shall have a device for opening and closing the hole.

When writing and erasing on Side A of the disk are not allowed, the write-inhibit hole shall be open. It shall have a diameter

D_{203} = 3,0 mm min.

The position of its centre shall be specified by

L_{242} = 18,5 mm ± 0,2 mm

L_{243} = 9,0 mm ± 0,2 mm

on Side B of the case.

The hole shall extend below Reference Plane Z by

L_{244} = 5,0 mm min.

with a diameter equal at least to D_{203}.

When writing and erasing of the disk are allowed, the write-inhibit hole shall be closed by the write protect device.

The write protect device shall not be recessed from Reference Plane Z by more than 0,3 mm.

8.2.9 Sensor holes (Figure 16)

The case shall have three sensor holes on Side B. The set of holes on Side B of the case, A1, A2 and A3 pertains to Side A of the disk. The holes shall have a diameter of

Copyright International Organization for Standardization
Provided by IHS under license with ISO
No reproduction or networking permitted without license from IHS Not for Resale

D_{204} = 3,0 mm min.

and the positions of their centres shall be specified by L_{242} and

L_{246} = 7,5 mm ± 0,2 mm

L_{247} = 3,5 mm ± 0,2 mm

L_{248} = 2,0 mm ± 0,2 mm.

The room below the holes shall be free up to

L_{249} = 5,0 mm min.

Reference Plane Z

The diameter of the free room shall be at least equal to D_{204}. The holes are permitted to extend through Side A.

When a hole for Side A of the disk is closed, the closure shall not be recessed from Reference Plane Z by more than 0,3 mm.

The sensor hole A1 shall indicate whether a disk has taken out once or not. The sensor hole A1 shall be originally closed. And once a disk has taken out of the case, this hole shall be opened and never closed again.

The functions of the sensor holes are specified in table 2.

Table 2 - Use of the sensor holes

Sensor hole	Function		Condition
	Closed	Open	
A1	The original disk has not been taken out	The original disk has been taken out, or a disk has been put in	Closed / Open
A2	Active side	Non active side	Closed
A3	Reserved		Closed

8.2.10 Sensing areas (Figure 16)

The case shall have two sensing areas on Side B used by drives for the detection of a cartridge. The first area shall be limited by Reference Planes X and Y, the bottom and the right-side of the case. The second area shall be limited by Reference Plane X, a plane parallel to Reference Plane Y at a distance equal to L_{215}, the bottom and the left-hand side of the case. These areas may be recessed from Reference Plane Z by 0,3 mm max., except for the reference surfaces S1 and S2, the gripper slots and the sensor holes.

8.2.11 Spindle and head windows (Figure 17)

The dimensions of the window are referenced to a centreline, located at a distance

L_{252} = 51,0 mm ± 0,1 mm

from Reference Plane Y. The width of the window from the top of the case to

L_{253} = 50,0 mm max.

shall be

L_{254} = 19,5 mm $^{+\ 0,2\ mm}_{-\ 0,0\ mm}$

and

L_{255} = 19,5 mm $^{+\ 0,2\ mm}_{-\ 0,0\ mm.}$

The top of the window shall be specified by

R_{208} = 60,7 mm min.

--`,,```,,,,````-`-`,,`,,`,`,,`---

Copyright International Organization for Standardization
Provided by IHS under license with ISO
No reproduction or networking permitted without license from IHS Not for Resale

originating from the intersection of L_{250} and

L_{256} = 40,0 mm ± 0,1 mm.

The width of the window from L_{253} to L_{256} shall be given by

L_{257} = 17,0 mm min.

and

L_{258} = 17,0 mm min.

The bottom of the window shall be the arc of the semi-circle which smoothly joins the sides of the window, specified by a radius

R_{209} = 17,0 mm min.

and its centre shall be defined by the intersection of L_{252} and L_{256}.

The area bounded by R_{208} and top of the case shall be recessed from Reference Plane Z by

L_{259} = 2,55 mm min.

L_{260} = 5,65 mm max.

over the width of window.

8.2.12 Shutter shape (Figure 18)

The case shall have a spring-loaded shutter completely covering the spindle and head windows when the case is not inside a drive. The shutter shall be free to slide in a recessed area of the case. The shutter shall not protrude beyond Reference Planes Z or Z' by more than 0,15 mm.

When introduced into a drive, the shutter shall be moved so as to uncover the spindle and head windows. It shall have a pair of guide and edges against which the shutter opening mechanism of the drive can act to open the shutter. The shutter can be shifted rightwards or leftwards.

Both guide edges shall be located at

$$L_{261} = 112{,}0 \text{ mm} \begin{matrix} +\ 0{,}2 \text{ mm} \\ -\ 0{,}4 \text{ mm.} \end{matrix}$$

from Reference Plane X.

When the shutter is closed, the right-hand opener edge shall be at

L_{262} = 38,0 mm ± 0,4 mm

and the left-hand opener edge shall be

L_{263} = 64,0 mm ± 0,4 mm.

from Reference Plane Y.

The depth of each opener edge shall be

$$L_{264} = 3{,}0 \text{ mm} \begin{matrix} +\ 0{,}2 \text{ mm} \\ -\ 0{,}0 \text{ mm} \end{matrix}$$

from L_{261} and the top shall be rounded off with a radius

R_{210} = 0,5 mm max.

The length of the guide edges measured from the corresponding opener edge shall be

L_{265} = 7,0 mm min.

The intersection of the guide edges and the opener edges shall be rounded with a radius

R_{211} = 0,5 mm max.

Copyright International Organization for Standardization
Provided by IHS under license with ISO
No reproduction or networking permitted without license from IHS Not for Resale

Other corners of the guide and opener edges shall be rounded with a radius

R_{212} = 1,0 mm max.

8.2.13 Path for shutter opener (Figure 19 and 20)

When the shutter is moved rightwards until the left opener edge is at a distance

L_{266} = 26,5 mm,

from Reference Plane Y, the windows shall be open over

L_{267} = 16,5 mm min.

from L_{252} and over an arc of

R_{213} = 17,0 mm min.

originating at the intersection of L_{252} and L_{256}.

The left opener edge shall be at

L_{268} = 26,0 mm max.

from Reference Plane Y, when the shutter is in its right-hand end position.

When corresponding the position of the right opener edge is

L_{269} = 75,5 mm,

the windows shall be open at L_{267} from L_{252} and with a radius R_{213} originating at the intersection of L_{252} and L_{256}.

The position of the right opener edge shall be

L_{270} = 76,0 mm min.

when the shutter is in its left-hand end position.

8.2.14 Label area (Figure 21)

The case shall have three label areas on Side A and Side B and on the bottom side, with dimensions

Sides A and B:

L_{271} = 10,0 mm ± 0,2 mm

L_{272} = 13,0 mm ± 0,2 mm

L_{273} = 76,0 mm ± 0,3 mm

R_{214} = 2,0 mm ± 0,2 mm

Bottom:

L_{274} = 13,0 mm ± 0,2 mm

L_{275} = 76,0 mm ± 0,3 mm

L_{276} = 5,0 mm ± 0,2 mm

L_{277} = 97,0 mm ± 0,3 mm

L_{278} = 1,0 mm ± 0,2 mm

L_{279} = 6,0 mm ± 0,2 mm.

The label area shall be recessed by 0,2 mm min. on all three sides.

8.2.15 Identification mark for Side A (Figure 22)

Side A shall be identified by an identification mark consisting of a small round projection provided in a concave part on the right-hand side of Side A. The position and dimensions of this identification mark shall be as follows.

R_{215} = 0,5 $^{+ 0,1 \text{ mm}}$

Copyright International Organization for Standardization
Provided by IHS under license with ISO
No reproduction or networking permitted without license from IHS Not for Resale

$^{0}_{-0,0\ mm}$

R_{216} = 18,0 mm ± 1,0 mm

$L_{281} = 0{,}5\ mm\ ^{+0,1\ mm}_{-0,0\ mm}$

L_{282} = 7,0 mm ± 0,3 mm

L_{283} = 5,0 mm ± 0,3 mm

$L_{284} = 0{,}6\ mm\ ^{+0,1\ mm}_{-0,0\ mm}$

8.2.16 Opening and opening cover for taking the disk out of the case

Type 2 case shall have an opening closed by a cover. In the original condition the case contains a disk and the cover is locked in closed position. Sensor hole A1 shall be closed. In order to take out the disk, sensor hole A1 shall be opened, then the cover can be opened and the disk removed from the case. Once sensor hole A1 has been opened, it always remains open whether or not the same disk or an other disk has been introduced into the case.

This International Standard does not specify the design of the opening and of the cover. They should be designed so as not to damage the disk. An example of a cover is shown in annex D.

Copyright International Organization for Standardization
Provided by IHS under license with ISO
No reproduction or networking permitted without license from IHS Not for Resale

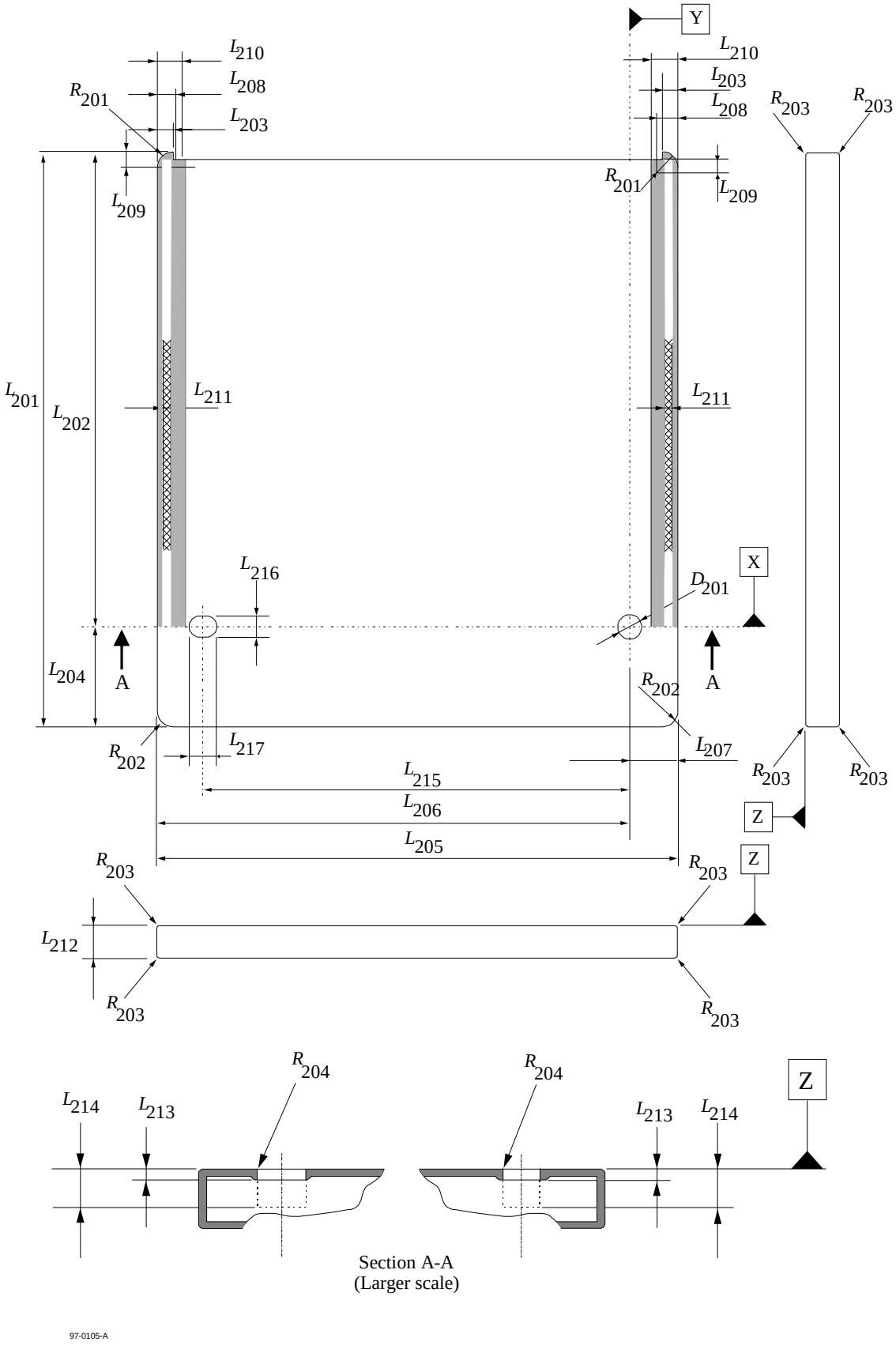

Figure 13 - Overall dimensions

Copyright International Organization for Standardization
Provided by IHS under license with ISO
No reproduction or networking permitted without license from IHS
Not for Resale

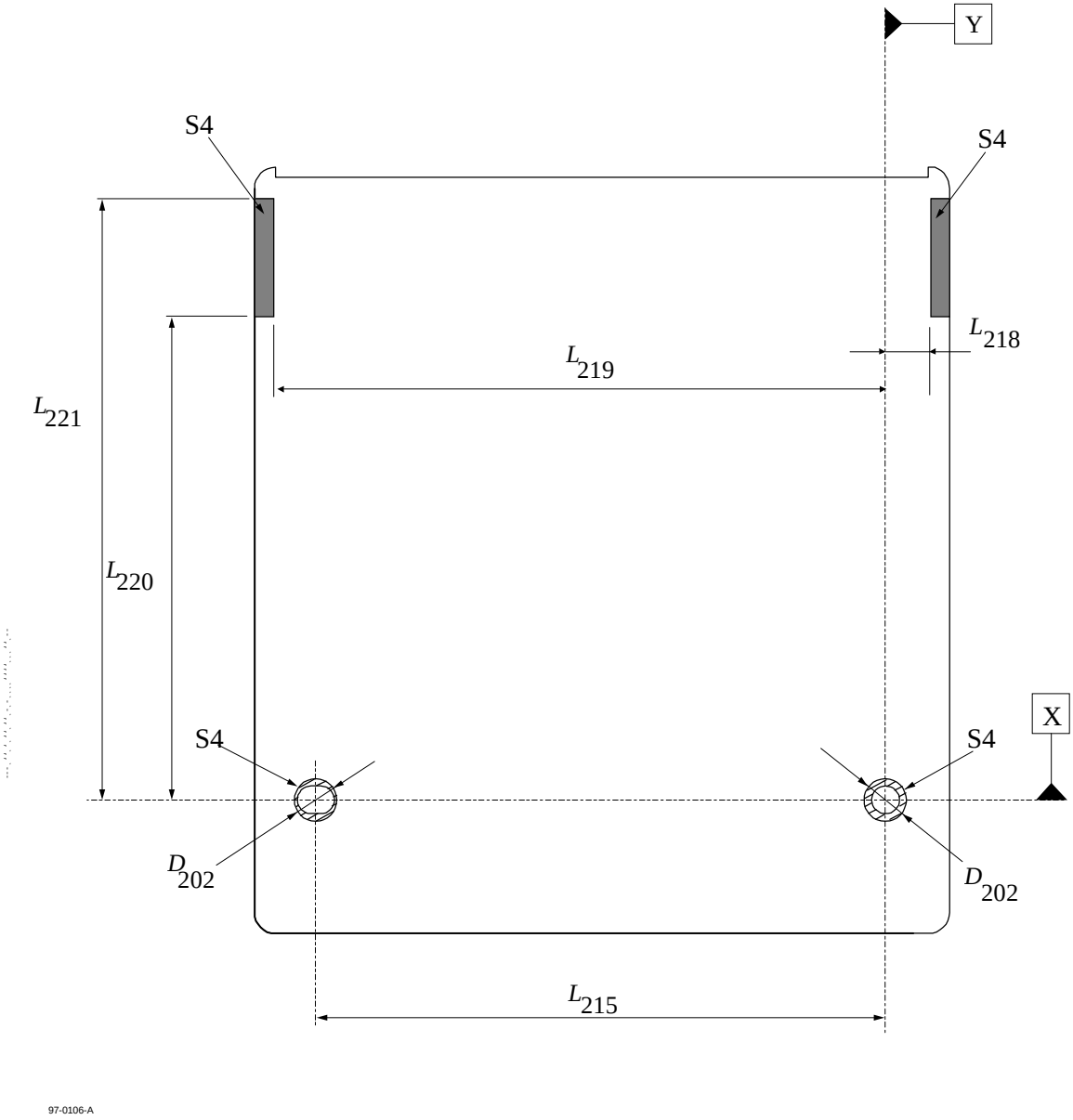

Figure 14 - Reference surfaces

Copyright International Organization for Standardization
Provided by IHS under license with ISO
No reproduction or networking permitted without license from IHS
Not for Resale

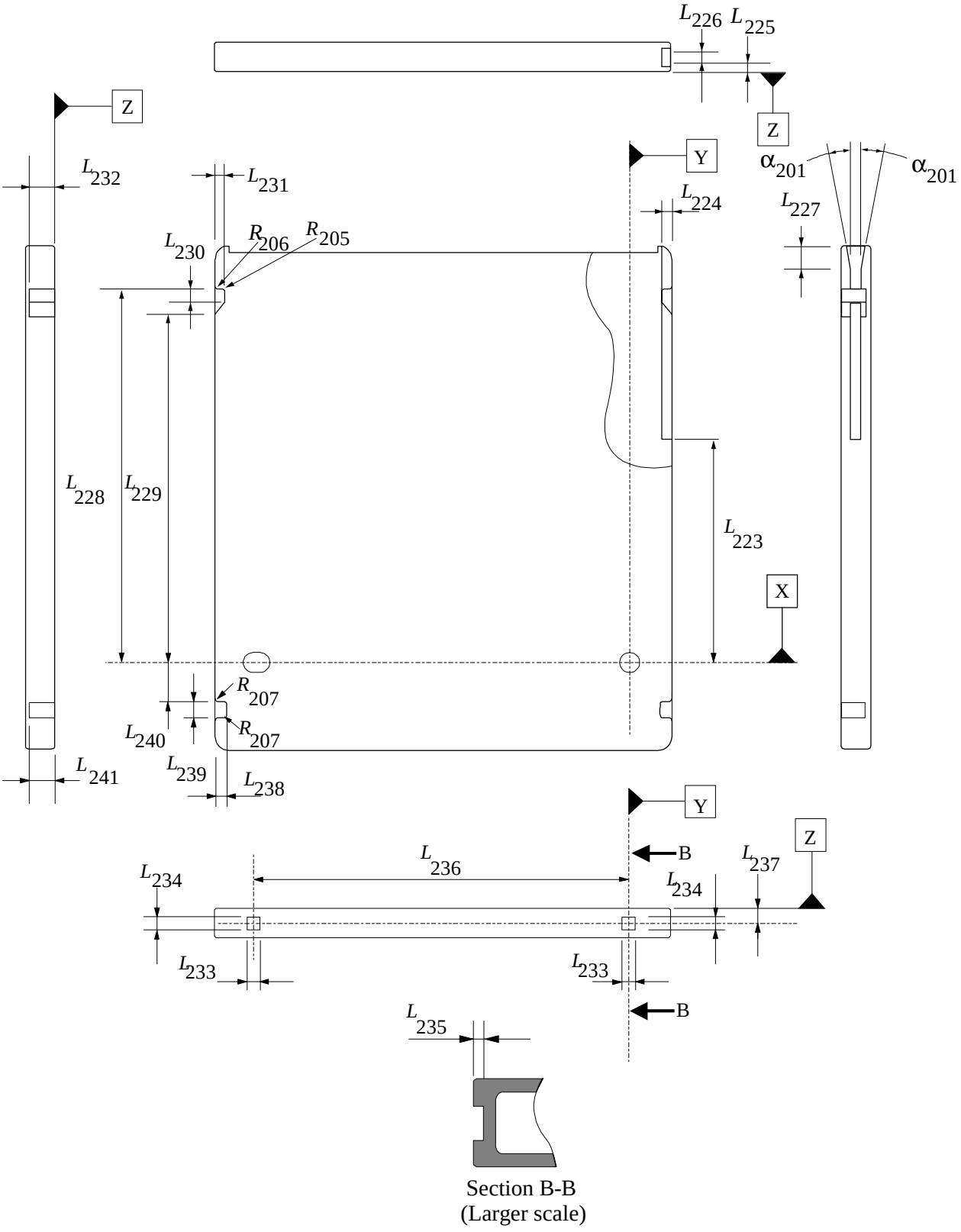

Figure 15 - Insertion slot, detents and gripper slots

Copyright International Organization for Standardization
Provided by IHS under license with ISO
No reproduction or networking permitted without license from IHS
Not for Resale

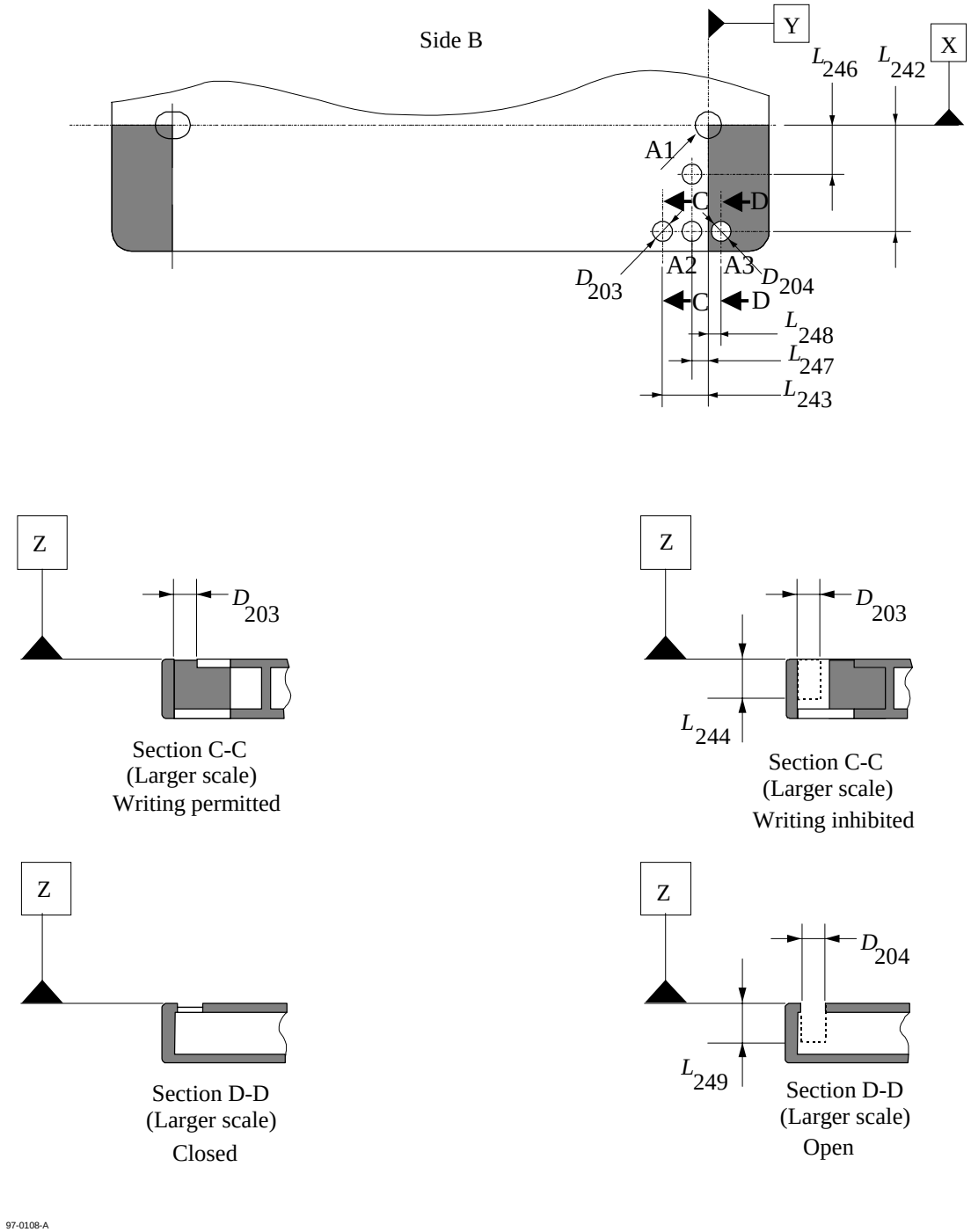

Figure 16 - Write-inhibit hole, sensor holes and sensing areas

Copyright International Organization for Standardization
Provided by IHS under license with ISO
No reproduction or networking permitted without license from IHS
Not for Resale

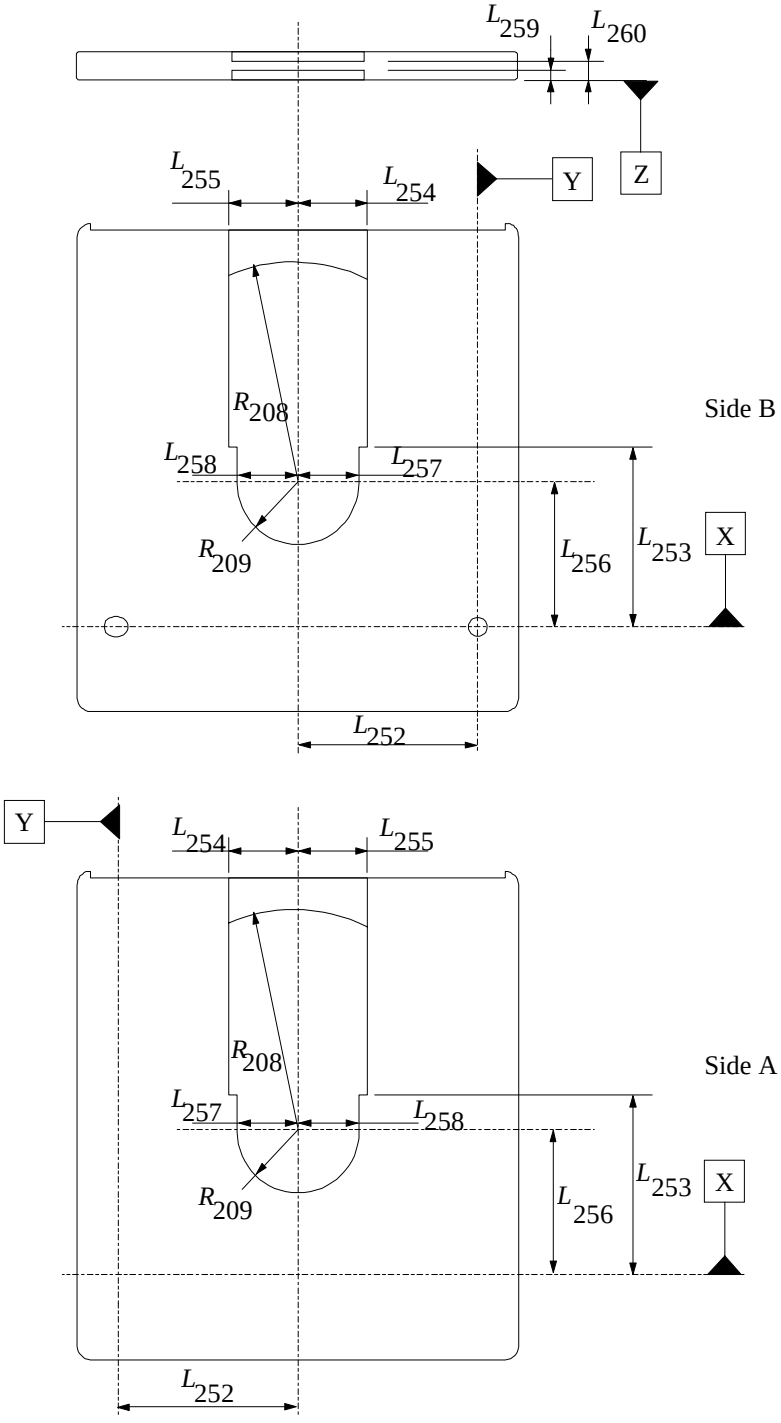

97-0109-A

Figure 17 - Spindle and head windows

Copyright International Organization for Standardization
Provided by IHS under license with ISO
No reproduction or networking permitted without license from IHS
Not for Resale

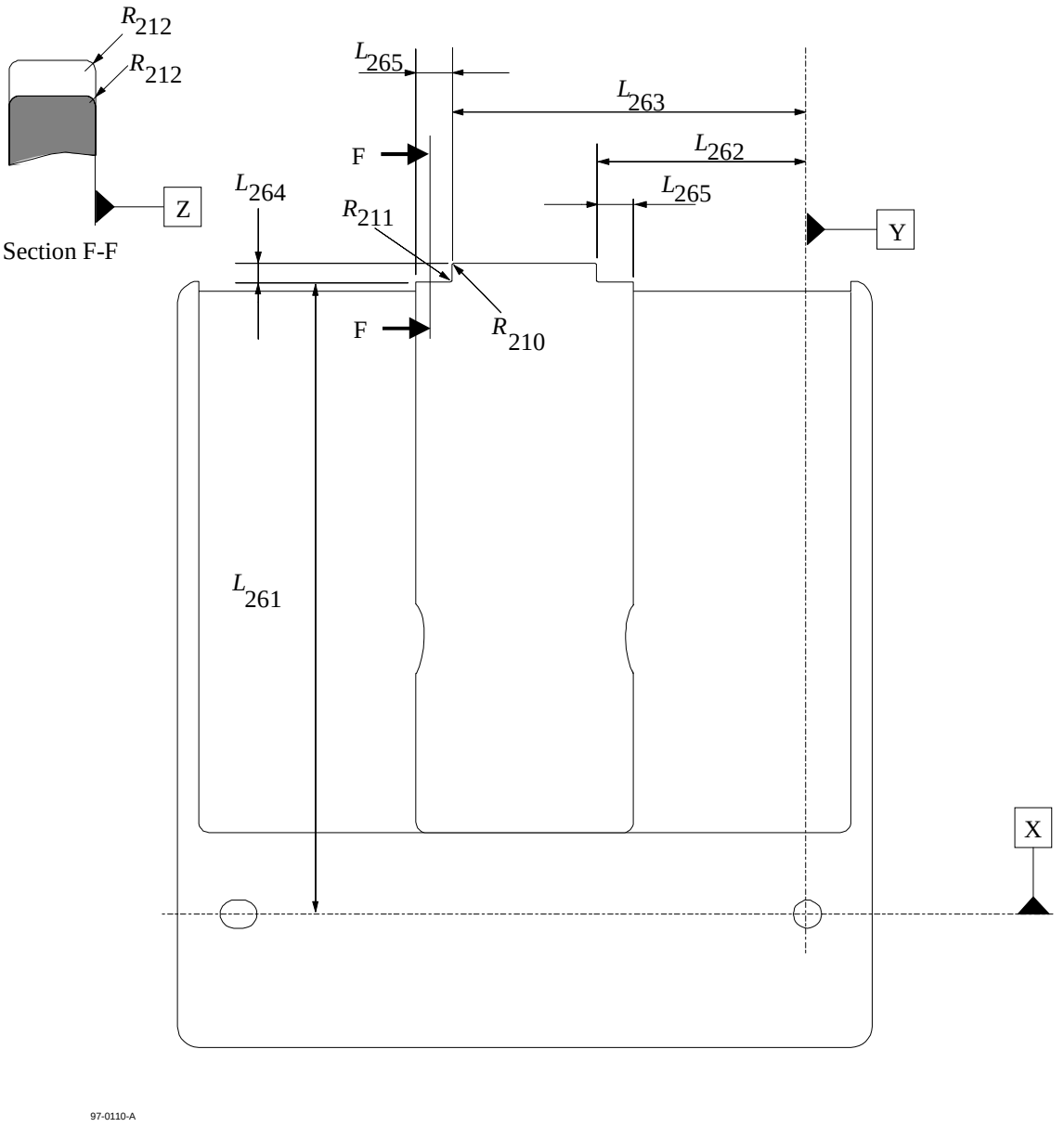

Figure 18 - Shape of the shutter

Copyright International Organization for Standardization
Provided by IHS under license with ISO
No reproduction or networking permitted without license from IHS
Not for Resale

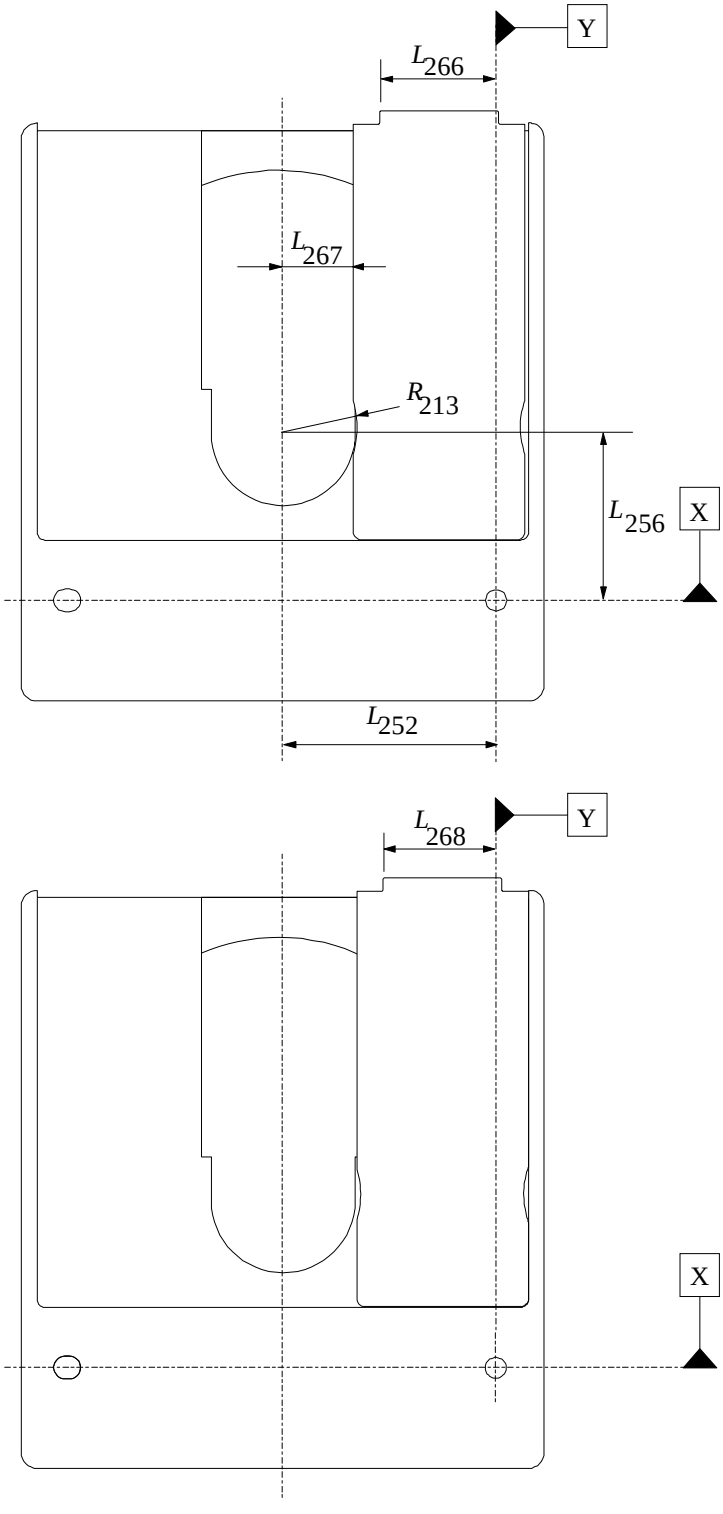

97-0111-A

Figure 19 - Shutter in just right-hand open position (top) and maximum right-hand open position (bottom)

Copyright International Organization for Standardization
Provided by IHS under license with ISO
No reproduction or networking permitted without license from IHS
Not for Resale

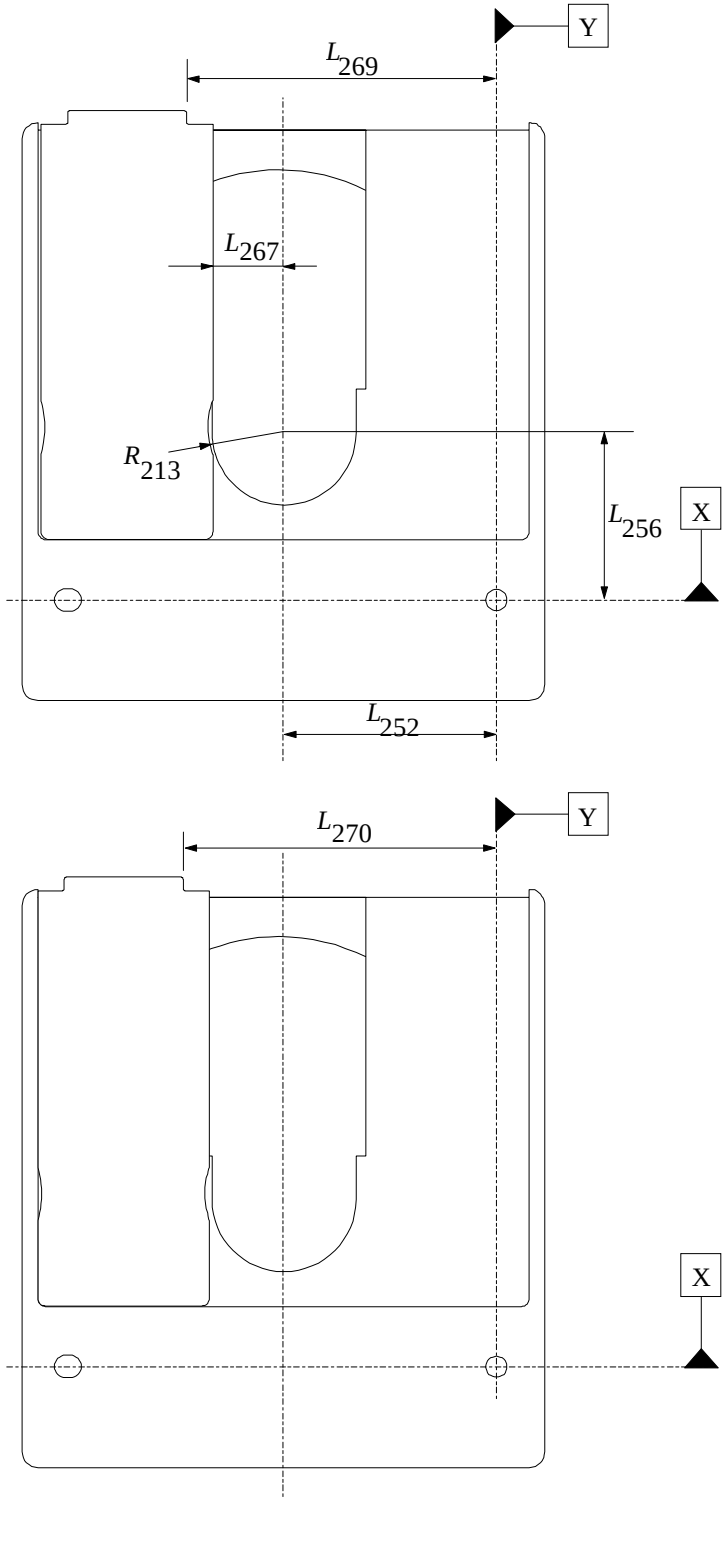

Figure 20 - Shutter in just left-hand open position (top) and maximum left-hand open position (bottom)

--`,,```,,,,````-`-`,,`,,`,`,,`---
Copyright International Organization for Standardization
Provided by IHS under license with ISO
No reproduction or networking permitted without license from IHS
Not for Resale

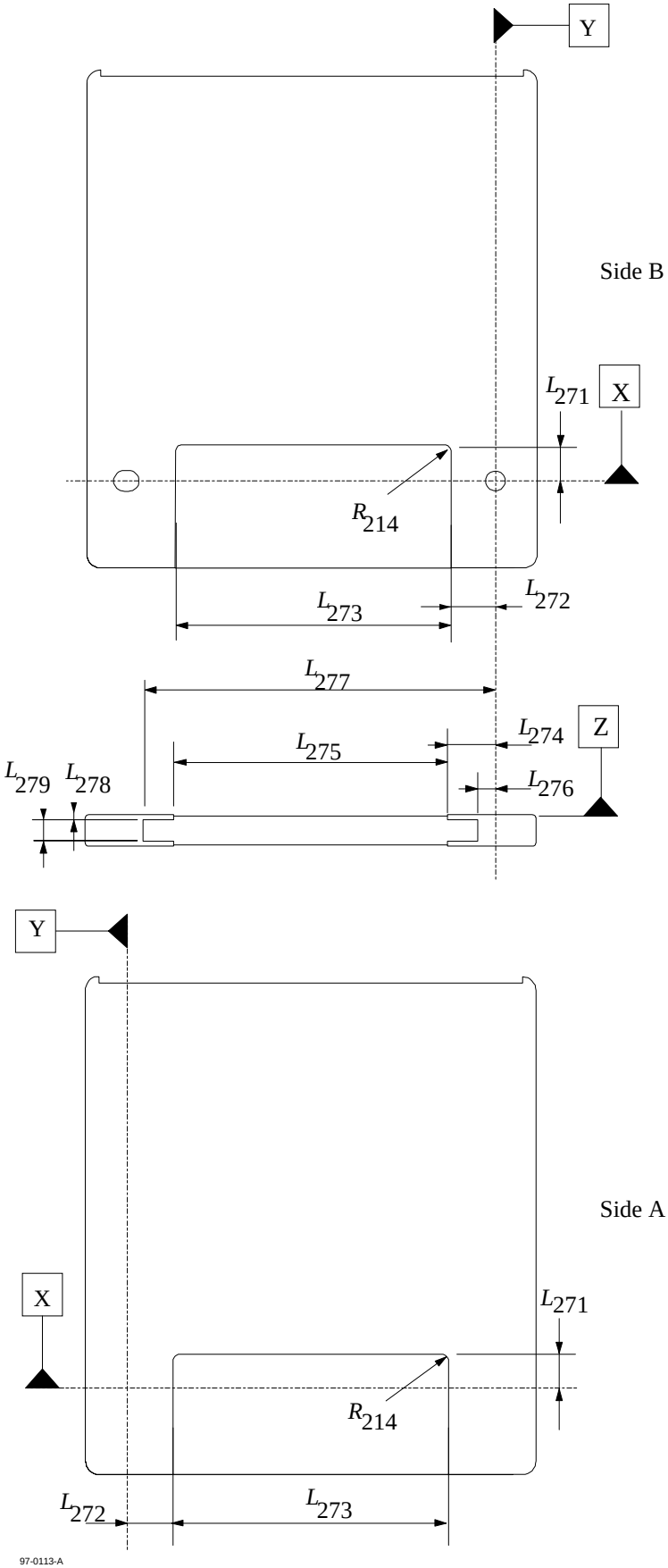

Figure 21 - Label areas

Copyright International Organization for Standardization
Provided by IHS under license with ISO
No reproduction or networking permitted without license from IHS
Not for Resale

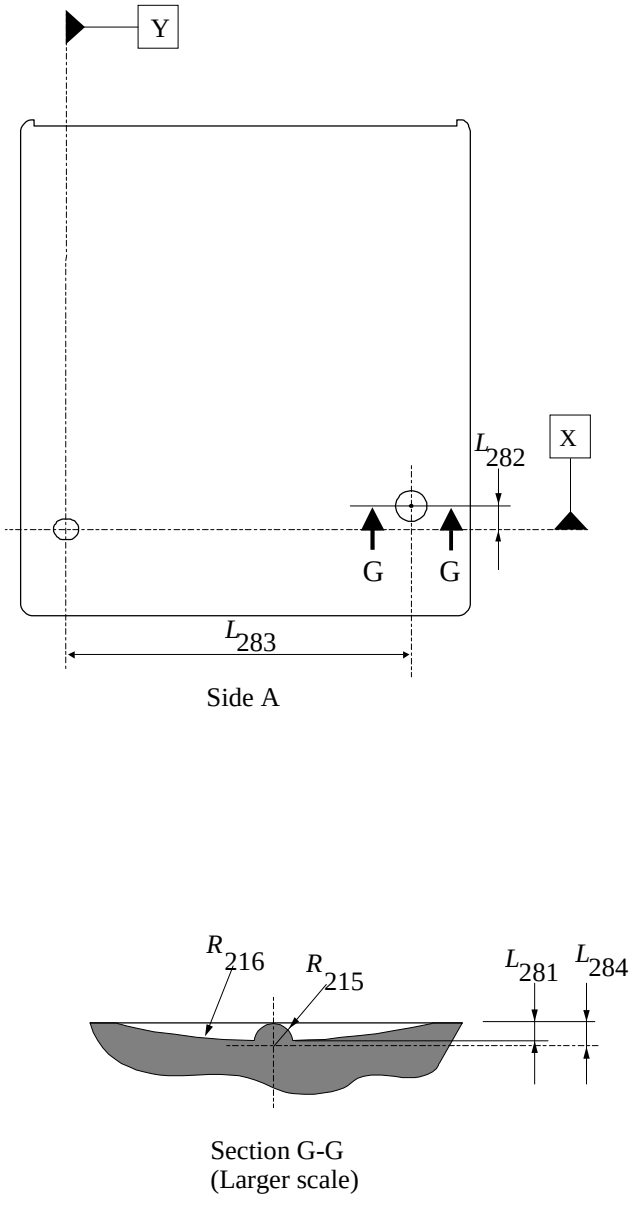

Figure 22 - Identification mark of Side A

8.3 Dimensions of the Type 3 case

The dimensions of the Type 3 case shall be measured in the test environment (see 7.1.1). The dimensions of the case in an operating environment (see 7.1.2) can be estimated from the dimensions specified in this clause.

The dimensions of the case are identical with those of the Type 2 case. See 8.2.

The following clauses specify different features from the Type 2 case.

Copyright International Organization for Standardization
Provided by IHS under license with ISO
No reproduction or networking permitted without license from IHS
Not for Resale

8.3.1 Sensor holes

The functions of the sensor holes are specified in table 3.

Table 3 - Use of the sensor holes

Sensor hole	Function		Condition
	Closed	Open	
A1	Not applicable	There may or may not be a disk within the case	Open
A2	Active side	Non active side	Closed
A3	Reserved		Closed

8.3.2 Opening and opening cover

The case shall have an opening and an opening cover for taking a disk out or putting one in. The opening cover can be opened and closed freely.

A sample of an opening cover is shown in annex D.

9 Mechanical characteristics

9.1 Material

The case shall be constructed from any suitable materials such that it meets the requirements of this International Standard.

9.2 Mass

The mass of the case without the disk shall not exceed 100 g.

9.3 Edge distortion

The cartridge shall meet the requirement of the edge distortion test defined in annex B.

9.4 Compliance

The case shall meet the requirement of the compliance (flexibility) test defined in annex C.

9.5 Shutter opening force

The spring force on the shutter shall be such that the force required to open the shutter does not exceed 2,0 N. It shall be sufficiently strong to close a free-sliding shutter, irrespective of the orientation of the case.

10 Interface between the case used as cartridge and a drive

10.1 Capture cylinder (Figure 23)

The capture cylinder is defined as the volume within which the spindle can expect the centre of the disk hole to be, just prior to capture, and with the cartridge constrained as specified in 9.4. The size of the cylinder defines the permissible play of the disk inside its cavity in the case. The cylinder is referred to perfectly located and perfectly sized alignment and location pins in the drive; it includes the tolerances of those dimensions of the case and the disk which are between the two pins mentioned and the centre of the disk.

The bottom of the cylinder shall be parallel to Reference Plane Z, and shall be located at a distance

L_{301} = 2,1 mm min.

above Reference Plane Z. The top of the cylinder is located at a distance

L_{302} = 5,2 mm max.

from Reference Plane Z. The diameter of the cylinder shall be

D_{301} = 2,8 mm max.

--`,,```,,,,````-`-`,,`,,`,`,,`---

Copyright International Organization for Standardization
Provided by IHS under license with ISO
No reproduction or networking permitted without license from IHS Not for Resale

and its centre shall be given by the nominal values of L_{150} and L_{154} of Type 1 case, or L_{254} and L_{258} of Type 2 and or Type 3 cases, in the drive.

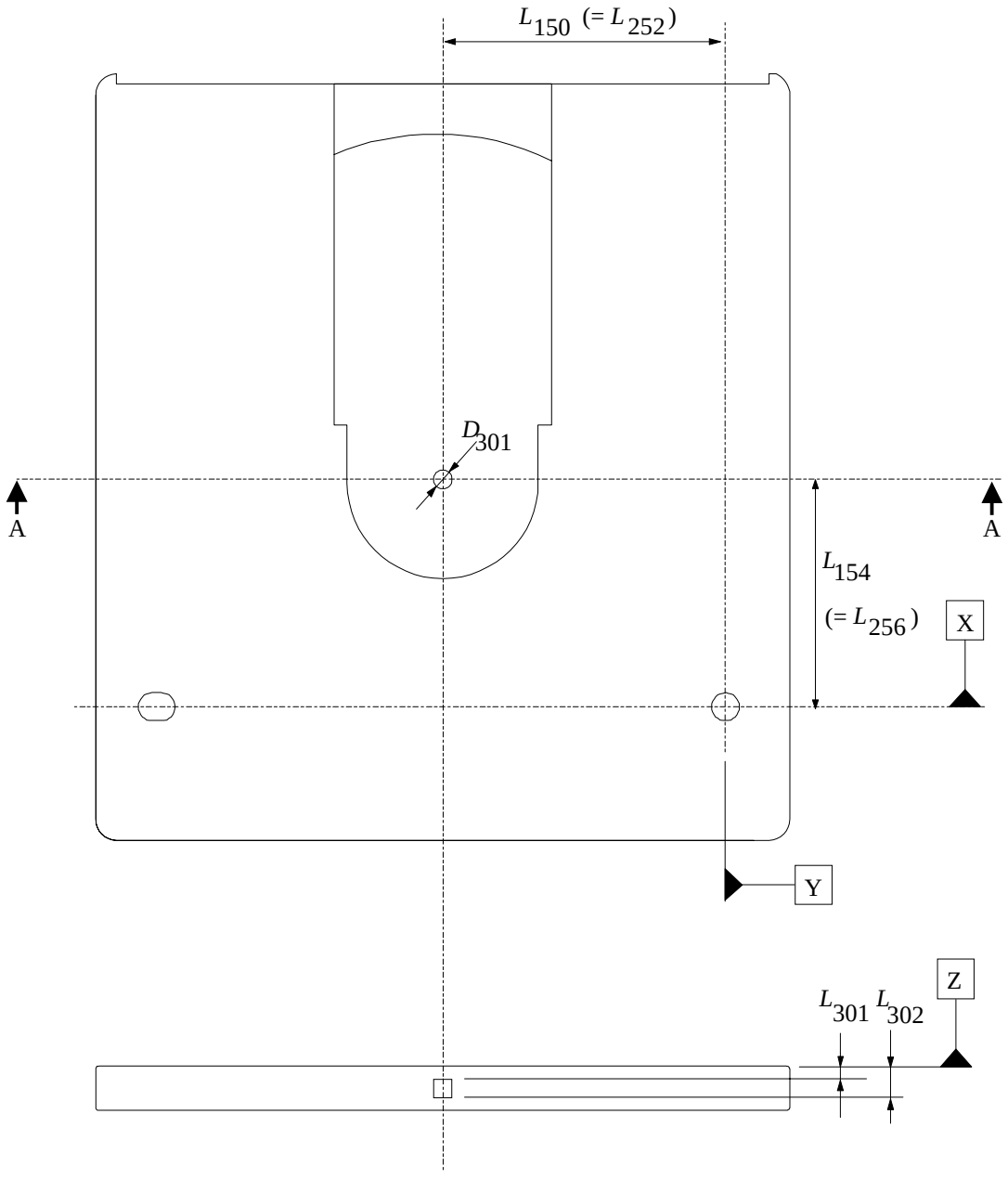

Figure 23 - Capture cylinder

10.2 Inner dimensions of the case (Figure 24)

The inner space of the disk shall be such that the disk is not in contact with the case during operation. The inner shape of the case shall meet the following requirements.

L_{303} = 2,2 mm max.

L_{304} = 2,5 mm max.

Copyright International Organization for Standardization
Provided by IHS under license with ISO
No reproduction or networking permitted without license from IHS
Not for Resale

L_{305} = 5,4 mm min.

L_{306} = 5,7 mm min.

measured from Reference Plane Z and

R_{301} = 22,0 mm max.

R_{302} = 60,7 mm min.

from a centre given by the nominal values of L_{150} and L_{154} of Type 1 case, or L_{254} and L_{258} of Type 2 and Type 3 cases.

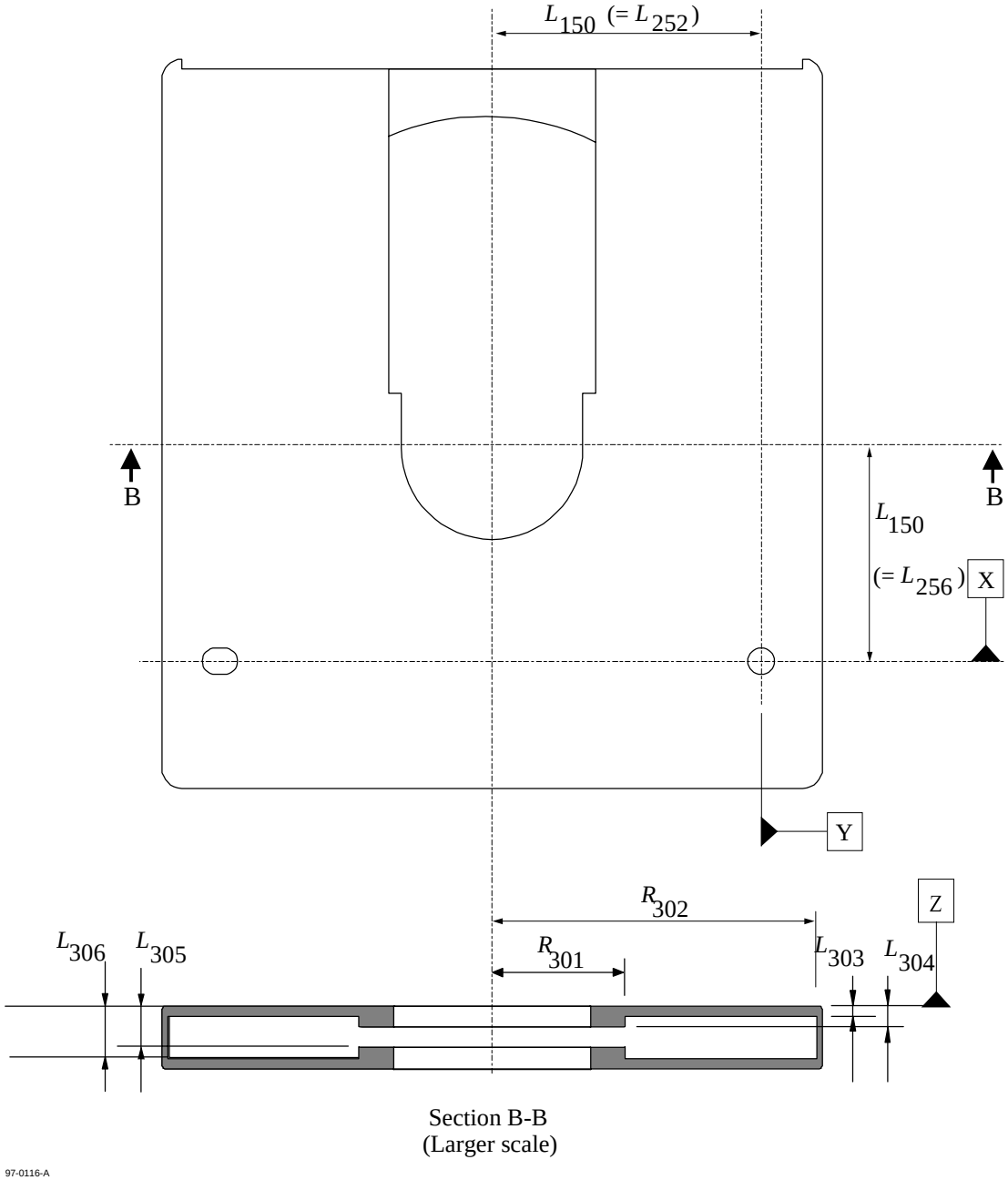

Figure 24 - Inner dimensions of the case

Copyright International Organization for Standardization
Provided by IHS under license with ISO
No reproduction or networking permitted without license from IHS
Not for Resale

11 Orientation of the disk in the case

11.1 Two-sided disk (Type 2S) in case Type 1

The disk surfaces are defined as Side A and Side B. Sides A and B of the case are identical as far as the features specified in this International Standard are concerned. The two-sided disk (Type 2S) has no specific orientation in the case. Therefore, references to Sides A and B of the case can be changed to B and A respectively.

11.2 One-sided disk (Type 1S) in case Types 1, 2 and 3

A one-sided disk (Type 1S) has only one functional entrance surface defined as Side A. The disk shall be oriented in the case so that when Side A of the case faces upwards, Side A of the disk faces downwards.

Copyright International Organization for Standardization
Provided by IHS under license with ISO
No reproduction or networking permitted without license from IHS Not for Resale

Annex A

(normative)

Position of the case relative to the Reference Planes

This annex shows the position of the case relative to the Reference Planes, as specified in 7.1.2.

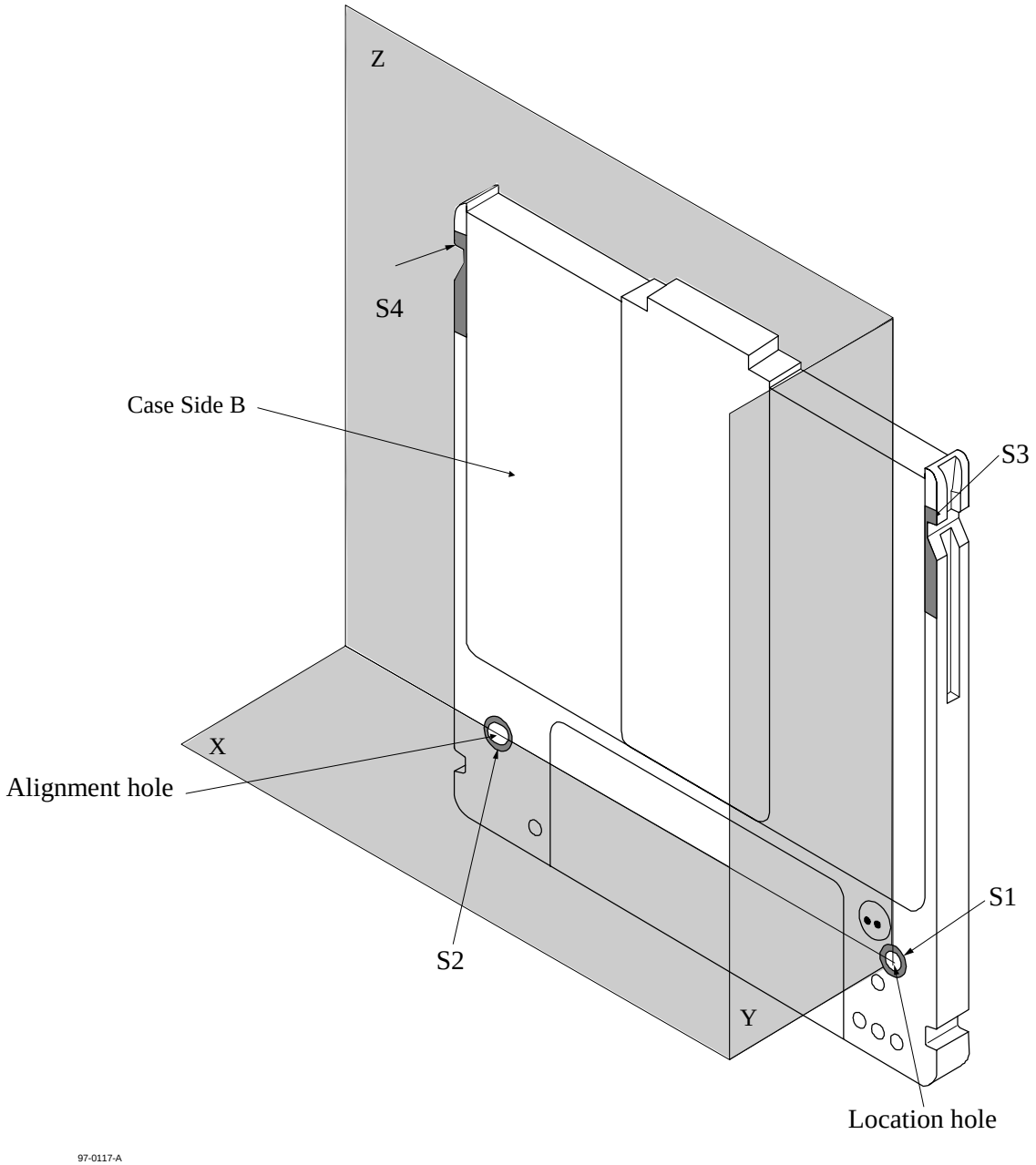

Figure A.1 - Position of the case

Copyright International Organization for Standardization
Provided by IHS under license with ISO
No reproduction or networking permitted without license from IHS
Not for Resale

Annex B

(normative)

Edge distortion test

The distortion test checks if the case is free from unacceptable distortions and protrusions along its edges. The test is made by causing the cartridge to pass through the vertical slot of a gauge.

B.1 Test gauge specification

The gauge shall be made of a suitable material, e.g. of chrome-plated carbon steel. The inner surfaces shall be polished to a surface finish of 5 µm peak-to-peak.

The dimensions shall be as follows (figure B.1):

L_a = 136,0 mm min.

L_b = 125,0 mm ± 0,1mm

L_c = 8,0 mm ± 0,1mm

L_d = 8,30 mm ± 0,02mm

L_e = 8,8 mm min.

B.2 Requirements

When the cartridge is inserted vertically into the gauge, a vertical force F_1 of 1,5 N maximum (without the cartridge weight) applied to the centre of the top edge of the cartridge shall cause the cartridge to pass through the gauge.

Copyright International Organization for Standardization
Provided by IHS under license with ISO
No reproduction or networking permitted without license from IHS
Not for Resale

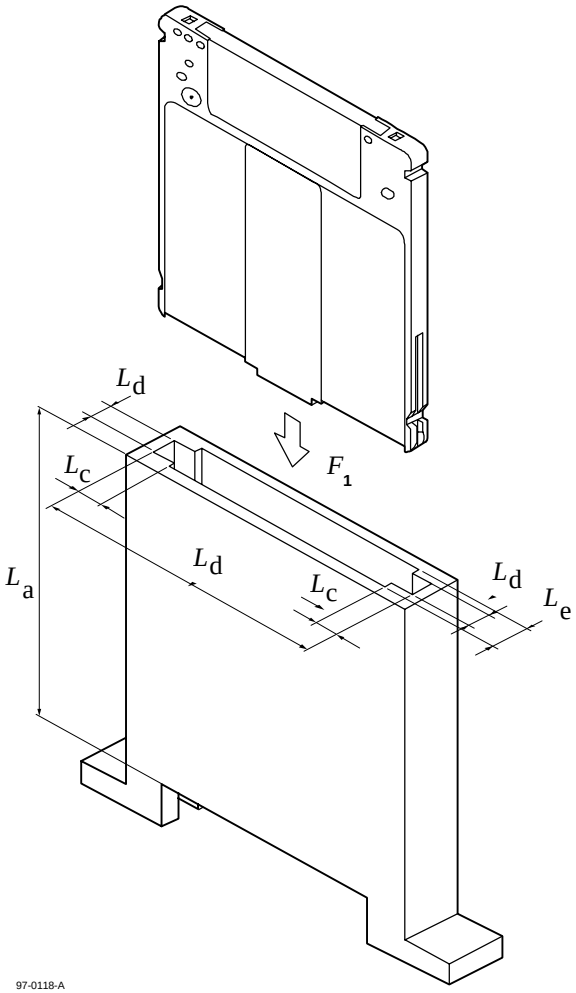

Figure B.1 - Distortion gauge

Copyright International Organization for Standardization
Provided by IHS under license with ISO
No reproduction or networking permitted without license from IHS
Not for Resale

Annex C

(normative)

Compliance test

The compliance test checks the flatness and flexibility of the case by forcing the four reference surfaces of the case into a plane. The test is made by placing the cartridge on the supports of a gauge and applying forces on the cartridge opposite to the supports.

C.1 Test gauge specification

The test gauge consists of a base plate on which four posts P_1, P_2, P_3 and P_4 are fixed so as to correspond to the four surfaces S1, S2, S3 and S4, respectively (figure C.1]). The location of the four reference surfaces S1, S2, S3 and S4 is defined in 8.1.4 (figure 4) or 8.2.4 (figure 14).

The dimensions are as follows (figure C.2):

Posts P_1 and P_2

D_a = 6,50 mm ± 0,01 mm

D_b = 3,90 mm $^{+\ 0,02\ mm}_{-\ 0,00\ mm}$

L_f = 0,5 mm ± 0,1 mm

L_g = 3,0 mm ± 0,1 mm

The top area of posts P_1 and P_2 has a chamfer.

Posts P_3 and P_4

D_c = 5,00 mm ± 0,01 mm

After assembly, both the upper annular surfaces with outer diameter D_a of the two posts P_1 and P_2 and the upper surfaces of the two posts P_3 and P_4 shall lie between two horizontal planes spaced 0,01 mm apart.

Positions of four posts P_1, P_2, P_3 and P_4

Each centre of posts P_2, P_3 and P_4 shall be located at

L_h = 102,0 mm ± 0,1 mm

L_i = 11,0 mm ± 0,1 mm

L_j = 113,0 mm ± 0,1 mm

L_k = 90,0 mm ± 0,2 mm

from the centre of the post P_1.

The cartridge shall be placed with its reference surfaces onto the posts of the gauge placed horizontally. A vertical downward force F_2 of 1,0 N shall be exerted on the cartridge opposite each of the four posts.

C.2 Requirements

Under the conditions of C.1, three of the four surfaces S1 to S4 shall be in contact with the surface of their respective posts, and any gap between the remaining surface S and the surface of its post shall not exceed 0,1 mm.

Copyright International Organization for Standardization
Provided by IHS under license with ISO
No reproduction or networking permitted without license from IHS Not for Resale

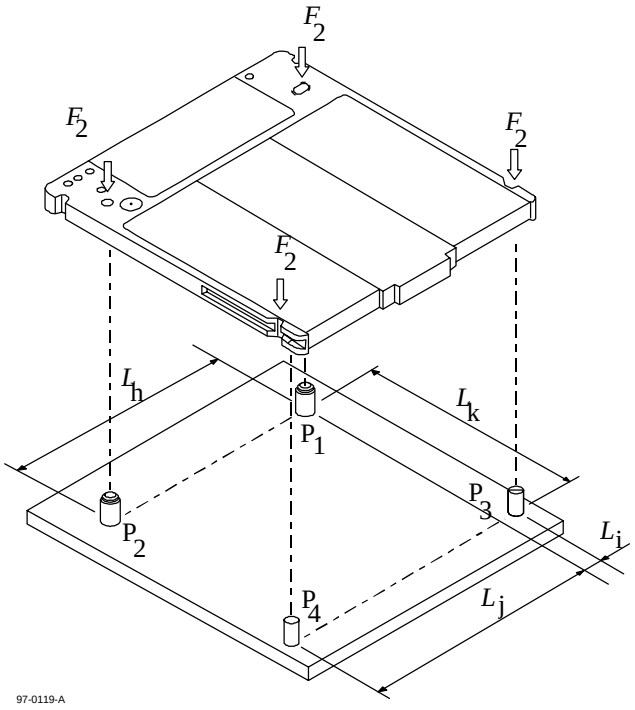

Figure C.1 - Compliance gauge

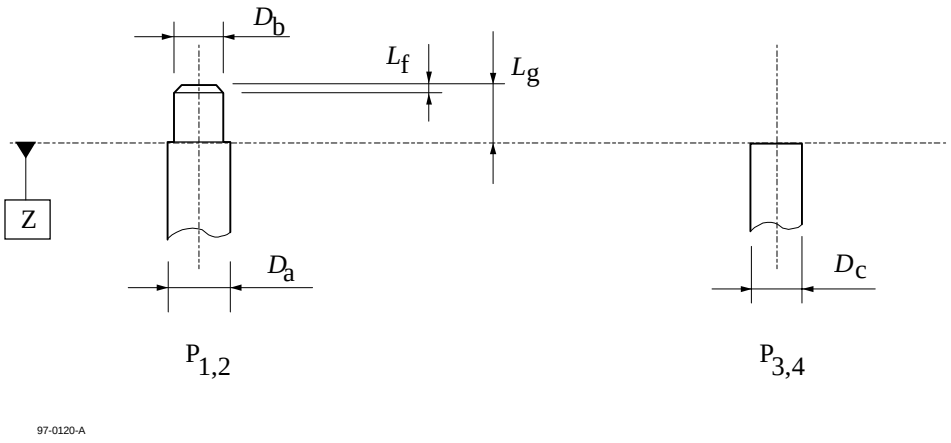

Figure C.2 - Detail of posts

--`,,```,,,,````-`-`,,`,,`,`,,`---
Copyright International Organization for Standardization
Provided by IHS under license with ISO
No reproduction or networking permitted without license from IHS
Not for Resale

Annex D

(informative)

Examples of an opening cover for Type 2 or Type 3 cases

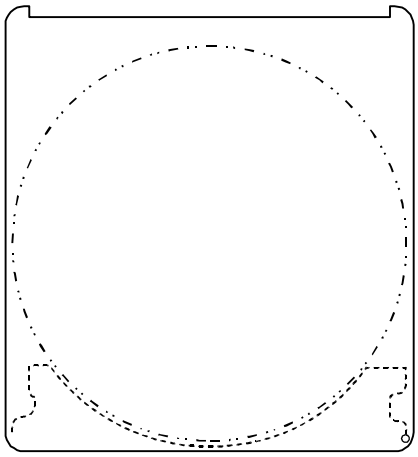

Cover closed

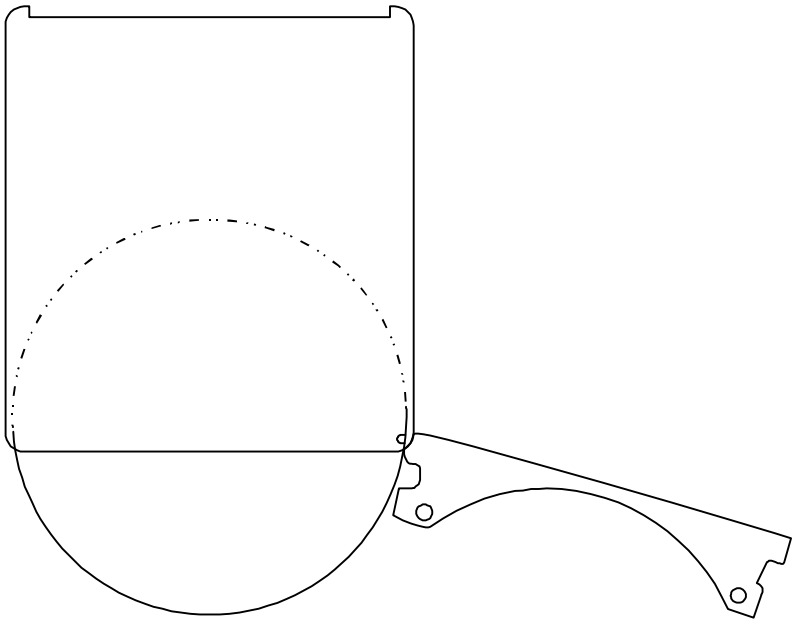

Cover open

97-0121-A

Figure D.1 - First example of an opening cover

Copyright International Organization for Standardization
Provided by IHS under license with ISO
No reproduction or networking permitted without license from IHS Not for Resale

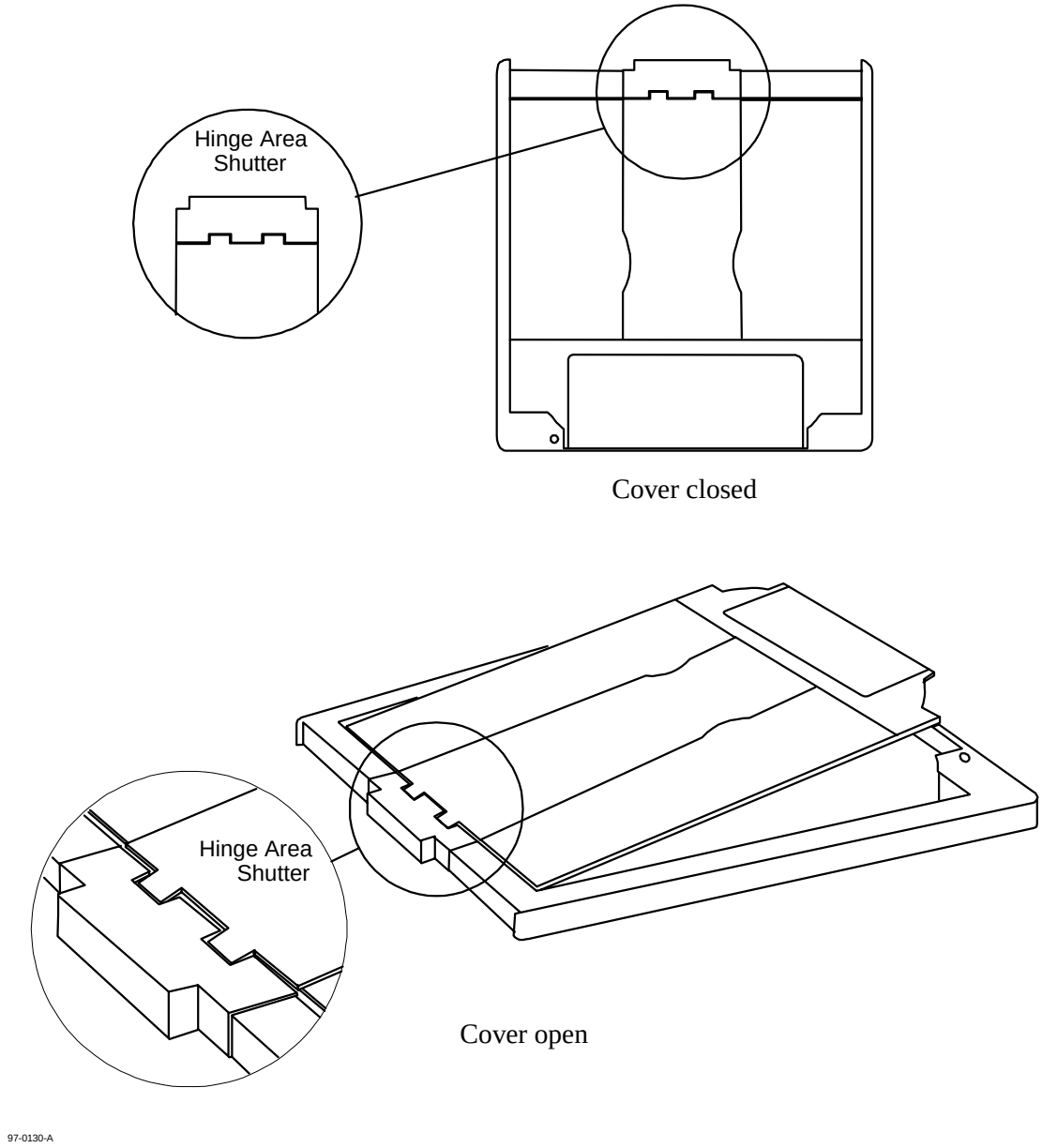

Figure D.2 - Second example of an opening cover

Copyright International Organization for Standardization
Provided by IHS under license with ISO
No reproduction or networking permitted without license from IHS
Not for Resale

Annex E

(informative)

Transportation

E.1 General

As transportation occurs under a wide range of temperature and humidity variations, for differing periods, by many methods of transport and in all parts of the world it is not possible to specify conditions for transportation or for packaging.

E.2 Packaging

The form of packaging should be agreed between sender and recipient or, in the absence of such agreement, is the responsibility of the sender. It should take account of the following hazards.

E.2.1 Temperature and Humidity

Insulation and wrapping should be designed to maintain the conditions for storage over the estimated period of transportation.

E.2.2 Impact loads and vibration

a) Avoid mechanical loads that would distort the shape of the case or cartridge.

b) Avoid dropping the case or cartridge.

c) Cases or cartridges should be packed in a rigid box containing adequate shock-absorbent material.

d) The final box should have a clean interior and a construction that provides sealing to prevent the ingress of dirt and moisture.

Copyright International Organization for Standardization
Provided by IHS under license with ISO
No reproduction or networking permitted without license from IHS Not for Resale

© ISO/IEC

ICS 35.220.30

Price based on 52 pages

Copyright International Organization for Standardization
Provided by IHS under license with ISO
No reproduction or networking permitted without license from IHS

Not for Resale