INTERNATIONAL STANDARD

ISO/IEC 16500-9

First edition
1999-12-15

Information technology — Generic digital audio-visual systems —

Part 9: Usage information protocols

Technologies de l'information — Systèmes audiovisuels numériques génériques —

Partie 9: Protocoles d'informations d'usage

Reference number
ISO/IEC 16500-9:1999(E)

© ISO/IEC 1999

Copyright International Organization for Standardization
Provided by IHS under license with ISO
No reproduction or networking permitted without license from IHS

Not for Resale

PDF disclaimer

This PDF file may contain embedded typefaces. In accordance with Adobe's licensing policy, this file may be printed or viewed but shall not be edited unless the typefaces which are embedded are licensed to and installed on the computer performing the editing. In downloading this file, parties accept therein the responsibility of not infringing Adobe's licensing policy. The ISO Central Secretariat accepts no liability in this area.

Adobe is a trademark of Adobe Systems Incorporated.

Details of the software products used to create this PDF file can be found in the General Info relative to the file; the PDF-creation parameters were optimized for printing. Every care has been taken to ensure that the file is suitable for use by ISO member bodies. In the unlikely event that a problem relating to it is found, please inform the Central Secretariat at the address given below.

© ISO/IEC 1999

All rights reserved. Unless otherwise specified, no part of this publication may be reproduced or utilized in any form or by any means, electronic or mechanical, including photocopying and microfilm, without permission in writing from either ISO at the address below or ISO's member body in the country of the requester.

ISO copyright office
Case postale 56 • CH-1211 Geneva 20
Tel. + 41 22 749 01 11
Fax + 41 22 734 10 79
E-mail copyright@iso.ch
Web www.iso.ch

Printed in Switzerland

Copyright International Organization for Standardization
Provided by IHS under license with ISO
No reproduction or networking permitted without license from IHS

© ISO/IEC 1999 – All rights reserved

Not for Resale

Contents

Page

Foreword ..... **v**
Introduction ..... **vi**
1. Scope **1**
2. Normative references **1**
3. Definitions **2**
4. Acronyms and abbreviations **3**
5. Conventions **4**
6. Introduction to Usage Information Protocols **4**
6.1 Purpose 4
6.2 Telecommunications Management Network (TMN) 4
7. Architecture of Usage Data Management **5**
7.1 Usage Data Management Overview 5
7.2 Usage Data Management Flows 8
7.3 Usage Data Collection Element 10
7.4 DAVIC System Manager 11
8. Usage Data Management Functions **11**
8.1 Usage Data Generation 11
8.2 Usage Data Accumulation 11
8.3 Usage Data Validation 12
8.4 Usage Data Assembly 12
8.5 Usage Data Formatting 12
8.6 Usage Data Correlation Support 12
8.7 Usage Data Collection Administration 13
9. Usage Data Collection Interface **13**
9.1 Protocol stack 13
9.1.1 SNMPv1 13
9.1.2 CMIP 15
9.2 Usage Data Structures 23
9.2.1 SNMP MIB 23
9.2.2 CMIP Managed object classes 57
9.2.3 Packages 62
9.2.4 Attributes 65
9.2.5 Actions 74
9.2.6 Notifications 74
9.2.7 Name Bindings 76

© ISO/IEC 1999 - All rights reserved

--`,,```,,,,````-`-`,,`,,`,`,,`---
Copyright International Organization for Standardization
Provided by IHS under license with ISO
No reproduction or networking permitted without license from IHS
Not for Resale

9.2.8 ASN.1 Defined Types Module 76

10. Usage Data Transfer Interface 85

10.1 Interactive Usage Data Transfer Interface 86

10.2 Bulk Usage Data Transfer Interface 86

10.2.1 Bulk Usage Data Recording 86

10.2.2 File structure 87

10.2.3 Protocol stack 91

10.2.4 FTP Options 91

10.2.5 File-naming Conventions 92

10.2.6 File Transfer Procedures 93

10.2.7 File Storage 94

10.2.8 Removable Medium 94

Bibliography 95

 © ISO/IEC 1999 - All rights reserved

Copyright International Organization for Standardization
Provided by IHS under license with ISO
No reproduction or networking permitted without license from IHS
Not for Resale

Foreword

ISO (the International Organization for Standardization) and IEC (the International Electrotechnical Commission) form the specialized system for worldwide standardization. National bodies that are members of ISO or IEC participate in the development of International Standards through technical committees established by the respective organization to deal with particular fields of technical activity. ISO and IEC technical committees collaborate in fields of mutual interest. Other international organizations, governmental and non-governmental, in liaison with ISO and IEC, also take part in the work.

International Standards are drafted in accordance with the rules given in the ISO/IEC Directives, Part 3.

In the field of information technology, ISO and IEC have established a joint technical committee, ISO/IEC JTC 1. Draft International Standards adopted by the joint technical committee are circulated to national bodies for voting. Publication as an International Standard requires approval by at least 75 % of the national bodies casting a vote.

Attention is drawn to the possibility that some of the elements of this part of ISO/IEC 16500 may be the subject of patent rights. ISO and IEC shall not be held responsible for identifying any or all such patent rights.

International Standard ISO/IEC 16500-9 was prepared by DAVIC (Digital Audio-Visual Council) and was adopted, under the PAS procedure, by Joint Technical Committee ISO/IEC JTC 1, *Information technology*, in parallel with its approval by national bodies of ISO and IEC.

ISO/IEC 16500 consists of the following parts, under the general title *Information technology — Generic digital audio-visual systems*:

— *Part 1: System reference models and scenarios*

— *Part 2: System dynamics, scenarios and protocol requirements*

— *Part 3: Contours: Technology domain*

— *Part 4: Lower-layer protocols and physical interfaces*

— *Part 5: High and mid-layer protocols*

— *Part 6: Information representation*

— *Part 7: Basic security tools*

— *Part 8: Management architecture and protocols*

— *Part 9: Usage information protocols*

© ISO/IEC 1999 - All rights reserved

Copyright International Organization for Standardization
Provided by IHS under license with ISO
No reproduction or networking permitted without license from IHS
Not for Resale

Introduction

ISO/IEC 16500 defines the minimum tools and dynamic behavior required by digital audio-visual systems for end-to-end interoperability across countries, applications and services. To achieve this interoperability, it defines the technologies and information flows to be used within and between the major components of generic digital audio-visual systems. Interoperability between these components and between individual sub-systems is assured through specification of tools and specification of dynamic systems behavior at defined reference points. A reference point can comprise one or more logical (non-physical) information-transfer interfaces, and one or more physical signal-transfer interfaces. A logical interface is defined by a set of information flows and associated protocol stacks. A physical interface is an external interface and is fully defined by its physical and electrical characteristics. Accessible reference points are used to determine and demonstrate compliance of a digital audio-visual subsystem with this international standard.

A summary of each part follows.

ISO/IEC 16500-1 (DAVIC 1.3.1a Part 2) defines the normative digital audio-visual systems technical framework. It provides a vocabulary and a Systems Reference Model, which identifies specific functional blocks and information flows, interfaces and reference points.

ISO/IEC 16500-2 (DAVIC 1.3.1a Part 12) defines system dynamic behavior and physical scenarios. It details the locations of the control functional entities along with the normative protocols needed to support the systems behavior. It is structured as a set of protocol walk-throughs, or "*Application Notes*", that rehearse both the steady state and dynamic operation of the system at relevant reference points using specified protocols. Detailed dynamics are given for the following scenarios: video on demand, switched video broadcast, interactive broadcast, and internet access.

ISO/IEC 16500-3 (DAVIC 1.3.1a Part 14) provides the normative definition of DAVIC Technology Contours. These are strict sets of Applications, Functionalities and Technologies which allow compliance and conformance criteria to be easily specified and assessed. This part of ISO/IEC 16500 contains the full details of two contours. These are the Enhanced Digital Broadcast (EDB) and Interactive Digital Broadcast (IDB). ISO/IEC 16500-3 specifies required technologies and is a mandatory compliance document for contour implementations.

ISO/IEC 16500-4 (DAVIC 1.3.1a Part 8) defines the toolbox of technologies used for lower layer protocols and physical interfaces. The tools specified are those required to digitize signals and information in the Core Network and in the Access Network. Each tool is applicable at one or more of the reference points specified within the Delivery System. In addition a detailed specification is provided of the physical interfaces between the Network Interface Unit and the Set Top Unit and of the physical interfaces used to connect Set Top Boxes to various peripheral devices (digital video recorder, PC, printer). The physical Delivery System mechanisms included are copper pairs, coaxial cable, fiber, HFC, MMDS, LMDS, satellite and terrestrial broadcasting.

ISO/IEC 16500-5 (DAVIC 1.3.1a Part 7) defines the technologies used for high and mid-layer protocols for ISO/IEC 16500 digital audio-visual systems. In particular, this part defines the specific protocol stacks and requirements on protocols at specific interfaces for the content, control and management information flows.

ISO/IEC 16500-6 (DAVIC 1.3.1a Part 9) defines what the user will eventually see and hear and with what quality. It specifies the way in which monomedia and multimedia information types are coded and exchanged. This includes the definition of a virtual machine and a set of APIs to support interoperable exchange of program code. Interoperability of applications is achieved, without specifying the internal design of a set top unit, by a normative Reference Decoder Model which defines specific memory and behavior constraints for content decoding. Separate profiles are defined for different sets of multimedia components.

ISO/IEC 16500-7 (DAVIC 1.3.1a Part 10) defines the interfaces and the security tools required for an ISO/IEC 16500 system implementing security profiles. These tools include security protocols which operate across one or both of the defined conditional access interfaces CA0 and CA1. The interface CA0 is to all security and conditional access functions, including the high speed descrambling functions. The interface CA1 is to a tamper resistant device used for low speed cryptographic processing. This cryptographic processing function is implemented in a smart card.

ISO/IEC 16500-8 (DAVIC 1.3.1a Part 6) specifies the information model used for managing ISO/IEC 16500 systems. In particular, this part defines the managed object classes and their associated characteristics for managing the access network and service-related data in the Delivery System. Where these definitions are taken from existing standards, full reference to the required standards is provided. Otherwise a full

 © ISO/IEC 1999 - All rights reserved

Copyright International Organization for Standardization
Provided by IHS under license with ISO
No reproduction or networking permitted without license from IHS
Not for Resale

description is integrated in the text of this part. Usage-related information model is defined in ISO/IEC 16500-9.

ISO/IEC 16500-9 (DAVIC 1.3.1a Part 11) specifies the interface requirements and defines the formats for the collection of usage data used for billing, and other business-related operations such as customer profile maintenance. It also specifies the protocols for the transfer of Usage Information into and out of the ISO/IEC 16500 digital audio-visual system. In summary, flows of audio, video and audio-visual works are monitored at defined usage data collection elements (e.g. servers, elements of the Delivery System, set-top boxes). Information concerning these flows is then collected, processed and passed to external systems such as billing or a rights administration society via a standardised usage data transfer interface.

Additional Information

ISO/IEC TR 16501 is an accompanying Technical Report. Further architectural and conformance information is provided in other non-normative parts of DAVIC 1.3.1a (1999). A summary of these documents is included here for information.

ISO/IEC TR 16501 (DAVIC 1.3.1a Part 1) provides a detailed listing of the functionalities required by users and providers of digital audio-visual applications and systems. It introduces the concept of a contour and defines the IDB (Interactive Digital Broadcast) and EDB (Enhanced Digital Broadcast) functionality requirements which are used to define the normative contour technology toolsets provided in ISO/IEC 16500-3.

DAVIC 1.3.1a Parts 3, 4 and 5 are DAVIC technical reports. They provide additional architectural and other information for the server, the delivery-system, and the Service Consumer systems respectively. Part 3 defines how to load an application, once created, onto a server and gives information and guidance on the protocols transmitted from the set-top user to the server, and those used to control the set-up and execution of a selected application. Part 4 provides an overview of Delivery Systems and describes instances of specific DAVIC networked service architectures. These include physical and wireless networks. Non-networked delivery (e.g. local storage physical media like discs, tapes and CD-ROMs) are not specified. Part 5 provides a Service Consumer systems architecture and a description of the DAVIC Set Top reference points defined elsewhere in the normative parts of the specification.

DAVIC 1.3.1a Part 13 is a DAVIC technical report, which provides guidelines on how to validate the systems, technology tools and protocols through conformance and / or interoperability testing.

© ISO/IEC 1999 - All rights reserved

Copyright International Organization for Standardization
Provided by IHS under license with ISO
No reproduction or networking permitted without license from IHS
Not for Resale

Information technology — Generic digital audio-visual systems — Part 9: Usage information protocols

1. Scope

This part of ISO/IEC 16500 provides the interface requirements for Usage Information provided by the DAVIC System to support External Support Systems (ESS) such as billing systems, pricing systems and market research systems. DAVIC Elements that need to communicate with External Support Systems shall conform to this specification. It is not required that all DAVIC Elements communicate with External Support Systems.

2. Normative references

The following normative documents contain provisions which, through reference in this text, constitute provisions of this part of ISO/IEC 16500. For dated references, subsequent amendments to, or revisions of, any of these publications do not apply. However, parties to agreements based on this part of ISO/IEC 16500 are encouraged to investigate the possibility of applying the most recent editions of the standards indicated below. For undated references, the latest edition of the normative document referred to applies. Members of ISO and IEC maintain registers of currently valid International Standards. The Telecommunication Standardization Bureau (TSB) maintains a list of currently valid ITU-T Recommendations.

2.1 ISO/IEC and ITU-T normative references

ITU-T Recommendation M.3100, *Generic Network Information Model*, 1995

ITU-T Recommendation Q.2931, *Broadband integrated services digital Network – Digital subscriber signalling system no.2 (DSS2) – User-network interface (UNI) – Layer 3 specification for basic call/connection control*, 1995

CCITT Recommendation X.680 (1994) | ISO/IEC 8824-1:1995, *Information technology – Abstract Syntax Notation One (ASN.1): Specification of basic notation.*

CCITT Recommendation X.690 (1994) | ISO/IEC 8825-1:1995, *Information technology – ASN.1 encoding rules: Specification of Basic Encoding Rules (BER), Canonical Encoding Rules (CER) and Distinguished Encoding Rules (DER).*

CCITT Recommendation X.721 (1992) | ISO/IEC 10165-2:1992, *Information technology – Open Systems Interconnection – Structure of management information: Definition of management information.*

CCITT Recommendation X.730 (1992) | ISO/IEC 10164-1:1993, *Information technology – Open Systems Interconnection – Systems management: Object management function.*

CCITT Recommendation X.731 (1992) | ISO/IEC 10164-2:1993, *Information technology – Open Systems Interconnection – Systems management: State management function.*

CCITT Recommendation X.733 (1992) | ISO/IEC 10164-4:1993, *Information technology – Open Systems Interconnection – Systems management: Alarm reporting function.*

CCITT Recommendation X.734 (1992) | ISO/IEC 10164-5:1993, *Information technology – Open Systems Interconnection – Systems management: Event report management function.*

CCITT Recommendation X.735 (1992) | ISO/IEC 10164-6:1993, *Information technology – Open Systems Interconnection – Systems management: Log control function.*

CCITT Recommendation X.742 (1992) | ISO/IEC 10164-10:1995, *Information technology – Open Systems Interconnection – Systems management: Usage metering function for accounting purposes.*

CCITT Recommendation X.746 (1995) | ISO/IEC 10164-15:1995, *Information technology – Open Systems Interconnection – Systems management: Scheduling function.*

© ISO/IEC 1999 - All rights reserved

Copyright International Organization for Standardization
Provided by IHS under license with ISO
No reproduction or networking permitted without license from IHS
Not for Resale

2.2 Other normative references

RFC 791, *Internet Protocol (IP).*

RFC 793, *Transmission Control Protocol (TCP).*

RFC 959, *File Transfer Protocol (FTP).*

RFC 1155, *Structure and Identification of Management Information for TCP/IP-based Internets.*

RFC 1157, *A Simple Network Management Protocol (SNMP).*

3. Definitions

This clause defines new terms, and the intended meaning of certain common terms, used in this part of ISO/IEC 16500. Annex A of ISO/IEC 16500-1 defines additional terms and, in some cases, alternative interpretations that are appropriate in other contexts. For convenience, the normative definitions below are included in the annex.

3.1. Bulk Usage Data Transfer Interface: The portion of the interface between a DAVIC System Manager and an External Support System by which the External Support System receives a bulk download of a collection of Usage Data in the form of a Usage Data File.

3.2. DAVIC Element : A component of a DAVIC System. A possible source generator of Usage Data.

3.3. DAVIC System Manager: A component that supports the overall management of the DAVIC System, of which Usage Data management (or Accounting Management) is a part.

3.4. External Support System : A component external to the DAVIC System which receives Usage Data through the Usage Data Transfer Interface (Interactive or Bulk).

3.5. Interactive: The portion of the Usage Data Transfer Interface used for transactional transfer of Usage Data Records.

3.6. Support Data: Data, such as prices and account (e.g., credit card) numbers, needed dynamically by DAVIC Elements or External Support Systems. This data is required or provided by an Service Consumer during the billing-related part of a service session (e.g., when the price of a service is being provided, or when the Service Consumer chooses a method of payment).

3.7. Usage Data: Data relating to usage of services and resources, typically needed for financial transactions involving Service Consumers, Network Providers, Service Providers and Content Providers. This data is collected from DAVIC Elements by DAVIC System Managers using the Usage Data Collection Interface, and is delivered to External Support Systems by DAVIC System Managers using the Usage Data Transfer Interface.

3.8. Usage Data Accumulation: The process of summarizing raw Usage Data.

3.9. Usage Data Assembly: The process of gathering together all of the Usage Data generated by a specific DAVIC Element for a specific use of a service

3.10. Usage Data Collection Element: The portion of each DAVIC Element which generates Usage Data and transmits the data to the DAVIC System Manager over the Usage Data Collection Interface. This element could also perform Usage Data Accumulation, Usage Data Validation, Usage Data Assembly and Usage Data Formatting.

3.11. Usage Data Collection Interface: The interface between a DAVIC Element and a DAVIC System Manager. This interface supports the delivery of Usage Data to the DAVIC System Manager.

3.12. Usage Data Collection Administration: The process of determining the disposition of logged Usage Data, providing External Support Systems access to the Usage Data, and scheduling the reporting of Usage Data based on pre-determined rules about the data needed for the External Support Systems.

3.13. Usage Data Correlation Support: The process of supporting the correlation (i.e., association) of Usage Data generated by different DAVIC Elements for the same service usage instance. This support includes producing correlation keys, administering correlation keys, exchanging correlation keys, inserting correlation keys into Usage Data Records and correlating Usage Data based on correlation keys.

 © ISO/IEC 1999 - All rights reserved

Copyright International Organization for Standardization
Provided by IHS under license with ISO
No reproduction or networking permitted without license from IHS Not for Resale

3.14. Usage Data File: A collection of Usage Data Records sent by a DAVIC System Manager to an External Support System over the Usage Data Transfer Interface.

3.15. Usage Data Formatting: The process of creating a structured representation of unformatted Usage Data using a pre-defined format.

3.16. Usage Data Functions: The functions that the Usage Data Collection Element and the DAVIC System Manager perform on Usage Data. These functions are Usage Data Generation, Usage Data Accumulation, Usage Data Assembly, Usage Data Validation, Usage Data Formatting, Usage Data Correlation Support and Usage Data Collection Administration.

3.17. Usage Data Generation: The process of determining what Usage Data must be measured and recorded, and producing this data.

3.18. Usage Data Record: A set of associated Usage Data. These records are sent in transactional messages over the Usage Data Collection Interface, and in transactional messages and files over the Usage Data Transfer Interface.

3.19. Usage Data Transfer Interface: The interface between a DAVIC System Manager and an External Support System. This interface has two subparts for different modes of data transfer. The bulk transfer part is used to transfer a collection of Usage Data Records in the form of a file. The interactive transfer part is used for transactional transfer of Usage Data Records.

3.20. Usage Data Validation: The process of editing Usage Data to ensure that it meets specific integrity checks and conforms to semantic and syntactic rules.

4. Acronyms and abbreviations

This clause defines the acronyms and abbreviations used in this part of ISO/IEC 16500. Annex B of ISO/IEC 16500-1 defines acronyms and abbreviations used within ISO/IEC 16500.

API	Application Program Interface
ASCII	American Standard Code for Information Interchange
ASN.1	Abstract Syntax Notation One
ATM	Asynchronous Transfer Mode
BAF	Bellcore Automatic Message Accounting Format
B-UDTI	Bulk Usage Data Transfer Interface
CMIP	Common Management Information Protocol
DE	DAVIC Element
DSM	DAVIC System Manager
DSM-CC U-U	Digital Storage Media - Control Commands User-User
DSM-CC U-N	Digital Storage Media - Control Commands User-Network
DSUR	Delivery System Usage Records
EBCDIC	Extended Binary Coded Decimal Interchange Code
EFD	Event Forwarding Discriminator
ESS	External Support System
FTP	File Transfer Protocol
GIOP	Generic Inter-ORB Protocol
IDL	Interface Definition Language
IIOP	Internet Inter-ORB Protocol
IP	Internet Protocol
ITU	International Telecommunications Union
I-UDTI	Interactive usage data transfer interface
MF	Management Function
NE	Network Element
NEF	Network Element Functionality
OMG	Object Management Group
OS	Operations System
OSF	Operations System Functionality
RFC	Request for Comments
RPC	Remote Procedure Call
SMF	System Management Function

Copyright International Organization for Standardization
Provided by IHS under license with ISO
No reproduction or networking permitted without license from IHS Not for Resale

SNMP	Simple Network Management Protocol
STU	Set Top Unit
SUR	Service Usage Records
TCP	Transmission Control Protocol
TFTP	Trivial File Transfer Protocol
TMN	Telecommunications Management Network
UDCE	Usage Data Collection Element
UDCI	Usage Data Collection Interface
UDTI	Usage Data Transfer Interface
UMD	Usage Metering Data
UMR	Usage metering Record
VOD	Video on Demand

5. Conventions

The style of this part of ISO/IEC 16500 follows the *Guide for ITU-T and ISO/IEC JTC 1 cooperation. Appendix II: Rules for presentation of ITU-T | ISO/IEC common text (March 1993)*.

6. Introduction to Usage Information Protocols

6.1 Purpose

This specification establishes the protocols for the transfer of Usage Information into and out of the DAVIC System with entities that are outside of the DAVIC System. There are two types of data exchange that can be considered under the general heading of Usage Information:

- *Usage Data*—data relating to events and usage of resources, typically needed for financial transactions involving Service Consumers, Network Providers, Service Providers, and Content Providers. This data is not interactive, but collected from the system by an DAVIC System Manager and made available at the Usage Data Transfer Interface.
- *Support Data*—data, such as prices and account numbers, exchanged dynamically with External Support Systems (ESSs). This data is requested as needed and delivered promptly through the Support Data Interface.

The DAVIC System shall provide for the collection and output of Usage Data from all of the appropriate DAVIC System elements in support of the needs of ESSs (e.g., Billing Systems, Market Research Systems and Network Planning Systems). While the DAVIC System also needs to support the access to such ESSs by DAVIC Elements to obtain Support Data (e.g., pricing information and subscriber billing status), as well as the provision of Support Data (e.g., account number for chosen payment method) to ESSs, this part of ISO/IEC 16500 covers only the Usage Data Interface. It does not define the Support Data Interface nor does it define the External Support Systems themselves, which are outside of the DAVIC System.

6.2 Telecommunications Management Network (TMN)

A Telecommunications Management Network (TMN) is defined in ITU Recommendation M.3010 as follows:

> A TMN provides management functions for telecommunications networks and services and offers communications between itself and the telecommunications networks, services and other TMNs. In this context a telecommunications network is assumed to consist of both digital and analogue telecommunications equipment and associated support equipment. A telecommunications service in this context consists of a range of capabilities provided to customers.

The Usage Data protocols defined in this part of ISO/IEC 16500 are intended to follow as closely as possible the definition of TMN protocols as given in the ITU TMN documents. ITU Recommendation M.3400 specifies the TMN management functional areas to include:

 © ISO/IEC 1999 - All rights reserved

--`,,```,,,,````-`-`,,`,,`,`,,`---

Copyright International Organization for Standardization
Provided by IHS under license with ISO
No reproduction or networking permitted without license from IHS Not for Resale

- Performance management
- Fault management
- Configuration management
- Accounting management
- Security management

Usage Data measurement is classified as a function of accounting management in the TMN model.

This part of ISO/IEC 16500 is confined to Usage Data. The architecture of the protocols defined is consistent with the TMN model so that when future releases deal with other management areas they will be architecturally compatible.

7. Architecture of Usage Data Management

ESSs have data requirements that are unique, as well as data requirements that are common. This specification standardizes the handling of such data via open interfaces to enable ESS implementors to undertake their designs without having detailed knowledge of the specific implementation of the DAVIC System. DAVIC application designers will also have the ability to access ESSs via standardized interfaces that will give the owners of legacy systems the opportunity to preserve their investment simply by developing new interfaces.

7.1 Usage Data Management Overview

According to the TMN model (subclause 6.2) system management is composed of five functional areas: Fault, Configuration, Performance, Security and Accounting. The Usage Data solution presented herein is considered to define part of Accounting Management for the DAVIC System. It is anticipated that solutions for the other four management domains will be provided in a future version of this document.

In order to be consistent with the anticipated full support of system management, the Usage Data architecture includes a general system management component, called a DAVIC System Manager (DSM), which supports Accounting Management (and will support the other four management domains). Figure 11-1 illustrates the location of the DSM within the Usage Data architecture. As shown, the DSM is composed of the following components:

- Data Manager

  The Data Manager is the repository for data received from DAVIC Elements. Each participating DAVIC Element is required to send Usage and Event Data to the Data Manager. The DAVIC System Managers use the data in the Data Manager to perform their functions. For example the Accounting component formats data for the external Billing Systems.

- System Management Elements
  - Accounting
  - Fault
  - Configuration
  - Performance
  - Security

© ISO/IEC 1999 - All rights reserved

Copyright International Organization for Standardization
Provided by IHS under license with ISO
No reproduction or networking permitted without license from IHS
Not for Resale

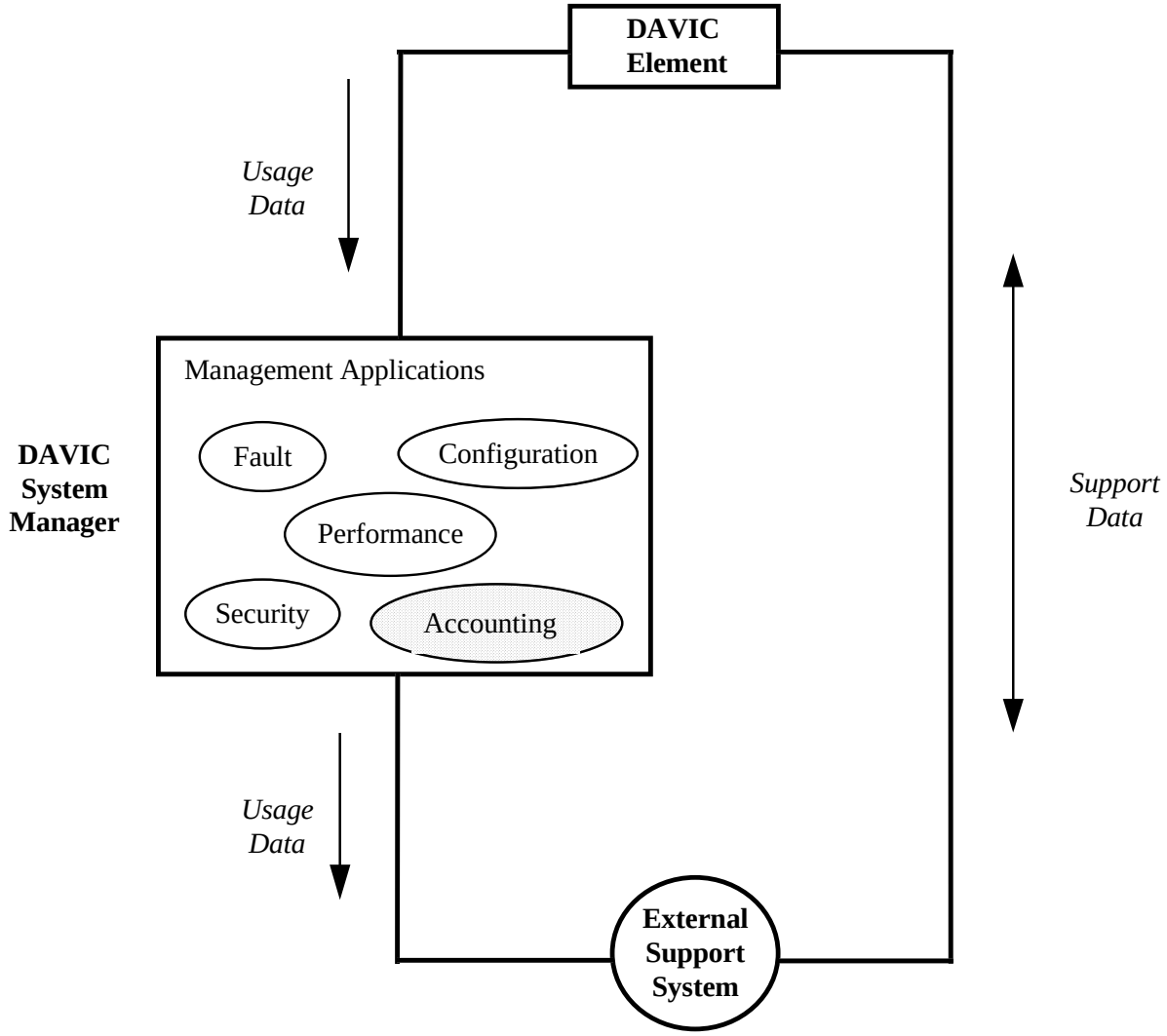

Figure 11-1 — DAVIC System Manager

The solution contained herein serves as a definition of part of the Accounting Management application. It also addresses the functionality of the Data Manager component of the DSM.

Figure 11-2 illustrates the architecture of the Usage Data environment. Each DAVIC Element (e.g., STU, Gateway, Server) contains an Usage Data Collection Element (UDCE) which has the responsibility for collecting and aggregating usage events local to that element. The UDCE communicates Usage Data to the DAVIC System Manager (DSM) after first registering the events for which Usage Data will be sent to the DSM. The Usage Data Collection Interface (UDCI) is the interface between Usage Data Collection Elements and DAVIC System Managers used to transfer Usage Data between these components. External Support Systems, such as Billing Systems, Market Research Systems, Operations, Administration, Maintenance and Planning (OAM&P) Systems, Network Planning Systems, Regulatory Reporting Systems and others systems, access the Usage Data through the Usage Data Transfer Interface (UDTI). The properties of External Support Systems are not specified by DAVIC. The UDTI is the single interface point for all of the ESSs to access Usage Data from outside the DAVIC System boundary. The UDTI supports two modes of communication: interactive transaction-based communication and bulk, file-based communication.

 © ISO/IEC 1999 - All rights reserved

Copyright International Organization for Standardization
Provided by IHS under license with ISO
No reproduction or networking permitted without license from IHS
Not for Resale

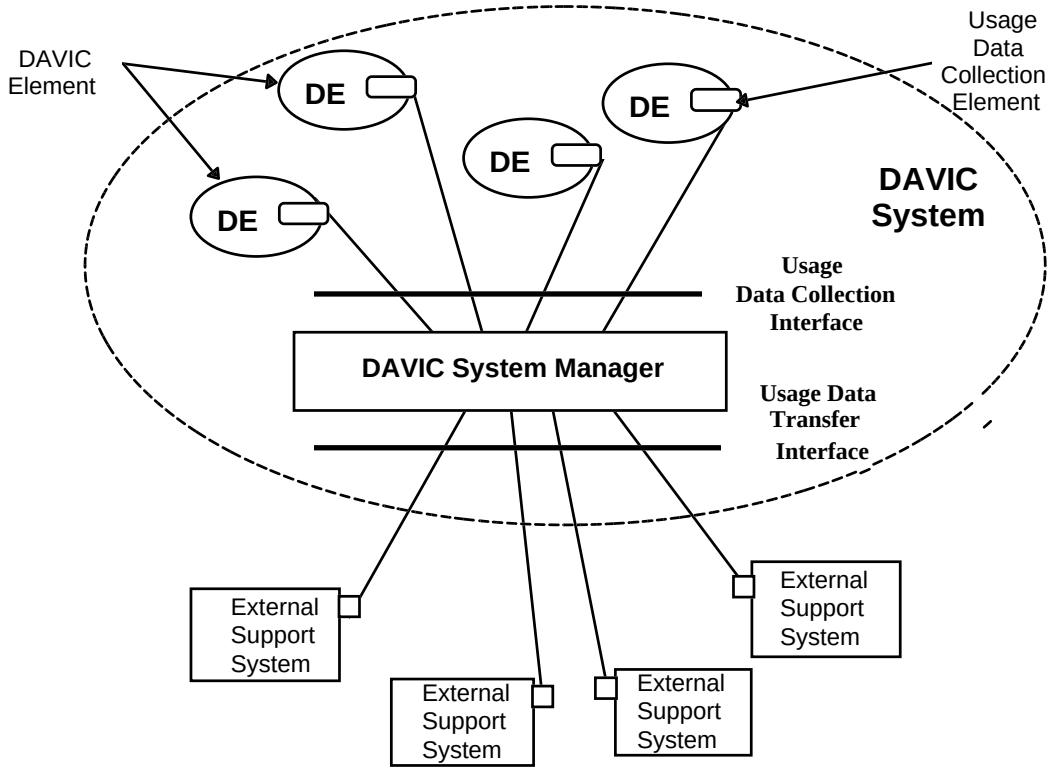

Figure 11-2 — Usage Data Environment

Figure 11-3 shows a typical ordering of the Usage Data Functions and how they may be divided between the DAVIC elements and the DAVIC System Manager.

--`,,```,,,,````-`-`,,`,,`,`,,`---

Copyright International Organization for Standardization
Provided by IHS under license with ISO
No reproduction or networking permitted without license from IHS Not for Resale

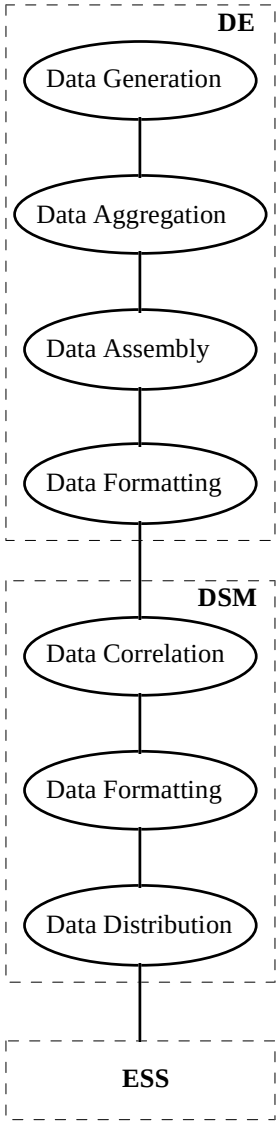

Figure 11-3 — Usage Data Functional Architecture

7.2 Usage Data Management Flows

This section presents example flows of Usage Data between a DAVIC Element and DSM across the Usage Data Collection Interface, as well as between a DSM and an ESS for both the Interactive and Bulk Usage Data Transfer Interfaces.

Figure 11-4 illustrates an example flow of Usage Data for the Usage Data Collection Interface and Interactive Usage Data Transfer Interface. The flow addresses a request/reply method for collecting Usage Data, where the receiver requests Usage Data and the sender provides the data. Alternatively, to expedite the transfer of the Usage Data, the sender could either provide the data directly to the receiver or indicate to the receiver that new data exists. This alternative method could be used for either or both interfaces.

The messages shown in Figure 11-4 are described below.

- *Message 1* - The DSM makes a request to the DAVIC Element for Usage Data A. (This could be a request for all new Usage Data).
- *Message 2* - The DAVIC Element responds to the request by delivering Usage Data A.
- *Messages 3 & 4* - Same as Messages 1 & 2 for Usage Data B.

 © ISO/IEC 1999 - All rights reserved

Copyright International Organization for Standardization
Provided by IHS under license with ISO
No reproduction or networking permitted without license from IHS
Not for Resale

- *Message 5* - The ESS makes a request to the DSM for all new Usage Data, which in this case is Usage Data A and B.
- *Message 6* - The DSM responds to the request by delivering Usage Data A and B.
- *Messages 7 & 8* - Same as Messages 1 & 2 for Usage Data C.
- *Messages 9 & 10* - Same as Messages 5 & 6 for Usage Data C.

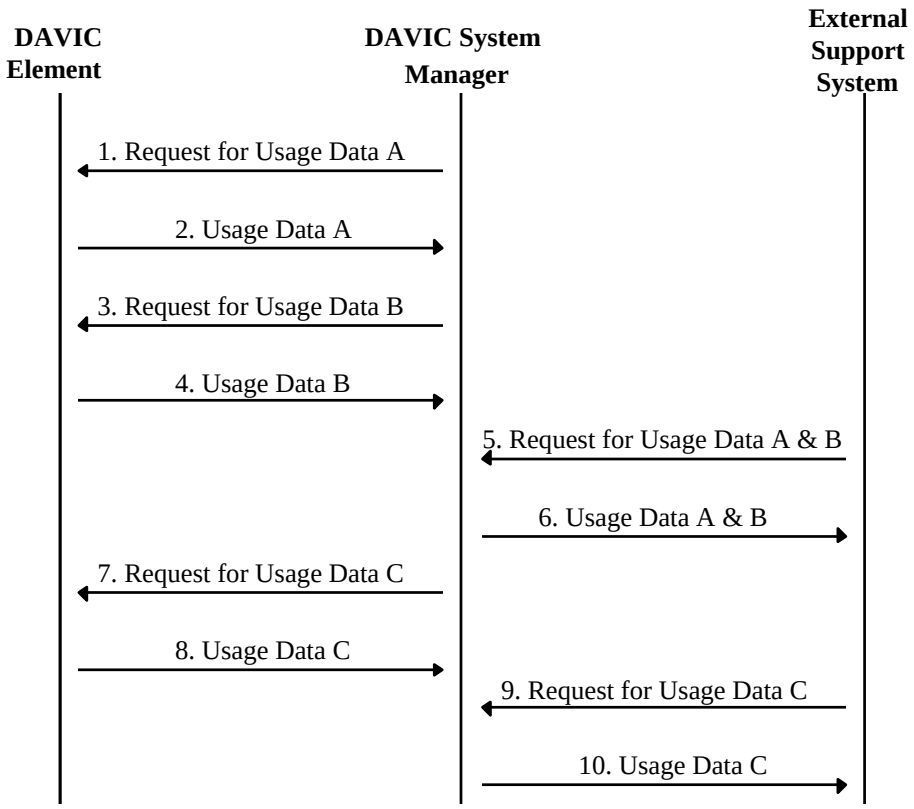

Figure 11-4 — Usage Data Flow - Interactive Mode

Figure 11-5 illustrates an example flow of Usage Data for the Usage Data Collection Interface and Bulk Usage Data. The flow addresses a request/reply method for collecting Usage Data, where the receiver requests Usage Data or a Usage Data File and the sender provides the data or file. Alternatively, for the Usage Data Collection Interface, to expedite the transfer of the Usage Data, the DAVIC Element could either provide the data directly to the DSM or indicate to the DSM that new data exists. For the Bulk Usage Data Transfer Interface, the DSM could initiate the transfer of Usage Data Files to the ESS.

The messages shown in Figure 11-5 are described below.

- *Message 1* - The DSM makes a request to the DAVIC Element for Usage Data A. (This could be a request for all new Usage Data).
- *Message 2* - The DAVIC Element responds to the request by delivering Usage Data A.
- *Messages 3 & 4* - Same as Messages 1 & 2 for Usage Data B.
- *Message 5* - The DSM makes a request to the DAVIC Element for all new Usage Data, which in this case is Usage Data C and D.
- *Message 6* - The DAVIC Element responds to the request by delivering Usage Data C and D.
- *Message 7* - The ESS makes a request to the DSM for Usage Data File X, which would be the file with the next file number in the file number sequence maintained by the components.

Copyright International Organization for Standardization
Provided by IHS under license with ISO
No reproduction or networking permitted without license from IHS Not for Resale

- *Message 8* - The DSM responds to the request by delivering Usage Data File X, which contains Usage Data A, B, C and D.

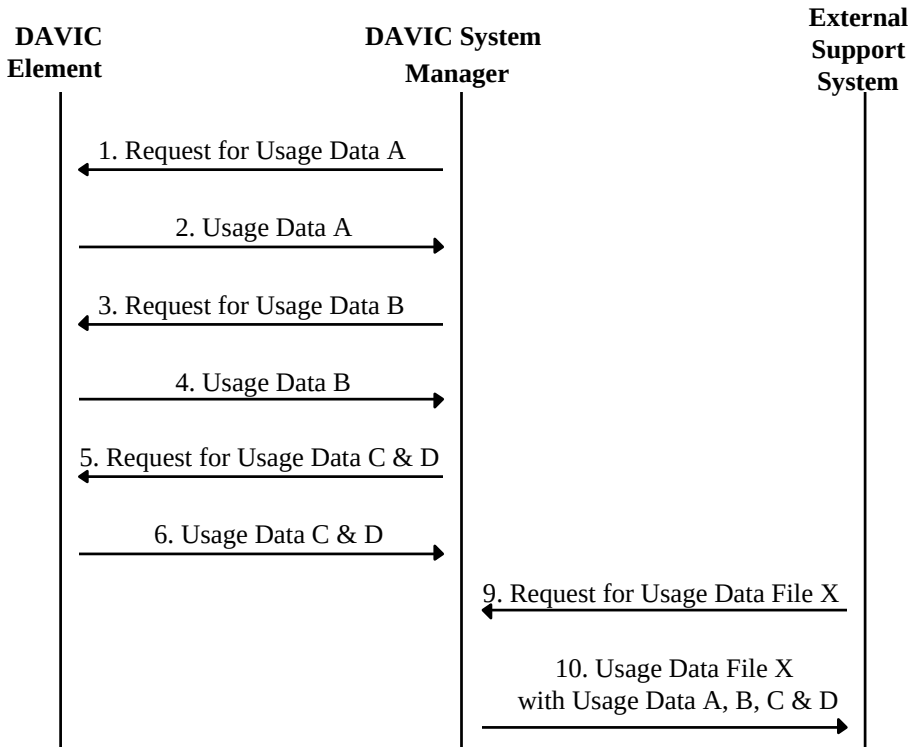

Figure 11-5 — Usage Data Flow - Bulk Mode

7.3 Usage Data Collection Element

Each DAVIC Element that will generate Usage Data shall contain a Usage Data Collection Element (UDCE). This component is a likely site where the Data Generation and Usage Data Aggregation Usage Data Functions (subclause 7.1) are implemented. Functional requirements for the UDCE's support of these Usage Data Functions will be provided in a future version of the DAVIC specification. The UDCE should conform to the following document for the Usage Data Functions that it supports:

- ITU-T Recommendation M.3400, *Maintenance: Telecommunications Management Network - TMN Management Functions*, February 1996.

Since the Usage Data generated by DAVIC Elements is used to support billing, a high level of reliability and quality must be ensured in handing these data to enable accurate and timely revenue collection. Hence, the UDCE should meet the following data integrity requirements:

- At most 1 event record in 100,000 event records is lost.
- At most 1 event record in 100,000 event records is misproduced (i.e., inaccurate, duplicated, or omitted).
- No single failure can result in the loss of more than 10,000 event records.

Data retention lengths are expected to be short for the DAVIC Elements and their associated UDCEs.

Usage Data Messages should be output by the UDCE very soon after the occurrence of the corresponding event to support time-sensitive functions such as Real-time Payment, which requires access to Usage Data immediately after the completion of a service in order to determine the final cost to the Service Consumer. Therefore, the UDCE must quickly assemble all Usage Data associated with a service instance and output this

 © ISO/IEC 1999 - All rights reserved

Copyright International Organization for Standardization
Provided by IHS under license with ISO
No reproduction or networking permitted without license from IHS Not for Resale

data to a DAVIC System Manager over the Usage Data Collection Interface. An UDCE shouldl output Usage Data within 0.5 seconds of the occurrence of a data-resulting event.

7.4 DAVIC System Manager

There shall be a DAVIC System Manager (DSM) component. Included in this component is the System Management Element described in Section 8 of this specification where the Data Formatting, Data Correlation, and Data Distribution Functions (subclause 7.1) are implemented.. The DSM also supports the Usage Data Collection Interface to DAVIC Elements and the Usage Data Transfer Interface to External Support Systems. The UDCE should conform to the following document for the Usage Data Functions that it supports:

- ITU-T Recommendation M.3400, *Maintenance: Telecommunications Management Network - TMN Management Functions*, February 1996.

Since the Usage Data generated by DAVIC Elements is used to support billing, a high level of reliability and quality should be ensured in handing these data to enable accurate and timely revenue collection. Hence, the DAVIC System Manager should meet the following availability and integrity requirements:

- 99.994% availability (30 minutes of down time per year).
- At most 1 record in 100,000 is lost.
- At most 1 record in 100,000 is misproduced (i.e., inaccurate, duplicated, or omitted)
- No single failure can result in the loss of more than 10,000 records.

The data retention lengths for the System Management Element is dependent on the data access needs of the External Support Systems. Billing Systems may desire access to Usage Data soon (e.g., within minutes) of the data's generation, whereas Market Research Systems may want data for the past week.

8. Usage Data Management Functions

To meet the Usage Data access needs of the parties involved in providing the addressed services, DAVIC Elements and DAVIC System Managers shall support the *Usage Data Functions* that are described in this clause. These functions include Usage Data Generation, Usage Data Accumulation, Usage Data Validation, Usage Data Assembly, Usage Data Formatting, Usage Data Correlation Support, and Usage Data Collection Administration.

The Usage Data Functions are described below. The definitions of the functions align with those defined for accounting management in ITU-T Recommendation M.3400, *Maintenance: Telecommunications Management Network - TMN Management Functions*, February 1996.

8.1 Usage Data Generation

This function measures and records Service Consumer's use of services and resources according to a pre-determined set of rules. Usage Data Generation often generates the Usage Data as the state of the service session changes. This function records the data for transfer to the Usage Data Accumulation and Usage Data Validation functions. Usage Data Generation functionality resides in DAVIC Elements. It can also reside in DAVIC System Managers.

8.2 Usage Data Accumulation

For certain types of Usage Data (e.g., "pauses" by the Service Consumer), it is necessary to accumulate the raw Usage Data that is recorded and measured. Usage Data Accumulation is the process of summarizing raw Usage Data. The Usage Data Accumulation functionality can reside in a DAVIC Element, in a DAVIC System Manager, or in both systems.

--`,,```,,,,````-`-`,,`,,`,`,,`---

Copyright International Organization for Standardization
Provided by IHS under license with ISO
No reproduction or networking permitted without license from IHS Not for Resale

8.3 Usage Data Validation

This function edits and validates data to ensure that it meets specific integrity checks and conforms to semantic or syntactic rules. Usage Data Validation can support verification that Usage Data is collected from DAVIC Element(s) in a timely fashion. Upon detection of errors, this function can report or flag them to a downstream usage error correction function normally located in an External Support System. Usage Data Validation functionality can reside in a DAVIC Element, in a DAVIC System Manager, or in both systems.

8.4 Usage Data Assembly

All of the Usage Data generated by a DAVIC Element to account for a single use of a service must be assembled to obtain a complete view of the DAVIC Element's support of this service use. Usage Data Assembly is the process of gathering together all of the Usage Data generated by a specific DAVIC Element for a specific use of a service. Data Assembly associates Usage Data Elements for the same service instance and assembles these elements into an unformatted Usage Data Record. The Data Assembly functionality can reside in a DAVIC Element, in a DAVIC System Manager, or in both systems.

8.5 Usage Data Formatting

Prior to the transfer of the Usage Data in Usage Data Files to External Support Systems, Usage Data Records must be formatted to enable these systems to process the records. Usage Data Formatting is the process of creating a structured representation of the unformatted Usage Data Records using a pre-defined format. This representation shall be sufficiently general to be used by many External Support Systems. The Data Formatting functionality can reside in a DAVIC Element, in a DAVIC System Manager, or in both systems.

8.6 Usage Data Correlation Support

Multiple DAVIC Elements generate Usage Data for a single service usage instance. It is highly desirable that all Usage Data for a single service instance be associated for the following reasons:

1. All cost elements for a service must appear together on a Service Consumer's bill.
2. Associating user session-level events enables bundling of services. This enables the handling of the case where multiple service providers have a business arrangement.
3. Associating user session-level events with network connections enables a network provider to provide more-useful information to a service provider when billing the service provider for the network connections (if this billing arrangement exists)
4. Associating user session-level events with network connections enables analysis of the impacts of user activity on network connections.

For these reasons, correlation of Usage Data Records is a vital function. Usage Data Correlation Support (called "Service Correlation Support" in ITU-T Draft Recommendation M.3400) is the association of Usage Data Records generated by different DAVIC Elements for the same service usage instance. This functionality is resident in DAVIC Elements and DAVIC System Managers, and could also reside in an External Support System. Functionality supporting generation, exchange, insertion into Usage Data Records, and administration of correlation keys is normally resident in DAVIC Elements. Functionality supporting record correlation and management of correlation keys normally is resident in DAVIC System Managers. An External Support System could provide functionality to perform higher-level record correlation than is supported by DSMs.

The following items will be defined in a future version of the DAVIC specification:

- Use of connection/session identifier fields for DAVIC-chosen signaling protocols as correlation keys (for DAVIC Elements)
- Correlation key generation procedures and/or use of standardized key generation procedures (for DAVIC Elements)
- Correlation key handling procedures and/or use of standardized key handling procedures (for DAVIC Elements)

 © ISO/IEC 1999 - All rights reserved

--`,,```,,,,````-`-`,,`,,`,`,,`---

Copyright International Organization for Standardization
Provided by IHS under license with ISO
No reproduction or networking permitted without license from IHS Not for Resale

- Data correlation procedures (for DAVIC System Manager for its domain)

8.7 Usage Data Collection Administration

To meet the needs of the various External Support Systems that require (or at least desire) access to Usage Data, these systems shall be provided with the Usage Data Records generated by the DAVIC Elements. Usage Data Collection Administration determines the disposition of logged Usage Data, provides access to the Usage Data, and schedules the reporting of Usage Data based on pre-determined rules about the data needed for those systems. This function normally resides in the DAVIC System Manager.

9. Usage Data Collection Interface

The main use of the Usage Data Collection Interface (UDCI) is to pass Usage Data generated by a DAVIC Element to a DAVIC System Manager. The DAVIC System Manager then uses the Usage Data Interface (UDTI) to forward this data to various ESSs (e.g., Billing Systems).

The remainder of this section presents the protocol stack for the interface and the Usage Data that would be passed over the interface.

9.1 Protocol stack

A full protocol stack is used to communicate Usage Data over the UDCI. Since control of the collection of Usage Data is considered part of Accounting Management (a system management function), it is appropriate for the protocol stacks defined in ISO/IEC 16500-5 for the S5 information flow to be used for this purpose. The S5 protocol stacks could also be used for the actual collection of the Usage Data. These stacks shall be based on Version 1 of the Simple Network Management Protocol (SNMPv1) for STUs, Servers, and Service Related Control DAVIC Elements, and on the Common Management Information Protocol (CMIP) for Network Systems.

9.1.1 SNMPv1

The framework for using SNMPv1 to support the UDCI consists of SNMPv1, an SNMP Manager, an SNMP Agent and a Management Information Base (MIB). Figure 11-6 illustrates this framework. An *SNMP Manager* is the process running at a DAVIC System Manager that supports the use of SNMPv1 for management of a DAVIC Element. An *SNMP Agent* is the corresponding process running at the DAVIC Element that supports this management by controlling SNMPv1-based access to the managed objects composing the DAVIC Element's MIB and by sending *traps* (i.e., protocol alarms) defined in the MIB. A *MIB* is a virtual repository of management information. The SNMP Manager and SNMP Agent communicate using Protocol Data Units (PDUs) specifically defined for use by each process.

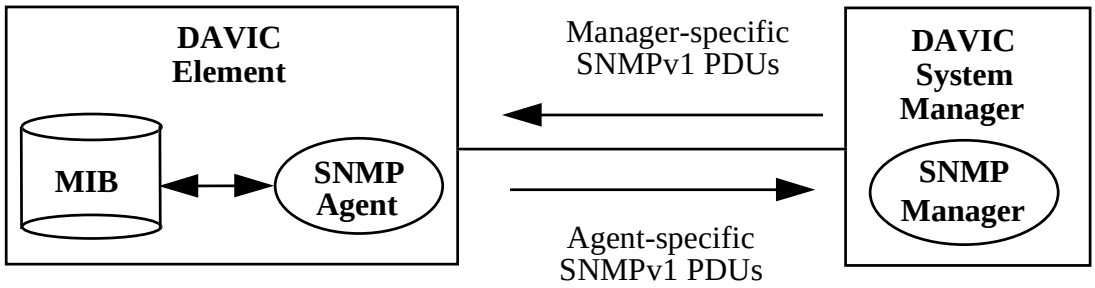

Figure 11-6 — SNMP Framework for UDCI

Collectively, PDUs enable the DAVIC System Manager to request and set managed object information in the MIBs of the DAVIC Elements. In addition, the PDUs enable the DAVIC Element to respond to a received PDU and notify the DAVIC System Manager of the occurrence of a particular event. The PDUs defined for SNMPv1 are as follows:

Copyright International Organization for Standardization
Provided by IHS under license with ISO
No reproduction or networking permitted without license from IHS Not for Resale

- GetRequest-PDU - Sent by an SNMP Manager to an SNMP Agent to request information regarding a specific managed object in a MIB.
- GetNextRequest-PDU - Sent by an SNMP Manager to an SNMP Agent to request the value of the managed object immediately following the managed object identified in the PDU.
- SetRequest-PDU - Sent by an SNMP Manager to an SNMP Agent to set the value of a managed object to a specific value.
- GetResponse-PDU - Sent by an SNMP Agent to an SNMP Manager in response to a GetRequest-PDU, GetNextRequest-PDU, or SetRequest-PDU.
- Trap-PDU - Generated and transmitted by an SNMP Agent when a pre-defined unusual event occurs (analogous to an alarm). A Trap-PDU is usually called simply a *trap*.

The remainder of this section includes the definition of PDU handling, security and PDU logging for the use of SNMPv1 for the UDCI.

9.1.1.1 PDU handling

In generating and handling SNMPv1 PDUs, DAVIC System Managers and DAVIC Elements shall follow the specific formats and procedures presented in Internet RFC 1157, which defines SNMPv1. However, there are a few aspects of the protocol for which further definition is necessary to help ensure interoperability and consistency. These definitions for the use of SNMPv1 by DAVIC are presented below.

An OCTET STRING is an Abstract Syntax Notation One (ASN.1) syntax representing a string of octets. The MIB defined for Usage Data (subclause 9.2) contains managed object with the DisplayString syntax, which is derived from the OCTET STRING syntax. The DisplayString syntax limits octet strings to printable characters encoded using the American Standard Code for Information Interchange (ASCII) coded character set defined in ANSI X3.4-1986. Besides being used for the DisplayString syntax, the OCTET STRING syntax is used for the community name passed in SNMPv1 PDUs to authenticate an SNMP Manager and SNMP Agent (subclause 9.1.1.2). DAVIC Elements and DAVIC System Managers shall use ASCII to encode and decode all SNMPv1-based Data Elements passed over the UDCI that have OCTET STRING as their syntax.

All PDUs have a variable-bindings list used to contain variable names and their values. For GetRequest-PDU and GetNextRequest-PDU, the PDU only contains variable names since the PDU is a request for the value of the named variable. Hence, the value portion of the variable binding list for these PDU types is not used. DAVIC Elements and DAVIC System Managers shall set this value portion to the ASN.1 data type NULL.

There may be situations where a managed object requested by a DAVIC System Manager is not supported by the DAVIC Element to which the request is sent (e.g., if a managed object is optional and the supplier does not implement it). In these situations, the DAVIC Element must indicate that the managed object does not exist in its MIB. In response to a GetRequest-PDU requesting the value of a managed object that is not supported, the DAVIC Element shall return a GetResponse-PDU that has an ErrorStatus value of *noSuchName*.

A DAVIC System Managers tracks outstanding PDUs through the use of request IDs, which are assigned to all PDUs other than Trap-PDUs. When a DAVIC System Manager sends a GetRequest-PDU, GetNextRequest-PDU, or SetRequest-PDU to a DAVIC Element, it first assigns the PDU a request ID. As defined in Internet RFC 1157, the DAVIC Element puts the request ID of the received PDU in the corresponding GetResponse-PDU so the DAVIC System Manager can correlate the response with the request. The range of possible request IDs is large enough that a DAVIC System Manager will not re-use a request ID soon after the ID's last use, thereby helping to avoid incorrect matching of request and response PDUs. DAVIC System Managers shall use the full range of possible request IDs.

The DAVIC System Manager shall maintain a list of request IDs and the requested operations for outstanding PDUs in order to match responses to requests. If the request ID of a received GetResponse-PDU is in the list, the DAVIC System Managers shall process the PDU and remove the corresponding entry from the list. If the request ID is not in this list, the DAVIC System Managers shall discard the PDU.

The MIB for Usage Data presented in subclause 9.2 contains tables that will hold Usage Records, with each row of a table representing a specific Usage Record. A particular table row (i.e., Usage Record) can be designated for removal from a MIB table by using the set operation supported by the SetRequest-PDU to set the value of a designated column to *invalid* for that row. In this case, the MIB definitions for tables must

 © ISO/IEC 1999 - All rights reserved

Copyright International Organization for Standardization
Provided by IHS under license with ISO
No reproduction or networking permitted without license from IHS Not for Resale

indicate which column is to be used for row deletion. Once a row is marked as being *invalid*, the DAVIC Element shall make that row inaccessible.

As explained above, a DAVIC System Manager sets the value of a managed object to a specific value using the SetRequest-PDU. A DAVIC System Manager can set the value of multiple managed objects with a single SetRequest-PDU. In order to maintain data integrity, a DAVIC Element receiving such a PDU shall update either all the managed objects as requested in the PDU or none of them, thereby achieving transaction atomicity.

9.1.1.2 Security

This section describes the security mechanisms specified for use with SNMPv1. SNMPv1 uses the concept of a community as a basis for security. For DAVIC, a *community* would be a pre-defined relationship between a DAVIC Element and one or more DAVIC System Managers. Each community has associated with it a view of the MIB supported by a DAVIC Element. This MIB view is the set of managed objects that are visible to a given community. For each community, an access mode, either *read-only* or *read-write* is defined for each managed object in the community's MIB view. Also, the MIB itself defines an access mode for each managed object, which can be *read-only*, *read-write*, *write-only*, or *not-accessible*. The intersection of the defined community and MIB access modes determines the type of access a member of a particular community has to each managed object in the MIB view.

A DAVIC System Manager and DAVIC Element indicate a community by passing an unencrypted password, a *community name*, in each PDU. The community name is provided by the user of the SNMPv1 service. For DAVIC System Managers, the user is either the DAVIC System Manager itself or an administrator using the DAVIC System Manager. For a DAVIC Element the user is the DAVIC Element itself. DAVIC Elements and DAVIC System Managers shall pass the user-provided community name in the community field of each PDU.

DAVIC Elements and DAVIC System Managers shall maintain a list of acceptable community names and compare the community name in each received PDU with this list. If the community name is in a DAVIC Element's list, the DAVIC System Manager sending the request shall be granted access to the managed objects in the MIB view for the community in accordance with the access modes defined for this community. If a community name is in a DAVIC System Manager's list, the DAVIC System Manager shall accept the PDU information sent from a DAVIC Element. When a DAVIC Element receives a community name that is not in the DAVIC Element’s community name list, the DAVIC Element shall send a generic authentication failure trap to the associated DAVIC System Manager(s) and shall discard the PDU. The sending of generic traps for such an authentication failure is a fundamental part of SNMPv1. Since DAVIC System Managers do not generate traps, a DAVIC System Manager that has received a PDU containing an invalid community name shall simply discard the PDU.

9.1.1.3 PDU logging

The DAVIC Element and DAVIC System Managers should record all SNMPv1 PDUs received and sent. This record of SNMPv1 communications could subsequently be used to identify problems with the components themselves or the network being used. The method used to record, maintain, and delete this information is the responsibility of the supplier.

9.1.2 CMIP

This subclause describes a CMIP based Usage Information model for use in the DAVIC core network. The model may also be used on the DAVIC access network if the terminals can support this functionality.

The model allows for the control of Usage Information recording, the forwarding of Usage Information in real-time or as bulk data and supports Usage Data collection for both the network transport infrastructure and the application services. The text defines separate record types for the collection of service type and delivery system type information. By defining separate records for the service usage and the transport, various different billing strategies and partnering scenarios can be supported. The two record types are the Service Usage Record and the Delivery System Usage Record. Collectively these two records will be referred to as Usage metering Records (UMR).

The functionality supported is designed to fit into the public network TMN structure.

Copyright International Organization for Standardization
Provided by IHS under license with ISO
No reproduction or networking permitted without license from IHS Not for Resale

9.1.2.1 TMN Management Functions

The Usage metering function described here uses the following OSI System Management Functions (SMFs)

- Object Management Function (CCITT X.730);
- State Management Function (CCITT X.731);
- Alarm Reporting Function (CCITT X.733);
- Event Reporting Management Function (CCITT X.734);
- Log Control Function (CCITT X.735);
- Usage metering Function (CCITT X.742).

The data collection management service component employs both the event reporting function (CCITT X.734) and log control function (CCITT X.735). The conceptual model is illustrated in Figure 11-7.

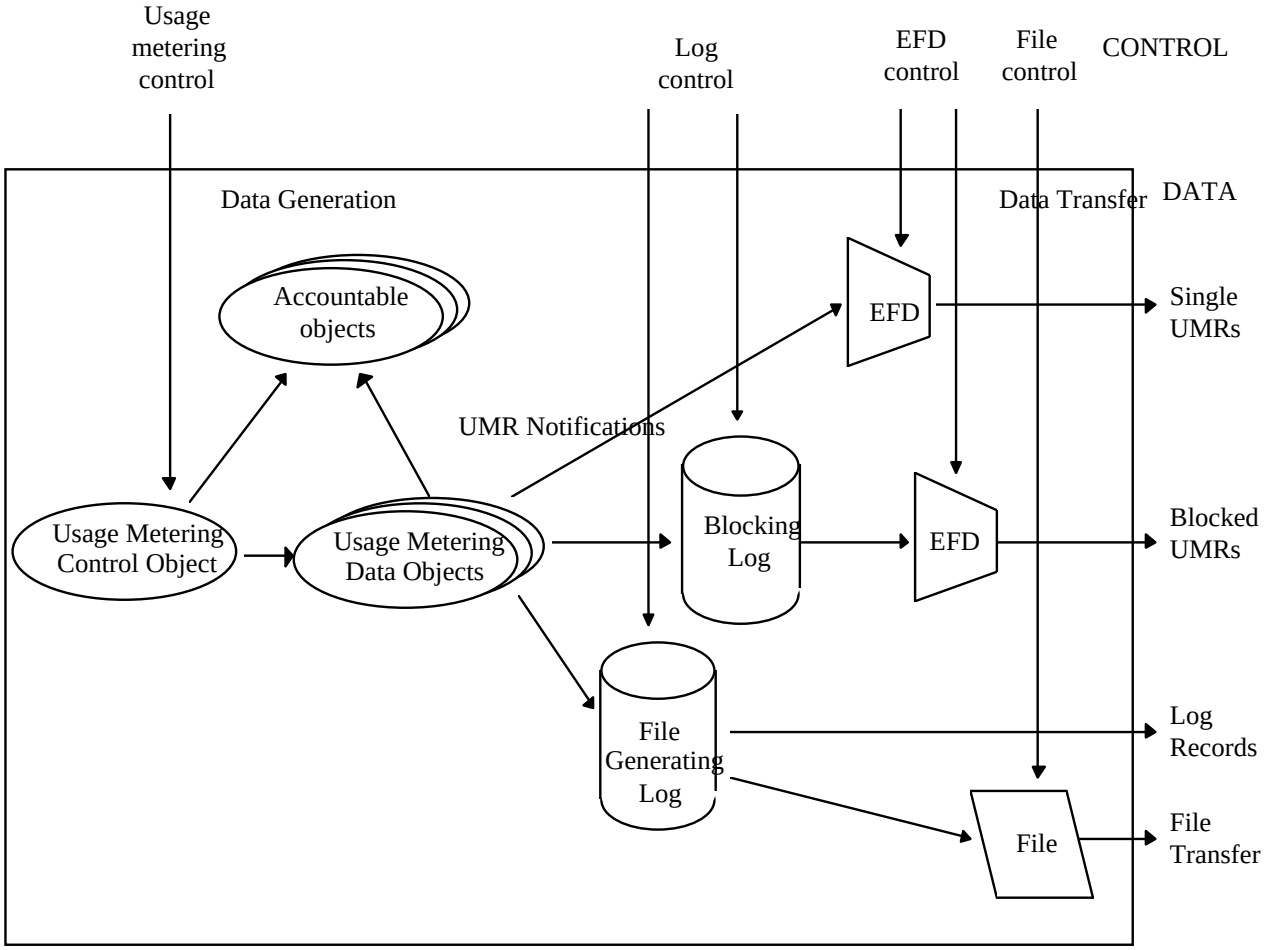

Figure 11-7 — Data collection mode

9.1.2.2 Model Functional Overview

Recommendation X.742 defines the following object classes to control and collect the Usage Metering Data:

- **Usage metering control object** that is used to control the collection of Usage Data for one or more accountable (resource being used) objects;
- **Usage Metering Data object** that contains the collected information.

The accountable object may be any resource (logical or physical) for which usage is to be measured. Examples of such resources could be: Directory Numbers, STUs, etc. The collected Usage Data is stored in the usage metering data object which is contained in the accountable object (representing the resource whose

 © ISO/IEC 1999 - All rights reserved

Copyright International Organization for Standardization
Provided by IHS under license with ISO
No reproduction or networking permitted without license from IHS
Not for Resale

usage is being measured). Notifications containing the measured data will be emitted by the Usage Metering Data Object, upon the ocurrence of a reporting trigger, and may be stored in the local log thus forming the usage metering record, or may be transmitted to a remote OS as specified in an event forwarding discriminator. In addition, for efficent transmission, the individual notifications may be blocked into groups for near real-time Usage Data reporting. This blocking is accomplished by temporarily storing two types(Service Usage Record and Delivery System Usage Record) of Usage metering Records (UMRs) in a blockingLog and then generating a new notification from that log upon ocurrrence of a reporting trigger.

Usage Metering Data objects are created and deleted implicitly, that is, they are created and deleted upon the occurrence of defined trigger events and do not have to be explicitly manipulated by a managing system. To support recording data in a UMD object two sets of triggers are defined:

- Creation Triggers: events that cause creation of a UMD object, these triggers are defined as part of the control object.
- Termination Triggers: events that cause deletion of a UMD object, these triggers are defined as part of the data object. Currently the termination triggers are defined implicitly as part of the data object behaviour. Deletion occurs upon completion of Usage Data collection and emission of the corresponding notification for that instance of service usage.

UMR notifications are emitted in response to reporting triggers that are also defined as part of the usage metering control object.

This specification defines the simpleUsageMeteringControl Object class that allows the definition of different trigger valuess for usage metering recording. These values are defined in X.742. One of the defined values allows periodic reporting and can be used to transfer partial Usage Data to a log or remote OS for long duration usage. Another value of the trigger specifies the occurrence of a particular events that will cause reporting, e.g. completion of usage.

The data itself is collected in response to the recording triggers.

9.1.2.3 Data generation control and notification

This service component contains the following groups of TMN Management Functions:

- Usage metering control
- Usage Metering Data

9.1.2.3.1 Usage metering control

The following control functions are available:

1. Recording Control: Allows control to select, from the potential recordable events, the ones for which a record should actually be generated. This control function enables the reduction of records collected in a NE. The record generation can be triggered to make a record for events based on several types of criteria such as calling party data (subscriber with itemised billing), destination, incoming trunk group, first digit dialled, etc. These criteria may be described in the recordingTriggers and creationTriggers attributes of the control object. If a potentially recordable call matches the criteria specified in the creationTriggers attribute, a record is generated. If the creationTriggers list is empty, each potentially recordable event leads to the generation of a record.
2. Reporting Control: This control allows specification of the conditions under which a UMR notification will be omitted by the Usage Metering Data object. The triggers may be events occuring during the life of the service or based on elapsed time since the last notification or start of service. This function covers the need for specification of a partial record interval timer for long hold calls. The timer may take any value within the range of 10 minutes to 24 hours. A value 0 means that no partial records will be generated.

9.1.2.3.2 Usage Metering Data

This object emits the UMR notification for usage selected by the Usage metering control function. A UMR notification may be sent out if one of the following events occur during the transaction:

- termination of a service;
- change of service e.g. due to change of charging conditions;

--`,,```,,,,````-`-`,,`,,`,`,,`---

Copyright International Organization for Standardization
Provided by IHS under license with ISO
No reproduction or networking permitted without license from IHS Not for Resale

- reaching a volume threshold - this may also be due to NE internal reasons;
- at regular intervals during a practical service transaction - expiration of the periodic timer (defined in the Usage metering control);

For service usage only complete records at the termination of service are supported. For the delivery system any of the above listed events may cause a record to be generated. This is to allow the connection to be reused for multiple instances of services, e.g. successive movies or pay-per-view events without requiring tear-down of the connection.

9.1.2.4 Data transfer control

This service component provides the following functionality: :

- UMR forwarding via EFD
- UMR forwarding via the blocking Log (for near real-time applications)
- UMR transfer via the file generating Log (for bulk billing applications)

The functions are NOT mutually exclusive.

9.1.2.4.1 Real-time UMR forwarding via EFD

These TMN functions control the generation and transmission of notifications from NEF to the OSF. Event reporting will normally be used for hot billing purposes. To simplify filtering by the EFD, a special Boolean field "immediate notification" is included in the UMR, which can be screened by the EFD. If the value is TRUE, the UMR is forwarded as an event report. The value of the field may be derived by a subscriber action or by other means specific to the implementation.

The forwarding of record notifications, generated by the UMR Generation Data function, to the OS is managed by the use of the Event Report Systems Management Function as defined in CCITT X.734 and CCITT X.721. The prescence of more than one OS interested in real time collection of Usage Metering Data may be a practical issue. "Hot billing" may be requested for different purposes by different OSs at the same time. The possibility of multiple instances of the usageMeteringEFD is therefore not precluded.

9.1.2.4.2 Near Real-time UMR forwarding via blocking log

To enable the NEF to transfer blocks of UMRs to the OSF with a higher efficiency than the standard EFD, individual notifications may be blocked and transfered as a single unit by first storing these notifications in the blocking logUsage Metering Data may be requested for different purposes by different OSs at the same time. The possibility of multiple instances of the blockingLog is therefore not precluded.

Emission of a blockedRecord notification may be triggered by one of the following events:

- maximum time period elapsed;
- maximum number of UMRs reached;
- internal size limit reached.

If more than one trigger is used at the same time the precedence of the triggers is as defined below.

9.1.2.4.2.1 Time period elapsed

The maxTimeInterval attribute specifies the maximum amount of time that is allowed to elapse prior to generation of a blocked UMR notification. That means, that the block transfer is triggered periodically e.g. every n seconds or minutes. The time period is also reset to zero if another event happens.

9.1.2.4.2.2 Maximum number of UMRs reached

This maxBlockSize attribute of the blocking log specifies the maximum number of UMRs to be included in a blockedRecord notification. An internal counter within the blocking log counts the number UMRs currently in the log. If the value maxBlockSize is reached, a "blockedRecordNotification" is emitted, the contained records are deleted and the internal counter is reset to zero. The internal counter is also reset to zero if another notification triggering event happens.

 © ISO/IEC 1999 - All rights reserved

Copyright International Organization for Standardization
Provided by IHS under license with ISO
No reproduction or networking permitted without license from IHS Not for Resale

9.1.2.4.2.3 Internal size limit reached

If there is an internal implementation specific limit of the length of a notification (buffer size, max. message length, etc.), this may be signalled internally to the blocking log, which will emit a notification with the trigger cause "internal size limit reached".

9.1.2.4.3 UMR transfer via file generating Log

The special "fileGeneratingLog" is derived from the standard log function as defined in X.735.

The record notifications generated by the UMR Generation Data object instance are stored locally in the NE using the logging functionality described in X.735.

The following system management functions are required:

Get/Delete	UsageMeteringLogEntry
Create/Delete	UsageMeteringLog

Besides the functions for retrieval and deletion of log entries provided by the X.735 log control, the FileGenerating Log control provides an extra functionality to support retrieval of UMR records through the TMN file transfer protocol (FTAM) (or any other appropriate file transfer protocol). This functionality is supported by providing for the creation of a UsageMeteringRecordFile either by means of create request from the OS or a trigger event internal to the NE. When the file has been created a notification is emitted allowing managing systems to be notified of the existance of the file. The records copied to the file will be retained in the log until explicitly deleted by a managing system. This allows for persistance of Usage Data until the integrity of the received Usage Data has been verified. Automatic deletion of the contained records may be specified as a parameter of the file creation action for OS initiated file creation requests or by a configuration attribute in the log for files createdf due to internal system reasons.

The prescence of more than one OS interested in collection of Usage Metering Data may be a practical issue. Usage Metering Data may be requested for different purposes by different OSs at the same time. The possibility of multiple OS's accessing the fileGenerating Log and UsageMeteringRecordFile is therefore not precluded.

If more than one file creation trigger is used, there is an interworking between these as defined below.

9.1.2.4.3.1 Absolute Time event

For the time trigger the internal scheduling mechanism and only the aperiodic scheduling (trigger) packages (daily, weekly and monthly scheduler) as defined in X.746 is used. That means, that transfer of log data to the file store is triggered at absolute times. The absolute time scheduling is not reset, if another triggering event happens.

9.1.2.4.3.2 Internal size limit reached

If there is an internal implementation specific limit of the length of a file or Log (buffer size, max. message length, etc.), this may be signalled internally to the Log, which may create a new file with the file trigger cause "internal size limit reached".

9.1.2.4.3.3 Action from OS

When requested by the OS, the records in the log are copied to a file. The action may contain optionally the filename as a parameter and an indication that the contained records are to be deleted upon succesful creation of the file.

9.1.2.4.3.4 Filenames

For the automatic events, the filename is created automatically by the NE. In case of the action from OS, a specific filename can be given, which overrides the automatic file naming.

9.1.2.4.3.5 Filetransfer

File transfer from the NE is initiated by the OS and in the TMN environment, uses FTAM.

--`,,```,,,,````-`-`,,`,,`,`,,`---

Copyright International Organization for Standardization
Provided by IHS under license with ISO
No reproduction or networking permitted without license from IHS Not for Resale

9.1.2.4.3.6 Processing of Blocked Records and UMR Files at the Receiving OS

If the receiving OS is an intermediate OS that makes data available to other OSs that data can be stored in its original record format, by expanding the stripped records with the information from the header and including the current logging time and a new recordId in the record. Upstream OSs can then manipulate this log like any other file generating Log.

9.1.2.5 Generation of Usage Records

Service Usage Records are created in order to allow metering and billing for the use of application services riding on the DAVIC delivery system. Separate usage records are generated for the application service and for usage of the delivery system. Correlation of these records can be done by means of a session id or correlation key. This approach allows full flexibility for environments where the content and transport are provided by separate providers and does not require the use of shared records. This approach also allows the same delivery system resources to be reused for multiple instances of application services, e.g. successive videos or successive interactive games, where the charge may be per video/game and cumulative holding time.

9.1.2.5.1 Generation of Service Usage Records

Service Usage Records (SURs) are generated for every single instance of service usage. SURs are generated at termination of the service. Termination may be normal or abnormal. Each service record contains information concerning all events and actions that occurred during the service. For instance, for VOD, information about rewinds and pauses will be contained in the record.

Separate records are generated for each instance of service. An instance of a service consists of an item identified by a single content name. I.e. each SUR can only contain a single content name, if the content changes a new record must be generated.

SURs contain the following information:

User Information: This includes the subscriber identification and the identification of the actual consumer of the service. This capability is supported by the following attributes:

serviceSubscriberId

This attribute identifies the subscriber who is responsible for the service subscription . This is the party that has overall financial responsible for that subscription. This information is mandatory.

serviceConsumerId

This attribute identifies the actual user of the service. It need not be the subscriber. The identifier may have been provided to the service provider by, for example, an electronic smart-card. This information is optional.

Provider Information: This information includes the identity of the service provider and optionally the server. This capability is supported by the following attributes:

ServiceProviderId

This attribute identifies the provider of the application service. This information is mandatory.

serverId

This attribute identifies the server providing the content. This information is optional.

 © ISO/IEC 1999 - All rights reserved

Copyright International Organization for Standardization
Provided by IHS under license with ISO
No reproduction or networking permitted without license from IHS Not for Resale

STU Information: The record requires that details of the STU be provided. The parameters required are the STU identity, the STU and the version. This capability is supported by the following attributes:

sTUId

sTUType

sTUTVersion

Usage Information: The record specifies details about the application, content and events that occurred during service usage. This capability is supported by the following attributes:

applicationType:

This attribute identifies the application being used by the serevice consumer. Valid values include video-on-demand and pay per view. The valid value set will grow as the capabilities of DAVIC are increased in subsequent releases. This information is mandatory.

contentId:

This attribute identifies the application content that is provided to the user. It is a visible string that displays the title of the content. This allows unambiguous identification of the program material. This information is mandatory.

usageEventInformationList:

This attribute has a complex syntax that allows specification of all events occurring during service usage. This information is mandatory.

The attribute consists of a list of events and associated time or count information.

Events may be classified into two types: Events that have a duration and events that occur at discrete time instances. For events that have duration and for which billing will be based on duration (e.g. interactive games) the duration must be specified. This may be done by specifying either the start time and end time or the start time and duration. Both methods are supported.

For events that occur at discrete time instances the record can either specify the event type and the time at which it occurred or, if occurrence time is of no interest, the event type and a cumulative count of the number of times the event occurred during the service instance.

serviceReleaseCause:

This attribute provides the cause for termination of the service. The value specified allows indication that the underlying network service provider released the connection, however, details concerning the cause for the network release are not specified. This information is mandatory.

dataValidity:

This attribute indicates whether or not the generating DAVIC Element has suffered the occurrence of an event that may cause the collected Usage Data to be corrupted. This information is mandatory.

--`,,```,,,,````-`-`,,`,,`,`,,`---

Copyright International Organization for Standardization
Provided by IHS under license with ISO
No reproduction or networking permitted without license from IHS Not for Resale

Pricing Information: The consumer may have requested or been supplied with a price quote for the service, if that was the case the record will contain a parameter specifying the quote given to the user. This capability is supported by the following attribute:

quotedPrice:

This attribute contains the price that was quoted to the consumer for use of the service. The price quote may have been made in advance, during or after the service (e.g. advice of charging). The quoted price is expected to be the maximum price the user will pay. Discounts based on total subsequent usage may reduce the actual amount the consumer will be charged. This attribute must be present if the consumer was given a quote.

9.1.2.5.2 Generation of Delivery System Usage Records

Delivery System Usage Records are created in order to allow metering of transport and hardware resources. These resources may be used for multiple services, either simultaneously or consecutively. The time period for which these resources are used may be quite long, therefore, partial record generation is supported for DSURs.

DSURs can span multiple application service usage instances if the characteristics of the connection and used resources remain unchanged. However, if different services require different characteristics, e.g. more bandwidth or different quality of services then the current record will be closed and a new record will be generated indicating that a mid-call modification occurred and opening a new record. The correlation key and/or call identification number can be used to correlate the individual records to obtain cumulative charges, if required.

DSURs contain the following information:

User Information: This includes the identity of the originating and terminating parties, and for those services where diversion can occur, the identity of other parties involved in the call. The actual user of the service can also be identified. This capability is supported by the following attributes:

callingPartyNumber:

This information is mandatory.

calledPartyNumber:

This information is mandatory.

Delivery System Information: This information specifies the bearer service used to support the applications. This capability is supported by the following attribute:

bearerService:

This attribute specifies the characteristics of the network connection(s) used to support the application. In the case of multimedia services using multiple ATM connections, the attribute becomes complex and contains the characteristics of each ATM VC/VP. This information is mandatory.

Charging Information: This information specifies the charges incurred for use of the bearer service. This capability is supported by the following attributes:

chargingInformation:

This attribute contains the details of the charges incurred for delivery system usage.

personalCode:

This attribute contains the account or credit card number to be used for billing.

ChargedParticipant:

This attribute allows identification of the party that will be charged for the delivery system usage. For instance, this would allow the content provider (the called party) to be billed for network resource usage and charge a flat rate for the content, as might be the case for pay-per-view and VOD.

 © ISO/IEC 1999 - All rights reserved

--`,,```,,,,````-`-`,,`,,`,`,,`---

Copyright International Organization for Standardization
Provided by IHS under license with ISO
No reproduction or networking permitted without license from IHS Not for Resale

9.2 Usage Data Structures

9.2.1 SNMP MIB

The following is an SNMP MIB for the Usage Data to be generated to account for the use of application services riding on the DAVIC delivery system. At the present, the supported services are Movie on Demand, Near Movie on Demand, and Pay Per View. Separate usage records are generated for the application service and for usage of the delivery system. This MIB also contains managed objects for controlling the collection of the Usage Data defined in the MIB, with actual data collection potentially being accomplished through file transfer. Four notifications(also known as Trap in SNMP context) are defined for the real-time forwarding of usage records to the DAVIC System Manager. The MIB is called the *DAVIC Usage MIB*. The MIB definitions use the SNMP V2 SMI (Structure of Management Information) syntax to support notifications and some textual conventions; however, a minimal number of SNMPv2-specific SMI features have been used, to facilitate straightforward translation to SNMPv1 syntax for backward compatibility with the large installed base of SNMPv1 management systems.

The MIB objects defined here constitute the Phase I MIB, minimum managed objects for the above mentioned application services and delivery systems usage. However, it is expected that the Usage MIB will be augmented to support additional services in a future version of the specification to make the specification more complete.

The need for the generation of the sets of Usage Data defined in the Usage MIB is mainly driven by billing, but is also relevant to, and in some cases driven by, marketing. The anticipated purpose of the generation of each set of managed objects presented below is indicated in the MIB.

The Service Provider identifier defined in the Usage MIB must be globally unique to optimize the effectiveness of billing for the services addressed by the MIB. For this identifier, a recognized authority must be established to distribute identifiers to the industry. DAVIC is a potential candidate for this role.

The Usage MIB is organized into four groups: a Service Usage Record group, a delivery system usage group, an usage collection control group, and an usage record notification group.

Definitions

```
DAVIC-USAGE-MIB DEFINITIONS ::= BEGIN

IMPORTS
  enterprises
     FROM RFC1155-SMI
  IpAddress, OBJECT-TYPE, MODULE-IDENTITY, NOTIFICATION-TYPE
     FROM SNMPv2-SMI
  DateAndTime, RowStatus, TruthValue, DisplayString, TEXTUAL-CONVENTION
     FROM SNMPv2-TC;

davicUsageSNMP  MODULE-IDENTITY
     LAST-UPDATED "9803141700Z"
```


Copyright International Organization for Standardization
Provided by IHS under license with ISO
No reproduction or networking permitted without license from IHS Not for Resale

```
        ORGANIZATION "DAVIC"
        CONTACT-INFO
            "Name:  DAVIC Secretariat
            Postal:  c/o Societa' Italiana Avionica Spa
                     Strada Antica di Collegno, 253
                     I-10146 Torino - Italy
            Phone:  +39 011 7720 114
            Fax:    +39 011 725 679
            Email:  secretariat@davic.org "
DESCRIPTION
            "The MIB specifies the second version management information for the Usage Data to be generated
             to account for the use of DAVIC resources."
::= {iso(1) org(3) dod(6) internet(1) private(4) enterprises(1) davic(1493) davicUsageSNMP(3)}


-- DAVIC SNMP Usage V2 MIB subtree
serviceUsageRecordGroup             OBJECT IDENTIFIER ::= {davicUsageSNMP  1}
deliverySystemUsageRecordGroup      OBJECT IDENTIFIER ::= {davicUsageSNMP  2}
usageCollectionControlGroup         OBJECT IDENTIFIER ::= {davicUsageSNMP  3}
usageRecordNotificationGroup        OBJECT IDENTIFIER ::= {davicUsageSNMP  4}

-- Service Usage Record Group
-- This group contains two tables that are closely related with the collection of service Usage Information.
-- One table is serviceUsageRecordTable and the other is usageEventInfoTable.


-- Service Usage Records (SURs) are generated for every single instance of service usage. SURs are
-- generated at termination of the service. Termination may be normal or abnormal. Each service record
-- contains information concerning all events and actions that occurred during the service. For instance,
-- for VOD, information about rewinds and pauses will be contained in the record.
-- Separate records are generated for each instance of service. An instance of a service consists of an
-- item identified by a single content name. I.e. each SUR can only contain a single content name, if the
-- content changes a new record must be generated-- This set of managed objects defines the Usage
-- Records to be generated to account for the addressed


-- Usage event information should be part of the Service Usage Record table but its value is complex type
-- such that it cannot be represented as a single columnar object.  Thus, its information is captured in
-- the table, instead.


serviceUsageRecordTable OBJECT-TYPE
        SYNTAX SEQUENCE OF ServiceUsageRecordEntry
        MAX-ACCESS not-accessible
```

 © ISO/IEC 1999 - All rights reserved

Copyright International Organization for Standardization
Provided by IHS under license with ISO
No reproduction or networking permitted without license from IHS Not for Resale

```
        STATUS current
        DESCRIPTION
            "This table has a row for every single instance of service usage at termination of the service.
            Termination may be normal or abnormal. Each service record contains information concerning all
            events and actions that occurred during the service. For instance, for VOD, information about
            rewinds and pauses will be contained in the record.  Separate records are generated for each instance
            of service."
        ::= { serviceUsageRecordGroup 1 }

serviceUsageRecordEntry OBJECT-TYPE
        SYNTAX ServiceUsageRecordEntry
        MAX-ACCESS not-accessible
        STATUS current
        DESCRIPTION
            " This represents an entry in the serviceUsageRecordTable."
        INDEX { serviceUsageRecordIndex }
        ::= { serviceUsageRecordTable 1 }

ServiceUsageRecordEntry ::=  SEQUENCE {
        serviceUsageRecordIndex                 INTEGER,
        serviceSubscriberId                     DisplayString,
        sTUId                                   DisplayString,
        sTUType                                 DisplayString,
        sTUVersion                              DisplayString,
        serviceProviderId                       DisplayString,
        applicationType                         INTEGER,
        contentId                               INTEGER,
        serviceReleaseCauseIndication           INTEGER,
        serviceUsageGeneratingDAVICElementId    DisplayString,
        serviceUsageGeneratingDAVICElementType  DisplayString,
        dataValidity                            TruthValue,
        serviceConsumerId                       DisplayString,
        quotedPriceAmount                       DisplayString,
        quotedPriceCurrencyUnit                 DisplayString,
        dataGeneratingElementCorrelationKey     INTEGER,
        contentServerId                         DisplayString,
        dataPriority                            INTEGER,
        usageGradeOfService                     INTEGER,
        serviceUsageRecordStatus                RowStatus
}
```


Copyright International Organization for Standardization
Provided by IHS under license with ISO
No reproduction or networking permitted without license from IHS Not for Resale

serviceUsageRecordIndex OBJECT-TYPE

SYNTAX INTEGER (1..2147483647)

MAX-ACCESS read-only

STATUS current

DESCRIPTION

"This attribute is the index of the serviceUsageRecordTable."

::= { serviceUsageRecordEntry 1 }

serviceSubscriberId OBJECT-TYPE

SYNTAX DisplayString (SIZE(1..32))

MAX-ACCESS read-only

STATUS current

DESCRIPTION

"This attribute identifies the subscriber who is responsible for the service subscription . This is the party that has overall financial responsibility for that subscription."

::= { serviceUsageRecordEntry 2 }

sTUId OBJECT-TYPE

SYNTAX DisplayString (SIZE(1..12))

MAX-ACCESS read-only

STATUS current

DESCRIPTION

" This attribute identifies the individual set top unit and must be unique at least within the scope of service and network providers that access the information."

::= { serviceUsageRecordEntry 3 }

sTUType OBJECT-TYPE

SYNTAX DisplayString (SIZE(1..32))

MAX-ACCESS read-only

STATUS current

DESCRIPTION

" This attribute identifies the set top unit type. The type allows identification of the capabilities that the set top unit possesses and may be used in billing and service selection."

::= { serviceUsageRecordEntry 4 }

sTUVersion OBJECT-TYPE

SYNTAX DisplayString (SIZE(1..10))

MAX-ACCESS read-only

STATUS current

DESCRIPTION

 © ISO/IEC 1999 - All rights reserved

--`,,```,,,,````-`-`,,`,,`,`,,`---

Copyright International Organization for Standardization
Provided by IHS under license with ISO
No reproduction or networking permitted without license from IHS Not for Resale

" This attribute identifies the version of the software and hardware of the set top unit. This information may be useful in interpreting the Usage Data received from the STU."

::= { serviceUsageRecordEntry 5 }

serviceProviderId OBJECT-TYPE

SYNTAX DisplayString (SIZE(1..8))

MAX-ACCESS read-only

STATUS current

DESCRIPTION

" This attribute identifies the provider of the application service."

::= { serviceUsageRecordEntry 6 }

applicationType OBJECT-TYPE

SYNTAX INTEGER {

videoOnDemand(0),

nearVideoOnDemand(1),

payPerView(2)}

MAX-ACCESS read-only

STATUS current

DESCRIPTION

" This attribute identifies the application being used by the service consumer. Valid values include video-on-demand and pay per view. The valid value set will grow as the capabilities of DAVIC are increased in subsequent releases."

::= { serviceUsageRecordEntry 7 }

contentId OBJECT-TYPE

SYNTAX INTEGER (1..16777216)

MAX-ACCESS read-only

STATUS current

DESCRIPTION

" This attribute identifies the application content that is provided to the user."

::= { serviceUsageRecordEntry 8 }

serviceReleaseCauseIndication OBJECT-TYPE

SYNTAX INTEGER {

normal(1),

serviceConsumerRequestPrematureServiceEnd(2),

serviceProviderInitiatedPrematureServiceEnd(3),

networkRelease(4),

abnormalServiceTerminationAtServiceConsumerSide(5),

--`,,```,,,,````-`-`,,`,,`,`,,`---

Copyright International Organization for Standardization
Provided by IHS under license with ISO
No reproduction or networking permitted without license from IHS Not for Resale

abnormalServiceTerminationAtServiceProviderSide(6)}

MAX-ACCESS read-only

STATUS current

DESCRIPTION

" This attribute provides the cause for termination of the service. The value specified allows indication that the underlying network service provider released the connection, however, details concerning the cause for the network release are not specified."

::= { serviceUsageRecordEntry 9 }

serviceUsageGeneratingDAVICElementId OBJECT-TYPE

SYNTAX DisplayString (SIZE(1..10))

MAX-ACCESS read-only

STATUS current

DESCRIPTION

" This attribute identifies the DAVIC Element that generated the Usage Data."

::= { serviceUsageRecordEntry 10 }

serviceUsageGeneratingDAVICElementType OBJECT-TYPE

SYNTAX DisplayString (SIZE(1..6))

MAX-ACCESS read-only

STATUS current

DESCRIPTION

" This attribute identifies the element type of the device that generated the Usage Data. e.g. STU type, server type, switch type, etc."

::= { serviceUsageRecordEntry 11 }

dataValidity OBJECT-TYPE

SYNTAX TruthValue

MAX-ACCESS read-only

STATUS current

DESCRIPTION

" This attribute provides an indication whether or not the Usage Data being provided is accurate and complete. The data may be corrupted due to failures occurring in the DAVIC Element during the service."

::= { serviceUsageRecordEntry 12 }

serviceConsumerId OBJECT-TYPE

SYNTAX DisplayString (SIZE(1..16))

MAX-ACCESS read-only

STATUS current

DESCRIPTION

 © ISO/IEC 1999 - All rights reserved

--`,,```,,,,````-`-`,,`,,`,`,,`---

Copyright International Organization for Standardization
Provided by IHS under license with ISO
No reproduction or networking permitted without license from IHS Not for Resale

" This attribute the actual user of the service. It need not be the subscriber. The identifier may have been provided to the service provider by, for example, an electronic smart-card."

::= { serviceUsageRecordEntry 13 }

quotedPriceAmount OBJECT-TYPE

SYNTAX DisplayString (SIZE(1..32))

MAX-ACCESS read-only

STATUS current

DESCRIPTION

" This attribute contains the price amount that was quoted to the consumer for use of the service. The price quote may have been made in advance, during or after the service (e.g. advice of charging). The quoted price is expected to be the maximum price the user will pay. Discounts based on total subsequent usage may reduce the actual amount the consumer will be charged."

::= { serviceUsageRecordEntry 14 }

quotedPriceCurrencyUnit OBJECT-TYPE

SYNTAX DisplayString (SIZE(1..32))

MAX-ACCESS read-only

STATUS current

DESCRIPTION

" This attribute provides currency unit of the price quoted to the Service Consumer for a service. This managed object may be changed to support any existing standards for referencing currency units. This data element is mandatory if real-time pricing is performed for the service usage."

::= { serviceUsageRecordEntry 15 }

dataGeneratingElementCorrelationKey OBJECT-TYPE

SYNTAX INTEGER

MAX-ACCESS read-only

STATUS current

DESCRIPTION

" This attribute allows correlation of information generated in a single DAVIC Element."

::= { serviceUsageRecordEntry 16 }

contentServerId OBJECT-TYPE

SYNTAX DisplayString (SIZE(1..10))

MAX-ACCESS read-only

STATUS current

DESCRIPTION

" This attribute identifies the Content Server involved in the service session.. This data element should be generated by an STU and (potentially) a Service Related Control DAVIC Element when generating Usage Records to account for service sessions involving a Content Server. A Content Server should not generate this data element when generating a Usage Record since the Server’s identifier will be captured by the usageDataRecordingElementIdentifier managed object."

Copyright International Organization for Standardization
Provided by IHS under license with ISO
No reproduction or networking permitted without license from IHS Not for Resale

```
    ::= { serviceUsageRecordEntry 17 }

dataPriority OBJECT-TYPE
    SYNTAX    INTEGER {
                realTime(1),
                nonRealTime(2)}
    MAX-ACCESS        read-only
    STATUS    current
    DESCRIPTION
        " This attribute specifies whether the data is required for real-time billing or not."
    ::= { serviceUsageRecordEntry 18 }

usageGradeOfService OBJECT-TYPE
    SYNTAX INTEGER {
        mpeg1(1),
        mpeg2(2)
    }
    MAX-ACCESS read-only
    STATUS current
    DESCRIPTION
        “This attribute specifies grade of service provided to the Service Consumer during service usage.
        The grade of service indicates the level of video quality, which is defined by the type of encoding
        performed on the delivered content.”
    ::= { serviceUsageRecordEntry 19 }

serviceUsageRecordStatus OBJECT-TYPE
    SYNTAX    RowStatus
    MAX-ACCESS        read-create
    STATUS    current
    DESCRIPTION
        "This attribute specifies the current status of the entry."
    ::= { serviceUsageRecordEntry 20 }

-- Usage Event Information Table:  This table provides the details concerning the way the service was
-- used by the user.  Actually, the information collected in this table should be part of the
-- serviceUsageRecord table but the type of information to be specified is not simple rather complex type.
-- Thus the information is captured in the separate table and resides in the same group, “Service Usage
-- Record Group”.

usageEventInfoTable OBJECT-TYPE
```

 © ISO/IEC 1999 - All rights reserved

Copyright International Organization for Standardization
Provided by IHS under license with ISO
No reproduction or networking permitted without license from IHS Not for Resale

```
    SYNTAX SEQUENCE OF UsageEventInfoEntry
    MAX-ACCESS not-accessible
    STATUS current
    DESCRIPTION
        "This table provides the details concerning the way the service was used by the consumer.  It
        specifies every event generated by the user; e.g.  pausing, rewinding, stopping, and the associated
        duration of the event, if appropriate. "
    ::= { serviceUsageRecordGroup 2 }

usageEventInfoEntry OBJECT-TYPE
    SYNTAX UsageEventInfoEntry
    MAX-ACCESS not-accessible
    STATUS current
    DESCRIPTION
        " This represents an entry in the usageEventInfoTable."
    INDEX { usageEventInfoIndex }
    ::= { usageEventInfoTable 1 }

UsageEventInfoEntry ::=  SEQUENCE {
    usageEventInfoIndex                 INTEGER,
    usageEventInfoType                  INTEGER,
    usageEventType                      INTEGER,
    eventTime                           DateAndTime,
    eventStartTime                      DateAndTime,
    eventEndTime                        DateAndTime,
    eventDuration                       INTEGER,
    eventCount                          INTEGER,
    usageEventInfoStatus                RowStatus
}

usageEventInfoIndex OBJECT-TYPE
    SYNTAX     INTEGER  (1..2147483647)
    MAX-ACCESS         read-only
    STATUS     current
    DESCRIPTION
        "This is the index of the usageEventInfoTable."
    ::= { usageEventInfoEntry 1 }

usageEventInfoType OBJECT-TYPE
    SYNTAX     INTEGER {
```


Copyright International Organization for Standardization
Provided by IHS under license with ISO
No reproduction or networking permitted without license from IHS Not for Resale

```
                discreteEvent(1),
                timedEvent(2),
                durationEvent(3),
                countableEvent(4)}
    MAX-ACCESS      read-create
    STATUS      current
    DESCRIPTION
        " This attribute identifies the type of an event to be recorded."
    ::= { usageEventInfoEntry 2 }

usageEventType OBJECT-TYPE
    SYNTAX      INTEGER {
                serviceActive(0),
                servicePaused(1),
                rewinding(2),
                fastForward(3),
                skip(4),
                serviceDisruption(5)}
    MAX-ACCESS      read-create
    STATUS      current
    DESCRIPTION
        "This attribute identifies the event generated by the user."
    ::= { usageEventInfoEntry 3 }

eventTime OBJECT-TYPE
    SYNTAX      DateAndTime
    MAX-ACCESS      read-create
    STATUS      current
    DESCRIPTION
        " This attribute identifies the time that an event occurred."
    ::= { usageEventInfoEntry 4 }

eventStartTime OBJECT-TYPE
    SYNTAX      DateAndTime
    MAX-ACCESS      read-create
    STATUS      current
    DESCRIPTION
        " This attribute provides the event start time.  This attribute is used for TimedEvent and
        DurationEvent."
    ::= { usageEventInfoEntry 5 }
```

 © ISO/IEC 1999 - All rights reserved

Copyright International Organization for Standardization
Provided by IHS under license with ISO
No reproduction or networking permitted without license from IHS Not for Resale

```
eventEndTime OBJECT-TYPE
    SYNTAX     DateAndTime
    MAX-ACCESS      read-create
    STATUS     current
    DESCRIPTION
        " This attribute provides the event ending time and is used for TimedEvent only."
    ::= { usageEventInfoEntry 6 }

eventDuration OBJECT-TYPE
    SYNTAX     INTEGER
    MAX-ACCESS      read-create
    STATUS     current
    DESCRIPTION
        "This attribute identifies the time spent since the event started and represented in seconds.  It is used
        for DurationEvent only."
    ::= { usageEventInfoEntry 7 }

eventCount OBJECT-TYPE
    SYNTAX     INTEGER
    MAX-ACCESS      read-only
    STATUS     current
    DESCRIPTION
        " This attribute counts the event in case of CountableEvents."
    ::= { usageEventInfoEntry 8 }

usageEventInfoStatus OBJECT-TYPE
    SYNTAX     RowStatus
    MAX-ACCESS      read-create
    STATUS     current
    DESCRIPTION
        " This attribute specifies the current status of the entry."
    ::= { usageEventInfoEntry 9 }


-- Delivery System Usage Record Group

-- This group contains tables that are closely related with the collection of delivery system usage
-- information.  Delivery System Usage Records (DSUR) are created in order to allow metering of
-- transport and hardware resources. These resources may be used for multiple services, either
```


Copyright International Organization for Standardization
Provided by IHS under license with ISO
No reproduction or networking permitted without license from IHS Not for Resale

```
-- simultaneously or consecutively. The time period for which these resources are used may be quite long,
-- therefore, partial record generation is supported for DSURs.  DSURs can span multiple application
-- service usage instances if the characteristics of the connection and used resources remain unchanged.
-- However, if different services require different characteristics, e.g. more bandwidth  or different
-- quality of services then the current record will be closed and a new record will be generated indicating
-- that a mid-call modification occurred and opening a new record.  The correlation key and/or call
-- identification number can be used to correlate the individual records to obtain cumulative charges, if
-- required.

deliverySystemUsageRecordTable OBJECT-TYPE
    SYNTAX SEQUENCE OF DeliverySystemUsageRecordEntry
    MAX-ACCESS not-accessible
    STATUS current
    DESCRIPTION
        " This table has a row for every single instance of delivery system usage of transport and hardware
        resources. These resources may be used for multiple services, either simultaneously or
        consecutively. The time period for which these resources are used may be quite long, therefore,
        partial record generation is supported for DSURs.  DSURs can span multiple application service
        usage instances if the characteristics of the connection and used resources remain unchanged.
        However, if different services require different characteristics, e.g. more bandwidth  or different
        quality of services then the current record will be closed and a new record will be generated
        indicating that a mid-call modification occurred and opening a new record. The correlation key
        and/or call identification number can be used to correlate the individual records to obtain cumulative
        charges, if required."
    ::= { deliverySystemUsageRecordGroup 1 }

deliverySystemUsageRecordEntry OBJECT-TYPE
    SYNTAX DeliverySystemUsageRecordEntry
    MAX-ACCESS not-accessible
    STATUS current
    DESCRIPTION
        " This represents an entry in the deliverySystemUsageRecordTable."
    INDEX { deliverySystemUsageRecordIndex }
    ::= { deliverySystemUsageRecordTable 1 }

DeliverySystemUsageRecordEntry ::=  SEQUENCE {
    deliverySystemUsageRecordIndex          INTEGER,
    startTimeStamp                          DateAndTime,
    bearerServiceCapability                 INTEGER,
    bearerServiceMultiplier                 INTEGER,
    serviceUser                             INTEGER,
    callingPartyNumber                      Number,
```

 © ISO/IEC 1999 - All rights reserved

Copyright International Organization for Standardization
Provided by IHS under license with ISO
No reproduction or networking permitted without license from IHS Not for Resale

```
    calledPartyNumber                       Number,
    calledIdentificationNumber              Number,
    immediateNotification                   TruthValue,
    networkReleaseCauseValue                INTEGER,
    networkReleaseCauseLocation             DisplayString,
    personalUserId                          DisplayString,
    partialGenerationRecordNumber           Number,
    partialGenerationRecordReason           INTEGER,
    deliveryUsageGeneratingDAVICElementId   DisplayString,
    deliveryUsageGeneratingDAVICElementType DisplayString,
    correlationKey                          INTEGER,
    chargingInfoType                        INTEGER,
    chargingInfoRecordedCurrency            DisplayString,
    chargingInfoRecordedNumberOfUnits       INTEGER,
    deliverySystemUsageDuration             INTEGER,
    networkProviderId                       DisplayString,
    deliverySystemUsageRecordStatus         RowStatus
}

deliverySystemUsageRecordIndex OBJECT-TYPE
    SYNTAX    INTEGER  (1..2147483647)
    MAX-ACCESS        read-only
    STATUS    current
    DESCRIPTION
        "This attribute is the index of the deliverySystemUsageRecordTable"
    ::= { deliverySystemUsageRecordEntry 1 }

startTimeStamp OBJECT-TYPE
    SYNTAX    DateAndTime
    MAX-ACCESS        read-only
    STATUS    current
    DESCRIPTION
        " This attribute contains a time stamp for the start of the call. The start time is defined as either the
        seizure time for a non-answered call, when the exchange is ready for receiving digits or for an
        answered call, the time when a call is answered, i.e. the receipt of an answer message.  If the UMR is
        generated by an event concerning a supplementary service not related to a call, then this information
        element contains the time stamp for that event.  Date and time values are derived from the exchange
        clock.  This attribute includes year, month, day, hour, minute and second and centisecond.  For
        partial outputs the start date time is the end time when the previous output was made."
    ::= { deliverySystemUsageRecordEntry 2 }
```


Copyright International Organization for Standardization
Provided by IHS under license with ISO
No reproduction or networking permitted without license from IHS Not for Resale

bearerServiceCapability OBJECT-TYPE

SYNTAX INTEGER {
speech(1),
audio3dot1KHz(2),
uni64(3),
uni64withT-A(4),
multipleRate(5),
packetModeB-Ch(6),
atm(7) }

MAX-ACCESS read-only

STATUS current

DESCRIPTION

" This attribute contains the bearer capability information for a call or an event concerning a supplementary service."

::= { deliverySystemUsageRecordEntry 3 }

bearerServiceMultiplier OBJECT-TYPE

SYNTAX INTEGER (2..30)

MAX-ACCESS read-only

STATUS current

DESCRIPTION

" This attribute present only if bearer capability is in the case of multiple rate."

::= { deliverySystemUsageRecordEntry 4 }

serviceUser OBJECT-TYPE

SYNTAX INTEGER {
callingParty(1),
calledParty(2),
serviceSubscriber(3),
serviceConsumer(4)}

MAX-ACCESS read-only

STATUS current

DESCRIPTION

" This attribute provides information of the party whose use of resources has been accounted for. The information provided in this element is a pointer to the party number provided elsewhere in the record. In the case where e.g. the usage record is generated on a transit exchange and no calling party number is available, this element will indicate that the service user is unknown."

::= { deliverySystemUsageRecordEntry 5 }

callingPartyNumber OBJECT-TYPE

SYNTAX Number

 © ISO/IEC 1999 - All rights reserved

--`,,```,,,,````-`-`,,`,,`,`,,`---

Copyright International Organization for Standardization
Provided by IHS under license with ISO
No reproduction or networking permitted without license from IHS Not for Resale

MAX-ACCESS read-create

STATUS current

DESCRIPTION

" This attribute contains the telephone number of the calling party. The calling party will, for non UPT calls be identical to the calling party user. For call type calls and when subscribing to either MSN or DDI the information element indicates the screened and verified number for transfer towards the called subscriber. This attribute contains the default number if the exchange is requested to use that number for transfer towards the called subscriber. If the UMR is generated due to an event concerning a supplementary service then this attribute contains the telephone number of the subscriber that caused the event. It should be noted that in the case of an exchange with a diverted call, the subscriber for which the UMR is generated is indicated by the redirecting number."

::= { deliverySystemUsageRecordEntry 6 }

calledPartyNumber OBJECT-TYPE

SYNTAX Number

MAX-ACCESS read-create

STATUS current

DESCRIPTION

" This attribute contains the telephone number of the called subscriber if the UMR is generated due to a call. If the UMR is generated due to activation or invocation of the diversion supplementary service, then attribute contains the telephone number of the diverted - to number. In special cases this attribute may contain the translated number. This would be the case when abbreviated dialling is used. "

::= { deliverySystemUsageRecordEntry 7 }

calledIdentificationNumber OBJECT-TYPE

SYNTAX Number

MAX-ACCESS read-create

STATUS current

DESCRIPTION

" An identification number that identifies the call. All records produced for the same call have the same call identification number. With the call identification number it is possible to link partial outputs, outputs due to supplementary services during the call and to discriminate between simultaneous call establishments. It should be stressed that the call identification value only has local (exchange) significance."

::= { deliverySystemUsageRecordEntry 8 }

immediateNotification OBJECT-TYPE

SYNTAX TruthValue

MAX-ACCESS read-create

STATUS current

DESCRIPTION

" This attribute shall contain an indication that the record requires immediate data transfer to the OS. This standard does not specify if this indication is due to a subscriber action or contained in the user data. "

Copyright International Organization for Standardization
Provided by IHS under license with ISO
No reproduction or networking permitted without license from IHS Not for Resale

::= { deliverySystemUsageRecordEntry 9 }

networkReleaseCauseValue OBJECT-TYPE

SYNTAX INTEGER

MAX-ACCESS read-create

STATUS current

DESCRIPTION

" This attribute indicates the cause value for the termination of the call. Cause values can be used for statistical purposes or for deterministic purposes or for determining whether the subscriber should be charged with call attempt."

::= { deliverySystemUsageRecordEntry 10 }

networkReleaseCauseLocation OBJECT-TYPE

SYNTAX DisplayString

MAX-ACCESS read-create

STATUS current

DESCRIPTION

"This attribute indicates the cause location for the termination of the call. The location value shall indicate the origin of the cause value. Location values can be used for statistical purposes or for determistical purposes or for determining whether the subscriber should be charged with call attempt. "

::= { deliverySystemUsageRecordEntry 11 }

personalUserId OBJECT-TYPE

SYNTAX DisplayString (SIZE(1..18))

MAX-ACCESS read-only

STATUS current

DESCRIPTION

" This element only has relevance when UPT calls are made. It is a network requirement that the provided international personal User Identity is unique and verified by the network."

::= { deliverySystemUsageRecordEntry 12 }

partialGenerationRecordNumber OBJECT-TYPE

SYNTAX Number

MAX-ACCESS read-create

STATUS current

DESCRIPTION

" This attribute is included if the UMR output is partial. This partial record number consecutively numbers the partial records in a specific call."

::= { deliverySystemUsageRecordEntry 13 }

partialGenerationRecordReason OBJECT-TYPE

 © ISO/IEC 1999 - All rights reserved

Copyright International Organization for Standardization
Provided by IHS under license with ISO
No reproduction or networking permitted without license from IHS Not for Resale

SYNTAX INTEGER {
timeLimits(1),
serviceChange(2),
overflow(3),
networkInternalReasons(4),
lastRecord(5)}
MAX-ACCESS read-only
STATUS current
DESCRIPTION
" This attribute is included if the UMR output is partial. This indicates the reason for partial output and if the record is the last record of a sequence of partial records. "
::= { deliverySystemUsageRecordEntry 14 }

deliveryUsageGeneratingDAVICElementId OBJECT-TYPE
SYNTAX DisplayString (SIZE(1..10))
MAX-ACCESS read-only
STATUS current
DESCRIPTION
" This attribute identifies the DAVIC Element that generated the Usage Data."
::= { deliverySystemUsageRecordEntry 15 }

deliveryUsageGeneratingDAVICElementType OBJECT-TYPE
SYNTAX DisplayString (SIZE(1..6))
MAX-ACCESS read-only
STATUS current
DESCRIPTION
" This attribute identifies the element type of the device that generated the Usage Data. e.g. STU type, server type, switch type, etc."
::= { deliverySystemUsageRecordEntry 16 }

correlationKey OBJECT-TYPE
SYNTAX INTEGER
MAX-ACCESS read-only
STATUS current
DESCRIPTION
" This attribute identifies the DAVIC Element that generated the Usage Data."
::= { deliverySystemUsageRecordEntry 17 }

chargingInfoType OBJECT-TYPE
SYNTAX INTEGER{

Copyright International Organization for Standardization
Provided by IHS under license with ISO
No reproduction or networking permitted without license from IHS Not for Resale

recordedCurrency(1),

recordedUnitsList(2),

freeOfCharge(3),

chargeInfoNotAvailable(4)}

MAX-ACCESS read-only

STATUS current

DESCRIPTION

" This attribute contains the Charging Information generated by an NE which is capable of charging. This information can either be passed on to the billing application or in the case where the NE calculates Charging Information for presentation to the user, this information can be used to compare the values generated by the off-line charging application. The attribute contains both a call charge rate as well as the number of call charge units. The Charging Information can be one of the four cases at any instance."

::= { deliverySystemUsageRecordEntry 18}

chargingInfoRecordedCurrency OBJECT-TYPE

SYNTAX DisplayString(SIZE(1..32))

MAX-ACCESS read-only

STATUS current

DESCRIPTION

" This attribute identifies the Charging Information in terms of recorded currency."

::= { deliverySystemUsageRecordEntry 19 }

chargingInfoRecordedNumberOfUnits OBJECT-TYPE

SYNTAX INTEGER(0..16777215)

MAX-ACCESS read-only

STATUS current

DESCRIPTION

" This attribute identifies the Charging Information in terms of recorded units. A recorded unit is a recorded number of unit which is represented by INTEGER(0..16777215)."

::= { deliverySystemUsageRecordEntry 20 }

deliverySystemUsageDuration OBJECT-TYPE

SYNTAX INTEGER

MAX-ACCESS read-create

STATUS current

DESCRIPTION

" This attribute identifies the duration that delivery system usage needs to be recorded. It is represented in centiseconds."

::= { deliverySystemUsageRecordEntry 21 }

networkProviderId OBJECT-TYPE

 © ISO/IEC 1999 - All rights reserved

Copyright International Organization for Standardization
Provided by IHS under license with ISO
No reproduction or networking permitted without license from IHS Not for Resale

SYNTAX DisplayString (SIZE(1..18))

MAX-ACCESS read-only

STATUS current

DESCRIPTION

" This attribute identifies the provider of the delivery system service."

::= { deliverySystemUsageRecordEntry 22 }

deliverySystemUsageRecordStatus OBJECT-TYPE

SYNTAX RowStatus

MAX-ACCESS read-create

STATUS current

DESCRIPTION

"This attribute specifies the current status of the entry."

::= { deliverySystemUsageRecordEntry 23 }

-- atmProfileTable

-- This table includes a profile of capabilities on the particular ATM used. Actually, the information

-- collected in this table should be part of the deliverySystemUsageRecord table but the type of

-- information to be specified is not simple rather complex type. Thus the information is captured in the

-- separate table and resides in the same group, “Delivery System Usage Record Group”.

atmProfileTable OBJECT-TYPE

SYNTAX SEQUENCE OF AtmProfileEntry

MAX-ACCESS not-accessible

STATUS current

DESCRIPTION

" This table is instantiated when the bearerService attribute has a value, “atm”. It includes a profile of capabilities on the particular ATM used. Traffic parameters and QoS specification will be taken from signalling protocol Q.2931. "

::= { deliverySystemUsageRecordGroup 2 }

atmProfileEntry OBJECT-TYPE

SYNTAX AtmProfileEntry

MAX-ACCESS not-accessible

STATUS current

DESCRIPTION

" This represents an entry in the atmProfileTable."

INDEX { atmProfileIndex }

::= { atmProfileTable 1 }

Copyright International Organization for Standardization
Provided by IHS under license with ISO
No reproduction or networking permitted without license from IHS Not for Resale

```
AtmProfileEntry ::=  SEQUENCE {
    atmProfileIndex                 INTEGER,
    upstreamVPCINumber              INTEGER,
    upstreamVCINumber               INTEGER,
-- upstreamTrafficParameters        TrafficParameters,
     upstreamQoS                    QoS,
    downstreamVPCINumber            INTEGER,
    downstreamVCINumber             INTEGER,
-- downstreamTrafficParameters      TrafficParameters,
    downstreamQoS                   QoS,
    atmProfileStatus                RowStatus
}

atmProfileIndex OBJECT-TYPE
    SYNTAX    INTEGER  (1..2147483647)
    MAX-ACCESS        not-accessible
    STATUS    current
    DESCRIPTION
        "This attribute is the index of the atmProfileTable.  It identifies a particular atmProfile when multiple
        atmProfile occurred."
    ::= { atmProfileEntry 1 }

upstreamVPCINumber OBJECT-TYPE
    SYNTAX    INTEGER
    MAX-ACCESS        read-only
    STATUS    current
    DESCRIPTION
        " This attribute identifies VPIC number for the upstream channels."
    ::= { atmProfileEntry 2 }

upstreamVCINumber OBJECT-TYPE
    SYNTAX    INTEGER
    MAX-ACCESS        read-only
    STATUS    current
    DESCRIPTION
        " This attribute identifies the VCI number for upstream channels.  This attribute is optional."
    ::= { atmProfileEntry 3 }

-- upstreamTrafficParameters will be imported from the specification Q.2931 and provided here in the
-- future.  It is a placeholder now for the future extension.  This attribute can be complex object, in
```

 © ISO/IEC 1999 - All rights reserved

Copyright International Organization for Standardization
Provided by IHS under license with ISO
No reproduction or networking permitted without license from IHS
Not for Resale

```
-- which case, multiple objects will replace this attribute.

-- upstreamTrafficParameters OBJECT-TYPE
--  SYNTAX       TrafficParameters
--   MAX-ACCESS        read-create
--   STATUS      current
--   DESCRIPTION
--   " This attribute contains traffic parameters"
--   ::= { atmProfileEntry ? }

upstreamQoS OBJECT-TYPE
     SYNTAX     QoS
     MAX-ACCESS        read-only
     STATUS     current
     DESCRIPTION
     " This attribute contains QoS information. The value of QoS is defined as a textual-convention defined in
       the SNMPv2-TC.  And the definition is given in the textual-convention section below."
     ::= { atmProfileEntry 4 }

downstreamVPCINumber OBJECT-TYPE
     SYNTAX     INTEGER
     MAX-ACCESS        read-only
     STATUS     current
     DESCRIPTION
          " This attribute identifies VPIC number for the downstream channels."
     ::= { atmProfileEntry 5 }

downstreamVCINumber OBJECT-TYPE
     SYNTAX     INTEGER
     MAX-ACCESS        read-only
     STATUS     current
     DESCRIPTION
          " This attribute identifies the VCI number for downstream channels.  This attribute is optional."
     ::= { atmProfileEntry 6 }

-- downstreamTrafficParameters will be imported from the specification Q.2931 and provided here in
-- the future.  It is a placeholder now for the future extension.  This attribute can be complex object, in
-- which case, multiple objects will replace this attribute.

-- downstreamTrafficParameters OBJECT-TYPE
```


Copyright International Organization for Standardization
Provided by IHS under license with ISO
No reproduction or networking permitted without license from IHS Not for Resale

```
-- SYNTAX      TrafficParameters
--   MAX-ACCESS       read-only
--   STATUS     current
--   DESCRIPTION
--   " This attribute contains traffic parameters"
--   ::= { atmProfileEntry ? }

 downstreamQoS OBJECT-TYPE
     SYNTAX     QoS
     MAX-ACCESS       read-only
     STATUS     current
     DESCRIPTION
     " This attribute contains QoS information.  The value of QoS is defined as a textual-convention defined
     in the SNMPv2-TC.  And the definition is given in the textual-convention section below."
     ::= { atmProfileEntry 7 }

atmProfileStatus OBJECT-TYPE
     SYNTAX     RowStatus
     MAX-ACCESS       read-create
     STATUS     current
     DESCRIPTION
          " This attribute identifies the status of the current entry."
     ::= { atmProfileEntry 8 }

-- Usage Collection Control Group
-- This group enables control of the collection of UCDI Usage Data Files for service usage and delivery
-- system usage.  It is to be maintained by the related DAVIC Elements and used by DAVIC System
-- managers to control this collection.  Four tables are defined:  one that defines which Usage Data
-- Records are to be placed into files, one that defines the collection of bulk UDCI Usage Data Files, one
-- that defines the control of collection of blocks of usage records for near-real time notifications, and one
-- that stores actual record block.

-- Usage Selection Table:  This table provides attributes to control the collection of Usage Data Records
-- generated by a DAVIC Element that are to be placed into a particular type of UDCI Usage Data File.

usageSelectionTable OBJECT-TYPE
     SYNTAX SEQUENCE OF UsageSelectionEntry
     MAX-ACCESS not-accessible
     STATUS current
     DESCRIPTION
```

 © ISO/IEC 1999 - All rights reserved

Copyright International Organization for Standardization
Provided by IHS under license with ISO
No reproduction or networking permitted without license from IHS
Not for Resale

"This table identifies types of Usage Data Records that a DAVIC Element is to place into the indicated types of UDCI Usage Data Files. These files are indicated by indexing the usageFileCollectionTable. Each entry in the table indicates that a particular type of Usage Data Record is to be placed into a particular type of UDCI Usage Data File. There could be multiple entries in this table for a given type of Usage Data Record, and there could be multiple entries in this table for a given type of UDCI Usage Data File."

::= { usageCollectionControlGroup 1 }

usageSelectionEntry OBJECT-TYPE

SYNTAX UsageSelectionEntry

MAX-ACCESS not-accessible

STATUS current

DESCRIPTION

" This represents an entry in the usageSelectionTable."

INDEX { usageSelectionIndex }

::= { usageSelectionTable 1 }

UsageSelectionEntry ::= SEQUENCE {

usageSelectionIndex	INTEGER,
usageSelectionSubtree	OBJECT IDENDIFIER,
usageSelectionList	DisplayString,
usageSelectionAction	INTEGER,
usageSelectionFile	INTEGER,
usageSelectionRecordBlock	INTEGER,
usageSelectionEntryStatus	RowStatus

}

usageSelectionIndex OBJECT-TYPE

SYNTAX INTEGER(1..255)

MAX-ACCESS read-only

STATUS current

DESCRIPTION

"This is the index into the table of mappings from Usage Data Record type to UDCI Usage Data File types"

::= { usageSelectionEntry 1 }

usageSelectionSubtree OBJECT-TYPE

SYNTAX OBJECT IDENTIFIER

MAX-ACCESS read-create

STATUS current

DESCRIPTION

--`,,```,,,,````-`-`,,`,,`,`,,`---

Copyright International Organization for Standardization
Provided by IHS under license with ISO
No reproduction or networking permitted without license from IHS Not for Resale

" This attribute identifies a type of Usage Data Record defined in the Record Group of the Usage MIB. The record types are identified by the object identifier path down to the usageRecord position in the object identifier tree. "

::= { usageSelectionEntry 2 }

usageSelectionList OBJECT-TYPE

SYNTAX DisplayString(SIZE(0..8))

MAX-ACCESS read-create

STATUS current

DESCRIPTION

"This attribute identifies the set of Data Elements in the Usage Data Record type identified in the usageSelectionSubtree that are to be placed into the Usage Data Record. The presence of a data element in the list indicates that the data element is to be provided in the Usage Data Record; the absence of a data element in the list indicates that the data element is not to be provide in the Usage Data Record. Each data element is represented by the number of its position in the Usage Data Record, as defined in the Record Group of the Usage MIB. Hence, the first managed object in the definition of a record type is assigned the number 1, the second managed object is assigned the number 2, etc.

The list is specified as an OCTET STRING. Each data element is represented by a single bit, with Data Elements 1 through 8 being represented by the bits in the first octet, data element 9 throught 16 is represented by the bits in the second octet, etc. In each octet, the lowest numbered data element is represented by the most significant bit, and the highest-numbered data element is represented by the least-significant bit. The presence of a data element is indicated by a bit value of 1, and the absence of a data element is indicated by a bit value of 0. The DAVIC Element shall ignore the request for optional Data Elements that are not supported by the DAVIC Element."

::= { usageSelectionEntry 3 }

usageSelectionAction OBJECT-TYPE

SYNTAX INTEGER {

initiateTrap(1),

writeToBlockRecord(2),

writeToFile(3)}

MAX-ACCESS read-create

STATUS current

DESCRIPTION

" This attribute indicates whether trap needs to be issued to the DAVIC System Manager for the real-time usage reporting or to write it to file(s)."

::= { usageSelectionEntry 4 }

usageSelectionFile OBJECT-TYPE

SYNTAX INTEGER(1..255)

MAX-ACCESS read-create

STATUS current

DESCRIPTION

 © ISO/IEC 1999 - All rights reserved

Copyright International Organization for Standardization
Provided by IHS under license with ISO
No reproduction or networking permitted without license from IHS Not for Resale

" This attribute identifies the type of file into which the identified type of Usage Data Record is to be placed. This references the usageFileCollectionIndex attribute in the usageFileCollectionTable. If there is no conceptual row in the table for which the value of usageFileCollectionIndex has the same value as this attribute, this entry is ignored."

::= { usageSelectionEntry 5 }

usageSelectionRecordBlock OBJECT-TYPE

SYNTAX INTEGER(1..255)

MAX-ACCESS read-create

STATUS current

DESCRIPTION

" This attribute identifies the type of record block into which the identified type of Usage Data Record is to be placed. This references the usageBlockedRecordIndex attribute in the usageBlockedRecordTable. If there is no conceptual row in the table for which the value of usageBlockedRecordIndex has the same value as this attribute, this entry is ignored."

::= { usageSelectionEntry 6 }

usageSelectionEntryStatus OBJECT-TYPE

SYNTAX RowStatus

MAX-ACCESS read-create

STATUS current

DESCRIPTION

" This attribute identifies the status of this entry."

::= { usageSelectionEntry 7 }

-- **Usage File Collection Table**: This table provides attributes for the collection of types of UDCI

-- Usage Data Files.

usageFileCollectionTable OBJECT-TYPE

SYNTAX SEQUENCE OF UsageFileCollectionEntry

MAX-ACCESS not-accessible

STATUS current

DESCRIPTION

"This table identifies types of UDCI Usage Data Files that a DAVIC Element generates. Each entry in the table indicates the attributes of the collection of the file. The usageSelectionTable indicates what types of Usage Data Records are placed into these files."

::= {usageCollectionControlGroup 2 }

usageFileCollectionEntry OBJECT-TYPE

SYNTAX UsageFileCollectionEntry

MAX-ACCESS not-accessible

STATUS current

Copyright International Organization for Standardization
Provided by IHS under license with ISO
No reproduction or networking permitted without license from IHS Not for Resale

```
    DESCRIPTION
        " This represents an entry in the usageSelectionTable."
    INDEX { usageFileCollectionIndex }
    ::= { usageFileCollectionTable 1 }

UsageFileCollectionEntry ::=  SEQUENCE {
    usageFileCollectionIndex            INTEGER,
    usageFileDestinationId              DisplayString,
    usageFileDestinationAddress         IpAddress,
    maxSize                             INTEGER,
    mode                                INTEGER,
    sizeType                            INTEGER,
    sizeAmount                          INTEGER,
    interval                            INTEGER,
    currentSeqNumber                    INTEGER,
    usageFileCollectionStatus           RowStatus
}

usageFileCollectionIndex OBJECT-TYPE
    SYNTAX    INTEGER  (1..2147483647)
    MAX-ACCESS      read-only
    STATUS    current
    DESCRIPTION
        "This is the index of the usageFileCollectionTable."
    ::= { usageFileCollectionEntry 1 }

usageFileDestinationId OBJECT-TYPE
    SYNTAX    DisplayString(SIZE(1..10))
    MAX-ACCESS      read-create
    STATUS    current
    DESCRIPTION
        " This attribute identifies the DAVIC System Manager that will receive the files."
    ::= { usageFileCollectionEntry 2 }

usageFileDestinationAddress OBJECT-TYPE
    SYNTAX    IpAddress
    MAX-ACCESS      read-create
    STATUS    current
    DESCRIPTION
```

 © ISO/IEC 1999 - All rights reserved

--`,,```,,,,````-`-`,,`,,`,`,,`---
Copyright International Organization for Standardization
Provided by IHS under license with ISO
No reproduction or networking permitted without license from IHS
Not for Resale

"This attribute identifies IP address of the DAVIC System Manager that will receive the files."

::= { usageFileCollectionEntry 3 }

maxSize OBJECT-TYPE

SYNTAX INTEGER(1..2147483647)

MAX-ACCESS read-create

STATUS current

DESCRIPTION

" This attribute identifies the maximum size of a file in bytes. When the file reaches this size, the DAVIC Element shall close the file and begin placing newly generated Usage Data Records into a new file."

::= { usageFileCollectionEntry 4 }

mode OBJECT-TYPE

SYNTAX INTEGER {

uponGenerationOfRecord(1),

uponReceivingRequest(2),

uponReachingFixedSizeOrReceivingRequest(3),

uponPeriodEndingOrReceivingRequest(4),

uponReachingFixedSizeOrPeriodEndingOrReceivingRequest(5)}

MAX-ACCESS read-create

STATUS current

DESCRIPTION

" This attribute provides the mechanism for initiating a file transfer for the file type. A value of 1 would be used for real-time delivery of Usage DataRecords (e.g. to support interactive billing)."

::= { usageFileCollectionEntry 5 }

sizeType OBJECT-TYPE

SYNTAX INTEGER {

numberOfRecords(0),

byteSizeOfFile(1)}

MAX-ACCESS read-create

STATUS current

DESCRIPTION

" This attribute is an indicator of the type of information represented by the sizeAmount attribute. It is relevant if the value of the fileCollectionMode equals 3 or 5."

::= { usageFileCollectionEntry 6 }

sizeAmount OBJECT-TYPE

SYNTAX INTEGER(1..2147483657)

MAX-ACCESS read-create

Copyright International Organization for Standardization
Provided by IHS under license with ISO
No reproduction or networking permitted without license from IHS Not for Resale

STATUS current

DESCRIPTION

"This attribute identifies the size of a file of this file type at which the DAVIC Element is to initiate the transfer of the file. It is relevant if the value of the mode attribute is set to 3 or 5. The value of this attribute represents the number of Usage Data Records if the value of the sizeType attribute is set to 0, and represents the byte size of the file if the value is set to 1."

::= { usageFileCollectionEntry 7 }

interval OBJECT-TYPE

SYNTAX INTEGER(1..86400)

MAX-ACCESS read-create

STATUS current

DESCRIPTION

" This attribute provides the time length, in seconds, between consecutive transfers of files of this file type. It is relevant if the value of the mode attribute is set to 4 or 5."

::= { usageFileCollectionEntry 8 }

currentSeqNumber OBJECT-TYPE

SYNTAX INTEGER(1..999999)

MAX-ACCESS read-only

STATUS current

DESCRIPTION

" This attribute identifies the sequence number of the last file to be successfully transferred to the particular DAVIC System Manager for this file type."

::= { usageFileCollectionEntry 9 }

usageFileCollectionStatus OBJECT-TYPE

SYNTAX RowStatus

MAX-ACCESS read-create

STATUS current

DESCRIPTION

" This attribute specifies the current status of the entry."

::= { usageFileCollectionEntry 10 }

-- **Usage Blocked Record Collection Control Table**: This table provides attributes for the control of

-- collecting usage records that is selected by a DAVIC System Manager based on usageSelectionTable

-- into block of records. Notifications are emitted when the following conditions occur:

-- the number of records in the buffer becomes equal to the maximum block size

-- the time interval elapsed since the first record currently contained in the buffer exceeds the value

-- maxTimeInterval attribute

 © ISO/IEC 1999 - All rights reserved

--`,,```,,,,````-`-`,,`,,`,`,,`---

Copyright International Organization for Standardization
Provided by IHS under license with ISO
No reproduction or networking permitted without license from IHS Not for Resale

```
usageBlockedRecordCollectionControlTable OBJECT-TYPE
    SYNTAX SEQUENCE OF UsageBlockedRecordCollectionControlEntry
    MAX-ACCESS not-accessible
    STATUS current
    DESCRIPTION
        "This table controls to collect usage records of manger's choice into a block for near-real-time
        processing."
    ::= {usageCollectionControlGroup 3 }

usageBlockedRecordCollectionControlEntry OBJECT-TYPE
    SYNTAX UsageBlockedRecordCollectionControlEntry
    MAX-ACCESS not-accessible
    STATUS current
    DESCRIPTION
        " This represents an entry in the usageBlockedRecordCollectionControlTable."
    INDEX { usageBlockedRecordCollectionControlIndex }
    ::= { usageBlockedRecordCollectionControlTable 1 }

UsageBlockedRecordCollectionControlEntry ::=  SEQUENCE {
    usageBlockedRecordCollectionControlIndex      INTEGER,
    usageBlockDestinationId                       DisplayString,
    usageBlockDstinationAddress                   IpAddress,
    blockedRecordControlAction                    INTEGER,
    maxBlockSize                                  INTEGER,
    maxTimeInterval                               INTEGER,
    usageBlockedRecordCollectionControlStatus     RowStatus
}

usageBlockedRecordCollectionControlIndex OBJECT-TYPE
    SYNTAX    INTEGER  (1..2147483647)
    MAX-ACCESS        read-only
    STATUS    current
    DESCRIPTION
        "This is the index of the usageRecordCollectionControlTable."
    ::= { usageBlockedRecordCollectionControlEntry 1 }

usageBlockDestinationId OBJECT-TYPE
    SYNTAX    DisplayString(SIZE(1..10))
    MAX-ACCESS        read-create
    STATUS    current
```


Copyright International Organization for Standardization
Provided by IHS under license with ISO
No reproduction or networking permitted without license from IHS Not for Resale

DESCRIPTION

" This attribute identifies the DAVIC System Manager that will receive the block. "

::= { usageBlockedRecordCollectionControlEntry 2 }

usageBlockDestinationAddress OBJECT-TYPE

SYNTAX IpAddress

MAX-ACCESS read-create

STATUS current

DESCRIPTION

"This attribute identifies IP address of the DAVIC System Manager that will receive the block."

::= { usageBlockedRecordCollectionControlEntry 3 }

blockedRecordControlAction OBJECT-TYPE

SYNTAX INTEGER{

initiateTrapUponMaxBlockSizeExceed(1),

initiateTrapUponMaxTimeIntervalExceed(2)}

MAX-ACCESS read-create

STATUS current

DESCRIPTION

"This attribute indicates a control action."

::= { usageBlockedRecordCollectionControlEntry 4 }

maxBlockSize OBJECT-TYPE

SYNTAX INTEGER

MAX-ACCESS read-create

STATUS current

DESCRIPTION

" This attribute identifies the maximum size of a block in bytes. When the record reaches this size, the DAVIC Element shall send a trap to the specified DAVIC System Manager."

::= { usageBlockedRecordCollectionControlEntry 5 }

maxTimeInterval OBJECT-TYPE

SYNTAX INTEGER

MAX-ACCESS read-create

STATUS current

DESCRIPTION

" This attribute identifies the maximum time interval, measured in seconds, allowed for storing records."

::= { usageBlockedRecordCollectionControlEntry 6 }

 © ISO/IEC 1999 - All rights reserved

Copyright International Organization for Standardization
Provided by IHS under license with ISO
No reproduction or networking permitted without license from IHS Not for Resale

```
usageBlockedRecordCollectionControlStatus OBJECT-TYPE
    SYNTAX     RowStatus
    MAX-ACCESS         read-create
    STATUS     current
    DESCRIPTION
        " This attribute specifies the current status of the entry."
    ::= { usageBlockedRecordCollectionControlEntry 7 }

-- Usage Blocked Record Table: This table provides attributes for collecting usage records that is selected
-- by a DAVIC System Manager based on usageSelectionTable into block of records.  Each row stores
-- an usage record.

usageBlockedRecordTable OBJECT-TYPE
    SYNTAX SEQUENCE OF UsageBlockedRecordEntry
    MAX-ACCESS not-accessible
    STATUS current
    DESCRIPTION
        " This table provides attributes for collecting usage records that is selected by a DAVIC System
        Manager based on usageSelectionTable into block of records.  Each row stores an usage record."
    ::= {usageCollectionControlGroup 4 }

usageBlockedRecordEntry OBJECT-TYPE
    SYNTAX UsageBlockedRecordEntry
    MAX-ACCESS not-accessible
    STATUS current
    DESCRIPTION
        " This represents an entry in the usageBlockedRecordTable."
    INDEX { usageBlockedRecordIndex }
    ::= { usageBlockedRecordTable 1 }

usageBlockedRecordEntry ::=  SEQUENCE {
    usageBlockedRecordCollectionControlIndex     INTEGER,
    usageBlockedRecordIndex                      INTEGER,
    blockedRecordData                            DisplayString,
    blockedRecordLength                          INTEGER,
    blockedRecordTime                            DateAndTime,
    usageBlockedRecordStatus                     RowStatus
}

usageBlockedRecordCollectionControlIndex OBJECT-TYPE
```


Copyright International Organization for Standardization
Provided by IHS under license with ISO
No reproduction or networking permitted without license from IHS Not for Resale

SYNTAX INTEGER (1..2147483647)

MAX-ACCESS read-only

STATUS current

DESCRIPTION

"This is the index of the usageBlockedRecordCollectionControlTable with which this block of record is associated."

::= { usageBlockedRecordEntry 1 }

usageBlockedRecordIndex OBJECT-TYPE

SYNTAX INTEGER (1..2147483647)

MAX-ACCESS read-only

STATUS current

DESCRIPTION

"This is the index of the usageBlockedRecordTable."

::= { usageBlockedRecordEntry 2 }

blockedRecordData OBJECT-TYPE

SYNTAX DisplayString(SIZE(1..32))

MAX-ACCESS read-only

STATUS current

DESCRIPTION

" This attribute identifies actual usage record stored for this row."

::= { usageBlockedRecordEntry 3 }

blockedRecordLength OBJECT-TYPE

SYNTAX INTEGER

MAX-ACCESS read-only

STATUS current

DESCRIPTION

"This attribute identifies the length of the stored usage record for this row."

::= { usageBlockedRecordEntry 4 }

blockedRecordTime OBJECT-TYPE

SYNTAX DateAndTime

MAX-ACCESS read-only

STATUS current

DESCRIPTION

"This attribute identifies the time that this usage record is stored as a block."

::= { usageBlockedRecordEntry 5 }

 © ISO/IEC 1999 - All rights reserved

Copyright International Organization for Standardization
Provided by IHS under license with ISO
No reproduction or networking permitted without license from IHS Not for Resale

```
usageBlockedRecordStatus OBJECT-TYPE
    SYNTAX    RowStatus
    MAX-ACCESS        read-create
    STATUS    current
    DESCRIPTION
        " This attribute specifies the current status of the entry."
    ::= { usageBlockedRecordEntry 6 }

-- Usage Record Notifications Group
-- Four notifications are defined below.  They are for supporting real-time delivery of service and delivery
-- system usage record to a DAVIC System Manager.  A notification is triggered when
-- the usageSelectionAction attribute in usageSelectionTable is set to initiateTrap(1).

serviceUsageRecordCreationNotify NOTIFICATION-TYPE
        OBJECTS {serviceUsageRecordIndex}
        STATUS    current
        DESCRIPTION
          “This notification(trap) is emitted whenever an instance of serviceUsageRecordTable is created. ”
        ::= { usageRecordNotificationGroup 1 }

deliverySystemUsageRecordCreationNotify NOTIFICATION-TYPE
        OBJECTS {deliverySystemUsageRecordIndex}
        STATUS    current
        DESCRIPTION
          “This notification(trap) is emitted whenever an instance of deliverySystemUsageRecordTable is
          created. ”
        ::= { usageRecordNotificationGroup 2 }

usageRecordBlockMaxSizeExceedNotify NOTIFICATION-TYPE
        OBJECTS {usageBlockedRecordIndex}
        STATUS    current
        DESCRIPTION
          “This notification(trap) is emitted when the number of records exceeds the maximum block size
          and blockedRecordControlAction attribute value is set to initiate
          TrapUponMaxBlockSizeExceed(1). ”
        ::= { usageRecordNotificationGroup 3 }

usageRecordBlockMaxIntervalTimeExceedNotify NOTIFICATION-TYPE
        OBJECTS {usageBlockedRecordIndex}
        STATUS    current
```


Copyright International Organization for Standardization
Provided by IHS under license with ISO
No reproduction or networking permitted without license from IHS Not for Resale

DESCRIPTION

"This notification(trap) is emitted when the time interval exceeds the maximum time interval and blockedRecordControlAction attribute value is set to initiateTrapUponMaxTimeIntervalExceed(2). "

::= { usageRecordNotificationGroup 4 }

-- Textual Conventions

Number ::= TEXTUAL-CONVENTION

STATUS current

DESCRIPTION

"This convention is used to represent a number for addressing purposes. It is composed of
a) one octet for odd/even indicator and nature of address indicator
b) one octet for numbering plan indicator
c) digits of the address encoded as TBCD String

1)
bits 8: Odd/even indicator
0: even number of address signals
1: odd number of address signals

bits 7654321: Nature of address indicator

0000000		spare
0000001		subscriber number
0000010		unknown
0000011		national (significant) number
0000100		international number
0000101 to 1101111		spare
1110000 to 1111110		reserved for national use
1111111		spare

2)
bits 765: numbering plan indicator

000	spare
001	ISDN(Telephony) Number Plan (Rec CCITT E.164)
010	spare
011	data numbering plan (CCITT Rec. X.121)
100	telex numbering plan (CCITT Rec. F.69)
101	reserved for national use
110	reserved for national use
111	spare

3) The following octets representing digits of an address encoded as a TBCD-STRING.

TBCD-STRING ::= OCTET STRING

This type (Telephony Binary Coded Decimal String) is used to represent digits from 0 through 9, *, #, a, b, c, two digits per octet, each digit encoded 0000 to 1001 (0 to 9), 1010 (*), 1011(#), 1100 (a), 1101 (b) or 1110 (c); 1111 (end of pulsing signal-ST); 0000 is used as a filler when there is an odd number of digits. The most significant address signal is sent first. Subsequent address signals are sent in successive 4-bit fields."

SYNTAX OCTET STRING(SIZE(1..14))

 © ISO/IEC 1999 - All rights reserved

Copyright International Organization for Standardization
Provided by IHS under license with ISO
No reproduction or networking permitted without license from IHS Not for Resale

```
-- This textual-convention is imported from Draft ATM-RMON MIB authored by Andy Bierman and
-- Keith McCloghrie

QoS  ::=   TEXTUAL-CONVENTION
        STATUS current
        DESCRIPTION
            "This TC describes an object that identifies the cell
            delivery quality-of-service classification, associated with
            a particular vcSelectGroup collection."
        SYNTAX INTEGER  {
                unknownQos(1),  -- includes 'other';
                cbrQos(2),      -- constant bit rate
                rtVbrQos(3),    -- variable bit rate (real-time)
                nrtVbrQos(4),   -- variable bit-rate (non-real-time)
                abrQos(5),      -- available bit rate
                ubrQos(6)       -- unspecified bit rate
            }

END     -- DAVIC-USAGE-MIB
```

9.2.2 CMIP Managed object classes

9.2.2.1 Service Usage Record

This managed object class is a subclass of the “eventLogRecord” class described in X.735 and defined in CCITT X.721 and therefore inherits all of the properties of both the “logRecord” and eventLogRecord” classes.

```
ServiceUsageRecord  MANAGED OBJECT CLASS
DERIVED FROM “Rec. X.721 I ISO/IEC 10165-2 : 1992”: eventRecord;
CHARACTERIZED BY
serviceUsageRecordPackage PACKAGE
            BEHAVIOUR serviceUsageRecordBehaviour  BEHAVIOUR
            DEFINED AS
            "This object class defines the notifications for the usage records.";
            ATTRIBUTES
            recordType                                  GET,
            serviceSubscriberId                         GET,
            sTUId                                       GET,
            sTUType                                     GET,
            sTUVersion                                  GET,
```


Copyright International Organization for Standardization
Provided by IHS under license with ISO
No reproduction or networking permitted without license from IHS Not for Resale

serviceProviderId GET,
applicationType GET,
contentId GET,
usageEventInformationList GET,
serviceReleaseCauseIndication GET,
dataGeneratingElementId GET,
dataGeneratingElementType GET,
dataValidity GET;;;
CONDITIONAL PACKAGES
serviceConsumerIdentificationPackage
PRESENT IF "this parameter was present in the received notification",
quotedPricePackage
PRESENT IF "this parameter was present in the received notification",
dataGeneratingElementCorrelationKeyPackage
PRESENT IF "this parameter was present in the received notification",
serverIdPackage
PRESENT IF "this parameter was present in the received notification",
dataPriorityPackage
PRESENT IF "this parameter was present in the received notification";
REGISTERED AS {ducObjectClass 1};

9.2.2.2 Delivery System Usage Record

deliverySystemUsageRecord MANAGED OBJECT CLASS
DERIVED FROM “Rec. X.721 I ISO/IEC 10165-2 : 1992”: eventRecord;
CHARACTERIZED BY
deliverySystemUsageRecordPackage PACKAGE
BEHAVIOUR deliverySystemUsageRecord Behaviour BEHAVIOUR
DEFINED AS
"This object class defines the notifications for the usage records. ";
ATTRIBUTES
recordType GET,
startTimeStamp GET,
bearerService GET,
serviceUser GET;;;
CONDITIONAL PACKAGES
callingPartyNumberPackage
PRESENT IF "this parameter was present in the received notification",
calledPartyNumberPackage
PRESENT IF "this parameter was present in the received notification",
callIdentificationNumberPackage

 © ISO/IEC 1999 - All rights reserved

Copyright International Organization for Standardization
Provided by IHS under license with ISO
No reproduction or networking permitted without license from IHS Not for Resale

PRESENT IF "this parameter was present in the received notification",
immediateNotificationPackage
PRESENT IF "this parameter was present in the received notification",
networkReleaseCausePackage
PRESENT IF "this parameter was present in the received notification",
personalUserIdPackage
PRESENT IF "this parameter was present in the received notification",
partialGenerationPackage
PRESENT IF "this parameter was present in the received notification",
usageGeneratingDAVICElementPackage
PRESENT IF "this parameter was present in the received notification",
correlationKeyPackage
PRESENT IF "this parameter was present in the received notification",
chargingInformationPackage
PRESENT IF "this parameter was present in the received notification",
deliverySystemUsageDurationPackage
PRESENT IF "this parameter was present in the received notification",
standardExtensionsPackage
PRESENT IF "this parameter was present in the received notification",
recordExtensionsPackage
PRESENT IF "this parameter was present in the received notification",
networkProviderIdPackage
PRESENT IF "this parameter was present in the received notification";
REGISTERED AS { ducObjectClass 2};

9.2.2.3 File generating Log

This managed object class is a subclass of the “Log” class described in X.735 and defined in CCITT X.721 and therefore inherits all of the properties of the “log” class.

fileGeneratingLog MANAGED OBJECT CLASS
DERIVED FROM “Rec. X.721 I ISO/IEC 10165-2 : 1992”: log;
CHARACTERIZED BY
fileGeneratingLogPkg PACKAGE
BEHAVIOUR
fileGeneratingLogBhv BEHAVIOUR
DEFINED AS "This log is used to create files that can be exchanged using an appropriate file transfer protocol. The action create file is used to generate the file to be exchanged. The file created consists of a concatenation of the content of the usage metering records; i.e. the usage metering records without the record overhead (Record Id, Managed Object Class and Instance and Logging Time). To avoid duplication of UMRs, logging of blockedRecord notifications emitted by the block generating log should be excluded by configuration of the fileGeneratingLog’s discriminator

Copyright International Organization for Standardization
Provided by IHS under license with ISO
No reproduction or networking permitted without license from IHS Not for Resale

construct. Files may also be created due to internal trigger events. One such internal trigger is based on time of day. When files are created due to such internal triggers the corresponding records in the log will be deleted automatically if the automaticRecordDeletion attribute is set to true.";

ATTRIBUTES

automaticRecordDeletion GET-REPLACE DEFAULT VALUE true;

ACTIONS

createFile;;;

CONDITIONAL PACKAGES

dailyTriggeringPackage

PRESENT IF "if the file creation is to be triggered on a daily basis",

fileCreationNotificationPackage

PRESENT IF "if the file creation is triggered using the daily scheduling mechanism triggering method or an internal mechanism.";

REGISTERED AS { ducObjectClass 3};

9.2.2.4 Block Generating Log

This managed object class is a subclass of the “Log” class described in X.735 and defined in CCITT X.721 and therefore inherits all of the properties of the “log” class.

blockGeneratingLog MANAGED OBJECT CLASS
DERIVED FROM "Rec. X.721 I ISO/IEC 10165-2 : 1992":log;
CHARACTERIZED BY
blockGeneratingLogPkg PACKAGE
BEHAVIOUR
blockGeneratingLogBhv BEHAVIOUR

DEFINED AS "This log is considered to be infinite and therefore it does not have to instantiate the finite-log size package from its superclass log. The blockGenerating-log stores all records that satisfy its discriminator construct. An instance of this log emits the blocked record notification when any of the following events occurs:
- the number of records in the log becomes equal to the maximum block size,
- the time interval elapsed since the first record currently contained in the log exceeds the value maxTimeInterval attribute,
- an internal system limitation has been exceeded, including the block generating log itself overflowing.
Upon emitting the blocked record notification all records stored in the block generating log are deleted and the log is ready to store new event records. Because of the self-emptying nature of this log, any of the inherited log-full action may be selected and the behaviour of the log will not change.";;
ATTRIBUTES
maxBlockSize GET-REPLACE,
maxTimeInterval GET-REPLACE;

NOTIFICATIONS
blockedRecordNotification;;;

 © ISO/IEC 1999 - All rights reserved

Copyright International Organization for Standardization
Provided by IHS under license with ISO
No reproduction or networking permitted without license from IHS Not for Resale

REGISTERED AS { ducObjectClass 4};

9.2.2.5 Simple Usage metering Control

simpleUsageMeteringControl MANAGED OBJECT CLASS

DERIVED FROM “Rec. X.742 I ISO/IEC 10164-10 : 1995”: usageMeteringControl;

CHARACTERIZED BY

simpleUsageMeteringControlPackage PACKAGE

BEHAVIOUR usageMeteringControlBehaviour BEHAVIOUR

DEFINED AS
"This object class controls the generation of UMRs in the NE.”;
ATTRIBUTES
creationTriggerList GET-REPLACE ADD-REMOVE;;;
REGISTERED AS { ducObjectClass 5};

9.2.2.6 Usage Metering Data

This managed object class emits the UMR notification for telecommunication events selected by the usage metering control object. This class contains notifications that permit the NE to transmit usage metering records to the OS.

A UMR notification is sent out if one of the following events occurs

- change or termination of the service;
- expiration of the periodic timer (defined in the usage metering control object);
- NE internal reasons e.g. reaching a volume threshold (this may also be manufacture specific).

usageMeteringData MANAGED OBJECT CLASS

DERIVED FROM “Rec. X.721 I ISO/IEC 10165-2 : 1992”: top;

CHARACTERIZED BY

usageMeteringDataPackage PACKAGE

BEHAVIOUR

usageMeteringDataBehaviour BEHAVIOUR

DEFINED AS

"This object class defines the notifications for the usage records. ";

ATTRIBUTES

usageMeteringDatalId GET,

accountableObjectReference GET;

NOTIFICATIONS

deliverySystemUsageRecordNotification,

serviceUsageRecordNotification;;;

REGISTERED AS { ducObjectClass 6};

Copyright International Organization for Standardization
Provided by IHS under license with ISO
No reproduction or networking permitted without license from IHS Not for Resale

9.2.3 Packages

9.2.3.1 Service Consumer Identification Package

```
serviceConsumerIdentificationPackage    PACKAGE
        ATTRIBUTES
        serviceConsumerId                   GET;
REGISTERED AS {ducPackage  1};
```

9.2.3.2 Quoted price Package

```
quotedPricePackage                  PACKAGE
        ATTRIBUTES
        quotedPrice                             GET;
REGISTERED AS { ducPackage 2};
```

9.2.3.3 Data Generating Element Correlation Key Package

```
dataGeneratingElementCorrelationKey     PACKAGE
        ATTRIBUTES
        dataGeneratingElementCorrelationKey     GET;
REGISTERED AS { ducPackage 3};
```

9.2.3.4 Server Identification Package

```
serverIdPackage                     PACKAGE
        ATTRIBUTES
        serverId                                GET;
REGISTERED AS { ducPackage 4};
```

9.2.3.5 Data Priority Package

```
dataPriorityPackage                         PACKAGE
        ATTRIBUTES
        dataPriority                            GET;
REGISTERED AS { ducPackage 5};
```

9.2.3.6 Calling Party Number Package

```
callingPartyNumberPackage       PACKAGE
        ATTRIBUTES
        callingPartyNumber              GET;
REGISTERED AS { ducPackage 6};
```

9.2.3.7 Called Party Number Package

```
calledPartyNumberPackage        PACKAGE
        ATTRIBUTES
        calledPartyNumber               GET;
```

 © ISO/IEC 1999 - All rights reserved

Copyright International Organization for Standardization
Provided by IHS under license with ISO
No reproduction or networking permitted without license from IHS Not for Resale

REGISTERED AS { ducPackage 7};

9.2.3.8 Call identification Number Package

```
callIdentificationNumberPackage    PACKAGE
        ATTRIBUTES
        callIdentificationNumber                GET;
REGISTERED AS { ducPackage 8};
```

9.2.3.9 ImmediateNotification Package

```
immediateNotificationPackage       PACKAGE
        ATTRIBUTES
        immediateNotification           GET;
REGISTERED AS { ducPackage 9};
```

9.2.3.10 Network Release Cause Package

```
networkReleaseCausePackage         PACKAGE
        ATTRIBUTES
        networkReleaseCause             GET;
REGISTERED AS { ducPackage 10};
```

9.2.3.11 Personal User Id Package

```
personalUserIdPackage              PACKAGE
        ATTRIBUTES
        personalUserId          GET;
REGISTERED AS { ducPackage 11};
```

9.2.3.12 Partial Generation Package

```
partialGenerationPackage  PACKAGE
        ATTRIBUTES
        partialGeneration               GET;
REGISTERED AS { ducPackage 12};
```

9.2.3.13 Usage Generating DAVIC Element Package

```
usageGeneratingDAVICElementPackage     PACKAGE
        ATTRIBUTES
        usageGeneratingDAVICElement             GET;
REGISTERED AS { ducPackage 13};
```

9.2.3.14 Correlation Key Package

```
correlationKeyPackage      PACKAGE
        ATTRIBUTES
        correlationKey                  GET;
REGISTERED AS { ducPackage  14};
```

© ISO/IEC 1999 - All rights reserved

Copyright International Organization for Standardization
Provided by IHS under license with ISO
No reproduction or networking permitted without license from IHS
Not for Resale

9.2.3.15 Charging Information Package

```
chargingInformationPackage      PACKAGE
        ATTRIBUTES
                                GET;
REGISTERED AS { ducPackage 15};
```

9.2.3.16 Delivery System Usage Duration Package

```
deliverySystemUsageDurationPackage      PACKAGE
        ATTRIBUTES
        deliverySystemUsageDuration     GET;
REGISTERED AS { ducPackage 16};
```

9.2.3.17 Standard Extensions Package

```
standardExtensionsPackage       PACKAGE
        ATTRIBUTES
        standardExtensions              GET;
REGISTERED AS { ducPackage 17};
```

9.2.3.18 Record Extensions Package

```
recordExtensionsPackage  PACKAGE
        ATTRIBUTES
        recordExtensions        GET;
REGISTERED AS { ducPackage 18};
```

9.2.3.19 Network Provider Identification Package

```
networkProviderIdPackage        PACKAGE
        ATTRIBUTES
        networkProviderId               GET;
REGISTERED AS { ducPackage 19};
```

9.2.3.20 File Creation Notification Package

```
fileCreationNotificationPackage     PACKAGE
        NOTIFICATIONS
        fileCreationNotification;
REGISTERED AS { ducPackage 20};
```

9.2.3.21 Daily Triggering Package

```
dailyTriggeringPackage    PACKAGE
        ATTRIBUTES
        timesOfDay              GET-REPLACE  ADD-REMOVE;
REGISTERED AS { ducPackage 21};
```

 © ISO/IEC 1999 - All rights reserved

Copyright International Organization for Standardization
Provided by IHS under license with ISO
No reproduction or networking permitted without license from IHS
Not for Resale

9.2.4 Attributes

9.2.4.1 Usage Metering Data Identifier

usageMeteringDataId ATTRIBUTE

WITH ATTRIBUTE SYNTAX

DavicUsageCMIPModuleV0.UsageMeteringDataId;

MATCHES FOR EQUALITY;

BEHAVIOUR

usageMeteringDataIdBehaviour BEHAVIOUR

DEFINED AS “This attribute uniquely identifies the usageMeteringData function.”;

REGISTERED AS {ducAttribute 1};

9.2.4.2 Automatic Record Deletion

automaticRecordDeletion ATTRIBUTE

WITH ATTRIBUTE SYNTAX BOOLEAN;

MATCHES FOR EQUALITY;

BEHAVIOUR

automaticRecordDeletionsBehaviour BEHAVIOUR

DEFINED AS “This attribute specifies whether the records in the log that were copied to the created file are to be deleted automatically. This attribute applies only when the file is created due to an internal file creation trigger. For files created in response to an OS action the parameter in the action overrides.”;

REGISTERED AS { ducAttribute 2};

9.2.4.3 Max Block Size

maxBlockSize ATTRIBUTE

WITH ATTRIBUTE SYNTAX DavicUsageCMIPModuleV0.MaxBlockSize;

MATCHES FOR EQUALITY, ORDERING;

BEHAVIOUR

maxBlockSizeBehaviour BEHAVIOUR

DEFINED AS “The value of this attribute specifies the maximum number of UMRs that may be contained in the blockedRecordNotification emitted by the blockGeneratingLog”;

REGISTERED AS { ducAttribute 3};

9.2.4.4 Max Time interval

maxTimeInterval ATTRIBUTE

WITH ATTRIBUTE SYNTAX DavicUsageCMIPModuleV0.MaxTimeInterval;

MATCHES FOR EQUALITY, ORDERING;

BEHAVIOUR

Copyright International Organization for Standardization
Provided by IHS under license with ISO
No reproduction or networking permitted without license from IHS Not for Resale

maxTimeIntervalBehaviour BEHAVIOUR

DEFINED AS “The value of this attribute specifies the maximum time interval that may elapse from receipt of the first record currently in the log to the time at which a blockedRecordNotification must be emitted. This value, therefore, specifies the maximum latency with which near-real-time UMR data will be transmitted to the upstream system.”;;

REGISTERED AS { ducAttribute 4};

9.2.4.5 Creation Trigger List

creationTriggerList ATTRIBUTE
WITH ATTRIBUTE SYNTAX DavicUsageCMIPModuleV0.CreationTriggerList;
MATCHES FOR EQUALITY NON-NULL INTERSECTION;
BEHAVIOUR
creationTriggerListBhv BEHAVIOUR
DEFINED AS " This attribute consists of a list of values that specify the condition that caus creation of a Usage Metering Data object.";
REGISTERED AS { ducAttribute 5};

9.2.4.6 Record Type

recordType ATTRIBUTE

WITH ATTRIBUTE SYNTAX DavicUsageCMIPModuleV0.RecordType;

MATCHES FOR EQUALITY;

BEHAVIOUR
RecordType Behaviour BEHAVIOUR
DEFINED AS " This information element indicates the type of the UMR and it also indicates the way some of the following information elements are used. ";

REGISTERED AS { ducAttribute 6};

9.2.4.7 Start Time Stamp

startTimeStamp ATTRIBUTE
WITH ATTRIBUTE SYNTAX DavicUsageCMIPModuleV0.StartTimeStamp;
MATCHES FOR EQUALITY;
BEHAVIOUR
startTimeStampBehaviour BEHAVIOUR
DEFINED AS " This attribute contains a time stamp for the start of the call. The start time is defined as either the seizure time for a non-answered call, when the exchange is ready for receiving digits or for an answered call, the time when a call is answered, i.e. the receipt of an answer message. If the UMR is generated by an event concerning a supplementary service not related to a call, then this information element contains the time stamp for that event. Date and time values are derived from the exchange clock. This attribute includes year, month, day, hour, minute and second and centisecond. For partial outputs the start date time is the end time when the previous output was made.";
REGISTERED AS { ducAttribute 7};

9.2.4.8 Calling Party Number

callingPartyNumber ATTRIBUTE
WITH ATTRIBUTE SYNTAX DavicUsageCMIPModuleV0.CallingPartyNumber;

 © ISO/IEC 1999 - All rights reserved

Copyright International Organization for Standardization
Provided by IHS under license with ISO
No reproduction or networking permitted without license from IHS Not for Resale

MATCHES FOR EQUALITY;
BEHAVIOUR
callingPartyNumberBehaviour BEHAVIOUR
DEFINED AS "This attribute contains the telephone number of the calling party.
The calling party will, for non UPT calls be identical to the calling party user. For call type calls and when subscribing to either MSN or DDI the information element indicates the screened and verified number for transfer towards the called subscriber. This attribute contains the default number if the exchange is requested to use that number for transfer towards the called subscriber. If the UMR is generated due to an event concerning a supplementary service then this attribute contains the telephone number of the subscriber that caused the event. It should be noted that in the case of an exchange with a diverted call, the subscriber for which the UMR is generated is indicated by the redirecting number.";;
REGISTERED AS { ducAttribute 8};

9.2.4.9 Called Party Number

calledPartyNumber ATTRIBUTE
WITH ATTRIBUTE SYNTAX DavicUsageCMIPModuleV0.CalledPartyNumber;
MATCHES FOR EQUALITY;
BEHAVIOUR
calledPartyNumberBehaviour BEHAVIOUR
DEFINED AS "This attribute contains the telephone number of the called subscriber if the UMR is generated due to a call. If the UMR is generated due to activation or invocation of the diversion supplementary service, then attribute contains the telephone number of the diverted - to number. In special cases this attribute may contain the translated number. This would be the case when abbreviated dialling is used. ";;
REGISTERED AS { ducAttribute 9};

9.2.4.10 Bearer service

bearerService ATTRIBUTE
WITH ATTRIBUTE SYNTAX DavicUsageCMIPModuleV0.BearerService;
MATCHES FOR EQUALITY;
BEHAVIOUR
bearerServiceBehaviour BEHAVIOUR
DEFINED AS " This attribute contains the bearer capability information for a call or an event concerning a supplementary service.";;
REGISTERED AS { ducAttribute 10};

9.2.4.11 Service User

serviceUser ATTRIBUTE
WITH ATTRIBUTE SYNTAX DavicUsageCMIPModuleV0.ServiceUser;
MATCHES FOR EQUALITY;
BEHAVIOUR
serviceUserBehaviour BEHAVIOUR
DEFINED AS "This attribute provides information of the party whose use of resources has been accounted for. The information provided in this element is a pointer to the party number provided elsewhere in the record. In the case where e.g. the UMR is generated on a transit exchange and no calling party number is available, this element will indicate that the service user is unknown. ";;
REGISTERED AS { ducAttribute 11};

Copyright International Organization for Standardization
Provided by IHS under license with ISO
No reproduction or networking permitted without license from IHS Not for Resale

9.2.4.12 Call identification Number

callIdentificationNumber ATTRIBUTE
WITH ATTRIBUTE SYNTAX DavicUsageCMIPModuleV0.CallIdentificationNumber;
MATCHES FOR EQUALITY;
BEHAVIOUR
callIdentificationNumberBehaviour BEHAVIOUR
DEFINED AS "An identification number that identifies the call. All records produced for the same call have the same call identification number. With the call identification number it is possible to link partial outputs, outputs due to supplementary services during the call and to discriminate between simultaneous call establishments. It should be stressed that the call identification value only has local (exchange) significance.";;
REGISTERED AS { ducAttribute 12};

9.2.4.13 Immediate notification

This attribute may be used to define the filter of an event forwarding discriminator.

immediateNotification ATTRIBUTE

WITH ATTRIBUTE SYNTAX

DavicUsageCMIPModuleV0.ImmediateNotification;

MATCHES FOR EQUALITY;

BEHAVIOUR
immediateNotificationBehaviour BEHAVIOUR
DEFINED AS " This attribute shall contain an indication that the record requires immediate data transfer to the OS. This standard does not specify if this indication is due to a subscriber action or contained in the user data. ";

REGISTERED AS { ducAttribute 13};

9.2.4.14 Network Release Cause

NetworkReleaseCause ATTRIBUTE
WITH ATTRIBUTE SYNTAX
DavicUsageCMIPModuleV0.NetworkReleaseCause;
MATCHES FOR EQUALITY;
BEHAVIOUR
causeBehaviour BEHAVIOUR
DEFINED AS " This attribute indicates the cause and location value for the termination of the call. The location value shall indicate the origin of the cause value. Cause and location values can be used for statistical purposes or for determining whether the subscriber should be charged with call attempt charge or not. In the case this information is not included in the UMR it is assumed that the call is successful.";
REGISTERED AS { ducAttribute 14};

9.2.4.15 Personal User Identification

personalUserId ATTRIBUTE

WITH ATTRIBUTE SYNTAX DavicUsageCMIPModuleV0.PersonalUserId;

MATCHES FOR EQUALITY;

 © ISO/IEC 1999 - All rights reserved

Copyright International Organization for Standardization
Provided by IHS under license with ISO
No reproduction or networking permitted without license from IHS Not for Resale

BEHAVIOUR
personalUserIdBehaviour BEHAVIOUR
DEFINED AS " This element only has relevance when UPT calls are made. It is a network requirement that the provided international personal User Identity is unique and verified by the network.";;

REGISTERED AS { ducAttribute 15};

9.2.4.16 Partial Generation

partialGeneration ATTRIBUTE
WITH ATTRIBUTE SYNTAX DavicUsageCMIPModuleV0.PartialGeneration;
MATCHES FOR EQUALITY;
BEHAVIOUR
partialGenerationBehaviour BEHAVIOUR
DEFINED AS "This attribute is included if the UMR output is partial. Included in the element is a field indicating the reason for partial output and if the record is the last record of a sequence of partial records. This information element shall also contain a partial record number, which consecutively numbers the partial records in a specific call.";
REGISTERED AS { ducAttribute 16};

9.2.4.17 Charging Information

chargingInformation ATTRIBUTE
WITH ATTRIBUTE SYNTAX
ASN1DAVICUsageMeteringCMIPModule.ChargingInformation;
MATCHES FOR EQUALITY;
BEHAVIOUR
chargingInformationBehaviour BEHAVIOUR
DEFINED AS " This attribute contains the Charging Information generated by an NE which is capable of charging. This information can either be passed on to the billing application or in the case where the NE calculates Charging Information for presentation to the user, this information can be used to compare the values generated by the off-line charging application. The attribute contains both a call charge rate as well as the number of call charge units.";
REGISTERED AS { ducAttribute 17};

9.2.4.18 Standard Extensions

standardExtensions ATTRIBUTE

WITH ATTRIBUTE SYNTAX DavicUsageCMIPModuleV0.StandardExtensions;

MATCHES FOR EQUALITY;

BEHAVIOUR
standardExtensionBehaviour BEHAVIOUR
DEFINED AS " This field enables future standardized extensions of the notifications.";

REGISTERED AS { ducAttribute 18};

9.2.4.19 Record Extensions

recordExtensions ATTRIBUTE

WITH ATTRIBUTE SYNTAX DavicUsageCMIPModuleV0.RecordExtensions;

© ISO/IEC 1999 - All rights reserved

Copyright International Organization for Standardization
Provided by IHS under license with ISO
No reproduction or networking permitted without license from IHS Not for Resale

MATCHES FOR EQUALITY;

BEHAVIOUR
recordExtensionBehaviour BEHAVIOUR
DEFINED AS " This field enables network operators and/ or manufacturers to add their own extensions to the standard record definitions. This field contains a set of management extension as defined in CCITT X.721.";

REGISTERED AS { ducAttribute 19};

9.2.4.20 Service Subscriber Id

serviceSubscriberId ATTRIBUTE
WITH ATTRIBUTE SYNTAX DavicUsageCMIPModuleV0.ServiceSubscriberId;
MATCHES FOR EQUALITY;
BEHAVIOUR
serviceSubscriberIdBehaviour BEHAVIOUR
DEFINED AS "This attribute identifies the subscriber who is responsible for the service subscription . This is the party that has overall financial responsible for that subscription ";
REGISTERED AS { ducAttribute 20};

9.2.4.21 STU Id

sTUId ATTRIBUTE
WITH ATTRIBUTE SYNTAX DavicUsageCMIPModuleV0.STUId;
MATCHES FOR EQUALITY;
BEHAVIOUR
sTUIdBehaviour BEHAVIOUR
DEFINED AS "This attribute identifies the individual set top unit and must be unique at least within the scope of service and network providers that access the information. ";
REGISTERED AS { ducAttribute 21};

9.2.4.22 STU Type

sTUType ATTRIBUTE
WITH ATTRIBUTE SYNTAX ASN1DAVICUsageMeteringCMIPModule.STUType;
MATCHES FOR EQUALITY;
BEHAVIOUR
sTUTypeBehaviour BEHAVIOUR
DEFINED AS "This attribute identifies the set top unit type. The type allows identification of the capabilities that the set top unit possesses and may be used in billing and service selection. ";
REGISTERED AS { ducAttribute 22};

9.2.4.23 STU Version

sTUVersion ATTRIBUTE
WITH ATTRIBUTE SYNTAX DavicUsageCMIPModuleV0.STUVersion;
MATCHES FOR EQUALITY;
BEHAVIOUR
sTUVersionBehaviour BEHAVIOUR
DEFINED AS "This attribute identifies the version of the software and hardware of the set top unit. This information may be useful in interpreting the Usage Data received from the STU. ";
REGISTERED AS { ducAttribute 23};

 © ISO/IEC 1999 - All rights reserved

Copyright International Organization for Standardization
Provided by IHS under license with ISO
No reproduction or networking permitted without license from IHS Not for Resale

9.2.4.24 Service Provider Id

serviceProviderIdATTRIBUTE
WITH ATTRIBUTE SYNTAX DavicUsageCMIPModuleV0.ServiceProviderId;
MATCHES FOR EQUALITY;
BEHAVIOUR
serviceProviderIdBehaviour BEHAVIOUR
DEFINED AS "This attribute identifies the provider of the application service. ";
REGISTERED AS { ducAttribute 24};

9.2.4.25 Network Provider Id

networkProviderId ATTRIBUTE
WITH ATTRIBUTE SYNTAX DavicUsageCMIPModuleV0.NetworkProviderId;
MATCHES FOR EQUALITY;
BEHAVIOUR
networkProviderIdBehaviour BEHAVIOUR
DEFINED AS "This attribute identifies the provider of the delivery system service. ";
REGISTERED AS { ducAttribute 25};

9.2.4.26 Application Type

applicationType ATTRIBUTE
WITH ATTRIBUTE SYNTAX DavicUsageCMIPModuleV0.ApplicationType;
MATCHES FOR EQUALITY;
BEHAVIOUR
applicationTypeBehaviour BEHAVIOUR
DEFINED AS "This attribute identifies the application being used by the serevice consumer. Valid values include video-on-demand and pay per view. The valid value set will grow as the capabilities of DAVIC are increased in subsequent releases. ";
REGISTERED AS { ducAttribute 26};

9.2.4.27 Content Id

contentId ATTRIBUTE
WITH ATTRIBUTE SYNTAX DavicUsageCMIPModuleV0.ContentId;
MATCHES FOR EQUALITY;
BEHAVIOUR
contentIdBehaviour BEHAVIOUR
DEFINED AS "This attribute identifies the application content that is provided to the user. It is an integer that identfies i the content. ";
REGISTERED AS { ducAttribute 27};

9.2.4.28 Usage Event Information List

usageEventInformationList ATTRIBUTE
WITH ATTRIBUTE SYNTAX
DavicUsageCMIPModuleV0.UsageEventInformationList;
MATCHES FOR EQUALITY;
BEHAVIOUR
usageEventInformationListBehaviour BEHAVIOUR
DEFINED AS "This attribute provides the details concerning the way the service was used by the consumer. It is a complex attribute that specifies every event generated by the user; e.g. pausing, rewinding stopping, and the associated duration of the event, if appropriate. ";

Copyright International Organization for Standardization
Provided by IHS under license with ISO
No reproduction or networking permitted without license from IHS Not for Resale

REGISTERED AS { ducAttribute 28};

9.2.4.29 Service Release Cause Indication

serviceReleaseCauseIndication ATTRIBUTE
WITH ATTRIBUTE SYNTAX
DavicUsageCMIPModuleV0.ServiceReleaseCauseIndication;
MATCHES FOR EQUALITY;
BEHAVIOUR
serviceReleaseCauseIndicationBehaviour BEHAVIOUR
DEFINED AS "This attribute provides the cause for termination of the service. The value specified allows indication that the underlying network service provider released the connection, however, details concerning the cause for the network release are not specified.";
REGISTERED AS { ducAttribute 29};

9.2.4.30 Data Generating Element Id

dataGeneratingElementId ATTRIBUTE
WITH ATTRIBUTE SYNTAX
DavicUsageCMIPModuleV0. DataGeneratingElementId;
MATCHES FOR EQUALITY;
BEHAVIOUR
dataGeneratingElementIdBehaviour BEHAVIOUR
DEFINED AS "This attribute identifies the DAVIC Element that generated the Usage Data.";
REGISTERED AS { ducAttribute 30};

9.2.4.31 Data Generating Element Type

dataGeneratingElementType ATTRIBUTE
WITH ATTRIBUTE SYNTAX DavicUsageCMIPModuleV0.DataGeneratingElementType;
MATCHES FOR EQUALITY;
BEHAVIOUR
dataGeneratingElementTypeBehaviour BEHAVIOUR
DEFINED AS "This attribute identifies the element type of the device that generated the Usage Data. E.g. STU type, server type, switch type, etc."
REGISTERED AS { ducAttribute 31};

9.2.4.32 Data Validity

dataValidity ATTRIBUTE
WITH ATTRIBUTE SYNTAX DavicUsageCMIPModuleV0.DataValidity;
MATCHES FOR EQUALITY;
BEHAVIOUR
dataValidtyTypeBehaviour BEHAVIOUR
DEFINED AS "This attribute provides an indication whether or not the Usage Data being provided is accurate. The data may be corrupted due to failures occurring in the DAVIC Element during the service."
REGISTERED AS { ducAttribute 32};

9.2.4.33 Service Consumer Id

serviceConsumerId ATTRIBUTE
WITH ATTRIBUTE SYNTAX DavicUsageCMIPModuleV0.ServiceConsumerId;

 © ISO/IEC 1999 - All rights reserved

--`,,```,,,,````-`-`,,`,,`,`,,`---

Copyright International Organization for Standardization
Provided by IHS under license with ISO
No reproduction or networking permitted without license from IHS Not for Resale

MATCHES FOR EQUALITY;
BEHAVIOUR
serviceConsumerIdBehaviour BEHAVIOUR
DEFINED AS "This attribute the actual user of the service. It need not be the subscriber. The identifier may have been provided to the service provider by, for example, an electronic smart-card."
REGISTERED AS { ducAttribute 33};

9.2.4.34 Quoted price

quotedPrice ATTRIBUTE
WITH ATTRIBUTE SYNTAX DavicUsageCMIPModuleV0.QuotedPrice;
MATCHES FOR EQUALITY;
BEHAVIOUR
quotedPriceBehaviour BEHAVIOUR
DEFINED AS "This attribute contains the price that was quoted to the consumer for use of the service. The price quote may have been made in advance, during or after the service (e.g. advice of charging). The quoted price is expected to be the maximum price the user will pay. Discounts based on total subsequent usage may reduce the actual amount the consumer will be charged."
REGISTERED AS { ducAttribute 34};

9.2.4.35 Data Generating Element Correlation Key

dataGeneratingElementCorrelationKey ATTRIBUTE
WITH ATTRIBUTE SYNTAX
DavicUsageCMIPModuleV0.DataGeneratingElementCorrelationKey;
MATCHES FOR EQUALITY;
BEHAVIOUR
dataGeneratingElementTypeBehaviour BEHAVIOUR
DEFINED AS "This attribute allows correlation of information generated in a single DAVIC element."
REGISTERED AS { ducAttribute 35};

9.2.4.36 Server Identification

serverId ATTRIBUTE
WITH ATTRIBUTE SYNTAX DavicUsageCMIPModuleV0.ServerId;
MATCHES FOR EQUALITY;
BEHAVIOUR
serverIdBehaviour BEHAVIOUR
DEFINED AS "This attribute identifies the server that provided service to the consumer."
REGISTERED AS { ducAttribute 36};

9.2.4.37 Data Priority

dataPriority ATTRIBUTE
WITH ATTRIBUTE SYNTAX DavicUsageCMIPModuleV0.DataPriority;
MATCHES FOR EQUALITY;
BEHAVIOUR
dataPriorityBehaviour BEHAVIOUR
DEFINED AS "This attribute specifies whether the data is required for real-time billing or not."
REGISTERED AS { ducAttribute 37};

--`,,```,,,,````-`-`,,`,,`,`,,`---

Copyright International Organization for Standardization
Provided by IHS under license with ISO
No reproduction or networking permitted without license from IHS Not for Resale

9.2.5 Actions

9.2.5.1 Create File

createFile ACTION
BEHAVIOUR
createFileBhv BEHAVIOUR
DEFINED AS " Receipt of this action causes the creation of a file containing the concatenated content of the specified event records. If no paramters are specified in the action then the file is created from all the records currently contained in the log. Optionally the action may specify the lowest record number that is to be contained in the file. For logs where the record number has wrapped, the record time is used to determine that this has occured and the "wrapped" records shall be included in the created file. The action argument may also specify that the records contained in the log should be deleted upon succesful creation of the file. The action response contains the name and size of the created file." ;

MODE CONFIRMED;
WITH INFORMATION SYNTAX ASN1DAVICUsageMeteringCMIPModule.CreateFileArgument;
WITH REPLY SYNTAX ASN1DAVICUsageMeteringCMIPModule.CreateFileResponse;
REGISTERED AS { ducAction 1};

9.2.6 Notifications

Unless otherwise stated, all notifications shall be sent via the M-EVENT-REPORT operation in confirmed mode.

9.2.6.1 Blocked record Notification

blockedRecordNotification NOTIFICATION

BEHAVIOUR blockedRecordNotificationBehaviour

BEHAVIOUR DEFINED AS

“This notification is emitted whenever one of the triggering events described in the object class template occurs. The notification consists of a concatenation of the content of the usage metering records currently contained in the blockGeneratingLog; i.e. the usage metering records without the record overhead (Record Id, Managed Object Class and Instance and Logging Time).";;
WITH INFORMATION SYNTAX
ASN1DAVICUsageMeteringCMIPModule. BlockedRecordInfo
REGISTERED AS {ducNotification 1};

9.2.6.2 File Creation Notification

fileCreationNotification NOTIFICATION
BEHAVIOUR
fileCreationNotificationBhv BEHAVIOUR
DEFINED AS " This notification is emitted whenever the fileGeneratingLog creates a new file in order to let the managing system know that the file is available for retrieval.";;
WITH INFORMATION SYNTAX ASN1DAVICUsageMeteringCMIPModule.FileCreationInfo;
REGISTERED AS { ducNotification 2};

9.2.6.3 Delivery System Usage metering Record Notification

deliverySystemUsageMeteringRecordNotification NOTIFICATION

 © ISO/IEC 1999 - All rights reserved

Copyright International Organization for Standardization
Provided by IHS under license with ISO
No reproduction or networking permitted without license from IHS Not for Resale

BEHAVIOUR

deliverySystemUsageMeteringRecordNotificationBehaviour BEHAVIOUR

DEFINED AS "This notification is issued to transmit a delivery system usage metering record. The "immediate notification" may be used by the Call Forwarding Discriminator to select records requiring real time handling by the OS.";;

WITH INFORMATION SYNTAX
ASN1DAVICUsageMeteringCMIPModule.DeliverySystemUsageRecord
AND ATTRIBUTE IDS

recordType	recordType
startTimeStamp	startTimeStamp
callingPartyNumber	callingPartyNumber
calledPartyNumber	calledPartyNumber
bearerService	bearerService
serviceUser	serviceUser
callIdentificationNumber	callIdentificationNumber
immediateNotification	immediateNotification
networkReleaseCause	networkReleaseCause
networkProviderId	networkProviderId
partialGeneration	partialGeneration
usageGeneratingDavicElement	usageGeneratingDavicElement
correlationKey	correlationKey
chargingInformation	chargingInformation
personalUserId	personalUserId
callDuration	callDuration
standardExtensions	standardExtensions
recordExtensions	recordExtensions

;
REGISTERED AS {ducNotification 3};

9.2.6.4 Service Usage metering Record Notification

serviceUsageMeteringRecordNotification NOTIFICATION

BEHAVIOUR

serviceUsageMeteringRecordNotificationBehaviour BEHAVIOUR

DEFINED AS "This notification is issued to transmit a service usage metering record. The "immediate notification" may be used by the Call Forwarding Discriminator to select records requiring real time handling by the OS.";;

WITH INFORMATION SYNTAX ASN1DAVICUsageMeteringCMIPModule.ServiceUsageRecord
AND ATTRIBUTE IDS

recordType	recordType
serviceSubscriberId	serviceSubscriberId
serviceConsumerId	serviceConsumerId
sTUId	sTUId
sTUType	sTUType
sTUVersion	sTUVersion
serviceProviderId	serviceProviderId
applicationType	applicationType

Copyright International Organization for Standardization
Provided by IHS under license with ISO
No reproduction or networking permitted without license from IHS Not for Resale

contentId	contentId
usageEventInformationList	usageEventInformationList
serviceReleaseCauseIndication	serviceReleaseCauseIndication
dataValidity	dataValidity
quotedPrice	quotedPrice
dataGeneratingElementCorrelationKey	dataGeneratingElementCorrelationKey
serverId	serverId
dataPriority	dataPriority
dataGeneratingElementId	dataGeneratingElementId
dataGeneratingElementType	dataGeneratingElementType;

REGISTERED AS {ducNotification 4};

9.2.7 Name Bindings

No name bindings for the usageMeterData object class are provided in this specification because of the variety of accountable objects for which the Usage Data can be collected. Users of this specification specializing the usage data are expected to specify name bindings for usageMeterData or its subclasses to make them instantiable.

For simpleUsageMeteringControl object, the name binding specified for the superclass in X.742.

9.2.8 ASN.1 Defined Types Module

```
DavicUsageCMIPModuleV0 {davic usageInformationModel(0) asn1Module(2)
DavicUsageCMIPModuleV0(0)}

DEFINITIONS IMPLICIT TAGS  ::=
BEGIN

-- EXPORTS  everything

IMPORTS
ObjectInstance FROM CMIP-1 { joint-iso-ccitt ms (9) cmip (1) modules  (0) protocol (3) }
---see X.711
ManagementExtension  FROM Attribute-ASN1Module { joint-iso-ccitt ms(9) smi (3) part2 (2)
asn1Module(1) 1}
---see X.721
NameType FROM ASN1DefinedTypesModule {ccitt(0) recommendation(0) m(13) gnm(3100)
informationModel(0) asn1Modules(2) asn1DefinedTypesModule(0)};
---see M.3100
-- NOTE: Need to add imports from X.742.


-- OBJECT IDENTIFIERS
davic OBJECT IDENTIFIER         ::= {enterprises davic (1493)}

davicUsageCMIP OBJECT IDENTIFIER ::= { davic usageInformationModel(0)}
ducASN1Module OBJECT IDENTIFIER ::= { davicUsageCMIP asn1Module(2)}
ducObjectClass OBJECT IDENTIFIER ::= { davicUsageCMIP managedObjectClass(3)}
```

 © ISO/IEC 1999 - All rights reserved

Copyright International Organization for Standardization
Provided by IHS under license with ISO
No reproduction or networking permitted without license from IHS Not for Resale

```
ducPackage OBJECT IDENTIFIER ::= { davicUsageCMIP package(4)}
ducNameBinding OBJECT IDENTIFIER ::= { davicUsageCMIP nameBinding(6)}
ducAttribute OBJECT IDENTIFIER ::= { davicUsageCMIP attribute(7)}
ducAction OBJECT IDENTIFIER ::= { davicUsageCMIP action(9)}
ducNotification OBJECT IDENTIFIER ::= { davicUsageCMIP notification(10)}
ducBehaviour OBJECT IDENTIFIER ::= { davicUsageCMIP behaviour(11)}

BlockedRecordInfo                       ::= SEQUENCE            {
        blockHeaderRecord       [0]     BlockHeaderRecord       OPTIONAL,
        usageRecords            [1]     SEQUENCE OF StrippedRecord }

BlockHeaderRecord                       ::= SEQUENCE  {
        dataGeneratingElementId         [0] DataGeneratingElementId OPTIONAL,
        dataGeneratingElementType       [1] DataGeneratingElementType OPTIONAL,
        sequenceNumber                  [3] SequenceNumber,
        reasonForOutput                 [4] ReasonForOutput  OPTIONAL,
        extensions                      [5] ManagementExtensions OPTIONAL }

--      Note: StrippedRecord has similar syntax to RecodContent except that the choice productions
--      omit information added by the log i.e. current logging time, managed object class, managed
--      object instance and recordId.

-- FILE CONTENTS
UsageMeteringRecordFile ::=     SEQUENCE      {
        header          FileHeaderRecord,
        body            SEQUENCE OF Stripped Record ,
        trailer         Trailer   OPTIONAL}

Header                          ::=     SEQUENCE      {
        productionDateTime              StartDateTime,
        exchangeInfo                    ExchangeInfo,
        fileName                        FileName,
        reasonForOutput         ReasonForOutput,
        firstRecordId                   RecordId OPTIONAL -- present if the requested first
--      record id is different from what was requested in the created file request
        extensions                      ManagementExtensions Optional}

Trailer                         ::=     SEQUENCE      {
        numberOfRecords                 [0]     INTEGER,
        lastRecordId                    [1]     INTEGER }

-- USAGE RECORDS

ServiceUsageRecord              ::=     SEQUENCE {
        recordType                      [0] RecordType,
        serviceSubscriberId             [1] ServiceSubscriberId,
        serviceConsumerId               [2] ServiceConsumerId OPTIONAL,
        sTUId                           [3] STUId,
        sTUType                         [4] STUType,
        sTUVersion                      [5] STUVersion,
        serviceProviderId               [6] ServiceProviderId,
```


Copyright International Organization for Standardization
Provided by IHS under license with ISO
No reproduction or networking permitted without license from IHS Not for Resale

```
        applicationType                         [7] ApplicationType,
        contentId                               [8] ContentId,
        usageEventInformationList               [9] UsageEventInformationList,
        serviceReleaseCauseIndication           [10] ServiceReleaseCauseIndication,
        dataValidity                            [11] DataValidity,
        quotedPrice                             [12] QuotedPrice OPTIONAL,
        dataGeneratingElementCorrelationKey     [13] DataGeneratingElementCorrelationKey
                                                                    OPTIONAL,
        serverId                                [14] ServerId OPTIONAL,
        dataPriority                            [15] DataPriority OPTIONAL,
        dataGeneratingElementId                 [17] DataGeneratingElementId OPTIONAL,
        dataGeneratingElementType               [18] DataGeneratingElementType OPTIONAL;;;


DeliverySystenUsageRecord                       ::=     SEQUENCE                {
        recordType                      [0]     RecordType,
        startTimeStamp                  [1]     StartTimeStamp,
        callingPartyNumber              [2]     CallingPartyNumber OPTIONAL,
        calledPartyNumber               [3]     CalledPartyNumber OPTIONAL,
        bearerService                   [4]     BearerService,
        serviceUser                     [5]     ServiceUser,
        callIdentificationNumber        [6]     CallIdentificationNumber OPTIONAL,
        immediateNotification           [7]     ImmediateNotification   OPTIONAL,
        networkReleaseCause             [8]     NetworkReleaseCause OPTIONAL,
        networkProviderId               [9]     NetworkProviderId OPTIONAL,
        partialGeneration               [10]    PartialGeneration  OPTIONAL,
        usageGeneratingDavicElement     [11]    UsageGeneratingDavicElement OPTIONAL,
        correlationKey                  [12]    CorrelationKey OPTIONAL,
        chargingInformation             [13]    ChargingInformation OPTIONAL,
        personalUserId                  [14]    PersonalUserId
        callDuration                    [24]    CallDuration OPTIONAL,
        standardExtensions              [26]    StandardExtensions OPTIONAL,
        recordExtensions                [30]    RecordExtensions OPTIONAL}


ApplicationType         ::=  ENUMERATED {
                        videoOnDemand  (0),
                        nearVideoOnDemand (1),
                        payPerView (2) ... }


ATMProfile              ::= SET of AtmCharateristics


AtmCharacteristics      ::= SEQUENCE {
                        upstreamVPCINumber              INTEGER,
```

 © ISO/IEC 1999 - All rights reserved

Copyright International Organization for Standardization
Provided by IHS under license with ISO
No reproduction or networking permitted without license from IHS
Not for Resale

```
                upstreamVCINumber           INTEGER OPTIONAL,
                upstreamTrafficParameters   TrafficParameters
                upstreamQoS                 QoS
                downstreamVPCINumber        INTEGER,
                downstreamVCINumber         INTEGER OPTIONAL,
                downstreamTrafficParameters TrafficParameters
                downstreamQoS               QoS}
```

-- NOTE: QoS and Traffic parameter specification to be taken from signaling protocol Q.2931

```
AutomaticRecordDeletion ::=     BOOLEAN


BearerService           ::=     SEQUENCE {
        capability      ENUMERATED {
                speech (0),
                audio3dot1kHZ (1),
                uni64 (2),
                uni64withT-A (3),
                multipleRate (4),
                packetModeB-Ch (5)
                atm (6) ... },
        multiplier      [1] INTEGER (2..30) OPTIONAL,
        atmProfile      [2] AtmProfile OPTIONAL}
--      Multiplier present only if capability = multipleRate
--      atmProfile required only if ATM bearer has been specified


CalledPartyNumber       ::= Number


CallingPartyNumber      ::= Number


CallIdentificationNumber ::=    OCTET STRING (SIZE(4))
-- 4 byte number identifying the call.


ChargedDirectoryNumber ::=      Number



ChargingInformation             ::= CHOICE {
        recordedCurrency        [0]     IA5String (SIZE (1…10)),
        recordedUnitsList       [1]     RecordedUnitsList,
        freeOfCharge            [2]     NULL,
        chargeInfoNotAvailable  [3]     NULL}



CauseValue                      ::=     BIT STRING (SIZE(8))
--      Coded according to Ref. [7]: Table 1/Q.850
```


Copyright International Organization for Standardization
Provided by IHS under license with ISO
No reproduction or networking permitted without license from IHS Not for Resale

```
ContentId                ::= INTEGER(1..16777216)

CorrelationKey           ::= INTEGER (SIZE (1…16))

CreationTriggerList      ::=    SET OF CreationTrigger

CreationTrigger          ::=    ENUMERATED{
            seizure                              (0),
            firstDigit                           (1),
            aCMReceived                          (2),
--      For a local calls this time will correspond to the time for generation of ACM on external calls .
            b-Answer                             (3),
            supplementaryServiceInvocation       (4),
            supplementaryServiceInput            (5),
            applicationServiceInvocation         (6) ...
-- e.g. request to play a video;
            }


DataGeneratingElementId ::= VisibleString (SIZE (1..10))

DataGeneratingElementType    ::= VisibleString (SIZE (1..6))

DataGeneratingElementCorrelationKey ::= INTEGER

DataPriority             ::= ENUMERATED {
                             realTime (0),
                             nonRealTime (1) }

DataValidity             ::=  BOOLEAN – TRUE means data is valid

DeliverySystemUsageDuration ::= Duration

ImmediateNotification    ::=    BOOLEAN

NetworkProviderId        ::= VisibleString (SIZE (1..8))

NetworkReleaseCause                          ::=    SEQUENCE {
            causeValue      CauseValue,
            location        Location}
-- This paramter provides the reason why the delivery system has released a connection.


Number ::=      OCTET STRING (SIZE (1 .. 14))
--      This type is used to represent a number for addressing purposes. It is composed of
```

 © ISO/IEC 1999 - All rights reserved

Copyright International Organization for Standardization
Provided by IHS under license with ISO
No reproduction or networking permitted without license from IHS Not for Resale

```
--      a) one octet for odd/even indicator and natur of address indicator
--      b) one octet for  numbering plan indicator
--      c) digits of the address encoded as TBCD String
--              a)
--                      bits 8:         Odd/even indicator
--                      0       even number of address signals
--                      1 odd number of address signals

--                      bits 7654321: Nature of address indicator
--                              0000000         spare
--                              0000001         subscriber number
--                              0000010         unknown
--                              0000011         national (significant) number
--                              0000100         international number
--                              0000101 )
--                              to      } spare
--                              1101111 )
--                              1110000 )
--                              to      } reserved for national use
--                              1111110 )
--                              1111111         spare
--              b)
--                      bits 765: numbering plan indicator
--                               000            spare
--                               001            ISDN(Telephony) Number Plan (Rec CCITT E.164)
--                              010             spare
--                              011             data numbering plan (CCITT Rec. X.121)
--                              100             telex numbering plan (CCITT Rec. F.69)
--                              101             reserved for national use
--                              110             reserved for national use
--                              111             spare
--
--              c) The following octets representing digits of an address encoded as a TBCD-STRING.
--      TBCD-STRING             ::=     OCTET STRING
--      This type (Telephony Binary Coded Decimal String) is used to represent digits from 0
--      through 9, *, #, a, b, c, two digits per octet, each digit encoded 0000 to 1001 (0 to 9), 1010 (*),
--      1011(#), 1100 (a), 1101 (b) or 1110 (c); 1111 (end of pulsing signal-ST); 0000 is used as a filler
--      when there is an odd number of digits.
--      The most significant address signal is sent first. Subsequent address signals are sent in
--      successive 4-bit fields.



PartialGeneration               ::=  SET  {
        partialRecordNumber     [0]     PartialRecordNumber,
        partialRecordReason     [1]     PartialRecordReason     OPTIONAL}

PartialRecordReason             ::= ENUMERATED {
                timeLimit       (0),
                serviceChange   (1),
                overflow        (2),
                networkInternalReasons  (3)
                lastRecord      (4)}



PersonalCodeInput               ::=     OCTET STRING (SIZE (1..18))
```


Copyright International Organization for Standardization
Provided by IHS under license with ISO
No reproduction or networking permitted without license from IHS Not for Resale

```
PersonalUserId   ::=      OCTET STRING (SIZE (1 .. 10))
--       This type is used to represent the Personal User Id. For UMT the Personal User Id is defined
--       according to E.212 as a International Mobil Station Identity (IMSI).


QuotedPrice              ::= SEQUENCE {
                             currencyUnit     IA5String (SIZE (1…10)),
                             usageAmount      INTEGER (0..16777215)}
-- usageAmount always has units quoted to two decimal-point accuracy


ReasonForOutput          ::=      ENUMERATED {
                 absoluteTimeEvent              (0),
                 maxBlockSizeReached            (1),
                 maxTimeIntervalElapsed  (2),
                 internalSizeLimitReached (3),
                 oSAction                       (4)}


ReceivedDigits           ::=      OCTET STRING (SIZE (1 .. 18))

RecordExtensions                  ::=      SET OF ManagementExtension
RecordedUnitsList                 ::=      SEQUENCE SIZE (1.. 32) OF RecordedUnits

RecordedUnits                     ::=      SEQUENCE{
                                           CHOICE {
                                  recordedNumberOfUnits [0]      INTEGER (0..16777215),
                                  notAvailable [1]               NULL },
                                  recordedTypeOfUnits            INTEGER(1..16) OPTIONAL }

RecordType               ::=  INTEGER {
                             deliverySystemUsageRecord (0),
                             serviceUsageRecord (10) }


SequenceNumber           ::=  INTEGER


ServiceConsumerId        ::= VisibleString (SIZE (1..16))


ServiceProviderId        ::= VisibleString (SIZE (1..8))


ServiceReleaseCauseIndication      ::= ENUMERATED {
                 normal (1), -- end of service
                 serviceConsumerRequestPremarureServiceEnd (2),
                 serviceProviderInitiatedPremarureServiceEnd (3),
                 networkRelease (4),
```

 © ISO/IEC 1999 - All rights reserved

Copyright International Organization for Standardization
Provided by IHS under license with ISO
No reproduction or networking permitted without license from IHS Not for Resale

```
                abnormalServiceTerminationAtServiceConsumerSide (5),
                abnormalServiceTerminationAtServiceProviderSide (6)}


ServiceSubscriberId     ::= VisibleString (SIZE (1..32))

ServiceUser             ::= ENUMERATED {
                callingParty (0),
                calledParty (1),
                serviceSubscriber (2),
                serviceConsumer (3) }

ServerId                ::= VisibleString (SIZE (1..10))


StandardExtensions      ::=     SET OF ManagementExtension

StartDateTime           ::= OCTET STRING (SIZE(7))
--      YYMMDDHHmmSSCC (Year, Month, Day, Hour, Minute, Second, Centisecond),
--      each field one digit, two digits per octet, the digits 0 through 9, encoded as
--      0000 to 1001 "hstring". 1st digit in the LSB.


STUId                   ::=  VisibleString (SIZE (1..12))

STUType                 ::=  VisibleString (SIZE (1..32))

STUVersion              ::= VisibleString (SIZE (1..10))


UsageGeneratingDAVICElement   ::= VisibleString (SIZE (1…16))
--Identifies the type of element generating the data

UsageEventInformationList     ::= SET OF UsageEventInformation

UsageEventInformation         ::= CHOICE  {
                        discreteEvent           [0] DiscreteEvent,
                        timedEvent              [1] TimedEvent,
                        durationEvent           [2] DurationEvent,
                        countableEvent          [3] CountableEvent}

DiscreteEvent                 ::= SEQUENCE {
```


--`,,```,,,,````-`-`,,`,,`,`,,`---

Copyright International Organization for Standardization
Provided by IHS under license with ISO
No reproduction or networking permitted without license from IHS Not for Resale

```
                    eventType       UsageEventType,
                    eventTime       EventTime}

TimedEvent                  ::= SEQUENCE {
                    eventType       UsageEventType,
                    eventStartTime  EventStartTime
                    eventEndTime    EventEndTime }

DurationEvent               ::= SEQUENCE {
                    eventType       UsageEventType,
                    eventStartTime  EventStartTime
                    duration        Duration}

CountableEvent              ::= SEQUENCE {
                    eventType       UsageEventType,
                    eventCount      INTEGER}

UsageEventType              ::= ENUMERATED {
                    serviceActive (0),
                    servicePaused (1),
                    rewinding (2),
                    fastForward (3),
                    skip (4),
                    serviceDisruption (5) …}

Duration                    ::= INTEGER  -- Specified in centiseconds

EventTime                   ::= GeneralizedTime

EventStartTime              ::= GeneralizedTime

EventEndTime                ::= GeneralizedTime


END  -- end of ASN1DefinedTypesModule
```

 © ISO/IEC 1999 - All rights reserved

Copyright International Organization for Standardization
Provided by IHS under license with ISO
No reproduction or networking permitted without license from IHS Not for Resale

10. Usage Data Transfer Interface

The Usage Data Transfer Interface is used by a DAVIC System Manager to forward Usage Data received from DAVIC Elements to ESSs. In addition, ESSs use the interface to establish and update processing and delivery profiles, which are use by a DAVIC System Manager to determine when, where and how to transfer Usage Data to each ESS.

Associated with the Usage Data Transfer Interface are two different modes of communication for passing Usage Data: Interactive and Bulk. Each communication mode is described below.

The Interactive mode is used for transactional exchanges of Usage Data. It is expected that this communication mode would be used by ESSs wishing to receive Usage Data Records soon after the Usage Data are received from DAVIC Elements. Hence, Usage Data Messages sent by a DAVIC System Manager in Interactive mode would likely contain one or a few Usage Data Records. The protocol interface supporting this mode of communication is the Interactive Usage Data Transfer Interface (I-UDTI).

The Bulk mode is used for batch exchanges of Usage Data. It is expected that this communication mode would be used by ESSs (e.g., existing Billing Systems) which do not support transactional communications and/or do not have real-time needs. In this communication mode, a DAVIC System Manager would send Usage Data Records received from DAVIC Elements in Usage Data Files to ESSs. These files would likely contain many Usage Data Records. The protocol interface supporting this mode of communication is the Bulk Usage Data Transfer Interface (B-UDTI).

The conceptual model is illustrated in Figure 11-8

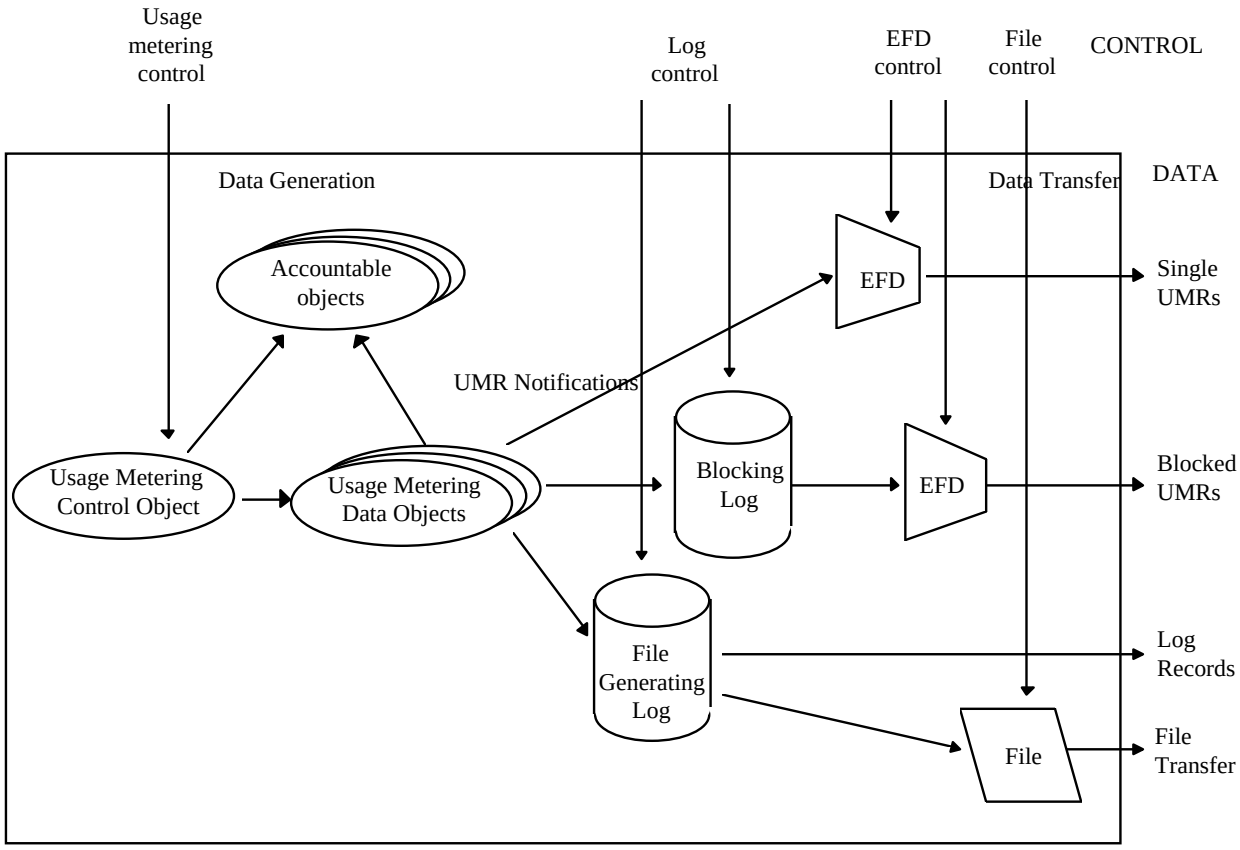

Figure 11-8 — UDTI Data Collection Model

--`,,```,,,,````-`-`,,`,,`,`,,`---

Copyright International Organization for Standardization
Provided by IHS under license with ISO
No reproduction or networking permitted without license from IHS Not for Resale

The remainder of this section describes the I-UDTI and B-UDTI. For the I-UDTI, presented is the protocol stack for the interface. For the B-UDTI, presented are the protocol stack for the interface and the basic structure of the files sent over the interface.

10.1 Interactive Usage Data Transfer Interface

The main use of the Interactive Usage Data Transfer Interface is for the transactional transfer of Usage Data from a DAVIC System Manager to an ESS.

A full protocol stack is used to communicate Usage Data, processing and delivery profile information over the I-UDTI. This interface makes use of the CMIP-based protocol stack defined in ISO/IEC 16500-5 for the S5 information flow. The functionality of this interface is as described in subclause 9.1.2.

10.2 Bulk Usage Data Transfer Interface

The Bulk Usage Data Transfer Interface (B-UDTI) is used to transfer files of Usage Data Records from a DSM to an ESS. These files are called Usage Data Files. Defined below are the structure of Usage Data Files and the protocol stack that is used for the B-UDTI, which is based on the File Transfer Protocol (FTP). Also presented below are the FTP, file-naming convention, file, file storage, and removable medium for this interface.

A DAVIC System Manager must maintain information regarding what Usage Data is desired by an ESS, and when and how to transfer the data to the ESS. An ESS that supports the I-UDTI may use this interface to establish and update this information. An ESS that does not support the I-UDTI would have to use an out-of-band mechanism (e.g., phone call to a DAVIC System Manager administrator) for this purpose

10.2.1 Bulk Usage Data Recording

The special "fileGeneratingLog" is derived from the standard log function as defined in X.735.

The record notifications generated by the UMR Generation Data object instance are stored locally in the DAVIC Element using the logging functionality described in X.735.

The following system management functions are required:

Get/Delete	UsageMeteringLogEntry
Create/Delete	UsageMeteringLog

Besides the functions for retrieval and deletion of log entries provided by the X.735 log control, the FileGenerating Log control provides an extra functionality to support retrieval of UMR records through the file transfer protocol (FTP). This functionality is supported by providing for the creation of a UsageMeteringRecordFile either by means of create request from the ESS or a trigger event internal to the DAVIC Element. When the file has been created a notification is emitted allowing managing systems to be notified of the existance of the file. The records copied to the file will be retained in the log until explicitly deleted by a managing system. This allows for persistance of Usage Data until the integrity of the received Usage Data has been verified. Automatic deletion of the contained records may be specified as a parameter of the file creation action for ESS initiated file creation requests or by a configuration attribute in the log for files createdf due to internal system reasons.

The prescence of more than one ESS interested in collection of Usage Metering Data may be a practical issue. Usage Metering Data may be requested for different purposes by different ESSs at the same time. The possibility of multiple ESS's accessing the fileGenerating Log and IsageMeteringRecordFile is therefore not precluded.

The following system management functions are required:

Action	CreateFile
Notification	FileCreationNotification

 © ISO/IEC 1999 - All rights reserved

Copyright International Organization for Standardization
Provided by IHS under license with ISO
No reproduction or networking permitted without license from IHS Not for Resale

The internal file creation trigger events can be one of the following:

- absolute time event;
- internal size limit reached;

If more than one file trigger is used, there is an interworking between these as defined below.

10.2.1.1 Absolute time event

For the time trigger the internal scheduling mechanism and only the aperiodic scheduling (trigger) packages (daily, weekly and monthly scheduler) as defined in X.746 is used. That means, that transfer of log data to the file store is triggered at absolute times. The absolute time scheduling is not reset, if another triggering event happens.

10.2.1.2 Internal size limit reached

If there is an internal implementation specific limit of the length of a file or Log (buffer size, max. message length, etc.), this may be signalled internally to the Log, which may create a new file with the file trigger cause "internal size limit reached".

10.2.1.3 Action from ESS

When requested by the ESS, the records in the log are copied to a file. The action may contain optionally the filename as a parameter and an indication that the contained records are to be deleted upon succesful creation of the file.

10.2.2 File structure

Usage Data Files contain a file header and a payload that consists of contiguous Usage Data Records. This structure is shown in Figure 11-9.

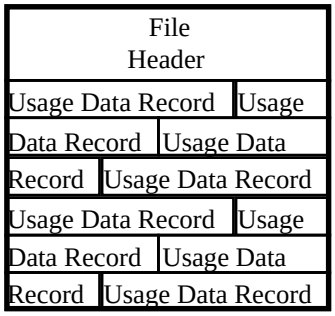

Figure 11-9 — Usage Data File structure

The default format used to represent Usage Data Records transported within a Usage Data File is Abstract Syntax Notation One (ASN.1). It is possible that ESSs may desire the records to be represented in another format, in which case the DSM would have to convert the format of the Usage Data received over the Usage Data Collection Interface from ASN.1 (which is used by SNMP and CMIP) to the desired format. An example of this alternative format is Bellcore Automatic Message Accounting Format (BAF), which is prominent for telephony network elements in the United States.

The file header for files transported over the Usage Data Transfer Interface is shown in Figure 11-10. Table 11-1 contains descriptions of the file header fields. For header fields that span multiple bytes, the high-order bit of the field is the highest-order bit of the highest-numbered byte. Conversely, the low-order bit of a multiple-byte field is the lowest-order bit of the lowest-numbered byte. For example, the high-order bit for the Source Element Identifier field is Bit 7 of Byte 5, and the low-order bit is Bit 0 of Byte 2.

High-order Bit **Low-order Bit**

Copyright International Organization for Standardization
Provided by IHS under license with ISO
No reproduction or networking permitted without license from IHS Not for Resale

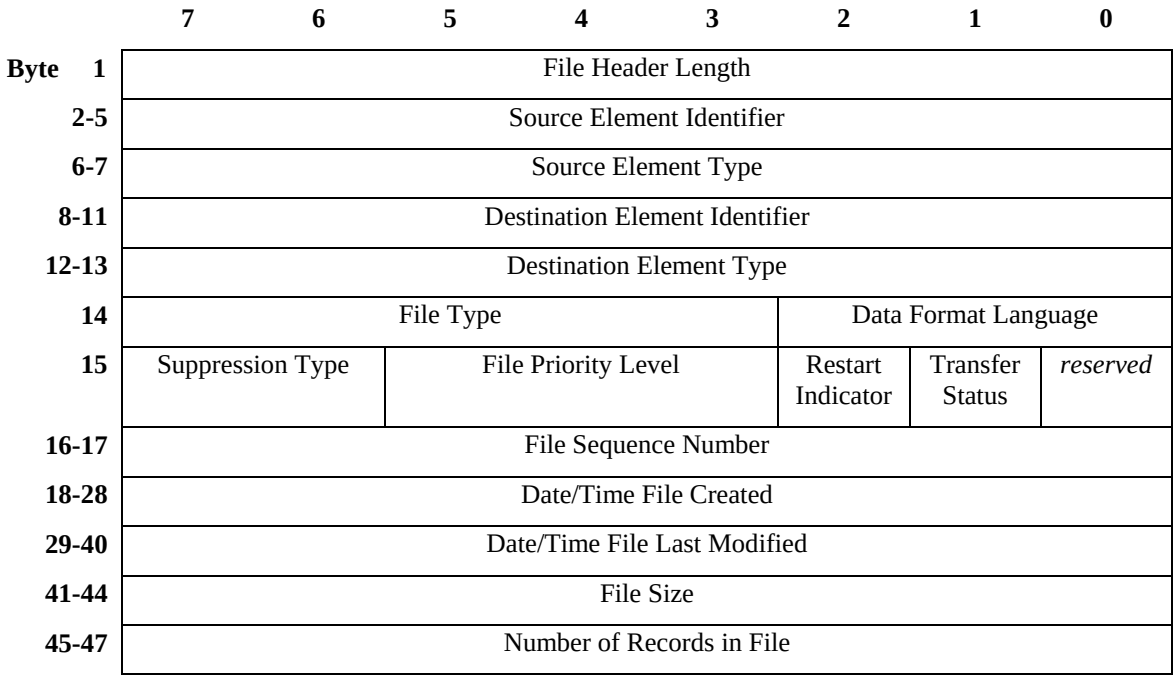

Figure 11-10 — UDTI File Header Format

Table 11-1 — UDTI File Header Field Descriptions

Header Field	Description
File Header Length	definition: length of the file header in bytes (this field allows for subsequent extensions to the file header) syntax: binary number location: Byte 1
Source Element Identifier	definition: identifier for the element sending the file syntax: binary number location: Bytes 2-5
Source Element Type	definition: type of element sending the file syntax: binary number location: Bytes 6-7
Destination Element Identifier	definition: identifier for the element receiving the file syntax: binary number location: Bytes 8-11
Destination Element Type	definition: type of element receiving the file syntax: binary number location: Bytes 12-13

 © ISO/IEC 1999 - All rights reserved

--`,,```,,,,````-`-`,,`,,`,`,,`---

Copyright International Organization for Standardization
Provided by IHS under license with ISO
No reproduction or networking permitted without license from IHS Not for Resale

File Type	definition: type of file being transported syntax: binary number with the following values: *Usage Data* = 0 *erroneous Usage Data* = 1 *test data* = 2 values 3-31 are reserved location: Bits 3-7 of Byte 14
Data Format Language	definition: language used to define the format of the Usage Data contained in the file syntax: binary number with the following values: *Bellcore AMA Format* = 0 *ASN.1* = 1 values 2-7 are reserved location: Bits 0-2 of Byte 14
Suppression Type	definition: type of Usage Data suppressed from each record contained in the file syntax: binary number with the following values: *no suppression* = 0 *source component identifier and type suppressed* = 1 values 2-3 are reserved location: Bits 6-7 of Byte 15
File Priority Level	definition: level of priority associated with file's contents syntax: binary number with the following values: *low* = 0 *medium* = 1 *high* = 2 *critical* = 3 values 4-7 are reserved *location*: Bits 3-5 of Byte 15
Restart Indicator	definition: indicator of the restart of the file sequence number sequence for the source and destination elements syntax: binary number with the following values: *no restart* = 0 *restart* = 1 location: Bit 2 of Byte 15
Transfer Status	definition: status of the transfer of the file to the destination element syntax: binary number with the following values: *not transferred before* = 0 *transferred before* = 1 location: Bit 1 of Byte 15
File Sequence Number	definition: the number of the file within the sequence of files sent between the source element and the destination element

Copyright International Organization for Standardization
Provided by IHS under license with ISO
No reproduction or networking permitted without license from IHS Not for Resale

	syntax: binary number location: Bytes 16-17
Date/Time File Created	definition: date and time the file was created by the source element syntax: grouping of the following subfields (from Internet RFC 1514, *Host Resources MIB*): subfield 1: bytes 18-19, content = year, values = 0..9999 subfield 2: byte 20, content = month, values = 1..12 subfield 3: byte 21, content = day, values = 1..31 subfield 4: byte 22, content = hour, values = 0..23 subfield 5: byte 23, content = minute, values = 0..59 subfield 6: byte 24, content = second, values = 0..60 (use 60 for leap-second) subfield 7: byte 25, content = deci-second, values = 0..9 subfield 8: byte 26, content = direction from UTC, values = "+" or "-" subfield 9: byte 27, content = hours from UTC, values = 0..11 subfield 10: byte 28, content = minutes from UTC, values = 0..59 location: Bytes 18-28
Date/Time File Last Modified	definition: date and time the file was last modified by the source element syntax: grouping of the following subfields (from Internet RFC 1514, *Host Resources MIB*): subfield 1: bytes 29-30, content = year, values = 0..9999 subfield 2: byte 31, content = month, values = 1..12 subfield 3: byte 32, content = day, values = 1..31 subfield 4: byte 33, content = hour, values = 0..23 subfield 5: byte 34, content = minute, values = 0..59 subfield 6: byte 35, content = second, values = 0..60 (use 60 for leap-second) subfield 7: byte 36, content = deci-second, values = 0..9 subfield 8: byte 37, content = direction from UTC, values = "+" or "-" subfield 9: byte 38, content = hours from UTC, values = 0..11 subfield 10: byte 39, content = minutes from UTC, values = 0..59 location: Bytes 29-40
File Size	definition: size of the file in bytes syntax: binary number location: Bytes 41-44
Number of Records in File	definition: number of Usage Data Records in the file syntax: binary number location: Bytes 45-48

 © ISO/IEC 1999 - All rights reserved

--`,,```,,,,````-`-`,,`,,`,`,,`---

Copyright International Organization for Standardization
Provided by IHS under license with ISO
No reproduction or networking permitted without license from IHS

Not for Resale

Some of the header fields (e.g., Data Format Language) may not be relevant to all file types. In cases where fields are not relevant to a particular file, the source element shall fill these fields with zeroes.

10.2.3 Protocol stack

A full protocol stack is used to communicate Usage Data Files over the B-UDTI. This protocol stack is composed of the following protocols, which are shown in Figure 11-11.

- File Transfer Protocol (FTP)
- Transmission Control Protocol (TCP)
- Internet Protocol (IP)
- Layer 1 and 2 protocols supported by communicating systems

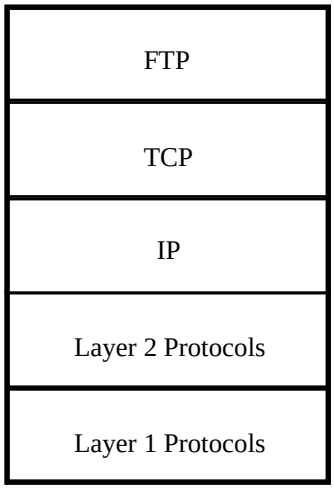

Figure 11-11 — Bulk Usage Data Transfer Interface Protocol stack

10.2.4 FTP Options

Associated with FTP are three file transfer settings, which are used to establish the file transfer environment. These settings and the options that must be used for transferring Usage Data Files are as follows:

- *representation type* - used to indicate the way in which the file is to be represented during the transfer (*ASCII*, *EBCDIC*, *binary*, or *local*). To accommodate ASN.1-based Usage Data Records, the representation type that must be used is *binary*.
- *file structure* - used to indicate if the file is to be treated as a flat file (*file* file structure) or one that has a specific structure (*record* or *page* file structure). Although Usage Data Files do have a specific structure to them (subclause 10.2.1), it is not necessary for the communicating systems to treat these files in a special manner during transfer. Hence, the file structure that must be used is *file*.
- *transfer mode* - used to indicate if the file is to be transferred all at once (*stream* transfer mode) or in pieces with checkpoint messages sent between sections (*block* transfer mode). Since *stream* transfer mode is adequate and supported by all FTP software packages, the transfer mode that must be used is *stream*.

The *ASCII* representation type, *file* file structure and *stream* transfer mode are the default options for the FTP standard (Internet RFC). For the selected options that are defaults (i.e., *file* file structure and *stream* transfer mode), file transfer settings do not need to be explicitly made during the file transfer session. To use the binary representation type, the initiator of the file transfer session must send the “TYPE B” FTP command (often called “type binary” in implementations) to set the representation type to *binary.*

© ISO/IEC 1999 - All rights reserved

Copyright International Organization for Standardization
Provided by IHS under license with ISO
No reproduction or networking permitted without license from IHS Not for Resale

10.2.5 File-naming Conventions

File names are used by a DSM and an ESS to explicitly identify each Usage Data File. Each file name must contain the following name components, separated by a period to enable file-name parsing:

- *source system identifier* - uniquely identifies the sender of the file, in this case a particular DSM. This name component is represented in the file header as **source_identifier**.
- *destination system identifier* - uniquely identifies the receiver of the file, in this case a particular ESS. This name component is represented in the file header as **destination_identifier**.
- *file sequence number* - indicates the number of the file within the sequence of files sent between the source system and destination system. This name component is represented in the file header as **sequence_number**. A sequence number is more useful than a timestamp since a sequence number can be used to detect the loss or misplacement of files.
- *file type* - indicates the type of file being transported between a DSM and an ESS. This file will usually be a Usage Data File, but could also files such as error files (i.e., files with Usage Data Records known or suspected to be erroneous) and test files (i.e., files exchanged to test the interface). This name component is represented in the file header as **file_type**.
- *priority* - indicates the priority level associated with the file. This name component is represented in the file header as **priority_level**.

The source system identifier is necessary to avoid file-name collisions at an ESS, which is expected to receive Usage Record Files from multiple DSMs. The destination system identifier is necessary to avoid file-name collisions at a DSM, which is expected to send Usage Data Files to multiple ESSs. The file sequence number is necessary to avoid file-name collisions at a DSM for files destined for the same destination system and at the ESS for files originated at the same source system. The file type is necessary to enable a requester of a file to efficiently identify and retrieve the desired type of file. The priority is necessary to enable timely transfer of time-sensitive Usage Data to ESSs that must poll for files.

The file sequence number must range from 1 to a maximum number. The maximum number must be large in order to avoid file-name collisions due to sequence number re-use. The maximum file sequence number is 9,999. The sequence number must monotonically increase between 1 and the chosen maximum sequence number, and must return to 1 when the maximum is reached. There must be a sequence number associated with each pair of communicating DSMs and ESSs.

Both the DSM and ESS must keep track of the current file sequence number. DSMs must keep track since they are responsible for assigning file sequence numbers. ESSs must keep track in order to detect missing files and to request the correct file whenever initiating the file transfer.

It is possible that a DSM could lose track of a current file sequence number (e.g., due to a system failure). In this case, the DSM must perform the following file sequence restart procedure:

1. Scan mass storage for existing Usage Data Files and determine existing sequence numbers.

2. Use the first sequence number in the largest block of unused sequence numbers. If no Usage Data Files exist, set the sequence number to 1.

3. Continue following the normal sequence number assignment procedure.

When an ESS receives a Usage Data File that indicates that a file sequence number restart has occurred (via the **restart_indicator** field in the file header), the ESS must adjust its file sequence number accordingly.

It is also possible that an ESS that initiates file transfers could lose track of the current file sequence number. In this case, the ESS must perform the same procedure defined above for DSMs. If no Usage Data Files exist at the ESS, an “out-of-band” mechanism must be used to determine the current file sequence number.

 © ISO/IEC 1999 - All rights reserved

Copyright International Organization for Standardization
Provided by IHS under license with ISO
No reproduction or networking permitted without license from IHS Not for Resale

10.2.6 File Transfer Procedures

This section describes file transfer requirements for initiating transfers, achieving security, determining successful file transfers and recording transfer events.

10.2.6.1 Initiation

FTP enables both the sender and the receiver of a file to initiate the file's transfer, using the STOR command (typically called "put" in implementations) and RETR command (typically called "get" in implementations), respectively. A DSM must support file transfer initiation by a ESS and must be able to initiate file transfers. An ESS must be able to initiate file transfers and must support file transfer initiation by a DSM.

For normal communications between a particular DSM and ESS, either the DSM or ESS could initiate file transfers. The advantage of initiation by the DSM is that it best enables timely delivery of time-sensitive Usage Data in files. The advantage of initiation by the ESS is that it best enables load balancing and the avoidance of overload conditions by allowing the ESS to control when files are transferred.

File transfer initiation could be based on a file transfer schedule (e.g., at 6AM, 12AM, 6PM, 9PM and 12PM), file transfer period (e.g., every 6 hours), amount of Usage Data (e.g., 1 Mbyte, 100 Usage Data Records) and a manual request. A DSM and an ESS must support at least a file transfer schedule, file transfer period or file transfer amount for normal, automated operations. Both systems must support a manual request, which could be used as part of error recovery procedures.

10.2.6.2 Security

FTP supports basic identifier/password security. This level of security could be sufficient if secure networks are used for the transfer of files between DSMs and ESSs. A network could be considered "secure" if it is private and firewalls are used at all points in the network where public traffic could be introduced.

If the network to be used is considered "secure", the file transfer session originator must send a user identifier and password to the session non-originator. The non-originator must perform basic identification and authentication using the received user identifier and password. If the network to be used is not considered "secure", a more robust security mechanism must be employed.

10.2.6.3 Successful Transfer

When the *stream* transfer mode of FTP is used, the logical connection used for transferring the file (called a *data connection*) is closed to indicate the completion of the transfer. It is possible that the data connection could prematurely close (e.g., due to a software failure), thereby giving a false indication of file transfer completion. To determine if a complete Usage Data File was received, an ESS must do the following:

1. Count the number of Usage Data Records in a received Usage Data File.

2. Determine the number of Usage Data Records that the Usage Data File is supposed to contain by recording the value of the **file_records** file header field.

3. Compare the two record counts.

If the counts do not match, the ESS must initiate the transfer of the same file. If the counts match, the ESS can consider the file to be successfully transferred and can begin processing the contained Usage Data Records. Because a file transfer problem could arise, the ESS must not begin processing Usage Data Records contained in a Usage Data File until the file has been successfully transferred.

If the DSM detects that a Usage Data File has only partially been transferred prior to the closing of the data connection, the DSM must wait until the file is requested by the ESS (per the procedure described above).

Copyright International Organization for Standardization
Provided by IHS under license with ISO
No reproduction or networking permitted without license from IHS Not for Resale

When the DSM successfully transmits a *primary* Usage Data File, the DSM must set the status of the file to *secondary* using the **transfer_status** field of the file header.

10.2.6.4 Event Logging

During an FTP file transfer session, FTP commands and replies are exchanged by the communicating systems. To facilitate problem resolution, the DSM and ESS should log the FTP commands and replies sent and received during a file transfer session.

10.2.7 File Storage

Usage Data Files must be stored in mass storage by DSMs. It is vital that this mass storage have sufficient reliability and capacity.

To ensure against loss of Usage Data Records when power outages occur, a DSM's mass storage must be non-volatile (i.e., stored data is maintained during power loss). To ensure against loss of Usage Data Records due to storage failures (e.g., disk head crashes), a DSM's mass storage must be fault tolerant. Fault tolerance could be achieved through techniques such as RAID (redundant arrays of inexpensive disks) and disk mirroring.

To ensure against loss of Usage Data Records due to insufficient mass storage, DSMs must have enough mass storage allocated to Usage Data Files to store at least three busy day's worth of Usage Data Records. Three days' worth of storage is sufficient to ensure that problems that prevent communication between a DSM and an ESS will be resolved before all of the allocated storage fills up with *primary* Usage Data Files (i.e., files that have not yet been transferred to the ESS).

The required amount of storage is dependent on the following factors:

- Number of DSMs.
- Total number of Service Consumers.
- Percentage of subscribers using services during the busy day.
- Size of Usage Data Records.

A DSM's mass storage must be expandable to enable support of growing Usage Data volumes as Service Consumers are added and service usage increases.

A DSM must never overwrite *Primary* Usage Data Files, even when all allocated mass storage is being used for *primary* files and new Usage Data Records are received. In this case, new Usage Data Records must be discarded. To help avoid this situation, a removable interface must be supported by the DSM for use in transporting *primary* Usage Data Files to an ESS when communication problems cause *primary* files to "back up" to a critical level (see subclause 10.2.7).

The DSM must maintain *secondary* Usage Data Files until it is necessary to use the occupied space with new Usage Data Records.

10.2.8 Removable Medium

DSMs must support a removable medium (e.g., diskette) that can be used as a backup mechanism to transport Usage Data Files to an ESS. This mechanism would be used when the two systems cannot communicate and there is a risk of *primary* Usage Data Records being lost due to insufficient remaining mass storage. A removable medium that is supported by both systems must be chosen for this purpose.

When this removable medium is used, the DSM must place entire Usage Data Files onto the medium and update the duplicated file's **transfer_status** to *secondary*. The ESS must be able to read entire Usage Data Files off of the medium and adjust sequence number counts accordingly.

 © ISO/IEC 1999 - All rights reserved

--`,,```,,,,````-`-`,,`,,`,`,,`---

Copyright International Organization for Standardization
Provided by IHS under license with ISO
No reproduction or networking permitted without license from IHS Not for Resale

Bibliography

[1]. ITU Recommendation M.3010: Principles for a Telecommunications Management Network

[2]. ITU Recommendation M.3400: TMN Management Functions

[3]. RFC 1350, *The TFTP Protocol*, Revision 2, 07/1992.

[4]. RFC 1514, *Host Resource MIB.*

[5]. RFC 1902, *Structure of Management Information for version 2 of the Simple Network Management Protocol (SNMPv2).*

[6]. RFC 1903, *Textual Conventions for version 2 of the Simple Network Management Protocol (SNMPv2).*

Copyright International Organization for Standardization
Provided by IHS under license with ISO
No reproduction or networking permitted without license from IHS Not for Resale

ICS 35.040

Price based on 95 pages

© ISO/IEC 1999 – All rights reserved

Copyright International Organization for Standardization
Provided by IHS under license with ISO
No reproduction or networking permitted without license from IHS

Not for Resale