INTERNATIONAL STANDARD

ISO/IEC 16500-4

First edition
1999-12-15

Information technology — Generic digital audio-visual systems —

Part 4: Lower-layer protocols and physical interfaces

Technologies de l'information — Systèmes audiovisuels numériques génériques —

Partie 4: Protocoles et interfaces physiques de la couche inférieure

Reference number
ISO/IEC 16500-4:1999(E)

© ISO/IEC 1999

Copyright International Organization for Standardization
Provided by IHS under license with ISO
No reproduction or networking permitted without license from IHS

Not for Resale

PDF disclaimer

This PDF file may contain embedded typefaces. In accordance with Adobe's licensing policy, this file may be printed or viewed but shall not be edited unless the typefaces which are embedded are licensed to and installed on the computer performing the editing. In downloading this file, parties accept therein the responsibility of not infringing Adobe's licensing policy. The ISO Central Secretariat accepts no liability in this area.

Adobe is a trademark of Adobe Systems Incorporated.

Details of the software products used to create this PDF file can be found in the General Info relative to the file; the PDF-creation parameters were optimized for printing. Every care has been taken to ensure that the file is suitable for use by ISO member bodies. In the unlikely event that a problem relating to it is found, please inform the Central Secretariat at the address given below.

© ISO/IEC 1999

All rights reserved. Unless otherwise specified, no part of this publication may be reproduced or utilized in any form or by any means, electronic or mechanical, including photocopying and microfilm, without permission in writing from either ISO at the address below or ISO's member body in the country of the requester.

ISO copyright office
Case postale 56 • CH-1211 Geneva 20
Tel. + 41 22 749 01 11
Fax + 41 22 734 10 79
E-mail copyright@iso.ch
Web www.iso.ch

Printed in Switzerland

Copyright International Organization for Standardization
Provided by IHS under license with ISO
No reproduction or networking permitted without license from IHS

© ISO/IEC 1999 – All rights reserved

Not for Resale

Contents **Page**

Foreword ..... **vi**
Introduction ..... **vii**
1. Scope **1**
2. Normative references **1**
3. Definitions **3**
4. Acronyms and abbreviations **6**
5. Conventions **8**
6. Tools for Digitizing the Core network **9**
6.1 The Broadband Core network 9
6.2 The Narrowband Core network 9
7. Tools for Digitizing the Access network **10**
7.1 Low-Speed Symmetrical PHY on the PSTN 10
7.2 Low-Speed Symmetrical PHY on the ISDN 10
7.3 Low-Speed Symmetrical PHY on Public Land Mobile Networks 10
7.4 Long-Range Baseband Asymmetrical PHY on copper 11
7.5 Medium-Range Baseband Asymmetrical PHY on copper 11
7.6 Short-Range Baseband Asymmetrical PHY on copper and coax 12
7.6.1 Physical Medium Dependent (PMD) Sublayer Specification 12
7.6.2 Transmission Convergence (TC) PHY Sublayer Specification 34
7.7 Passband Unidirectional PHY on coax 50
7.7.1 Encoding/Decoding Process 50
7.7.2 MPEG-2 Transport Stream 52
7.7.3 Asynchronous Transfer Mode (ATM) Stream 52
7.7.4 Framing structure when carrying MPEG-2-TS 52
7.7.5 Framing structure when carrying ATM 53
7.7.6 High Reliability Marker (HRM) 55
7.7.7 Channel coding 56
7.7.8 Byte to symbol mapping 57
7.7.9 Quadrature Amplitude Modulation (QAM) 58
7.7.10 Baseband filter characteristics 62
7.7.11 Information Bit Rate 64
7.7.12 Coaxial Cable Impedance 64
7.7.13 Media Interface Connector 64
7.7.14 Inband Signaling for the Downstream QAM Link 65
7.8 Passband Bi-directional PHY on coax 70
7.8.1 Downstream Physical Interface Specification 71
7.8.2 Upstream Physical Interface Specification 82

© ISO/IEC 1999 - All rights reserved

Copyright International Organization for Standardization
Provided by IHS under license with ISO
No reproduction or networking permitted without license from IHS Not for Resale

7.8.3 Media Access Control Functionality 89
7.8.4 Minislots 123
7.9 Passband Unidirectional PHY on Satellite 125
7.9.1 Satellite Downstream Transmission Specification 125
7.9.2 Interworking of Satellite and Coax Transmission (Informative) 126
7.10 Passband Bi-directional PHY on MMDS 126
7.10.1 Downstream MMDS 126
7.10.2 Upstream MMDS 145
7.10.3 MAC Protocols and Scenarios 153
7.11 Passband PHY on LMDS 173
7.11.1 Downstream LMDS 173
7.11.2 Upstream LMDS 184
7.11.3 MAC Protocols and Scenarios 190
7.12 Baseband Symmetrical PHY on copper 211
7.13 Baseband Symmetrical PHY on fiber 211
7.14 Passband Unidirectional PHY for Mobile Reception 211
7.14.1 Encoding/Decoding Process 211
8. Network-Interface-Unit to Set-Top-Unit Interface 212
8.1 Introduction to the A0 Interface 212
8.2 Functional Description of the A0 Interface 213
8.3 Capability Levels Required for A0 213
8.3.1 Notes on Requirements for Level “A” A0 Interface 214
8.3.2 Notes on Requirements for Level “B” A0 Interface 214
8.4 Definition of Internal and External A0 Interface 215
8.5 Specification of the Internal A0 (Digital Part) 215
8.5.1 Electrical Specification 216
8.5.2 Physical and Mechanical Connector Specifications 221
8.6 Optional Internal A0 Specification (Analog Pass-Through Part) 221
8.6.1 Electrical Specifications 221
8.6.2 Baseband Analog Video - Digitized Format 222
8.6.3 Baseband Analog Audio - Digitized Format 222
8.7 Optional Internal A0 Specification (Smart Card Bus) 223
8.7.1 Electrical Connections When Not Implementing The Smart Card Bus 223
8.8 Physical Internal NIU Specifications 225
8.8.1 User Replaceable Internal NIU Specifications: 225
8.8.2 Manufacturer Replaceable Internal NIU Specifications: 233
8.9 External A0 Specification (Digital Part) 238
8.9.1 Electrical Specifications 239
8.9.2 Physical and Mechanical Specifications 241
8.10 Optional External A0 Specification (Analog Pass-Through Part) 241

 © ISO/IEC 1999 - All rights reserved

Copyright International Organization for Standardization
Provided by IHS under license with ISO
No reproduction or networking permitted without license from IHS
Not for Resale

9. STU Dataport Interface 241
9.1 Overview of the STU Dataport 241
9.2 STU Multimedia Dataport 241
9.2.1 Physical Specification (PMD) 242
9.2.2 Electrical Specification (PHY) 242
9.2.3 Transmission Convergence Layer Specification (TC) 242
9.3 STU PC Dataport - INFORMATIVE Specification. 242
9.3.1 Physical Specification (PMD) 242
9.3.2 Electrical Specification (PHY) 242
9.3.3 Transmission Convergence Layer Specification (TC) 242
9.4 STU Parallel Dataport - INFORMATIVE Specification 242
10. Tools for digitizing the SPS/SPS core network and SPS internal networks 242

Copyright International Organization for Standardization
Provided by IHS under license with ISO
No reproduction or networking permitted without license from IHS Not for Resale

Foreword

ISO (the International Organization for Standardization) and IEC (the International Electrotechnical Commission) form the specialized system for worldwide standardization. National bodies that are members of ISO or IEC participate in the development of International Standards through technical committees established by the respective organization to deal with particular fields of technical activity. ISO and IEC technical committees collaborate in fields of mutual interest. Other international organizations, governmental and non-governmental, in liaison with ISO and IEC, also take part in the work.

International Standards are drafted in accordance with the rules given in the ISO/IEC Directives, Part 3.

In the field of information technology, ISO and IEC have established a joint technical committee, ISO/IEC JTC 1. Draft International Standards adopted by the joint technical committee are circulated to national bodies for voting. Publication as an International Standard requires approval by at least 75 % of the national bodies casting a vote.

Attention is drawn to the possibility that some of the elements of this part of ISO/IEC 16500 may be the subject of patent rights. ISO and IEC shall not be held responsible for identifying any or all such patent rights.

International Standard ISO/IEC 16500-4 was prepared by DAVIC (Digital Audio-Visual Council) and was adopted, under the PAS procedure, by Joint Technical Committee ISO/IEC JTC 1, *Information technology*, in parallel with its approval by national bodies of ISO and IEC.

ISO/IEC 16500 consists of the following parts, under the general title *Information technology — Generic digital audio-visual systems*:

— *Part 1: System reference models and scenarios*

— *Part 2: System dynamics, scenarios and protocol requirements*

— *Part 3: Contours: Technology domain*

— *Part 4: Lower-layer protocols and physical interfaces*

— *Part 5: High and mid-layer protocols*

— *Part 6: Information representation*

— *Part 7: Basic security tools*

— *Part 8: Management architecture and protocols*

— *Part 9: Usage information protocols*

 © ISO/IEC 1999 - All rights reserved

Copyright International Organization for Standardization
Provided by IHS under license with ISO
No reproduction or networking permitted without license from IHS Not for Resale

Introduction

ISO/IEC 16500 defines the minimum tools and dynamic behavior required by digital audio-visual systems for end-to-end interoperability across countries, applications and services. To achieve this interoperability, it defines the technologies and information flows to be used within and between the major components of generic digital audio-visual systems. Interoperability between these components and between individual sub-systems is assured through specification of tools and specification of dynamic systems behavior at defined reference points. A reference point can comprise one or more logical (non-physical) information-transfer interfaces, and one or more physical signal-transfer interfaces. A logical interface is defined by a set of information flows and associated protocol stacks. A physical interface is an external interface and is fully defined by its physical and electrical characteristics. Accessible reference points are used to determine and demonstrate compliance of a digital audio-visual subsystem with this international standard.

A summary of each part follows.

ISO/IEC 16500-1 (DAVIC 1.3.1a Part 2) defines the normative digital audio-visual systems technical framework. It provides a vocabulary and a Systems Reference Model, which identifies specific functional blocks and information flows, interfaces and reference points.

ISO/IEC 16500-2 (DAVIC 1.3.1a Part 12) defines system dynamic behavior and physical scenarios. It details the locations of the control functional entities along with the normative protocols needed to support the systems behavior. It is structured as a set of protocol walk-throughs, or *"Application Notes"*, that rehearse both the steady state and dynamic operation of the system at relevant reference points using specified protocols. Detailed dynamics are given for the following scenarios: video on demand, switched video broadcast, interactive broadcast, and internet access.

ISO/IEC 16500-3 (DAVIC 1.3.1a Part 14) provides the normative definition of DAVIC Technology Contours. These are strict sets of Applications, Functionalities and Technologies which allow compliance and conformance criteria to be easily specified and assessed. This part of ISO/IEC 16500 contains the full details of two contours. These are the Enhanced Digital Broadcast (EDB) and Interactive Digital Broadcast (IDB). ISO/IEC 16500-3 specifies required technologies and is a mandatory compliance document for contour implementations.

ISO/IEC 16500-4 (DAVIC 1.3.1a Part 8) defines the toolbox of technologies used for lower layer protocols and physical interfaces. The tools specified are those required to digitize signals and information in the Core Network and in the Access Network. Each tool is applicable at one or more of the reference points specified within the Delivery System. In addition a detailed specification is provided of the physical interfaces between the Network Interface Unit and the Set Top Unit and of the physical interfaces used to connect Set Top Boxes to various peripheral devices (digital video recorder, PC, printer). The physical Delivery System mechanisms included are copper pairs, coaxial cable, fiber, HFC, MMDS, LMDS, satellite and terrestrial broadcasting.

ISO/IEC 16500-5 (DAVIC 1.3.1a Part 7) defines the technologies used for high and mid-layer protocols for ISO/IEC 16500 digital audio-visual systems. In particular, this part defines the specific protocol stacks and requirements on protocols at specific interfaces for the content, control and management information flows.

ISO/IEC 16500-6 (DAVIC 1.3.1a Part 9) defines what the user will eventually see and hear and with what quality. It specifies the way in which monomedia and multimedia information types are coded and exchanged. This includes the definition of a virtual machine and a set of APIs to support interoperable exchange of program code. Interoperability of applications is achieved, without specifying the internal design of a set top unit, by a normative Reference Decoder Model which defines specific memory and behavior constraints for content decoding. Separate profiles are defined for different sets of multimedia components.

ISO/IEC 16500-7 (DAVIC 1.3.1a Part 10) defines the interfaces and the security tools required for an ISO/IEC 16500 system implementing security profiles. These tools include security protocols which operate across one or both of the defined conditional access interfaces CA0 and CA1. The interface CA0 is to all security and conditional access functions, including the high speed descrambling functions. The interface CA1 is to a tamper resistant device used for low speed cryptographic processing. This cryptographic processing function is implemented in a smart card.

ISO/IEC 16500-8 (DAVIC 1.3.1a Part 6) specifies the information model used for managing ISO/IEC 16500 systems. In particular, this part defines the managed object classes and their associated characteristics for managing the access network and service-related data in the Delivery System. Where these definitions are taken from existing standards, full reference to the required standards is provided. Otherwise a full description is integrated in the text of this part. Usage-related information model is defined in ISO/IEC 16500-9.

© ISO/IEC 1999 - All rights reserved

--`,,```,,,,````-`-`,,`,,`,`,,`---

Copyright International Organization for Standardization
Provided by IHS under license with ISO
No reproduction or networking permitted without license from IHS
Not for Resale

ISO/IEC 16500-9 (DAVIC 1.3.1a Part 11) specifies the interface requirements and defines the formats for the collection of usage data used for billing, and other business-related operations such as customer profile maintenance. It also specifies the protocols for the transfer of Usage Information into and out of the ISO/IEC 16500 digital audio-visual system. In summary, flows of audio, video and audio-visual works are monitored at defined usage data collection elements (e.g. servers, elements of the Delivery System, set-top boxes). Information concerning these flows is then collected, processed and passed to external systems such as billing or a rights administration society via a standardised usage data transfer interface.

Additional Information

ISO/IEC TR 16501 is an accompanying Technical Report. Further architectural and conformance information is provided in other non-normative parts of DAVIC 1.3.1a (1999). A summary of these documents is included here for information.

ISO/IEC TR 16501 (DAVIC 1.3.1a Part 1) provides a detailed listing of the functionalities required by users and providers of digital audio-visual applications and systems. It introduces the concept of a contour and defines the IDB (Interactive Digital Broadcast) and EDB (Enhanced Digital Broadcast) functionality requirements which are used to define the normative contour technology toolsets provided in ISO/IEC 16500-3.

DAVIC 1.3.1a Parts 3, 4 and 5 are DAVIC technical reports. They provide additional architectural and other information for the server, the delivery-system, and the Service Consumer systems respectively. Part 3 defines how to load an application, once created, onto a server and gives information and guidance on the protocols transmitted from the set-top user to the server, and those used to control the set-up and execution of a selected application. Part 4 provides an overview of Delivery Systems and describes instances of specific DAVIC networked service architectures. These include physical and wireless networks. Non-networked delivery (e.g. local storage physical media like discs, tapes and CD-ROMs) are not specified. Part 5 provides a Service Consumer systems architecture and a description of the DAVIC Set Top reference points defined elsewhere in the normative parts of the specification.

DAVIC 1.3.1a Part 13 is a DAVIC technical report, which provides guidelines on how to validate the systems, technology tools and protocols through conformance and / or interoperability testing.

 © ISO/IEC 1999 - All rights reserved

Copyright International Organization for Standardization
Provided by IHS under license with ISO
No reproduction or networking permitted without license from IHS Not for Resale

Information technology — Generic digital audio-visual systems — Part 4: Lower layer protocols and physical interfaces

1. Scope

This part of ISO/IEC 16500 provides a toolbox consisting of lower layer protocols and physical interfaces. Each tool is applicable at one or more of the reference points within the delivery system. The physical delivery media that have been identified for this version of ISO/IEC 16500-4 are copper pairs, coaxial cable, microwave, fiber and satellite. Removable information carrying physical media (e.g. optical discs and tapes) are not covered. The tools listed address the three parts of the delivery system, namely, the core network, the access network and the access-network-independent interface to the Set Top Unit (STU). Tools are also identified for the STU dataport interface and for a service provider system (SPS) internal network and an SPS/SPS core network.

Clause 6 specifies in detail the tools provided to digitize the physical media in the core network. In the case of a broadband core network, all these tools support high speed ATM transport. Clause 7 specifies in detail the tools provided to digitize the physical media in the access network (copper pairs, coax, satellite, microwave, fiber). All these tools support high speed MPEG-2-TS transport and/or high speed ATM transport. Clause 8 concerns the access-network-independent interface to the STU and provides a detailed specification of the physical interfaces between the network interface unit (NIU) and the STU. This physical interface can be internal or external to the Set Top Box (STB) and is independent from the physical interface used in the access network. It supports the transport of MPEG-2-TS and ATM between NIU and STU. Clause 9 concerns the STU dataport interface and specifies the physical interfaces used to connect an STB to various peripheral devices. It defines normative STU multimedia dataport tools and interfaces and also includes informative specifications for both PC and parallel dataports. These interfaces support the transport of MPEG-2-TS or IP. Clause 10 defines the physical interfaces for interconnections between cascaded SPS entities with or without an intervening core network and the physical interfaces for networks used to connect various hosts within an SPS.

2. Normative references

The following normative documents contain provisions which, through reference in this text, constitute provisions of this part of ISO/IEC 16500. For dated references, subsequent amendments to, or revisions of, any of these publications do not apply. However, parties to agreements based on this part of ISO/IEC 16500 are encouraged to investigate the possibility of applying the most recent editions of the standards indicated below. For undated references, the latest edition of the normative document referred to applies. Members of ISO and IEC maintain registers of currently valid International Standards. The Telecommunication Standardization Bureau (TSB) maintains a list of currently valid ITU-T Recommendations.

2.1 IEC, ISO, ISO/IEC and ITU-T normative references

IEC 60801–4:1988 *Electromagnetic compatibility for industrial process measurement and control equipment. Part 4: Electrical fast transient/burst requirements*

IEC 61883-1:1998, *Consumer audio/video equipment – Digital interface – Part 1: General.*

IEC 61883-4:1998, *Consumer audio/video equipment – Digital interface – Part 4: MPEG-2 TS data transmission.*

ISO/IEC 7816-3:1989, *Identification cards – Integrated circuit(s) cards with contacts – Part 3: Electronic signals and transmission protocols.*

ISO/IEC 8802-3:1996, *Information technology - Telecommunications and information exchange between systems – Local and metropolitan area networks – Specific requirements – Part3: Carrier sense multiple access with collision detection (CSMA/CD) access method and physical layer specifications.*

ISO/IEC 8877: 1987, *Information technology – Telecommunications and information exchange between systems – Interface connector and contact assignments for ISDN Basic Access Interface located at reference points S and T.*

ISO/IEC 11801:1995, *Generic cabling for customer premises, standards for generic cabling for information technology.*

ISO/IEC 13818-1:1996, *Information technology – Generic coding of moving pictures and associated audio information: Systems*

© ISO/IEC 1999 - All rights reserved

Copyright International Organization for Standardization
Provided by IHS under license with ISO
No reproduction or networking permitted without license from IHS Not for Resale

ISO/IEC 13818-9:1996, *Extension for real-time interface for systems decoders*.
ITU General Secretariat, Radio Regulations (1990), Volume 1, Article 8, Frequency Allocations Chapter RR8.
ITU-R Recommendation 656. *Recommendations of the ITU-R (formerly CCIR), 1990 -- CCIR 656*, Part I.
ITU-T Recommendation G.117 [Blue Book], *Transmission aspects of unbalance about earth (definitions and methods)*, version CCITT PA 1988, published March 1990.
ITU-T Recommendation G.652 [Rev. 1], *Characteristics of a single-mode optical fiber cable*, version WTSC 1993, published February 1994.
ITU-T Recommendation G.704 [Rev. 2], *Synchronous frame structures used at levels of 1544, 6312, 2048, 8448 and 44736 kbit/s*, July 95.
ITU-T Recommendation G.707 [Rev. 2], *Synchronous digital hierarchy bit rates*, version WTSC 1993, published August 1993.
ITU-T Recommendation G.708, [Rev. 2*], Network node interface for synchronous digital hierarchy*, version WTSC 1993, published November 1993.
ITU-T Recommendation G.709 [Rev. 2*], Digital transmission systems - Terminal Equipment - General*, version WTSC 1993, published December 1993.
ITU-T Recommendation G.804 [New*], ATM cell mapping into plesiochronous digital hierarchy (PDH)*, version November 1993, published October 1994.
ITU-T Recommendation G.832 (11/1995), *Transport of SDH elements on PDH networks: Frame and multiplexing structures.*
ITU-T Recommendation G.957 (07/1995), *Optical interfaces for equipment and systems relating to the synchronous digital hierarchy*.
ITU-T Recommendation G.981 [New*], PDH optical line systems for the local network*, version January 1994, published November 1994.
ITU-T Recommendation I.361 (11/1995), *B-ISDN ATM layer specification*.
ITU-T Recommendation I.363.5 (08/1996), *B-ISDN ATM adaptation layer (AAL) specification: Type 5 AAL*.
ITU-T Recommendation I.413 [Rev. 1], *B-ISDN user-network interface*, version WTSC 1993, published December 1993.
ITU-T Recommendation I.430 [Rev. 1], *Basic user-network interface - Layer 1 specification*, version WTSC 1993, published March 1994.
ITU-T Recommendation I.432 [Rev. 1], *B-ISDN user-network interface - Physical layer specification*, version WTSC 1993, published January 1994.
ITU-T Recommendation O.9 [Blue Book], *Measuring arrangements to assess the degree of unbalance about earth*, version CCITT PA 1988, published July 1990.
ITU-T Recommendation V.22 [Blue Book], *1200 bits per second duplex modem standardized for use on the general switched telephone network and on point-to-point 2-wire leased telephone-type circuits*, version CCITT PA 1988, published November 1989.
ITU-T Recommendation V.22 bis [Blue Book], *2400 bits per second duplex modem using the frequency division technique standardized for use on the general switched telephone network and on point-to-point 2-wire leased telephone-type circuits*, version CCITT PA 1988, published November 1989.
ITU-T Recommendation V.32 [Rev.1], *A family of 2-wire, duplex modems operating at data signaling rates of up to 9600 bit/s for use on the general switched telephone network and on leased telephone-type circuits*, version WTSC 1993, published January 1994.
ITU-T Recommendation V.32 bis [New], *A duplex modem operating at data signaling rates of up to 14400 bit/s for use on a general switched telephone network and on leased point-to-point 2-wire telephone-type circuits*, version February 1991, published May 1991.
ITU-T Recommendation V.34 [New], *A modem operating at data signaling rates of up to 28800 bit/s for use on the general switched telephone network and on leased point-to-point 2-wire telephone-type circuits*, version September 1994, published December 1994.

2.2 Other normative references

1394 Trade Association, *Specification for AV/C Digital Interface Command Set*, September 13, 1996. Figure 5-1.
ADSL Forum TR-002, *ATM over ADSL Recommendations*, March 1997 http://www.adsl.com/adsl_atm.html.
Scope Note: Sections B.2, 3 (except only a single latency path shall be implemented, see 3.2), 4, 6.2, and 7.
ANSI Standard T1.105, *SONET Basic Description including Multiplex Structure, Rate and Formats.*
ANSI Standard T1.105.01, *SONET Automatic Protection Switching.*
ANSI Standard T1.105.02, *SONET Payload Mappings.*
ANSI Standard T1.105.03, *SONET Jitter and Network Interfaces*.
ANSI Standard T1.105.04, *SONET Data Communication Channel Protocols and Architectures.*
ANSI Standard T1.105.05, *SONET Tandem Connection Maintenance.*

 © ISO/IEC 1999 - All rights reserved

Copyright International Organization for Standardization
Provided by IHS under license with ISO
No reproduction or networking permitted without license from IHS
Not for Resale

ANSI Standard T1.105.06, *SONET Physical Layer Specification.*
ANSI Standard T1.105.07, *SONET Sub STS-1 Interface Rates and Formats Specifications.*
ANSI Standard T1.105.08, *SONET Directory Service for TMN and SONET.*
ANSI Standard T1.105.09, *SONET Timing and Synchronization.*
ANSI Standard T1.413, *Network and customer installation interfaces - Asymmetrical Digital Subscriber Line (ADSL) Metallic Interface*, version March 95.
ATM Forum, *Physical Interface Specification for 25.6 Mbit/s over Twisted Pair Cable*, November 1995.
ATM Forum, *UTOPIA: an ATM-PHY Interface Specification*, Level 1, Version 2.01 March 21,1994.
Bellcore document GR-253 [Issue 02], *Set: Synchronous Optical Network (SONET) Transport; Systems: Common Generic Criteria.* December 1995.
CENELEC EN 50083-9, *Cabled distribution systems for television, sound and interactive multimedia signals. Part 9: Interfaces for CATV/SMATV headends and similar professional equipment for DVB/MPEG-2 transport streams.* March 1997.
DIN Specification 41612-5, *Test Specification*, October 1987.
ETSI specification ETS 300 421, *Digital broadcasting systems for television, sound and data services; Framing structure, channel coding and modulation for 11/12 GHz satellite services*, version December 1994.
ETSI *Technical Report 328 on ADSL*, edition 1, December 1996.
IEEE Standard 1284-1994, *Signaling Method for a Bidirectional Parallel Peripheral Interface for Personal Computers* (ISBN 1-55937-427-6) [SH17335-NXG] (Note: optional in ISO/IEC 16500- see Subclause 9.4 below)
IEEE Standard 1394-1995, *IEEE Standard for a High Performance Serial Bus.*
Philips Semiconductor Specification, *The I^2C-bus and how to use it (including specifications)*, 1995 Update, released April 1995, by Philips Semiconductor. Document number 9398-393-40011.

3. Definitions

This clause defines new terms, and the intended meaning of certain common terms, used in this part of ISO/IEC 16500. Annex A of ISO/IEC 16500-1 defines additional terms and, in some cases, alternative interpretations that are appropriate in other contexts. For convenience, the normative definitions below are included in the annex.

3.1. Access network (AN): a part of the Delivery system consisting of a collection of equipment and infrastructures, that link a number of Service Consumer Systems to the rest of the Delivery system through a single (or a limited number of) common port(s).

3.2. Access node: The element of the Access network containing centralized functions responsible for processing information flows in preparation for transport through the selected distribution network.

3.3. block: a part of a system or parent block that is the container for one or more processes of one block substructure. A block is a scope unit and provides a static interface. When used by itself, block is a synonym for block instance.

3.4. cable modem: a device that interfaces between an A4 reference point and an Hybrid Fiber Coax plant, or between an A0 reference point and that plant, such that the whole comprises a physical layer tool.

3.5. channel: a connection conveying signals between two blocks (the conveyed signals represent information). Channels also convey signals between a block and the environment. Channels may be unidirectional or bi-directional.

3.6. client: a service consuming object or system (block); (a synonym for **user**).

3.7. connect: indicates the connection of a channel to one or more signal routes or the interconnection of signal routes.

3.8. connection: an association of transmission channels or circuits, switching and other functional units set up to provide a means for a transfer of user, control and management information between two or more end points (blocks) in a telecommunications network.

3.9. connection service: provides basic functions to create, maintain, and tear down connections.

3.10. Control Plane (CP): a classification for objects that interact to establish, maintain, and release resources and provide session, transport, and connection control functions that facilitate transparent information transfers between ISP clients.

Copyright International Organization for Standardization
Provided by IHS under license with ISO
No reproduction or networking permitted without license from IHS Not for Resale

3.11. Core network: a portion of the Delivery system composed of networks, systems, equipment and infrastructures, connecting the Service providers to the Access networks.
NOTE: The term Core network, in the DAVIC use, is *wide sense* as it includes the notion of the access networks that are needed to link the Service providers Systems to the core network in strict sense (i.e., exclusive of any access network). This kind of access networks are not under consideration within DAVIC.

3.12. Delivery system (DS): The portion of the DAVIC System that enables the transfer of information between DS-users.

3.13. Distribution network: a collection of equipment and infrastructures that delivers information flows from the Access node to the Network termination elements of the Access network.

3.14. downstream: information flow direction is from an End Service provider System to an End Service Consumer System.

3.15. End-Service Consumer (ESC): a user, either human or machine, whose primary interaction with the system is through the STU.

3.16. End-Service Consumer System (ESCS): A system that (predominantly) consumes information. ESCSs are ISPS and ESPS clients. The ESCS includes the STU and the ESC.

3.17. End-Service provider (ESP): an entity with jurisdiction over a domain that contains a system that (predominantly) provides information to clients.

3.18. End-Service provider System (ESPS): a system that (predominantly) provides information to clients. ESPSs are ISP clients and may also be clients of other ESPSs. ESPSs consists of hardware and software sub-systems that use ISP services to provide video and multimedia services to ESCSs.

3.19. error: An error occurs during the interpretation of a valid specification of a system when one of the dynamic conditions of SDL is violated. Once an error has occurred, the subsequent behavior of the system is not defined.

3.20. interface: a point of demarcation between two blocks through which information flows from one block to the other. See logical and Physical Interface definitions for further details. A DAVIC interface may be physical-interface or a logical-interface.

3.21. interface definition: Interface definitions are the detailed physical definitions used to define the method of interaction between system entities. These definitions are provided for the various reference points. A finite set of interfaces may exist at each particular reference point.

3.22. Intermediate-Service provider (ISP): ISPs provide adjunct services and convey information among ESPs and ESCs.

3.23. layer: a collection of objects of the same hierarchical rank

3.24. logical information flow path: a sequence of information transfers from an initial information source object to a terminal information destination object either directly or through intermediate objects; different physical information may be associated with a logical information flow path segment or with the entire path in different implementations.

3.25. logical interface: an interface where the semantic, syntactic, and symbolic attributes of information flows is defined. Logical interfaces do not define the physical properties of signals used to represent the information. A logical interface can be an internal or external interface. It is defined by a set of information flows and associated protocol stacks.

3.26. Management Plane (MP): a plane that contains those interfaces and functions which support interactions which may be typified as being temporally disjoint from an off-hook interaction. Interactions among Management Plane objects may also occur concurrently with an off-hook interaction.

3.27. management-information: information exchanged by Management Plane objects; may be content-information or control-information.

3.28. network: a collection of interconnected elements that provides connection services to users

3.29. network control function: The Network Control Function is responsible for the error-free receipt and transmission of content flow information to and from the Server.

 © ISO/IEC 1999 - All rights reserved

Copyright International Organization for Standardization
Provided by IHS under license with ISO
No reproduction or networking permitted without license from IHS Not for Resale

3.30. Network Interface Unit (NIU): The NIU accepts network specific content-information flows from the Delivery system and provides a non-network specific interface to the Connectivity Entity in the STU. (additional definitions of the NIU may exist).

3.31. Network Related Control: The Network Related Control entity provides control functions for network configuration, connection establishment and termination and information routing in a network instance of a Delivery system.

3.32. Network termination (NT): the element of the Access network performing the connection between the infrastructure owned by the Access network operator and the Service Consumer System (ownership decoupling). The NT can be passive or active, transparent or not.

3.33. physical information flow path: a channel or a sequence of channels that constitutes a real or virtual connection between an information source object and an information destination object.

3.34. Physical Interface: An interface where the physical characteristics of signals used to represent information and the physical characteristics of channels used to carry the signals are defined. A Physical Interface is an external interface. It is fully defined by its physical and electrical characteristics. Logical information flows map to signal flows that pass through Physical Interfaces.

3.35. plane: a category that identifies a collection of related objects, e.g., objects that execute similar or complementary functions; or peer objects that interact to use or to provide services in a class that reflects authority, capability, or time period. Management-plane service objects, for example, may authorize ISP-clients' access to certain control-plane service objects that in turn may allow the clients to use services provided by certain user-plane objects.

3.36. process: a communicating extended finite state machine. Communication can take place via signals or shared variables. The behavior of a process depends on the order of arrival of signals in its input port

3.37. process instance: an instance of a process created at system creation time or dynamically as a result of a create [request].

3.38. protocol: set of message formats (semantic, syntactic, and symbolic rules) and the rules for message exchange between peer layer entities (which messages are valid when)

3.39. randomization: the process of removing auto-correlation from a signal, i.e. white noise spectrum shaping at the transmitter side to ease symbol or bit timing recovery at the receiver side.

3.40. reference point: a set of interfaces between any two related blocks through which information flows from one block to the other. A reference point comprises one or more logical (non-physical) information-transfer interfaces, *and* one or more physical signal-transfer interfaces.

3.41. S1: content-information flow, from a source to a destination object on the User plane of any service layer.

3.42. S2: control-information flow from a source to a destination object on the Control Plane of the Application Service Layer (SL1).

3.43. S3: control-information flow from a source to a destination object on the Control Plane of the Session and Transport Service Layer (SL2).

3.44. S4: control-information flow from a source to a destination object on the Control Plane of the Network Service Layer (SL3).

3.45. S5: management-information flow from a source to a destination object on the Management Plane of the container object: the objects may be peers (service layer is known), or the service layer may be unspecified.

3.46. scrambling: The process of making a signal unintelligible at the transmission point in order that it can only be received if an appropriate descrambling system is in place at the point of reception. Scrambling can be applied to audio, video or data signals

3.47. server: any service providing system.

3.48. Service provider: an entity that provides a service to a client.

3.49. Service Related Control: an entity that provides all control functions for the services that are offered by a network instance of the Delivery system. The DSRM allows for SL0, SL1 and SL2 Service Related Control subsets.

Copyright International Organization for Standardization
Provided by IHS under license with ISO
No reproduction or networking permitted without license from IHS Not for Resale

3.50. session: an interval during which a logical, mutually agreed correspondence between two objects exists for the transfer of related information. A session defines a relationship between the participating users in a service instance.

3.51. Session Control Function: This entity, in a Service provider System, is responsible for establishing and terminating the environment in which an application will operate. This environment includes the quality of service requirements for both the application and product entities.

3.52. session services: provide basic functions to create, modify, maintain, and tear down sessions (negotiate and allocate network resources).

3.53. signal: an instance of a defined signal type representing information meaningful to a process instance.

3.54. signal route: indicates the flow of signals between a process type and either another process type in the same block or the channels connected to the block.

3.55. specification: a definition of the requirements of a system. A specification consists of general parameters required of the system and the functional specification of its required behavior. Specification may also be used as a shorthand for *specification and/or description*, e.g., in SDL specification or system specification.

3.56. symbol: a bit or a defined sequence of bits.

3.57. system: a collection of interacting objects that serves a useful purpose; typically, a primary subdivision of an object of any size or composition (including domains).

3.58. Time Division Multiple Access (TDMA): method to access a shared transmission medium where time is divided into slots and the nodes connected to the medium are synchronized by assigning each one of them one or more specific time slots to transmit

3.59. transparent information: information that is not significant semantically to an object used to transport the information.

3.60. type: a set of properties for instances. Examples of types in SDL include blocks, processes, services, signals, and systems.

3.61. upstream: information flow direction is from an ESC System to an ESP System.

3.62. user: a service consuming object or system (block).

3.63. User plane (UP): A classification for objects whose principal function is to provide transfer of (end) user information: user information may be user-to-user content (e.g., a movie), or private user-to-user data.

3.64. Value Added Service provider (VASP): This provider offers, for example, a Video-on-Demand Service to the end-user. Within the Systems Reference Model this is the ESP.

3.65. virtual channel: communication channel that provides for the sequential unidirectional transport of ATM cells

4. Acronyms and abbreviations

This clause defines the acronyms and abbreviations used in this part of ISO/IEC 16500. Annex B of ISO/IEC 16500-1 defines acronyms and abbreviations used within ISO/IEC 16500.

ADSL	Asymmetrical Digital Subscriber Line
AII	Active Input Interface
AIS	Alarm Indication Signal
AOI	Active Output Interface
ATM	Asynchronous Transfer Mode
AWG	American Wire Gauge
BER	Bit Error Ratio
BW	Bandwidth
CATV	Community Antenna TeleVision
CBD	Connection Block Descriptor
CMB	CRC Message Block
CRC	Cyclic Redundancy Check
DFP	Downstream Frame Period
DS	Downstream

 © ISO/IEC 1999 - All rights reserved

--`,,```,,,,````-`-`,,`,,`,`,,`---

Copyright International Organization for Standardization
Provided by IHS under license with ISO
No reproduction or networking permitted without license from IHS Not for Resale

EL-FEXT	Equal Level - Far End Cross Talk
ESF	Extended SuperFrame
ETSI	European Telecommunications Standards Institute
FEC	Forward Error Correction
FEXT	Far End Cross Talk
FIFO	First In First Out
FTTB	Fiber To The Building
FTTC	Fiber To The Curb
GSM	Global System for Mobile communications
HDTV	High Definition TeleVision
HEC	Header Error Control
HFC	Hybrid Fiber Coax
HRM	High Reliability Marker
ID	Identification
ISDN	Integrated Services Digital Network
IWU	InterWorking Unit Functionality
LFSR	Linear Feedback Shift Register
LSB	Least Significant Bit
MAC	Media Access Control
MPEG	Moving Pictures Experts Group
MSB	Most Significant Bit
MUX	Multiplex
NIU	Network Interface Unit
NRC	Network Related Control
NRZ	Non-Return-to-Zero
NSAP	Network Service Access Point
OSB	Output Signal Balance
PDH	Plesiochronous Digital Hierarchy
PDU	Packet Data Unit
PHY	Physical Layer Interface
PID	Packet Identifier
PLMN	Public Land Mobile Network
PM	Phase Modulation
PMD	Physical Medium Dependent
PON	Passive Optical Network
POTS	Plain Old Telephone System
PPM	Pulses Per Million
PRBS	Pseudo Random Binary Sequence
PSK	Phase Shift Keying
PSTN	Public Switched Telephone Network
QAM	Quadrature Amplitude Modulation
QoS	Quality of Service
QPSK	Quaternary Phase Shift Keying
RF	Radio Frequency
RL	Return Loss
RS	Reed-Solomon
SDH	Synchronous Digital Hierarchy
SDL	Syntax Description Language
SDU	Service Data Unit
SFP	SuperFrame Period
SFSC	SuperFrame Synchronization Control
SL-ESF	Signaling Link - Extended Superframe
SMATV	Satellite Master Antenna Television
SONET	Synchronous Optical Network
STP	Shielded Twisted Pair
STS	Satellite Transmission System
TC	Transmission Convergence
TDM	Time Division Multiplex
TDMA	Time Division Multiple Access
TE	Terminal Equipment

© ISO/IEC 1999 - All rights reserved

Copyright International Organization for Standardization
Provided by IHS under license with ISO
No reproduction or networking permitted without license from IHS
Not for Resale

TS	Transport Stream
TV	TeleVision
UD	User Data
UNI	User-Network Interface
UPI	User Premises Interface
US	Upstream
UTP	Unshielded Twisted Pair
VDSL	Very high-speed Digital Subscriber Line

5. Conventions

The style of this part of ISO/IEC 16500 follows the *Guide for ITU-T and ISO/IEC JTC 1 cooperation. Appendix II: Rules for presentation of ITU-T | ISO/IEC common text (March 1993).*

 © ISO/IEC 1999 - All rights reserved

--`,,```,,,,````-`-`,,`,,`,`,,`---

Copyright International Organization for Standardization
Provided by IHS under license with ISO
No reproduction or networking permitted without license from IHS Not for Resale

6. Tools for Digitizing the Core network

DAVIC supports physical layer interfaces for both narrowband and broadband core networks.

6.1 The Broadband Core network

For a broadband network, DAVIC supports interfaces for which a mapping of ATM cells has been standardized by international bodies such as ITU, ETSI and the ATM Forum. The ATM Forum makes a distinction between private and public UNI interfaces. For the broadband core network, only public UNI interfaces are considered. The allowable physical layer protocols for the broadband core network are given in detail below.
The recommendation to support SDH/SONET as the broadband core network physical layer may be viewed as offering a single solution. A near-term option of PDH is presented to accommodate for legacy networks; and a recommendation is given to review the applicability of PDH as a physical layer option for this part of ISO/IEC 16500 upon future revisions.
Though many Physical Interfaces exist that are able to carry ATM cells, it is important to limit the number of possible interfaces to prevent requirements that servers have to be equipped with a wide variety of Physical Interfaces. At the moment PDH plays an important role in transport networks and therefore PDH can not be ruled out for short term deployment of DAVIC services. This is because network operators who will be transporting DAVIC specified services will not be able to avoid using multiple physical layer technologies for the time being. However in the long term PDH equipment will be replaced, e.g. by SDH or SONET transmission equipment. The broadband core network shall be digitized by transporting ATM on one or more of the tools listed in Table 6-1. Each of these tools shall comply to the corresponding references listed in Table 6-1.

Table 6-1 - Broadband Core network Physical Interfaces.

Physical Interface		Bit Rate	References
SDH	STM-1	155.52 Mbit/s	[ITU-T G.652], [ITU-T G.957], [ITU-T G.707], [ITU-T G.708], [ITU-T G.709] [ITU-T I.413], [ITU-T I.432]
	STM-4	622.08 Mbit/s	[ITU-T G.652], [ITU-T G.957], [ITU-T G.707], [ITU-T G.708], [ITU-T G.709], [ITU-T I.413], [ITU-T I.432]
SONET	OC-3c	155.52 Mbit/s	[ANSI T1.105], [ANSI T1.105.01] through [ANSI T1.105.09] [BELLCORE GR-253]
	OC-12	622.08 Mbit/s	[ANSI T1.105], [ANSI T1.105.01] through [ANSI T1.105.09] [BELLCORE GR-253]
PDH	J2	6.312 Mbit/s	[ITU-T G.981], [ITU-T G.704], [ITU-T G.804]
	E3	34.368 Mbit/s	[ITU-T G.981], [ITU-T G.832], [ITU-T G.804]
	DS3	44.736 Mbit/s	[ITU-T G.981], [ITU-T G.804]
	E4	139.264 Mbit/s	[ITU-T G.981], [ITU-T G.832], [ITU-T G804]

Part 4 specifies an enhanced broadcast scenario where the core network between the downstream delivery network and the originating SPS may not exist (i.e. A9 and A4 are coincident), In this case, DVB ASI shall be used for delivering the MPEG-2 Transport Stream from the SPS into the access network.

Table 6-2 - SPS/SPS core network and SPS internal network interfaces.

Physical Interface		Bit Rate	References
DVB	ASI	270 Mbit/s	[CENELEC EN50083-9]

6.2 The Narrowband Core network

A characteristic of Enhanced Broadcast Services is that a different delivery systems may be used for carrying the downstream broadcast signal and the interaction channel. The downstream broadcast may use a broadband core network, while the interaction channel may use a narrowband core network. In that case, carrying ATM is not mandatory for the interaction channel. DAVIC supports PSTN, ISDN and PLMN as physical layer tools for use in

Copyright International Organization for Standardization
Provided by IHS under license with ISO
No reproduction or networking permitted without license from IHS Not for Resale

a narrowband core network as listed in Table 6-3. These tools shall be the same as those defined for digitizing the access network in subclauses 7.1, 7.2, and 7.3, respectively.

Table 6-3 - Narrowband Core network Physical Interfaces.

Physical Interface		Bit Rate	References
PSTN	modem interface	2.4 bit/s 9.6 kbit/s 14.4 kbit/s 28.8 kbit/s	[ITU-T V22bis] [ITU-T V32] [ITU-T V32bis] [ITU-T V34]
ISDN	ISDN interface	144 kbit/s	[ITU-T I.430]
PLMN	mobile interface	1.2 kbit/s 2.4 kbit/s 4.8 kbit/s 9.6 kbit/s	[ITU-T V22] [ITU-T V22bis] [ITU-T V32] [ITU-T V32]

7. Tools for Digitizing the Access network

7.1 Low-Speed Symmetrical PHY on the PSTN

The PSTN is considered as a physical medium, a physical layer interface and a network which can be used to establish a bi-directional communication path in the end-to-end delivery system by making use of a modem.
Transmission performance levels are defined as follows:

1) Full duplex terrestrial path at up to 2.4 kbits/s
2) Full duplex terrestrial path at up to 9.6 kbit/s
3) Full duplex terrestrial path at up to 14.4 kbits/s
4) Full duplex terrestrial path at up to 28.8 kbits/s

The performance level 1 shall comply with [ITU-T V22 bis].
The performance level 2 shall comply with [ITU-T V32].
The performance level 3 shall comply with [ITU-T V32 bis].
The performance level 4 shall comply with [ITU-T V34].
The modem in the set top box shall at least support the auto mode selection [ITU-T V.22bis] transmission protocol (performance level 1).
Independently of the performance level the modem is operating at, asynchronous working with one or two stop bits and with or without parity shall be possible.

7.2 Low-Speed Symmetrical PHY on the ISDN

The ISDN is considered as a physical medium, a physical layer interface and a network which can be used to establish a bi-directional communication path in the end-to-end delivery system.
The ISDN interface shall comply to the [ITU-T I.430] specification.

7.3 Low-Speed Symmetrical PHY on Public Land Mobile Networks

The public land mobile network (PLMN) is considered as a physical medium, a physical layer interface and a network which can be used to establish a bi-directional communication path in the end-to-end delivery system by making use of a mobile terminal equipment, radio network, interworking functionality and PSTN/ISDN network. The type of the mobile network depends on the local mobile network operator. For example, GSM, PCS 1900, or DCS 1800 can be used according to the respective standards.
ISDN access from the PLMN provides faster connection establishment than PSTN access from the PLMN.

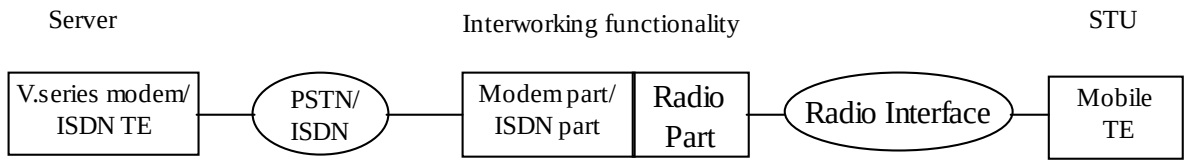

Figure 7.3-1 - Public Land Mobile Network (PLMN) PSTN/ISDN interworking for circuit switched calls

 © ISO/IEC 1999 - All rights reserved

Copyright International Organization for Standardization
Provided by IHS under license with ISO
No reproduction or networking permitted without license from IHS
Not for Resale

Transmission performance levels are defined as follows:

1) Full duplex terrestrial path at up to 1.2 kbits/s
2) Full duplex terrestrial path at up to 2.4 kbits/s
3) Full duplex terrestrial path at up to 4.8 kbits/s
4) Full duplex terrestrial path at up to 9.6 kbits/s

The performance level 1 shall comply with [ITU-T V22].
The performance level 2 shall comply with [ITU-T V22bis].
The performance level 3 shall comply with [ITU-T V32].
The performance level 4 shall comply with [ITU-T V32].
The Interworking functionality shall at least support the auto mode selection [ITU-T V22] transmission protocol (performance level 1). Independently of the performance level the interworking functionality is operating at, asynchronous working with one or two stop bits and with or without parity shall be possible.
In case of ISDN, the ISDN interface in the interworking functionality shall comply to the [ITU-T I.430] specification.
In the radio interface, the non-transparent data transmission (including error correction) is recommended, because it provides a better BER performance on the radio path, and it does not require an additional protocol to carry out the error correction.
For the GSM networks the IWU is specified in ETSI GSM standards, (e.g. GSM 09.07 ver 3.7.1 General Requirements on Interworking between PLMN and the ISDN or PSTN).

7.4 Long-Range Baseband Asymmetrical PHY on copper

This Physical Layer Interface specification supports transmission over long range (>1500 meters) unshielded twisted pair (UTP) cabling at bit rates up to 7 Mbit/s in the downstream direction and up to 640 kbit/s in the upstream direction.
Work on a long-range asymmetrical physical layer interface on copper pairs has been completed in the ANSI T1E1.4 and ETSI TM3. It is referred to as ADSL (Asymmetrical Digital Subscriber Line).
The Long-Range Asymmetrical Physical Layer Interface on copper pairs shall comply to the [ANSI T1.413] ADSL specification and additionally meet the performance requirements contained in the ETSI Technical Report [ETR 328].
The bit rate and interleaving depth shall be set at start-up according to the network operators service requirements by network management (reference [ANSI T1.413] section 12 “Initialization” sub-section 12.6.2 “C-RATES1”).
The ATM transmission convergence layer specifications shall be implemented according to ADSL Forum recommendations described in [ADSLF TR-002], with the following restrictions:

1 Only the following sections of [ADSLF TR-002] are mandatory (as restricted in 2 below), other text is informative:
- B.2 Relationship to other reference models: DAVIC
- 3 Transport of ATM on ADSL
- 4 Quality of Service
- 6.2 Description of functional blocks: Transmission Convergence
- 7 Management

2 In ISO/IEC 16500 only a single latency path shall be implemented. This is a restriction on the full flexibility of the [ADSLF TR-002] recommendation subclause 3.2.

7.5 Medium-Range Baseband Asymmetrical PHY on copper

This section is included for information only.
See DAVIC 1.3.1a Part 4 (1999) for more details on architectures able to support the Medium Range Baseband Asymmetrical PHY on copper.

© ISO/IEC 1999 - All rights reserved

Copyright International Organization for Standardization
Provided by IHS under license with ISO
No reproduction or networking permitted without license from IHS
Not for Resale

7.6 Short-Range Baseband Asymmetrical PHY on copper and coax

This Physical Layer Interface supports transmission over short range (<300 meters) unshielded copper pairs, shielded copper pairs and coaxial cable (up to 40 MHz bandwidth), partly located in the outside distribution plant, partly located inside the premises. It is referred to as FTTB or FTTC (Fiber To The Building or Fiber To The Curb).
The PMD sublayer section specifies the electrical characteristics of the physical medium (e.g. propagation loss, crosstalk, impedance matching), the modulation schemes and reference loops over which this PHY is operating. The physical medium can be a copper pair, a coax or a combination of both and connects the network device to one or more user devices in a point-to-multipoint environment, as shown in Figure 7.6-1.
The TC sublayer section specifies the framing of downstream and upstream ATM cells (e.g. forward error correction, transport frame synchronization, network device to user device lower layer protocols and upstream TDMA control).

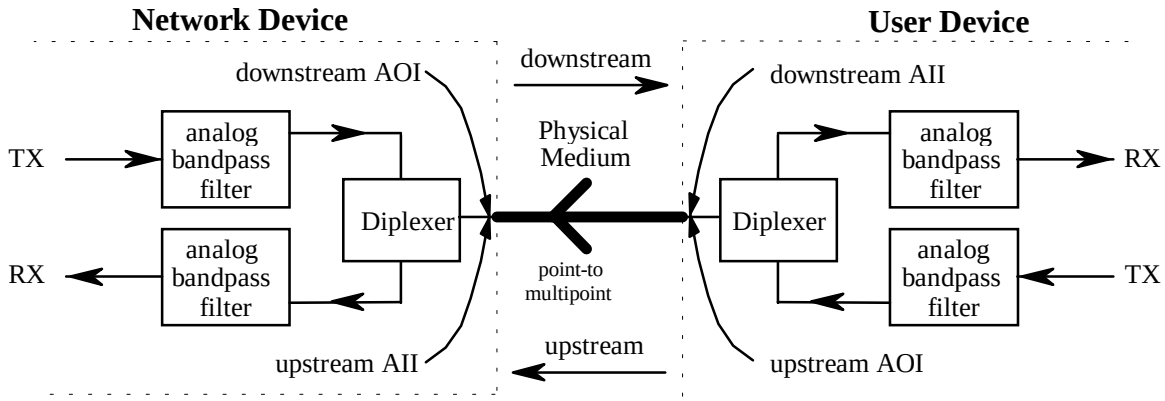

Figure 7.6-1 - Definition of active interfaces in the network and user device.

The PMD and TC sublayer sections specify the characteristics of the Network Device and the User device at the Active Input and Output Interfaces as shown in Figure 7.6-1. The network device shall be the device generating the downstream signal, typically located in the optical network termination (in the access network). The user device shall be the device generating the upstream signal, typically located in the Network Interface Unit (in the set top box).
On the physical medium, other signals can be carried in overlay (e.g. POTS or RF signals). The signal splitter/combiners to overlay these signals on the physical medium shall not considered as part of the Network Device, nor as part of the User Device. They shall not affect compliance of the short-range baseband asymmetrical PHY signal to the PMD and TC sublayer specification.

7.6.1 Physical Medium Dependent (PMD) Sublayer Specification

7.6.1.1 Bit Rates

Bit Rate (data rate) refers to the logical bit rate for data (expressed in Mbit/s). Encoded line rate (symbol rate) refers to the modulation rate of the electrical signal on the media (expressed in Mbaud).
The downstream and upstream bit rate are scaleable. The downstream and upstream bit rate shall correspond to one of the valid bit rate combinations shown in Table 7-1.

Table 7-1 - Valid downstream and upstream bit rate combinations.

Bit Rate	Downstream	Upstream
A	51.84 Mbit/s	19.44 Mbit/s
B	51.84 Mbit/s	1.62 Mbit/s
C	25.92 Mbit/s	1.62 Mbit/s
D	12.96 Mbit/s	1.62 Mbit/s

 © ISO/IEC 1999 - All rights reserved

Copyright International Organization for Standardization
Provided by IHS under license with ISO
No reproduction or networking permitted without license from IHS
Not for Resale

All bit rate combinations shall use the same downstream and upstream TC layer frame format (downstream and upstream). The network device shall transmit downstream frames at the downstream bit rate as defined in Table 7-1. The user device shall transmit upstream frames at the upstream bit rate as defined in Table 7-1.
The network device shall support at least one of the bit rate settings A, B, C or D.
The network device shall support connection to copper pair or coax, as required by a particular access network wiring.
A user device shall support the A+B+C+D or B+C+D or C+D or D bit rate setting(s). This assures a level of portability of user devices between areas where different bit rate settings are being used by the network devices and is in line with common modem practice, where a modem also supports all the bit rate setting lower than its maximum performance.
A user device shall support connection to copper pair or coax, as required by a particular in-premises wiring.
For profiles with the option of having the upstream signal in the lower frequencies or having the upstream signal in the higher frequencies (i.e. B, C and D), the user device shall support both upstream signal transmissions, while the network device can choose to support upstream reception in the lower or higher frequencies. It is the responsibility of the user device to determine how to transmit upstream properly.

7.6.1.2 Bit Error Rate

The user device received white noise random bit error rate after error correction shall be lower than 10^{-12}. With this assumption, a 10 Mbit/s downstream stream flow will be corrupted less than once a day, which is considered to be acceptable for interactive multimedia services.
The network device received white noise random bit error rate after error correction shall be less than 10^{-10}. With this assumption, a 100 kbit/s upstream data stream will be corrupted less than once a day, which is considered to be acceptable for interactive multimedia services.
The network device is receiving bursty data from the various user devices connected to it. If the network device cannot receive a burst (e.g. because of burst synchronization acquisition failure), the data will be completely corrupted and the ATM cell is lost.
The network device upstream burst loss under white noise conditions shall be less than 10^{-9}. This is in line with the cell loss ratio commonly used for ATM networks.

7.6.1.3 Timing

The transmitter in the network device shall use a transmit clock which is derived from the network clock (e.g. SONET clock, SDH clock, PON clock, ...) to allow end-to-end network synchronization. In the absence of a network clock, the network device shall use a locally generated clock with a maximum tolerance of 50 ppm.
The transmitter in the user device shall use a transmit clock which is derived from its received data clock, i.e. the user device is loop timed. In the absence of a valid clock derived from the received data clock, the user device shall not perform any upstream access on the media.

7.6.1.4 Jitter

The jitter of the network device (downstream jitter τ_D) transmitter shall be obtained by continuously transmitting the symbol (b0b1b2b3=0111) (see Figure 7.6-4) at the output of the byte-to-symbol mapping and measure the variation of the zero-crossings of the resulting sine-waveform (as shown in Figure 7.6-2) at the network device active output interface. For the network device jitter measurement, the network device transmitter clock shall be used as the reference clock.
The jitter of the user device transmitter (upstream jitter τ_U) shall be obtained by continuously transmitting the symbol (b1b0=11) (see Figure 7.6-11) output of the byte-to-symbol mapping and measure the variation of the zero-crossings of the resulting sine-waveform (as shown in Figure 7.6-2) at the user device active output interface. For the user device jitter measurement, the network device transmitter clock shall be used as the reference clock.

Copyright International Organization for Standardization
Provided by IHS under license with ISO
No reproduction or networking permitted without license from IHS Not for Resale

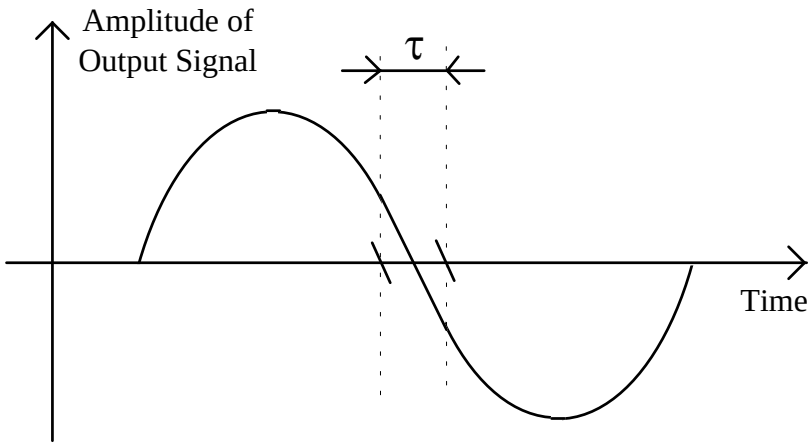

Figure 7.6-2 - Illustration of Transmission Jitter.

The network device transmitter shall be capable of continuously transmitting the symbol (b3b2b1b0=0111), as observed at the output of the byte-to-symbol mapping.
The user device transmitter shall be capable of continuously transmitting the symbol (b1b0=11), as observed at the output of the byte-to-symbol mapping.
The network device and user device jitter shall be less than the maximum values shown in Table 7-2. All the jitter values shall be peak-to-peak values at frequencies above 1 kHz.

Table 7-2 - Maximum peak-to-peak jitter values.

Bit rate setting	Downstream jitter	Upstream Jitter
A	1.5 ns	2.0 ns
B	1.5 ns	2.0 ns
C	3.0 ns	4.0 ns
D	6.0 ns	8.0 ns

7.6.1.5 Downstream Modulation

This PMD sublayer specification provides bit transmission capability and bit timing in the downstream direction (from the network device to any user device).
The sublayer includes functions to generate and receive waveforms suitable for the media, and the insertion and extraction of symbol timing information. The implementation of the PMD sublayer receives a byte stream from the TC sublayer, encodes, and transmits the signal to the adjacent PMD sublayer. The receiving implementation of the PMD sublayer decodes the signal and delivers it as a byte stream to the TC sublayer. These operations are described below.

7.6.1.5.1 Transmit functionality

The PMD sublayer shall be comprised of transmit functionality obtained from the blocks shown in Figure 7.6-3. Any implementation that produces the same functional behavior at the network device Active Output Interface is equally valid. The transmit function encodes the byte stream received from the TC layer into an equivalent encoded symbol stream and then into a modulated signal for presentation to the media at the network device Active Output Interface.

 © ISO/IEC 1999 - All rights reserved

--`,,```,,,,````-`-`,,`,,`,`,,`---

Copyright International Organization for Standardization
Provided by IHS under license with ISO
No reproduction or networking permitted without license from IHS
Not for Resale

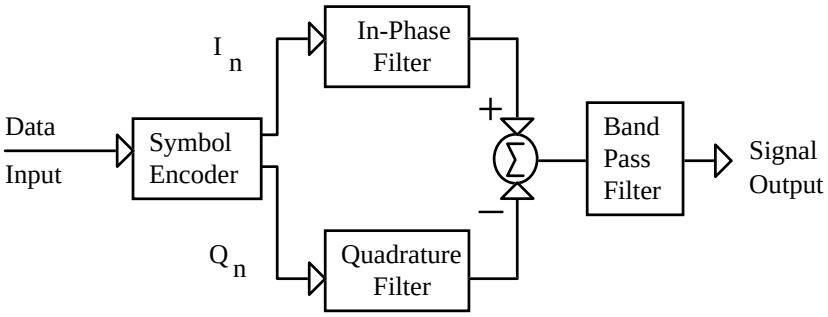

Figure 7.6-3 - Block diagram of digital transmitter functionality.

The symbol stream from the encoder is divided into two paths, I_n and Q_n, where n designates the nth symbol period. The two symbol streams are sent to passband in-phase and quadrature shaping filters, respectively. The output of the in-phase filter and the negative of the output of the quadrature filter are summed into a single signal, the result passed through a band-pass filter, and then transmitted onto the media.

7.6.1.5.2 Encoding

The amplitudes of the I_n and Q_n components in the constellations shall maintain the relative values 1 and 3, with a tolerance of ±0.06 relative to these values, as depicted in the constellation diagram of Figure 7.6-5.
For operation at 51.84 Mbit/s, the encoding used shall be the code in Figure 7.6-4 with a symbol rate equal to 12.96 Mbaud.
For operation at 25.92 Mbit/s, the encoding used shall be the code in Figure 7.6-4 with a symbol rate equal to 6.48 Mbaud.
For operation at 12.96 Mbit/s, the encoding used shall be the code in Figure 7.6-4 with a symbol rate equal to 3.24 Mbaud.
The encoder shall map four data bits into a symbol as shown in Figure 7.6-4. Bytes shall be mapped from the TC layer into two four bit symbols. The first bit out of the TC layer into a given symbol shall be b0.

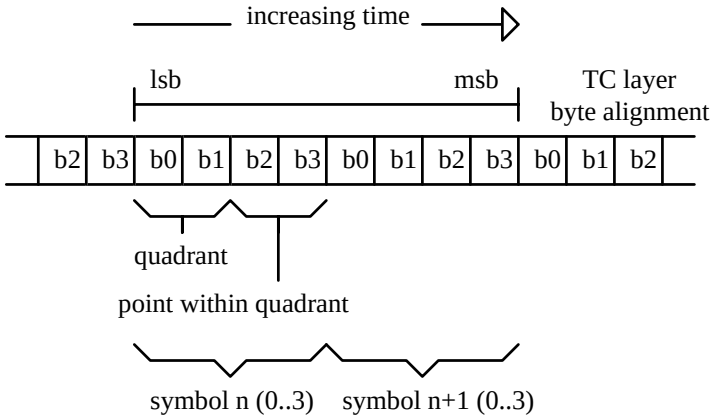

Figure 7.6-4 - Byte-to-symbol mapping

The signal constellation shall be as shown in Figure 7.6-5.
Each incoming group of 4 bits b(0..3) shall be differentially encoded into a symbol. The relative levels of the amplitude of the symbols in each dimension shall be proportional to the four different levels, ±1 and ±3. The differential encoding shall be done by first determining the current state as a function of the past state and bits b0 and b1. Once the current state is obtained, the output symbols In and Qn shall be generated from the current state and bits b2 and b3. Symbol generation shall be as shown in Table 7-3.

--`,,```,,,,````-`-`,,`,,`,`,,`---

Copyright International Organization for Standardization
Provided by IHS under license with ISO
No reproduction or networking permitted without license from IHS Not for Resale

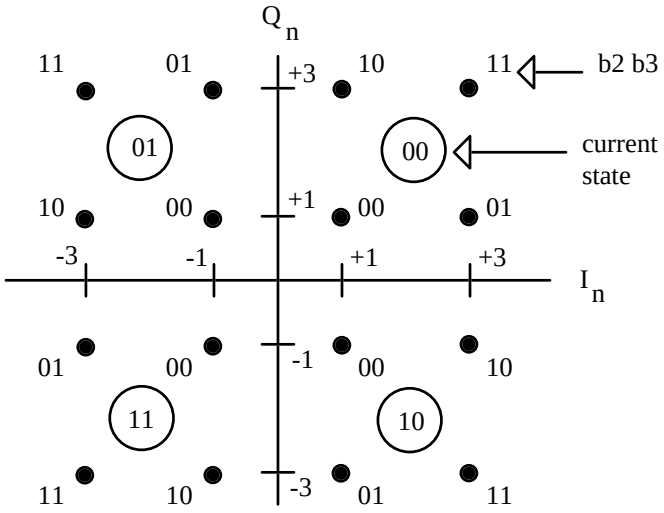

Figure 7.6-5 - Signal constellation.

Table 7-3 - State diagram for differential encoding.

b0 b1	previous state	current state and phase rotation	
00	00	01	+ π/2
00	01	11	+ π/2
00	10	00	+ π/2
00	11	10	+ π/2
01	00	00	+ 0
01	01	01	+ 0
01	10	10	+ 0
01	11	11	+ 0

b0 b1	previous state	current state and phase rotation	
10	00	11	+ π
10	01	10	+ π
10	10	01	+ π
10	11	00	+ π
11	00	10	+ 3π/2
11	01	00	+ 3π/2
11	10	11	+ 3π/2
11	11	01	+ 3π/2

7.6.1.5.3 Network Device Active Output Interface

This section specifies the

- impulse response for the transmit filters
- transmitted signal power spectrum
- transmitter signal power level
- transmitter return loss
- transmitter signal balance

7.6.1.5.3.1 Impulse Response for the Transmit Filters

The time-domain response of a square-root raised-cosine pulse with excess bandwidth parameter α is given by:

$$g(t) = \frac{\sin[\frac{\pi t}{T}(1-\alpha)] + \frac{4\alpha t}{T}\cos[\frac{\pi t}{T}(1+\alpha)]}{\frac{\pi t}{T}[1-(\frac{4\alpha t}{T})^2]}$$

The impulse response of the in-phase and quadrature filters shall have an excess bandwidth of α =0.2. The square-root raised-cosine pulse response shall therefore be defined as (Figure 7.6-6):

 © ISO/IEC 1999 - All rights reserved

--`,,```,,,,````-`-`,,`,,`,`,,`---

Copyright International Organization for Standardization
Provided by IHS under license with ISO
No reproduction or networking permitted without license from IHS
Not for Resale

$$g(t) = \frac{\sin(\pi\frac{4t}{5T}) + (\frac{4t}{5T})\cos(\pi\frac{6t}{5T})}{(\pi\frac{t}{T})[1-(\frac{4t}{5T})^2]},$$

where T is the symbol period.

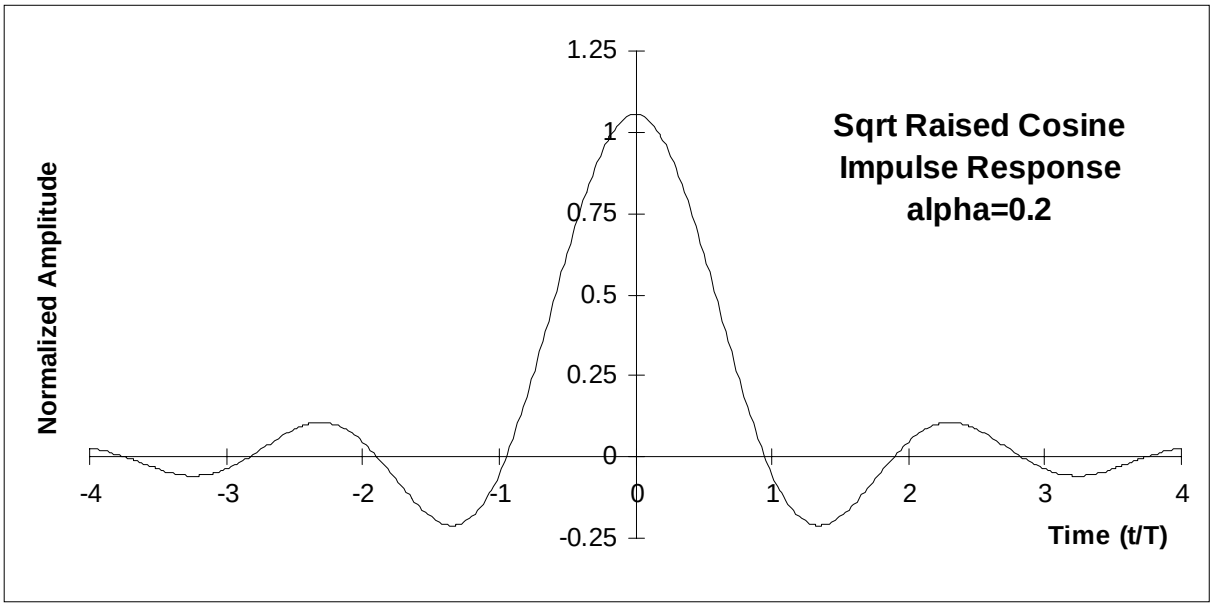

Figure 7.6-6 - Sqrt Raised Cosine Impulse Response g(t) of the transmit filters.

The in-phase filter impulse response shall be defined as

$$f(t) = g(t) \bullet \cos(2\pi f_c t)$$

and the quadrature filter impulse shall be defined as

$$f'(t) = g(t) \bullet \sin(2\pi f_c t)$$

where T is the symbol period ($T=1/f_s$), and f_c the modulator's center frequency.
The output signal shall be defined as

$$S(t) = \sum_n [I_n \bullet f(t-nT) - Q_n \bullet f'(t-nT)]$$

with I_n and Q_n equal to ±1 or ±3, independently from each other.
The in-phase and quadrature impulse response of the transmit filters are shown in Figure 7.6-7.

--`,,```,,,,````-`-`,,`,,`,`,,`---

Copyright International Organization for Standardization
Provided by IHS under license with ISO
No reproduction or networking permitted without license from IHS Not for Resale

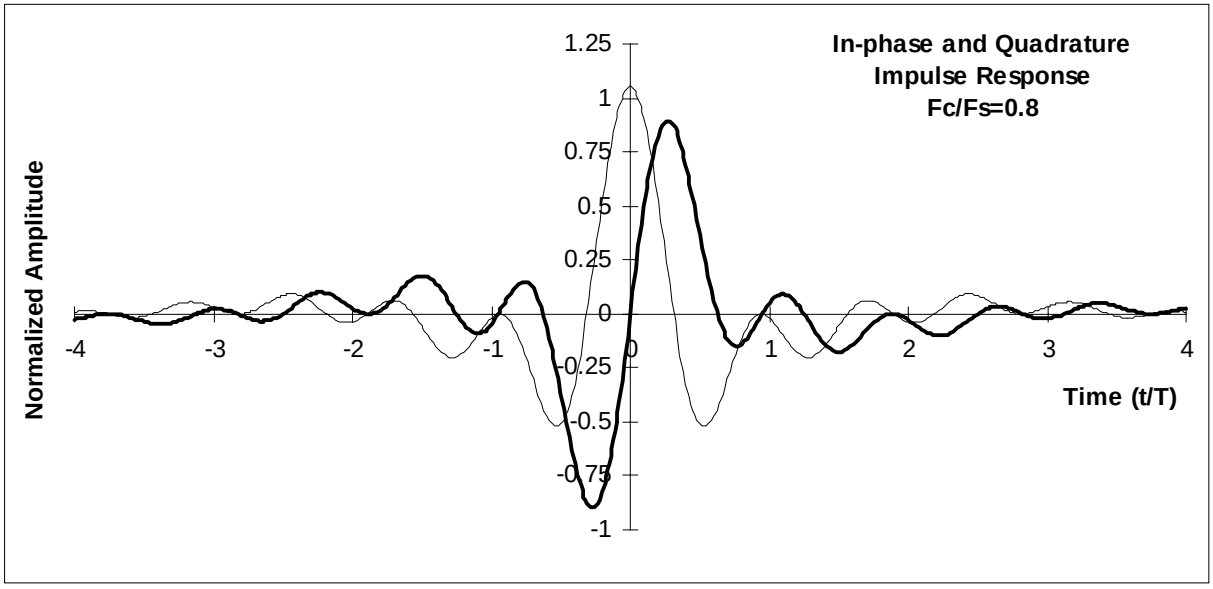

Figure 7.6-7 - In-phase and Quadrature Impulse Response of the transmit filters (example for 51.84 Mbit/s downstream bit rate with f_c/f_s=0.8).

Because of the transmit filters' impulse response being an infinite time response (finite bandwidth), the actual impulse responses of the transmitter will be an approximation of the above equations over a fixed interval. For a 20% excess bandwidth system, a filter span of [-4T,+4T] (informative value) can be considered adequate (32 taps filter in a 4 times oversampling implementation).

7.6.1.5.3.2 Transmitted Signal Power Spectrum

The Network Device Active Output interface shall have a power spectrum equivalent to the square root of a raised-cosine shaping with symbol frequency f_s, center frequency f_c. and 20% excess bandwidth.
The symbol frequency and the center frequency depend upon the bit rate setting and shall comply to the values in Table 7-4.

Table 7-4 - Downstream spectrum allocation.

Bit rate setting	Downstream						
	Bit rate *Mbit/s*	Symbol rate f_s	Lowest freq. f_l	Center freq. f_c	Highest freq. F_h	c/s ratio f_c / f_s	roll-off α
A	51.84	12.96	11.6640	19.4400	27.2160	1.50	0.20
B	51.84	12.96	2.5920	10.3680	18.1440	0.80	0.20
C	25.92	6.48	2.5920	6.4800	10.3680	1.00	0.20
D	12.96	3.24	2.5920	4.5360	6.4800	1.40	0.20

The transmitted signal power spectrum, as measured at the Active Output Interface of the network device, shall meet the power spectrum template (as defined in Table 7-5) with lower and upper limits for attenuation at several points in the downstream signal bandwidth (as defined in Table 7-4). In-between these points, linear interpolation shall be applied.
The power spectrum template puts requirements on the implementation accuracy of the square-root raised cosine 20% roll-off filters and the analog filtering. The power spectrum template is defined as a function of the normalized frequency x,
where

 © ISO/IEC 1999 - All rights reserved

Copyright International Organization for Standardization
Provided by IHS under license with ISO
No reproduction or networking permitted without license from IHS
Not for Resale

$$x = \frac{f - f_c}{f_s / 2}$$

Table 7-5 - Downstream power spectrum template.

Normalized frequency x	Spectral Lower Bound	Theoretical Value	Spectral Upper Bound
≤ -1-5α/2	NA	NA	-50 dB
-1-2α	NA	NA	-40 dB
-1-3α/2	NA	NA	-40 dB
-1-α	NA	NA	-30 dB
-1-α/2	-10.0 dB	-8.3 dB	-7.0 dB
-1	-4.0 dB	-3.0 dB	-2.0 dB
-1+α/2	-1.7 dB	-0.7 dB	+0.3 dB
-1+α	-1.0 dB	0 dB	+1.0 dB
0	-1.0 dB	0 dB	+1.0 dB
+1-α	-1.0 dB	0 dB	+1.0 dB
+1-α/2	-1.7 dB	-0.7 dB	+0.3 dB
+1	-4.0 dB	-3.0 dB	-2.0 dB
+1+α/2	-10 dB	-8.3 dB	-7.0 dB
+1+α	NA	NA	-30 dB
+1+3α/2	NA	NA	-40 dB
+1+2α	NA	NA	-40 dB
≥ +1+5α/2	NA	NA	-50 dB

Note: NA means the value is not applicable.

The group delay distortion seen at the Active Output Interface, which is introduced on the downstream signal by the network device analog output stage, shall be lower than 1/2 symbol period. This assumes that the delay distortion is attributed to the analog filters only.

7.6.1.5.3.3 Transmitted Signal Power Level

A minimum and a maximum network device output power is defined.
The network device total output power spectrum density, measured over the spectrum mask defined in Table 7-4, shall be lower than the maximum value of +15dBm.
The network device total output power spectrum density, measured over the spectrum mask defined in Table 7-4, shall be higher than the minimum value of -15dBm.
If the network device is driving copper pairs, the test load shall consist of a single 110 Ω±0.2% resistor. For frequencies less than 100 MHz, the series inductance of the resistor shall be less than 20nH and the parallel capacitance shall be less than 2pF.
If the network device is driving coax, the test load shall consist of a single 75Ω±0.2% resistor. For frequencies less than 100 MHz, the series inductance of the resistor shall be less than 20nH and the parallel capacitance shall be less than 2pF.

7.6.1.5.3.4 Transmitter Return Loss

The Active Output Interface Return Loss specifies the amount of differential signal incident (for copper pair and coax) upon the AOI that is reflected.

$$RL = 20\log\left|\frac{Z_L + Z_C}{Z_L - Z_C}\right|,$$

where Z_L is the termination impedance and Z_C is the characteristic impedance of the wiring.
More information about Return Loss can be found in [ITU-T G.117], section 4.1.1.
The AOI return loss, measured at the active output interface of the network device shall be at least 16 dB in the passband and at least 8 dB in the transition band of the downstream signal bandwidth as defined in Table 7-4. The network device AOI return loss mask is shown in Figure 7.6-8.

Copyright International Organization for Standardization
Provided by IHS under license with ISO
No reproduction or networking permitted without license from IHS Not for Resale

The return loss shall be measured for a resistive test load range of Z_C=85 to 135 Ω when driving copper pairs and Z_C=65 to 85 Ω when driving coax. The return loss shall be measured while the implementation of the PMD sublayer is powered.

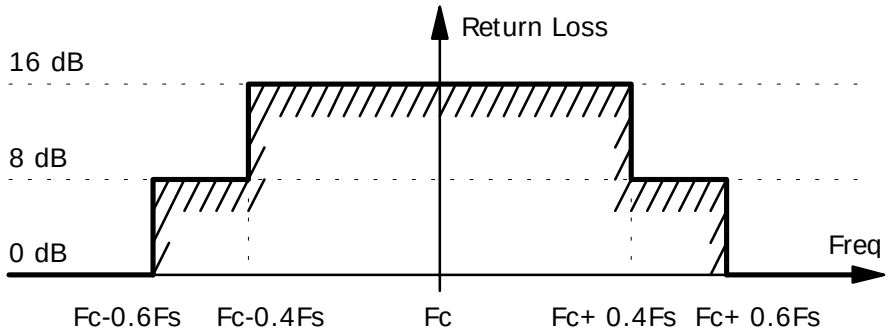

Figure 7.6-8 - Return loss mask of the network device AOI.

Note: The termination impedance of the network device must be chosen such that the return loss requirement is met over the specified impedance range. However, this does not preclude the use of cabling with a higher impedance tolerance.

7.6.1.5.3.5 Transmitter Signal Balance

This section only applies when the AOI of the network device is driving copper pairs.
OSB is a measure of unwanted longitudinal signals at the output of the network device. The longitudinal output voltage (Vcm) is monitored to the differential output voltage (Vdiff), while the generator in the device is active.

$$OSB = 20\log\left|\frac{V_{diff}}{V_{cm}}\right|$$

The OSB, measured at the active output interface of the network device shall be minimum 40 dB over the frequency range equal to the downstream signal bandwidth as defined in Table 7-4. The OSB shall be measured in accordance with [ITU-T G.117] and [ITU-T O.9].

7.6.1.5.4 Receive Functionality

The receiver decodes the incoming signal stream received from the user device Active Input Interface and converts it into an equivalent bit stream for presentation to the TC sublayer.
The receiver shall require no more than 500 ms to reach a state that achieves the BER specified in section 7.6.1.2 from the time presented with a valid signal transmitted through the cable plant specified in sections 7.6.1.8, 7.6.1.9, 7.6.1.10 and 7.6.1.11.

7.6.1.5.5 Decoding

The decoding process shall be matched to the encoding process:

- constellation

7.6.1.5.6 User Device Active Input Interface

This section specifies the

- impulse response for the receive filters
- received signal power level
- receiver return loss

7.6.1.5.6.1 Impulse Response for the Receive Filters

The receive filters shall be matched to the transmit filters to avoid intersymbol interference.
The receive filters shall have the same impulse response as the transmit filters.
The receive filters shall have the same excess bandwidth as the transmit filters.

 © ISO/IEC 1999 - All rights reserved

--`,,```,,,,````-`-`,,`,,`,`,,`---
Copyright International Organization for Standardization
Provided by IHS under license with ISO
No reproduction or networking permitted without license from IHS
Not for Resale

7.6.1.5.6.2 Received Signal Power Level

A minimum user device input power is defined.
The user device total input power spectral density, measured over the spectrum mask in Table 7-4, shall be at least -35dBm.
If the user device is driven from copper pairs, the test load shall consist of a single 110Ω±0.2% resistor. For frequencies less than 100 MHz, the series inductance of the resistor shall be less than 20nH and the parallel capacitance shall be less than 2pF.
If the user device is driven from coax, the test load shall consist of a single 75Ω±0.2% resistor. For frequencies less than 100 MHz, the series inductance of the resistor shall be less than 20nH and the parallel capacitance shall be less than 2pF.
A downstream total power spectrum density, measured over the spectrum mask defined in Table 7-4, of -20dBm (informative value) at the home side of the network termination (home boundary) is considered appropriate.

7.6.1.5.6.3 Receiver Return Loss

The Return Loss of the user device Active Input Interface specifies the amount of differential signal incident upon the AII that is reflected.
The Active Input Interface Return Loss specifies the amount of differential signal incident (for copper pair and coax) upon the AII that is reflected.

$$RL = 20\log\left|\frac{Z_L + Z_C}{Z_L - Z_C}\right|,$$

where Z_L is the termination impedance and Z_C is the characteristic impedance of the wiring.
More information about Return Loss can be found in [ITU-T G.117],section 4.1.1.
The AII return loss, measured at the active input interface of the user device shall be at least 16 dB in the passband and at least 8 dB in the transition band of the downstream signal bandwidth as defined in Table 7-4. The user device AII return loss mask is shown in Figure 7.6-9.
The return loss shall be measured for a resistive test load Z_C=85 to 135Ω when driven from copper pairs and Z_C=65 to 85Ω when driven from coax. The return loss shall be measured while the implementation of the PMD sublayer is powered.

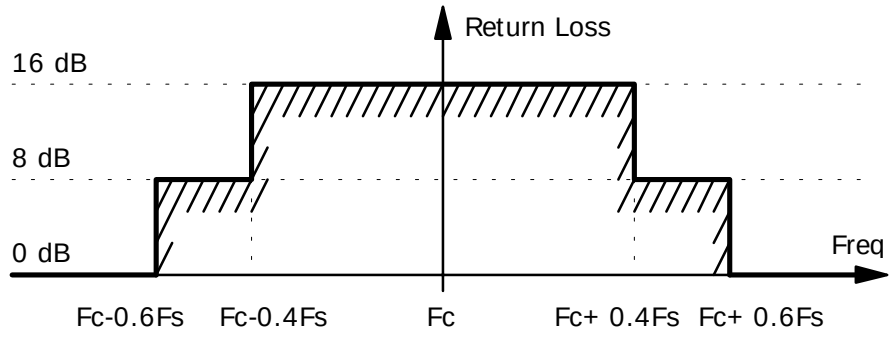

Figure 7.6-9 - Return loss mask of the user device AII.

Note: The termination impedance of the user device must be chosen such that the return loss requirement is met over the specified impedance range. However, this does not preclude the use of cabling with a higher impedance tolerance.

7.6.1.6 Upstream QPSK Modulation

This PMD sublayer specification uses the Quadrature Phase Shift Keying Modulation (QPSK) technique to provide bit transmission capability and bit timing in the upstream direction (from the user device to the network device).
The sublayer includes functions to generate and receive waveforms suitable for the media, and the insertion and extraction of symbol timing information. The implementation of the PMD sublayer receives a byte stream from the TC sublayer, encodes and transmits the signal to the adjacent PMD sublayer. The receiving implementation of

Copyright International Organization for Standardization
Provided by IHS under license with ISO
No reproduction or networking permitted without license from IHS Not for Resale

the PMD sublayer decodes the signal and delivers it as a byte stream to the TC sublayer. These operations are described below.

7.6.1.6.1 Transmit functionality

The PMD sublayer shall be comprised of transmit functionality obtained from the blocks shown in Figure 7.6-10. Any implementation that produces the same functional behavior at the network device Active Output Interface is equally valid. The transmit function encodes the byte stream received from the TC layer into an equivalent QPSK encoded symbol stream and then into a modulated signal for presentation to the media at the user device Active Output Interface.

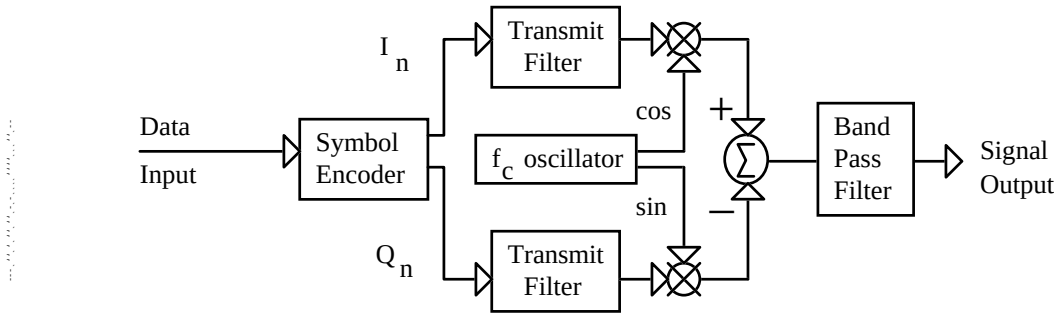

Figure 7.6-10- Block diagram of digital QPSK transmitter functionality.

The symbol stream from the encoder is divided into two paths, I_n and Q_n, where n designates the nth symbol period. The two symbol streams are sent to pulse-shaping half-Nyquist filters before quadrature modulation of the I and Q signal. The output of the cosine modulator and the negative of the output of the sine modulator are summed into a single signal, the result passed through a band-pass filter, and then transmitted onto the media.

7.6.1.6.2 Encoding

The amplitudes of the I_n and Q_n components in the QPSK constellations shall maintain the relative value 1, with a tolerance of ±0.06 relative to this value, as depicted in the constellation diagram of Figure 7.6-12.
For operation at 19.44 Mbit/s, the encoding used shall be the QPSK code with a symbol rate equal to 9.72 Mbaud.
For operation at 1.62 Mbit/s, the encoding used shall be the QPSK code with a symbol rate equal to 0.81 Mbaud.
For QPSK, the encoder shall map two data bits into a symbol as shown in Figure 7.6-11. Bytes shall be mapped from the PMD sublayer data input (TC sublayer data output) into four two bit symbols. The first bit out of the PMD sublayer data input into a given symbol shall be b0.

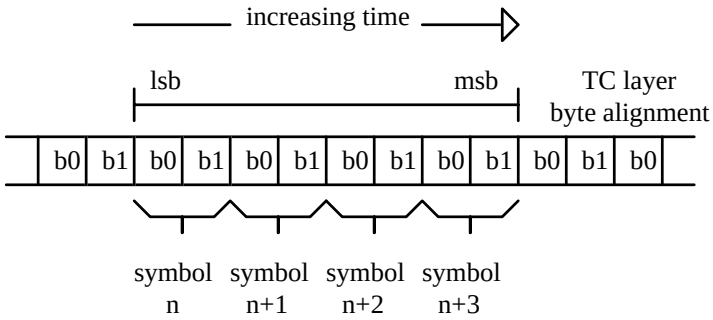

Figure 7.6-11- Byte-to-symbol mapping for QPSK.

As an example of the byte-to-symbol mapping, the I and Q values for the ramp-up, preamble and sync bytes are shown in Table 7-6. These bytes have fixed values, as defined in section 7.6.2.2.3. Therefore, the symbol sequence as shown in Table 7-6 is always present at the start of each upstream frame.

 © ISO/IEC 1999 - All rights reserved

Copyright International Organization for Standardization
Provided by IHS under license with ISO
No reproduction or networking permitted without license from IHS
Not for Resale

Table 7-6 - Mapping of Ramp-up, Preamble and Sync bytes into QPSK symbols.

	Symbol n		Symbol n+1		Symbol n+2		Symbol n+3		Byte value
	I	Q	I	Q	I	Q	I	Q	(hex)
Ramp-up	1	1	1	1	1	1	1	-1	40H
Preamble 1	1	1	1	-1	1	1	1	-1	44H
Preamble 2	-1	-1	-1	1	1	1	1	-1	4BH
Preamble 3	-1	-1	1	-1	-1	-1	1	-1	77H
Sync 1	-1	-1	-1	1	1	1	1	-1	4BH
Sync 2	-1	-1	1	-1	-1	-1	1	-1	77H

For QPSK, the signal constellation shall be as shown in Figure 7.6-12.
Each incoming group of 2 bits b(0..1) shall be encoded into a QPSK symbol. The relative levels of the amplitude of the symbols in each dimension shall correspond to the levels ±1. The output symbols In and Qn shall be generated from the bits b0 and b1 as shown in Figure 7.6-12.

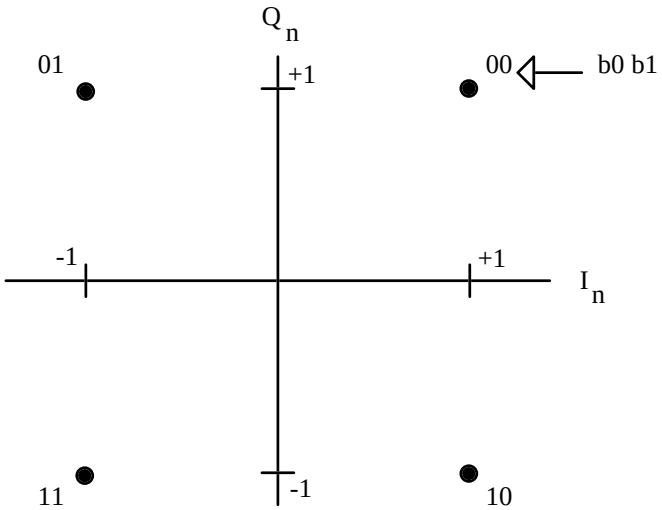

Figure 7.6-12 - QPSK signal constellation.

7.6.1.6.3 User Device Active Output Interface

This section specifies the

- impulse response for the transmit filters
- transmitted signal power spectrum
- transmitter signal power level
- transmitter ramp-up and ramp-down timing
- transmitter return loss
- transmitter signal balance

7.6.1.6.3.1 Impulse Response for the Transmit Filters

The time-domain response of a square-root raised-cosine pulse with excess bandwidth parameter α is given by:

$$g(t) = \frac{\sin[\frac{\pi t}{T}(1-\alpha)] + \frac{4\alpha t}{T}\cos[\frac{\pi t}{T}(1+\alpha)]}{\frac{\pi t}{T}[1-(\frac{4\alpha t}{T})^2]}$$

The impulse response of the transmit filters shall use an excess bandwidth of α=0.35 for bit rate setting A and α=0.5 for bit rate settings B, C and D (see Table 7-7 and Table 7-8). In the latter case (α=0.5), the square-root raised-cosine pulse is therefore defined as (Figure 7.6-13):

--`,,```,,,,````-`-`,,`,,`,`,,`---
Copyright International Organization for Standardization
Provided by IHS under license with ISO
No reproduction or networking permitted without license from IHS
Not for Resale

$$g(t) = \frac{\sin(\pi\frac{t}{2T}) + (\frac{2t}{T})\cos(\pi\frac{3t}{2T})}{(\pi\frac{t}{T})[1-(\frac{2t}{T})^2]},$$

where T is the symbol period.

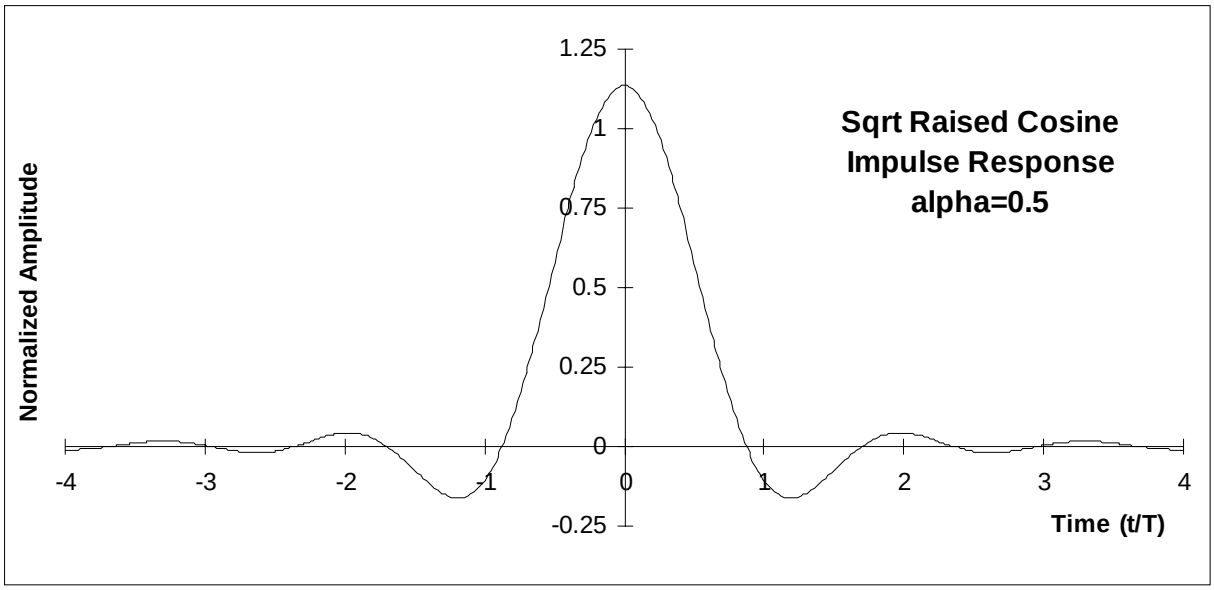

Figure 7.6-13 - Sqrt Raised Cosine Impulse Response g(t) of the α=0.5 transmit filter.

The output signal shall be defined as

$$S(t) = \sum_n [I_n \bullet g(t-nT) \bullet \cos(2\pi f_c t) - Q_n \bullet g(t-nT) \bullet \sin(2\pi f_c t)]$$

with I_n and Q_n equal to ±1, independently from each other, and f_c the QPSK modulator's center frequency. Because of the transmit filters' impulse response being an infinite time response (finite bandwidth), the actual impulse responses of the transmitter will be an approximation of the above equations over a fixed interval. For a 50% excess bandwidth QPSK system, a filter span of [-2T,+2T] (informative value) can be considered adequate (16 taps filter in a 4 times oversampling implementation).

7.6.1.6.3.2 Transmitted Signal Power Spectrum

The User Device Active Output interface shall have a power spectrum equivalent to the square root of a raised-cosine shaping with symbol frequency f_s and center frequency f_c.
The symbol frequency, the center frequency and the excess bandwidth depend upon the bit rate setting and shall comply to the values in Table 7-7 and Table 7-8. The upstream signal can be transmitted in the lower part of the spectrum (below the downstream signal) or in the higher part of the spectrum (above the downstream signal).

Table 7-7 - Upstream Spectrum Allocation (higher frequencies)

Profile	Upstream in Higher Frequencies (above Downstream)						
	Bit rate *Mbit/s*	Symbol rate f_s	Lowest freq. f_l	Center freq. f_c	Highest freq. f_h	c/s ratio f_c / f_s	roll-off α
A	19.44	9.24	32.3190	38.8800	45.4410	4.00	0.35
B	1.62	0.81	22.0725	22.6800	23.2875	28.00	0.50
C	1.62	0.81	12.3525	12.9600	13.5675	16.00	0.50
D	1.62	0.81	7.4925	8.1000	8.7075	10.00	0.50

 © ISO/IEC 1999 - All rights reserved

--`,,```,,,,````-`-`,,`,,`,`,,`---

Copyright International Organization for Standardization
Provided by IHS under license with ISO
No reproduction or networking permitted without license from IHS
Not for Resale

Table 7-8 - Upstream Spectrum Allocation (lower frequencies)

Profile	Upstream in Lower Frequencies (below Downstream)						
	Bit rate *Mbit/s*	Symbol rate f_s	Lowest freq. f_l	Center freq. f_c	Highest freq. f_h	c/s ratio f_c / f_s	roll-off α
A	-	-	-	-	-	-	-
B	1.62	0.81	0.6075	1.2150	1.8225	1.50	0.50
C	1.62	0.81	0.6075	1.2150	1.8225	1.50	0.50
D	1.62	0.81	0.6075	1.2150	1.8225	1.50	0.50

The transmitted signal power spectrum, as measured at the Active Output Interface of the user device, shall meet the power spectrum template (as defined in Table 7-9) with lower and upper limits for attenuation at several points in the upstream signal bandwidth (as defined in Table 7-7 or Table 7-8). In-between these points, linear interpolation shall be applied. The power spectrum template shall also be met during ramp-up and ramp-down of the bursty upstream transmitter.
The power spectrum template puts requirements on the implementation accuracy of the square-root raised cosine filters and the analog filtering. The power spectrum template is defined as a function of the normalized frequency x,

where $x = \frac{f - f_c}{f_s / 2}$.

Table 7-9 - Upstream power spectrum template.

Normalized frequency x	Spectral Lower Bound	Theoretical value	Spectral Upper Bound
≤ -1-5α/2	NA	NA	-50 dB
-1-2α	NA	NA	-40 dB
-1-3α/2	NA	NA	-40 dB
-1-α	NA	NA	-30 dB
-1-α/2	-10.0 dB	-8.3 dB	-7.0 dB
-1	-4.0 dB	-3.0 dB	-2.0 dB
-1+α/2	-1.7 dB	-0.7 dB	+0.3 dB
-1+α	-1.0 dB	0 dB	+1.0 dB
0	-1.0 dB	0 dB	+1.0 dB
+1-α	-1.0 dB	0 dB	+1.0 dB
+1-α/2	-1.7 dB	-0.7 dB	+0.3 dB
+1	-4.0 dB	-3.0 dB	-2.0 dB
+1+α/2	-10 dB	-8.3 dB	-7.0 dB
+1+α	NA	NA	-30 dB
+1+3α/2	NA	NA	-40 dB
+1+2α	NA	NA	-40 dB
≥ +1+5α/2	NA	NA	-50 dB

Note: NA means the value is not applicable.

The group delay distortion seen at the Active Output Interface, which is introduced on the upstream signal by the user device analog output stage, shall be lower than 1/8 symbol period. This assumes that the delay distortion is attributed to the analog filters only.

7.6.1.6.3.3 Transmitter Power Level

A minimum upper bound of the user device output power range is defined.
The upper bound of the user device total output power spectrum density range, measured over the spectrum mask defined in Table 7-7 or Table 7-8, shall be equal to +15dBm (active transmitter).
The mechanism to adapt the user device output power to the loop characteristics is described in the TC layer section.
During the guard time (as defined in section 7.6.2.2.3), the user device's bursty transmitter shall have a total output power spectrum density less than -40dBm, measured over the spectrum mask defined in Table 7-7 or Table 7-8 (silent transmitter).

© ISO/IEC 1999 - All rights reserved

Copyright International Organization for Standardization
Provided by IHS under license with ISO
No reproduction or networking permitted without license from IHS
Not for Resale

If the user device is driving copper pairs, the test load shall consist of a single 110Ω±0.2% resistor. For frequencies less than 100 MHz, the series inductance of the resistor shall be less than 20nH and the parallel capacitance shall be less than 2pF.
If the user device is driving coax, the test load shall consist of a single 75Ω±0.2% resistor. For frequencies less than 100 MHz, the series inductance of the resistor shall be less than 20nH and the parallel capacitance shall be less than 2pF.
An upstream total power spectrum density, measured over the spectrum mask defined in Table 7-7 or Table 7-8, of 0 dBm (informative value) at the premises side of the network termination (premises boundary) is considered appropriate.

7.6.1.6.3.4 Transmitter Ramp-up and Ramp-down Timing

Ramp-up shall be defined as the transition from silent to active transmitter.
Ramp-down shall be defined as the transition from active to silent transmitter.
The ramp-up byte as defined in section 7.6.2.2.3, is mapped into 4 QPSK ramp-up symbols, according to the byte-to-symbol mapping shown in Figure 7.6-11. Ramp-up of the transmitter shall be performed in the time period necessary for the transmission of the first, second and third ramp-up symbol. Before the first ramp-up symbol, the transmitter shall be silent. During and after the fourth ramp-up symbol, the transmitter shall be active (see Figure 7.6-14).
The ramp-down byte as defined in section 7.6.2.2.3, is mapped into 4 QPSK ramp-down symbols, according to the byte-to-symbol mapping shown in Figure 7.6-11. Ramp-down of the transmitter shall be performed in the time period necessary for the transmission of the second, third and fourth ramp-down symbol. Before and during the first ramp-down symbol, the transmitter shall be active. After the fourth ramp-down symbol, the transmitter shall be silent (see Figure 7.6-14).

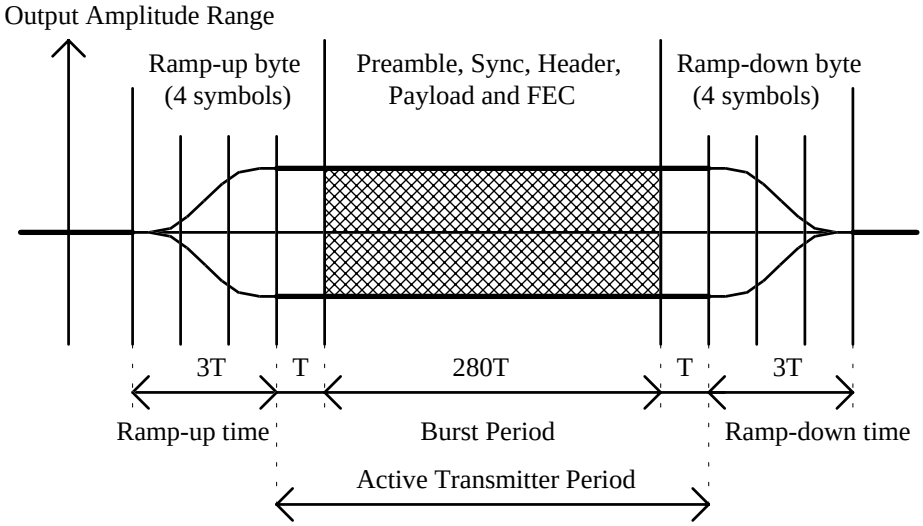

Figure 7.6-14 - Ramp-up and Ramp-down Timing.

7.6.1.6.3.5 Transmitter Return Loss

The Active Output Interface Return Loss specifies the amount of differential signal incident (for copper pair and coax) upon the AOI that is reflected.

$$RL = 20\log\left|\frac{Z_L + Z_C}{Z_L - Z_C}\right|,$$

where Z_L is the termination impedance and Z_C is the characteristic impedance of the wiring.
More information about Return Loss can be found in [ITU-T G.117],section 4.1.1.
The AOI return loss, measured at the active output interface of the user device shall be at least 16 dB in the passband and at least 8 dB in the transition band of the upstream signal bandwidth as defined in Table 7-7 or Table 7-8. The user device AOI return loss mask is shown in Figure 7.6-15.

 © ISO/IEC 1999 - All rights reserved

Copyright International Organization for Standardization
Provided by IHS under license with ISO
No reproduction or networking permitted without license from IHS
Not for Resale

The return loss shall be measured for a resistive test of Z_C=85 to 135Ω when driving copper pairs and Z_C=65 to 85Ω when driving coax. The return loss shall be measured while the implementation of the PMD sublayer is powered.

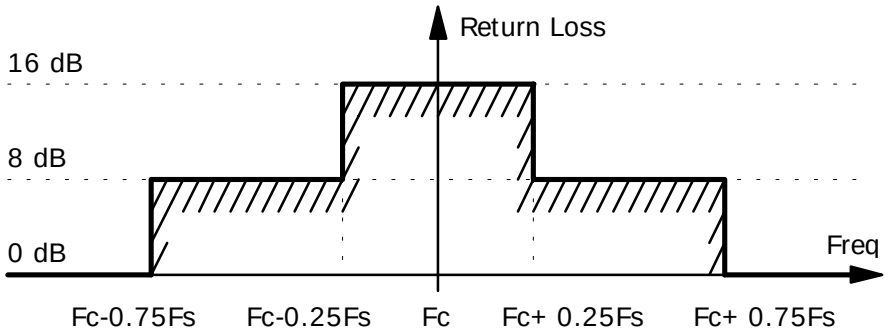

Figure 7.6-15 - Return loss mask of the user device AOI.

7.6.1.6.3.6 Transmitter Signal Balance

This section only applies when the AOI of the user device is driving copper pairs.
OSB is a measure of unwanted longitudinal signals at the output of the network device. The longitudinal output voltage (Vcm) is monitored to the differential output voltage (Vdiff), while the generator in the device is active.

$$OSB = 20\log\left|\frac{V_{diff}}{V_{cm}}\right|$$

The OSB, measured at the output of the network device shall be minimum 40 dB over the frequency range equal to the upstream signal bandwidth as defined in Table 7-7 or Table 7-8. The OSB shall be measured in accordance with [ITU-T G.117] and [ITU-T O.9].

7.6.1.6.4 Receive Functionality

The QPSK receiver decodes the incoming QPSK signal stream received from the network device Active Input Interface and converts it into an equivalent bit stream for presentation to the TC sublayer.

7.6.1.6.5 Decoding

The decoding process shall be matched to the encoding process:

- QPSK constellation

7.6.1.6.6 Network Device Active Input Interface

This section specifies the

- impulse response for the receive filters
- receiver return loss

7.6.1.6.6.1 Impulse Response for the Receive Filters

The receive filters shall be matched to the transmit filters to avoid intersymbol interference.
The receive filters shall have the same impulse response as the transmit filters.
The receive filters shall have the same excess bandwidth as the transmit filters.

7.6.1.6.6.2 Receiver Return Loss

The Return Loss of the network device Active Input Interface specifies the amount of differential signal incident upon the AII that is reflected.
The Active Input Interface Return Loss specifies the amount of differential signal incident (for copper pair and coax) upon the AII that is reflected.

Copyright International Organization for Standardization
Provided by IHS under license with ISO
No reproduction or networking permitted without license from IHS Not for Resale

$$RL = 20\log\left|\frac{Z_L + Z_C}{Z_L - Z_C}\right|,$$

where Z_L is the termination impedance and Z_C is the characteristic impedance of the wiring.
More information about Return Loss can be found in [ITU-T G.117],section 4.1.1.
The AII return loss, measured at the active input interface of the network device shall be at least 16 dB in the passband and 8 dB in the transition band of the upstream signal bandwidth as defined in Table 7-7 or Table 7-8. The network device AII return loss mask is shown in Figure 7.6-16.
The return loss shall be measured with a resistive test load of Zc=85 to 135Ω when driven from copper pairs and Zc=65 to 85Ω when driven from coax.. The return loss shall be measured while the implementation of the PMD sublayer is powered.

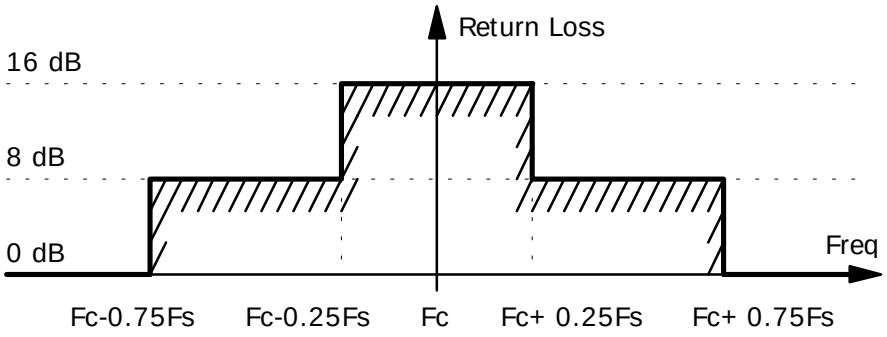

Figure 7.6-16 - Return loss mask of the network device AII.

7.6.1.7 Media Interface Connectors

At the user device, copper pairs shall be terminated with a Media Interface Connector as specified in Section 4 and Figure 1 of [ISO 8877]. This connector is an 8-pin Modular Plug RJ45-8 and shall meet or exceed the [ISO/IEC 11801] Category 3 or higher copper pair connecting hardware. An example of a Media Interface Connector Modular plug is shown in Figure 7.6-17.

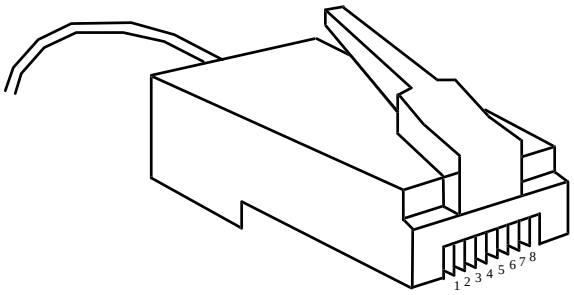

Figure 7.6-17 - Example of a MIC Modular Plug.

The Jack/Socket shall be a connector as specified in Section 4 and Figure 2 of [ISO 8877]. The connector hardware used within this implementation of the PMD sublayer shall be an unshielded 8-contact jack and meet or exceed the electrical requirements of [ISO/IEC 11801] Category 3 or higher copper pair. An example of a Media Interface Connector Jack is shown in Figure 7.6-18.

 © ISO/IEC 1999 - All rights reserved

Copyright International Organization for Standardization
Provided by IHS under license with ISO
No reproduction or networking permitted without license from IHS
Not for Resale

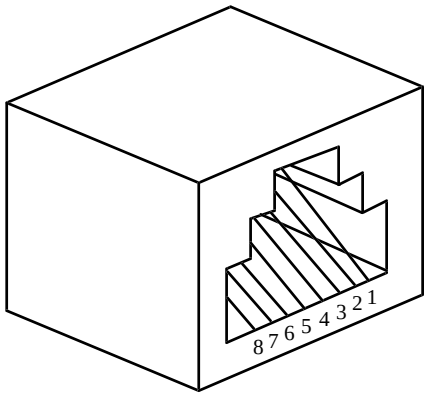

Figure 7.6-18 - Example of a MIC Jack.

The pins 4 and 5 of the RJ45-8 shall be used to connect the copper pairs, according to the [ISO/IEC 11801] pair grouping and pin assignment recommendation (see Figure 7.6-19).
When shielded copper pairs are used to connect the user device, the Media Interface Connector shall be shielded. However, the Jack/Socket shall not be shielded to avoid ground loops.

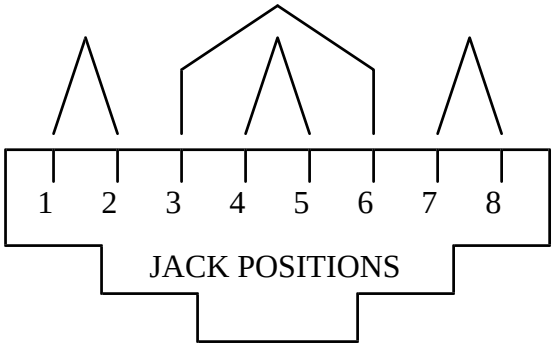

Contact	Signal at the user device MIC jack
1	unused
2	unused
3	unused
4	TX/RX +
5	TX/RX -
6	unused
7	unused
8	unused

Figure 7.6-19 - Eight position jack pin and pair assignments (This illustration is a front view of the jack connector).

A user device shall connect to coaxial cable using the F-type connector. The Media Interface Connector shall be of the male F-type. The Jack/Socket shall be of the female F-type.

7.6.1.8 Reference loops

The following reference loops (including copper pair and coax parts) define limiting conditions for the application of the Physical Interface (PMD and TC sublayer).
In case the Physical Medium is copper pairs, sections of multi-pair distribution cable shall be assumed to be 100% filled with UTP systems carrying the Physical Interface signals. These Physical Interface signals shall all be conveying the same data-rate (see section 7.6.1.1).
The reference loops are made up of two parts:

- The outside plant distribution cable section
- The in-premises distribution cable section

7.6.1.8.1 Reference Loop for Copper Pair outside plant distribution section

The reference loop shall be defined as the concatenation of the following elements:

a) 70m overhead non-twisted copper pair 0.5 mm drop-wire
b) 30m underground 5 pair 0.5 mm distribution cable
c) 170m 20 pair 0.5 mm distribution cable

Note: 0.5 mm is approximately equivalent to 24 AWG
0.4 mm is approximately equivalent to 26 AWG

Copyright International Organization for Standardization
Provided by IHS under license with ISO
No reproduction or networking permitted without license from IHS Not for Resale

The 0.5 mm non-twisted copper pair drop wire shall be characterized by R,L,G,C characteristics in Table 7-10 under the heading DW10.
All sizes of 0.5 mm distribution cable shall be characterized by R,L,G,C parameters in Table 7-11 under the heading DWUG.
A graphical representation of the propagation loss on the outside copper pair reference loop (200 m DWUG cable and 70 m DW10 cable) is given in Figure 7.6-20.

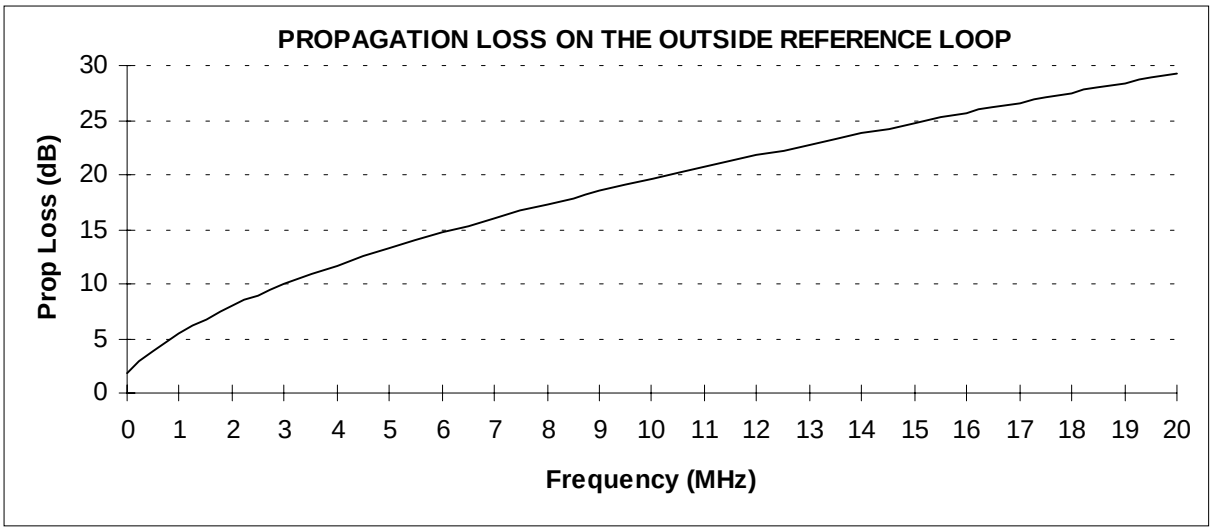

Figure 7.6-20 - Propagation loss on the outside copper pair reference loop.
(Source: British Telecom)

The cable balance of the aerial drop wire shall be no better than 30dB.
The Equal-Level far-end crosstalk (EL-FEXT) shall be characterized as:

$$EL - FEXT = 10\log\frac{(49/N)^{0.6}}{\Psi f^2 d}$$

with N equal to the number of disturbers (N<50)
Ψ constant equal to 2.623×10^{-7}
f equal to the frequency in MHz
and d equal to the loop length in meters

Figure 7.6-21 shows the theoretical definition of EL-FEXT. Assume that the two sine-wave generators both transmit the same sine-wave with the same frequency f and amplitude V.

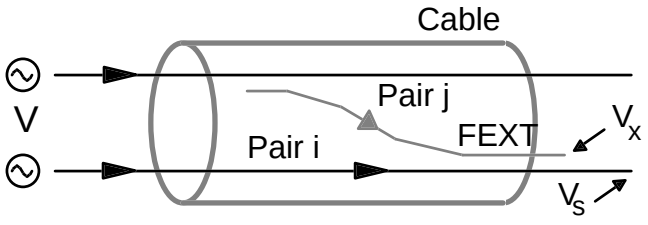

Figure 7.6-21 - Illustration of pair-to-pair FEXT.

Two signals appear at the end of the copper pair i. One is an attenuated version of the sine-wave transmitted on pair i and has amplitude V_s. The other is the interfering FEXT sine-wave from pair j with amplitude V_x. With N interfering pairs, the EL-FEXT power sum loss is defined as:

 © ISO/IEC 1999 - All rights reserved

--`,,```,,,,````-`-`,,`,,`,`,,`---
Copyright International Organization for Standardization
Provided by IHS under license with ISO
No reproduction or networking permitted without license from IHS
Not for Resale

$$EL-FEXT = \frac{V_s^2}{V_x^2} \quad with \quad V_x^2 = \sum_{j=1}^{N} V_{xj}^2$$

A graphical representation of the EL-FEXT on the outside copper pair reference loop (170m 20-pair cable and 30m 5-pair cable) is given in Figure 7.6-22.

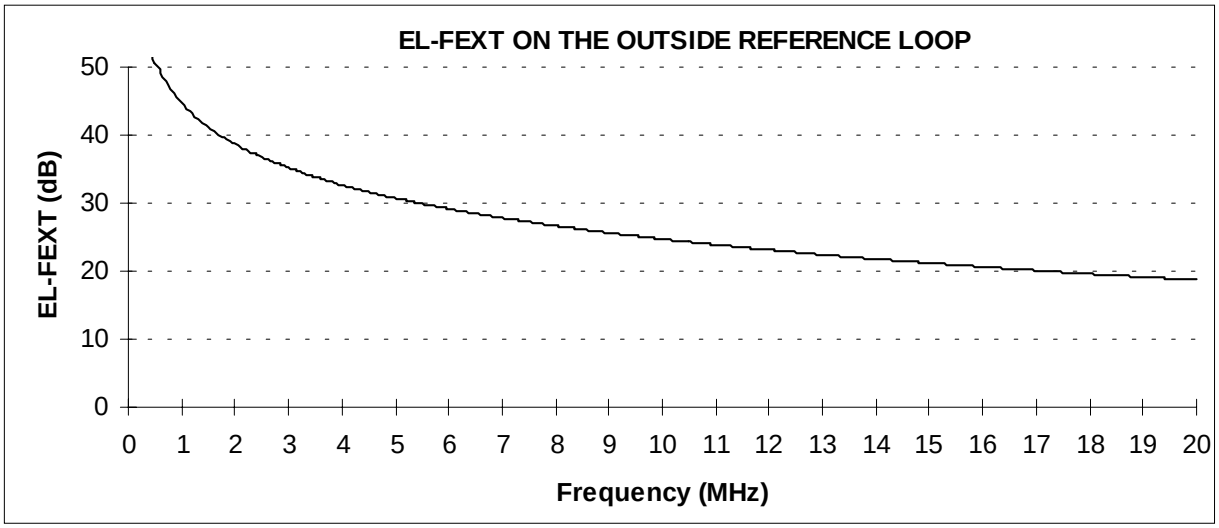

Figure 7.6-22 - EL-FEXT on the outside copper pair reference loop.

7.6.1.8.2 Reference Loop for Coax outside plant distribution section

The reference loop shall be defined as a single section of 100m coaxial cable of type RG59.
The cable loss at 600 MHz shall be less than 23 dB / 100 meters.

7.6.1.8.3 Reference Loop for Coax in-premises distribution

This section only applies to in-home distribution over coax.
A first reference loop shall be defined as (see Figure 7.6-23)

- 30m coax terminated by user device
- RF 1:2 splitter at 10m from entry point - terminated by user device at 10m
- RF 1:2 splitter at 20m from entry point - terminated by user device at 10m
- Any combination of 2 out of 3 user devices can be disconnected, leaving open-ended stubs.
- Bounce free connecting or disconnecting of a user device shall not cause a frame sync loss to the other user devices (see section 7.6.2.1.4).

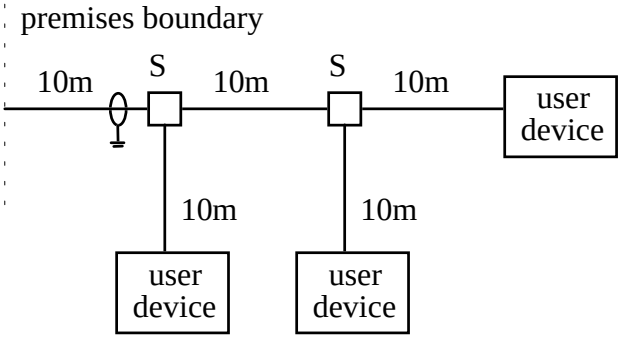

Figure 7.6-23 - In-premises coax reference loop 1.

A second reference loop shall be defined (see Figure 7.6-24)

Copyright International Organization for Standardization
Provided by IHS under license with ISO
No reproduction or networking permitted without license from IHS Not for Resale

- RF 1:4 splitter at 10m from entry point
- First splitter outlet terminated by user device at 10m
- Second splitter outlet terminated by user device at 20m
- Third splitter outlet terminated by user device at 30m
- Fourth splitter outlet terminated by user device at 30m
- Any combination of 2 out of 4 user devices can be disconnected, leaving open-ended stubs.
- Bounce free connecting or disconnecting of a user device shall not cause a frame sync loss to the other user devices (see section 7.6.2.1.4).

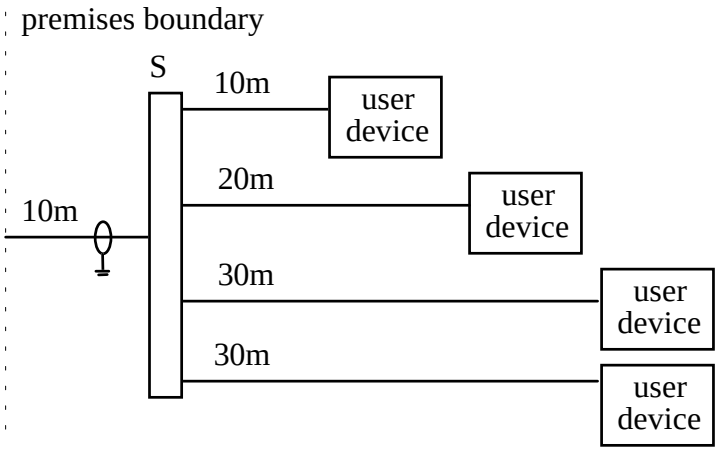

Figure 7.6-24 - In-premises coax reference loop 2.

For both reference loops, the coax cable characteristics shall be of the RG6 type.
The labels “input port” and “output port” shall be defined as applicable to the downstream signal.
The coax splitters in the first reference loop shall exhibit an insertion loss (input to output port and vice versa) less than 4 dB, measured on an RMS basis for each of the different bit rate settings, as shown in Table 7-4 and Table 7-7.
The coax splitter in the second reference loop shall exhibit an insertion loss (input to output port and vice versa) less than 8 dB, measured on an RMS basis for each of the different bit rate settings, as shown in Table 7-4 and Table 7-7.
Each of the coax splitters in both reference loops shall exhibit a notch of 15 dB depth in absolute propagation loss at any center frequency in the 1.5 to 4.5 MHz range.
The coax splitters in both reference loops shall have a port-to-port isolation between output ports of at least 3.0dB in the range of 1 to 5 MHz and of at least 12.0 dB in the range of 5 to 40 MHz.
The input port of the coax splitters in both reference loops shall have a return loss complying to the return loss definition of the Active Input Interface of the user device (Figure 7.6-9).
The output ports of the coax splitter in both reference loops shall have a return loss complying to the return loss definition of the Active Input Interface of the network device (Figure 7.6-15).
The return loss of a port shall be measured with the other ports properly terminated. The test load shall consist of a single 75Ω±0.2% resistor. For frequencies less than 100 MHz, the series inductance of the resistor shall be less than 20nH and the parallel capacitance shall be less than 2pF.

7.6.1.8.4 Reference Loops for Copper Pair in-premises distribution

This section only applies to in-home distribution over copper pairs.
The reference loop shall be defined (see Figure 7.6-25)

- RF 1:4 splitter implemented in the Network termination (NT)
- 4 point-to-point copper pairs in-premises
- First splitter outlet terminated by user device at 10m
- Second splitter outlet terminated by user device at 20m
- Third splitter outlet terminated by user device at 30m
- Fourth splitter outlet terminated by user device at 30m
- Any combination of 2 out of 4 user devices can be disconnected, leaving open-ended stubs.
- Bounce free connecting or disconnecting of a user device shall not cause a frame sync loss to the other user devices (see section 7.6.2.1.4).

 © ISO/IEC 1999 - All rights reserved

Copyright International Organization for Standardization
Provided by IHS under license with ISO
No reproduction or networking permitted without license from IHS
Not for Resale

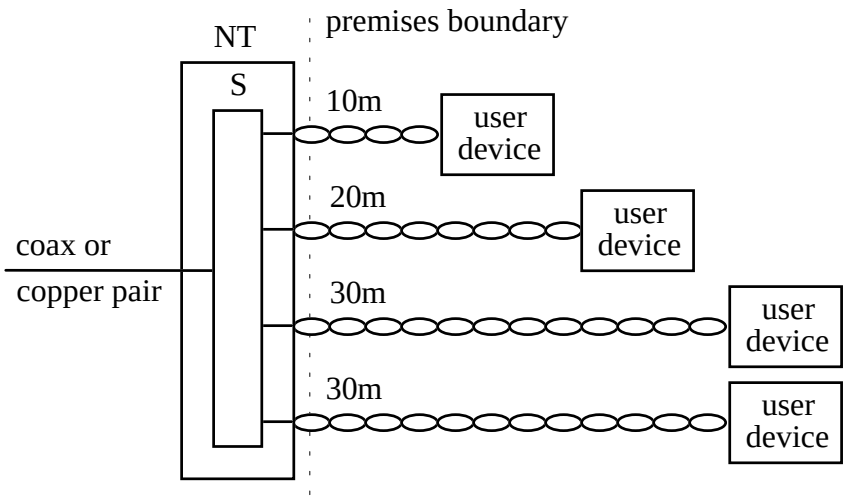

Figure 7.6-25 - In-premises copper pair reference loop.

The copper pairs shall have characteristics of the Category 3 type, as defined in [ISO/IEC 11801].
The labels “input port” and “output port” shall be defined as applicable to the downstream signal.
The copper pair splitter in the reference loop shall have a port-to-port isolation between output ports of at least 25 dB over the downstream and upstream frequency range as defined in Table 7-4, Table 7-7 and Table 7-8.
The copper pair splitter in the reference loop shall have an insertion loss (input to output port and vice versa) less than 8 dB, measured on an RMS basis over the downstream and upstream frequency range as defined in Table 7-4, Table 7-7 and Table 7-8.
The input port of the copper pair splitter shall have a return loss complying to the return loss definition of the Active Input Interface of the user device (Figure 7.6-9).
The output ports of the copper pair splitter shall have a return loss complying to the return loss definition of the Active Input Interface of the network device (Figure 7.6-15).
The return loss of a port shall be measured with the other ports properly terminated. The test load for a copper pair port shall consist of a single 110Ω±0.2% resistor. The test load for a coax port shall consist of a single 75Ω±0.2% resistor For frequencies less than 100 MHz, the series inductance of the resistor shall be less than 20nH and the parallel capacitance shall be less than 2pF.

7.6.1.9 Rates and Reach

For Profiles A, the all-coax reference loop applies (100 m drop + 30 m in-home). For profiles B, C and D with the upstream signal in the higher frequencies, any mix of the outside coax or twisted-pair reference loop with the inside coax or twisted-pair reference loop applies. For profiles B, C and D with the upstream signal in the lower frequencies, any mix of the outside coax or twisted-pair reference loop with the inside twisted-pair reference loop applies. The all twisted-pair reference loops is 270 m drop + 30 m in-home.
This shall be confirmed by measuring at least 6 dB margin at a bit error rate after error correction of 10^{-7}. The measurement shall be performed in the presence of white Gaussian noise at the receiver input with power spectral density of -140 dBm/Hz.

7.6.1.10 Impulse Noise

The implementation of the PMD sublayer of the Physical Interface shall recover without operator intervention when subjected to a 0.5kV impulse noise (fast transient) as described in Level 2 of [IEC 801-4]. The implementation of the PMD sublayer shall be tested using the methods described in [IEC 801-4].

7.6.1.11 Electromagnetic Compatibility

7.6.1.11.1 Regulatory

The Physical Interface implementation shall meet regional regulatory constraints (e.g. FCC, ETSI).

© ISO/IEC 1999 - All rights reserved

Copyright International Organization for Standardization
Provided by IHS under license with ISO
No reproduction or networking permitted without license from IHS
Not for Resale

7.6.1.11.2 Additional Susceptibility Constraints

The receiver shall meet all of the performance requirements set forth in this international standard in presence of a single interference signal with -14 dBm average power in the internationally agreed Ham radio bands as defined in the radio regulations [ITU RR8].
The interference signal shall have the following characteristics:

- Intermittent 5 sec on 10 sec off.
- Modulated with CCITT speech weighted noise interrupted at the syllabic rate with 1:3 on/off ration. The resultant base-band signal is band-limited to 4 kHz with 6 dB/octave pre-emphasis in-band.
- The center frequency shall change by at least 50 kHz every 2 minutes.

To meet the international standard in presence of higher power interferences, it might be necessary to choose appropriate wiring or to include additional equipment between the network device and the user device such as a common mode rejecter or a null inserter.

Table 7-10 - Characteristics of 0.5 mm UTP drop wires

Source: BT contribution TD55 of TM3 meeting in Rome in October 1994

DW10

f (kHz)	R (Ω/km)	L (µH/km)	C (nF/km)	G (mS/km)
5	191	724.63	74.72	0.13
10	191	721.82	72.89	0.92
50	195	707.05	69.15	0.99
100	207	694.78	67.75	1.70
500	342	648.79	64.88	6.73
1000	475	624.65	63.81	12.19
5000	1056	578.22	61.62	48.34
10000	1493	565.74	60.79	87.50
20000	2112	557.33	60.03	158.39
30000	2586	553.87	59.61	224.12

Table 7-11 - Characteristics of 0.5mm distribution cables

Source: BT contribution TD55 of TM3 meeting in Rome in October 1994

DWUG

f (kHz)	R (Ω/km)	L (µH/km)	C (nF/km)	G (mS/km)
5	179	694.81	55.43	0.003
10	179	694.56	55.40	0.007
50	183	692.06	55.34	0.036
100	193	688.47	55.32	0.073
500	316	661.64	55.27	0.385
1000	438	640.00	55.25	0.789
5000	974	598.93	55.21	4.16
10000	1376	591.53	55.20	8.51
20000	1947	587.94	55.19	17.42
30000	2384	586.83	55.18	26.48

7.6.2 Transmission Convergence (TC) PHY Sublayer Specification

The Transmission Convergence (TC) Sublayer deals with physical aspects which are independent of the transmission medium characteristics. Most of the functions comprising the TC sublayer are involved with generating and processing the overhead bytes contained in the data framing, as described in this section. The network device data framer maps ATM cells together with overhead data into downstream data frames for continuous downstream transmission. The user device data framer maps a single ATM cell together with overhead data into upstream data frames for bursty upstream transmission.

 © ISO/IEC 1999 - All rights reserved

Copyright International Organization for Standardization
Provided by IHS under license with ISO
No reproduction or networking permitted without license from IHS Not for Resale

7.6.2.1 The Downstream Data Frame Format

7.6.2.1.1 Building a Downstream Frame

The downstream data frame format shall be as shown in Figure 7.6-26. The frame length shall be 810 bytes. The frame shall consist of header bytes and payload bytes. The frame payload shall consist of an integer number of Reed-Solomon code words. Each Reed-Solomon code word shall consist of ATM bytes and forward-error-correction (FEC) bytes. ATM bytes shall be mapped into the RS code words in the order they are passed from the ATM layer to the TC layer. No ATM cell alignment shall be considered in respect to the RS code words. The downstream bit rate available for mapping of 53-byte ATM cells is shown in Table 7-12.
RS code words shall have a length of 66 bytes: 58 ATM data bytes and 8 FEC bytes, calculated over the 58 ATM data bytes using the RS(66,58) code. The first ATM data byte shall be the most significant byte of the code word and shall be transmitted first. The last FEC byte shall be the least significant byte of the RS code word and shall be transmitted last.
The user device shall use the error correcting capability to correct up to 4 bytes per RS code word. In case an RS code word contains uncorrectable errors, the 58 ATM data bytes shall still be passed to the cell specific TC sublayer functions (see section 7.6.2.5).
The Reed-Solomon code generator polynomial and field generator polynomial shall be as described in section 7.6.2.3 with N and K set to implement an RS(66,58) code.
To increase the error correction performance, RS code words may be interleaved before mapping them into the downstream frame. When applying interleaving to the RS code words, long data erasures can be corrected by the RS decoder. The deinterleaver spreads the erased data over many RS code words, such that the number of corrupted bytes per code word remains within the correction power of the RS decoder. Depending on the physical medium, impulse noise conditions and end-to-end delay requirements, the Interleaving Depth (D) is set to an appropriate value by the network device (see definition of FEC format byte in downstream frame header).

Table 7-12 - Bit rate available for mapping of ATM cells.

Downstream frame bit rate	ATM pipe bit rate
51.84 Mbit/s	44.544 Mbit/s
25.92 Mbit/s	22.272 Mbit/s
12.96 Mbit/s	11.136 Mbit/s

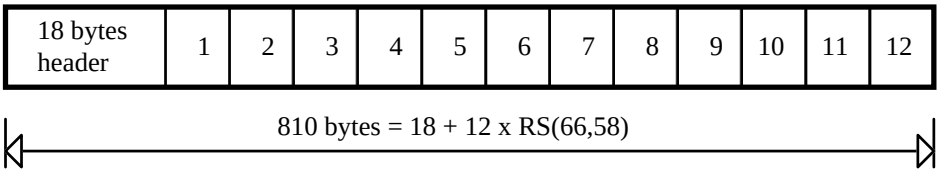

Figure 7.6-26 - Downstream frame format.

7.6.2.1.2 Downstream Data Randomization and Derandomization

A self-synchronizing randomizer/derandomizer shall be provided in the implementation of the TC layer. The randomizer shall be implemented in the network device, the derandomizer shall be implemented in the user device.
The network device randomization shall be performed before RS encoding and shall comply to (see Figure 7.6-27):

$$D_{out}^{n} = D_{in}^{n} \oplus D_{out}^{n-18} \oplus D_{out}^{n-23}$$

The user device derandomization shall be performed after RS decoding and shall comply to (see Figure 7.6-28):

Copyright International Organization for Standardization
Provided by IHS under license with ISO
No reproduction or networking permitted without license from IHS Not for Resale

$$D_{out}^{n} = D_{in}^{n} \oplus D_{in}^{n-18} \oplus D_{in}^{n-23}$$

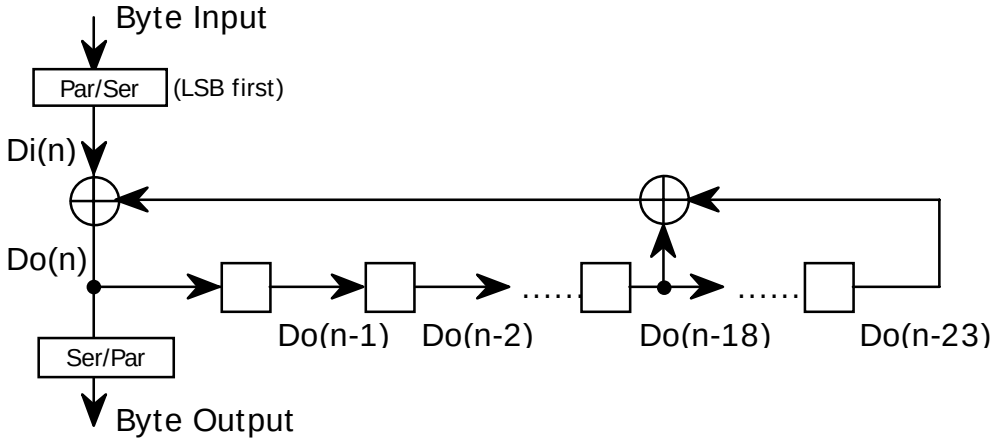

Figure 7.6-27 - Network Device Data Randomizer.

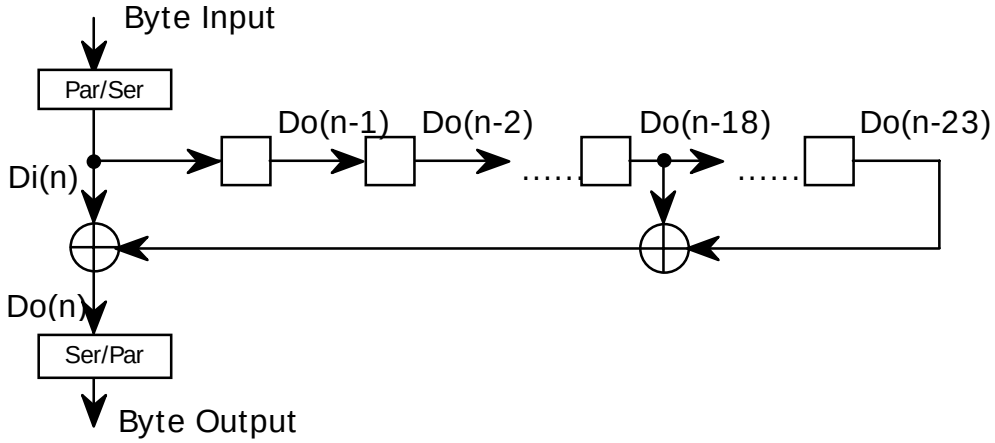

Figure 7.6-28 - User Device Data Derandomizer.

Both the downstream frame header and the downstream frame payload shall be randomized using the network device randomizer characterization (see Figure 7.6-27). However, the header randomizer and the payload randomizer shall be implemented separately. The header randomizer shall have 96 bit randomizing cycles per downstream frame by randomizing 12 header bytes (the whole header excluding the two SYNC bytes and the four FEC bytes). The payload randomizer shall have 5568 bit randomizing cycles per downstream frame by randomizing the 696 ATM cell data bytes (the whole payload excluding the 96 FEC bytes). Both header and payload randomization shall be continuous over all downstream frames.
Since a self-synchronizing (de)randomizer is used with a continuous (non-bursty) signal, the (de)randomizer can be initialized to a random value. The initialization of the (de)randomizer shall only done at reset or power up. Initialization at a random value results in a better decorrelation of downstream signals, and thus, better FEXT performance when transmitted through a multi-pair copper cable.
Care shall be taken not to disturb the byte frame on the data traffic. The byte-parallel data stream shall first be converted in a serial stream with convention 'least-significant-bit-first' before it is applied to the randomizer. After randomization, the byte-parallel stream shall be restored with the same convention, so that bytes which are not randomized remain unchanged.

7.6.2.1.3 Definition of a Superframe

A superframe defines a period in time, during which an integer number of downstream frames and an integer number of upstream frames shall be transmitted. Superframe related definitions are shown in Figure 7.6-29.

 © ISO/IEC 1999 - All rights reserved

--`,,```,,,,````-`-`,,`,,`,`,,`---

Copyright International Organization for Standardization
Provided by IHS under license with ISO
No reproduction or networking permitted without license from IHS
Not for Resale

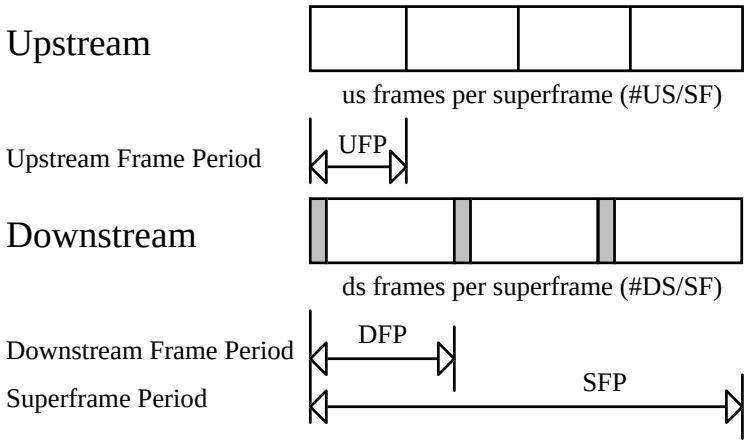

Figure 7.6-29- Superframe related definitions.

Depending on the bit rate setting, the superframe has a different transmission time. For each of the bit rate settings A, B, C and D, the timing diagram and the number of downstream and upstream frames carried in one superframe are shown in Figure 7.6-30.

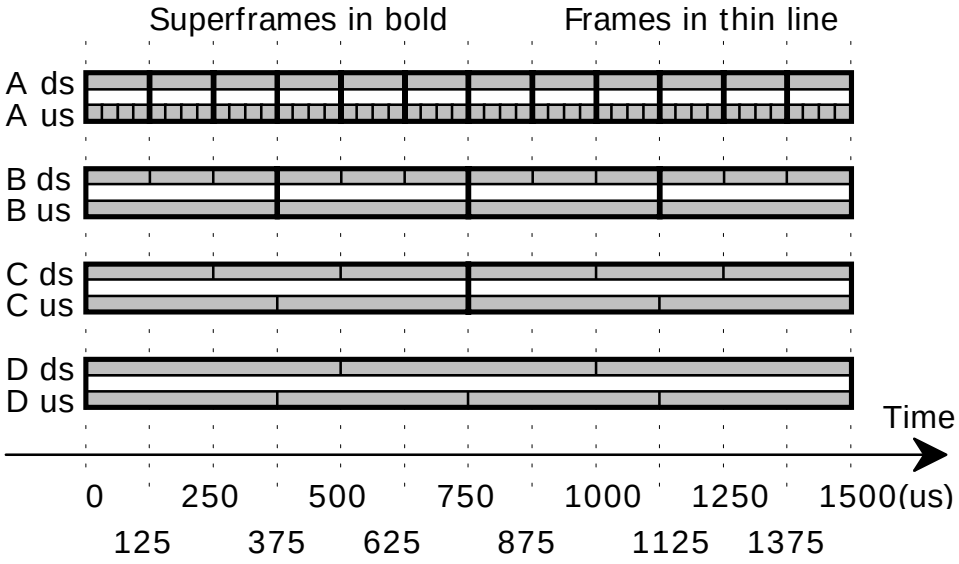

Figure 7.6-30 - Superframe and frame timing for bit rate settings A, B, C and D.

The network device shall align the downstream frame time alignment with its 8 kHz network clock as shown in Figure 7.6-31. This allows the user device to recover the 8 kHz network clock by upsampling the frame frequency (8, 4 or 2 kHz).

The user device shall derive the upstream frame time alignment from the downstream superframes, such that each upstream frame (as seen at the user device active output interface) starts 0 up to 4 upstream symbols after the start of the downstream superframe (as seen at the user device active input interface). The start of a downstream and upstream frame shall be defined as the center of its first symbol period. Downstream and upstream symbols are defined in Sections 7.6.1.5 and 7.6.1.6 respectively.

In case multiple upstream frames are transmitted per downstream superframe, these margins shall also apply at the following time intervals after the start of each downstream superframe (see Figure 7.6-31):

--`,,```,,,,````-`-`,,`,,`,`,,`---
Copyright International Organization for Standardization
Provided by IHS under license with ISO
No reproduction or networking permitted without license from IHS
Not for Resale

Profile A	31.25µs	62.50µs	93.75µs
Profile B	not applicable		
Profile C	375µs		
Profile D	375µs	750µs	1125µs

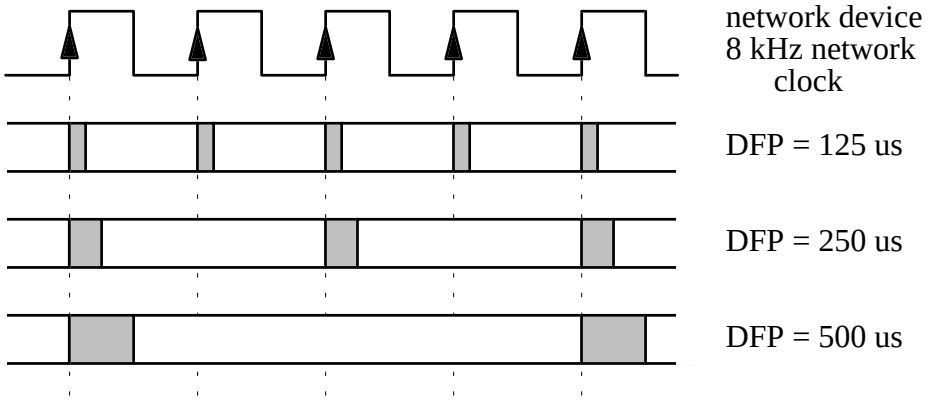

Figure 7.6-31 - Alignment of the downstream frames to the network device 8kHz clock.

7.6.2.1.4 Downstream Frame Header Byte Definition

The frame header shall consist of 18 bytes. All frames within the same superframe shall have the same header byte values (except the SFSC counter and the FEC bytes). The allocation of the header bytes shall be as shown in Table 7-13. Byte 0 shall be transmitted first.

Table 7-13- Allocation of the frame header bytes.

Byte	Name	Byte	Name
0	Sync 1	9	Control
1	Sync 2	10	Grant 1
2	User Data 1	11	Grant 2
3	User Data 2	12	Grant 3
4	Frame Format	13	Grant 4
5	FEC Format	14	FEC 1
6	Alarm	15	FEC 2
7	Data Link Address	16	FEC 3
8	Data Link Data	17	FEC 4

Byte 0-1: Sync 1 and Sync 2
The Sync 1 and Sync 2 bytes are the frame sync word and shall have fixed values.
Sync 1 = F6 hex, Sync 2 = 28 hex.
The frame sync word allows frame delineation in the user device. The frame delineation algorithm is based on the Sync_Event (Sync 1 and Sync 2) and shall be as shown in Figure 7.6-32:

- Transition of “Sync” to “Hunt” state when the frame sync word is not found at the expected location 7 times consecutively.
- Transition of “Presync” to “Sync” state when the frame sync word is found at the expected location 6 times consecutively.

 © ISO/IEC 1999 - All rights reserved

--`,,```,,,,````-`-`,,`,,`,`,,`---

Copyright International Organization for Standardization
Provided by IHS under license with ISO
No reproduction or networking permitted without license from IHS
Not for Resale

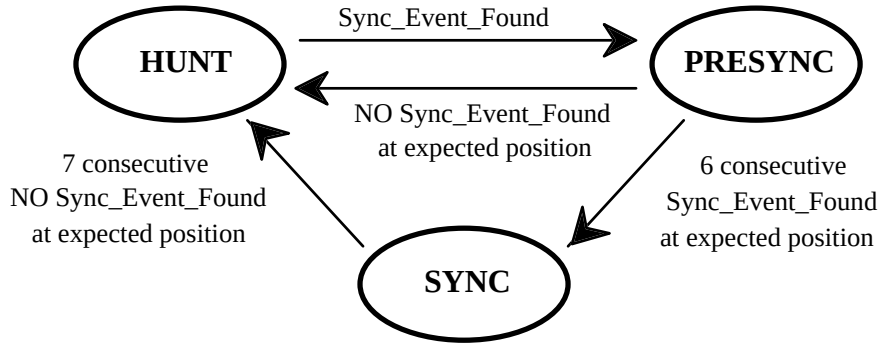

Figure 7.6-32 - Downstream frame synchronization state machine.

The frame delineation process is similar to the ATM cell delineation process described in section 7.6.2.5.3.

Byte 2-3: User Data 1 and User Data 2

Both User Data bytes shall be made available by the deframer implementation for further processing at the TC layer level in the user device. The operation of the PMD sublayer (including demodulator and symbol decoder) in the user device shall not depend upon the value of the User Data bytes.

bit 7	bit 6	bit 5	bit 4	bit 3	bit 2	bit 1	bit 0
UD[7]	UD[6]	UD[5]	UD[4]	UD[3]	UD[2]	UD[1]	UD[0]

Byte 4: Frame Format

The Frame Format byte shall contain the superframe definition: superframe period (DFP), number of downstream frames per superframe (#DS/SF) and the number of upstream frames per superframe (# US/SF). The Frame Format byte value only depends upon the bit rate setting.

bit 7	bit 6	bit 5	bit 4	bit 3	bit 2	bit 1	bit 0
Reserved	Reserved	DFP 1	DFP 0	#DS/SF[1]	#DS/SF[0]	#US/SF[1]	# US/SF[0]
		00: DFP=125 us (8 kHz)		00: #DS/SF = 1		00: #US/SF = 1	
		01: DFP=250 us (4 kHz)		01: #DS/SF = 2		01: #US/SF = 2	
		10: DFP=500 us (2 kHz)		10: #DS/SF = 3		10: #US/SF = 3	
		11: not used		11: #DS/SF = 4		11: #US/SF = 4	

Reserved bits shall be set to 0.

The superframe definition for the possible bit rate settings shall be as given in Table 7-14.

Table 7-14- Frame Format settings depending on the bit rate.

Bit rate setting	DFP	SFP	#DS/SF	#US/SF
A	125 µs	125 µs	1	4
B	125 µs	375 µs	3	1
C	250 µs	750 µs	3	2
D	500 µs	1500 µs	3	4

Byte 5: FEC Format

The FEC byte shall contain the Reed-Solomon code word Interleaving Depth Parameter (M[4..0]) indication. The interleaving and deinterleaving process in network and user device shall be as described in section 7.6.2.3 with the interleaving depth (D) and block length (I) defined as:

$I = (N/2)$

$D = M * (N/2) + 1$

where N is the RS code word length and M=0..31.

bit 7	bit 6	bit 5	bit 4	bit 3	bit 2	bit 1	bit 0
Reserved	Reserved	Reserved	M[4]	M[3]	M[2]	M[1]	M[0]

Copyright International Organization for Standardization
Provided by IHS under license with ISO
No reproduction or networking permitted without license from IHS Not for Resale

The Interleaving Depth Parameter (M) value shall range from 0 to 31. The user device shall be able to deinterleave the complete set of interleaving depths corresponding with an Interleaving Depth Parameter (M) ranging from 0 to 31.

Byte 6: Alarm

The Alarm byte shall contain the frame payload alarm indication signal (AIS).

bit 7	bit 6	bit 5	bit 4	bit 3	bit 2	bit 1	bit 0
AIS	Reserved	Reserved	Reserved	Reserved	Reserved	Reserved	Reserved

AIS = 0 shall indicate normal operation (valid frame payload).
AIS = 1 shall indicate alarm status (invalid frame payload).
Reserved bits shall be set to 0.

Byte 7: Data Link Address

The Data Link Address byte shall contain four command bits (COM[3..0]) and a user device identification (ID[3..0]).

The command bits interpretation shall be:

0		Idle command
1	→	Reset for Device ID[3..0]
2	→	Transmitter Shutdown for Device ID[3..0]
3		Data Link Byte = Network Device Transmit Power
4 to 14		Reserved
15		Data Link Byte = User Data

The reserved commands shall not be used by the network device.

The network device transmit power is encoded into a byte indicating 256 power levels. The upper level 255 shall correspond with the maximum transmit power of +15 dBm. The lower level 0 shall correspond with the minimum transmit power of -15 dBm. Linear interpolation shall be applied for the other levels. There shall be a maximum period of 250ms in-between consecutive transmissions of the network device output power.

bit 7	bit 6	bit 5	bit 4	bit 3	bit 2	bit 1	bit 0
COM[3]	COM[2]	COM[1]	COM[0]	ID[3]	ID[2]	ID[1]	ID[0]

The Device ID value ranges from 0 to 15. If the Device ID is 0, the Data Link command shall be interpreted by all users devices (broadcast). If the Device ID is 15, the Data Link command shall not be interpreted by any user device. For other Device ID values (1 to 14), the Data Link byte shall be interpreted by the user device to which this Device ID is allocated.

After a reset command is sent to a particular user device, grants shall no longer be allocated to this user device. The user device shall restart the procedure to get a Device ID allocated, just as it does after power up (sign-on cycle), to get grants allocated again.

After a transmitter shutdown is sent to a particular device, grants shall no longer be allocated to this user device. The user device shall no longer output any upstream data (silent transmitter) until it is reset through the command described above (resulting in a sign-on procedure) or until it is going through a sign-on cycle for any other reason (e.g. through user intervention). After sign-on, the user device gets grants allocated again.

Byte 8: Data Link Byte

The Data Link Data byte shall be made available by the deframer implementation for further processing at the TC layer level in case the Data Link Address is broadcast (value 0) or matches the user device's Device ID.

bit 7	bit 6	bit 5	bit 4	bit 3	bit 2	bit 1	bit 0
DL[7]	DL[6]	DL[5]	DL[4]	DL[3]	DL[2]	DL[1]	DL[0]

Byte 9: Control Byte

The Control Byte shall contain the Grant Control (GC1, GC2, GC3 and GC4) and the superframe Synchronization Control SFSC[1..0].

The GC bits indicate whether the corresponding grant byte is a grant which is already allocated to a user device or not. In case the grant is not allocated yet, the corresponding time slot can be used for sign-on of new user devices (see also sign-on section).

GC bit = 0	not open for sign-on
GC bit = 1	open for sign-on

There shall not be more than 50ms between two consecutive grants opened for sign-on. Only grant values ranging from 1 to 14 may have the GC bit set to 1. Grant values 0 and 15 shall always have the GC bit set to 0.

 © ISO/IEC 1999 - All rights reserved

Copyright International Organization for Standardization
Provided by IHS under license with ISO
No reproduction or networking permitted without license from IHS
Not for Resale

The superframe synchronization control bits indicate the sequence number of the frame within the superframe. The SFSC[1..0] bits shall take values from 0 to (#DS/SF-1) and shall be 0 for the first frame within a superframe.

bit 7	bit 6	bit 5	bit 4	bit 3	bit 2	bit 1	bit 0
GC1	GC2	GC3	GC4	Reserved	Reserved	SFSC[1]	SFSC[0]

Byte 10-13: Grants

The Grant bytes shall be used to control the upstream TDMA access. A superframe consists of up to 4 upstream frames. Each of these upstream frames may be transmitted by a different user device. Through the 4 grant bytes, the network devices shall indicate which user device is allowed to transmit which upstream frame.

Per superframe, 4 grant bytes shall be transmitted downstream. The first grant byte shall correspond to the first upstream frame, the second grant byte shall correspond to the second upstream frame, etc. If for example, the superframe contains only 2 upstream frames, the third and fourth grant bytes shall contain a user device ID equal to 15 (closed grant).

The Device ID value ranges from 0 to 15.

If the device ID = 0, the upstream frame may be transmitted by any user device (optional upstream response for all user devices, collision possible).

If the device ID = 15, no upstream frame shall be transmitted by any user device (closed grant).

If the Device ID is in the 1 to 14 range and it is not opened for sign-on, a valid upstream frame shall be transmitted by the user device to which this Device ID has been allocated (mandatory upstream response for the granted user device). A valid upstream frame may contain an idle ATM cell. In case this Device ID has not been allocated to any user device, no upstream frame will be transmitted.

If the Device ID is in the 1 to 14 range and it is opened for sign-on (through the GC bit=1), the upstream frame can be used by a new user device for sign-on (see section 7.6.2.4). If no new user device does so, no upstream frame will be transmitted.

bit 7	bit 6	bit 5	bit 4	bit 3	bit 2	bit 1	bit 0
U_ERR	C_ERR	PLC1	PLC0	ID[3]	ID[2]	ID[1]	ID[0]

The granting and acknowledgment mechanism implemented in the bits ID[3..0] and U_ERR, C_ERR, PLC1 and PLC0 is shown in Figure 7.6-33 (bit rate setting A), Figure 7.6-34 (bit rate setting B), Figure 7.6-35 (bit rate setting C) and Figure 7.6-36 (bit rate setting D). Grants given in each of the downstream frames (DF) of the (n)th superframe (SF) are used for the upstream frames (US) of the (n+1)st superframe. These upstream frames of the (n+1)st superframe are acknowledged in each of the downstream frames of the (n+3)rd superframe.

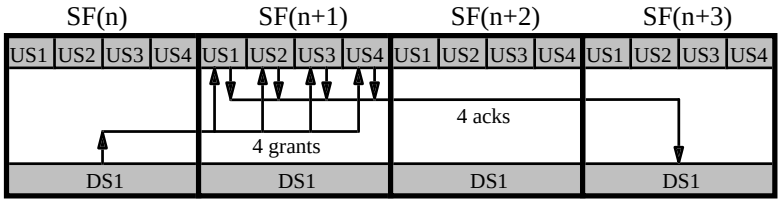

Figure 7.6-33 - Granting and acknowledgment of upstream access for bit rate setting A.

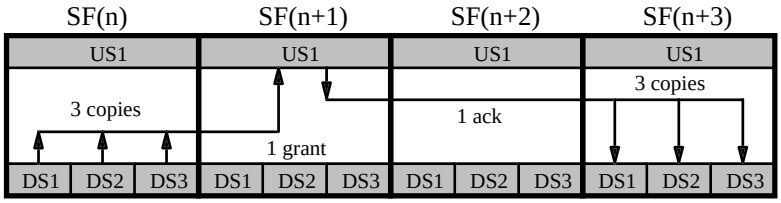

Figure 7.6-34 - Granting and acknowledgment of upstream access for bit rate setting B.

Copyright International Organization for Standardization
Provided by IHS under license with ISO
No reproduction or networking permitted without license from IHS Not for Resale

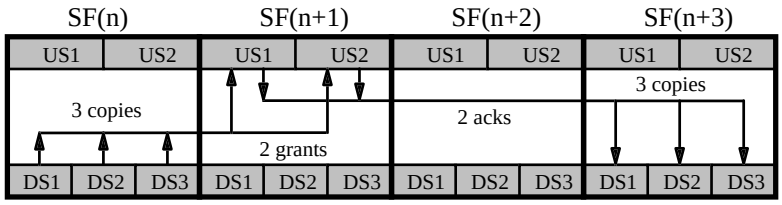

Figure 7.6-35 - Granting and acknowledgment of upstream access for bit rate setting C.

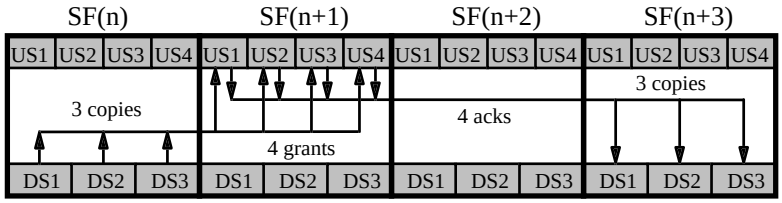

Figure 7.6-36 - Granting and acknowledgment of upstream access for bit rate setting D.

The U_ERR and C_ERR bits of the nth (n=1..4) grant byte shall indicate the error status of the nth upstream frame transmitted in the second previous superframe in the network device:

U_ERR = 0	C_ERR = 0	no errors detected
U_ERR = 0	C_ERR = 1	correctable errors
U_ERR = 1	C_ERR = 0	uncorrectable errors
U_ERR = 1	C_ERR = 1	no upstream frame received

If an upstream frame contains uncorrectable errors, the upstream frame shall be discarded by the network device. Whenever the upstream frame is discarded by the network device, the corresponding U_ERR bit shall be set to 1. The U_ERR bit being set to 1 shall correspond to a negative acknowledgment of the upstream frame reception (NACK).

If an upstream frame contains no errors or correctable errors, the upstream frame shall be accepted by the network device. Whenever the upstream frame is accepted by the network device, the corresponding U_ERR bit shall be set to 0. The U_ERR bit being set to 0 shall correspond to a positive acknowledgment of the upstream frame reception (ACK).

The Power Level Control (PLC1, PLC0) bits of the nth (n=1..4) grant byte shall indicate the power level status of the nth upstream frame transmitted in the second previous superframe in the network device:

00	the user device shall maintain the upstream power at the same level
10	the user device shall decrease the upstream power by one level
11	the user device shall increase the upstream power by 1 level
01	the user device can choose to perform one of the above actions

An increment or decrement of the power by one level shall correspond with a power increment or decrement between 0.75dB and 1.25 dB.

Byte 14-17: FEC bytes

The 4 FEC bytes are calculated over the bytes 2 to 13, using the Reed-Solomon RS(16,12) code. Bytes 2 to 17 of the downstream frame header shall compose an RS(16,12) code word, with byte 2 being the most significant byte of the code word and byte 17 being the least significant byte of the code word.

The user device shall use the error correcting capability to correct up to 2 bytes per downstream frame header. The Reed-Solomon code generator polynomial and field generator polynomial shall be as described in section 7.6.2.3 with N and K set to implement an RS(16,12) code.

Except for the SFSC counter and the FEC bytes, all frame headers within a superframe shall be identical. This gives the user device multiple chances (if #DS/SF > 1) to receive the frame header. The header received with the lowest error level shall be processed in the user device i.e. correct headers shall be preferred over corrected headers.

In case all the frame headers received in a downstream superframe are uncorrectable, the user device is not able to extract the grant bytes from the downstream superframe. The user device shall therefore not perform any upstream access in the next superframe time period.

 © ISO/IEC 1999 - All rights reserved

Copyright International Organization for Standardization
Provided by IHS under license with ISO
No reproduction or networking permitted without license from IHS
Not for Resale

7.6.2.2 The Upstream Data Frame Format

7.6.2.2.1 Building an Upstream Frame

The upstream data frame format shall be as shown in Figure 7.6-37. The frame length shall be 75.9375 bytes. The frame shall consist of preamble bytes, header bytes, payload bytes, forward error correction (FEC) bytes and gap bytes. The frame payload shall only consist of a single ATM cell (53 bytes).

preamble 6 bytes	header 4 bytes	**ATM cell** **53 bytes**	FEC 8 bytes	gap 4.9375 bytes

Figure 7.6-37- Upstream Frame Format (frame length = 75.9375 bytes)

7.6.2.2.2 Upstream data randomization/derandomization

A self-synchronizing randomizer/derandomizer shall be provided in the implementation of the TC layer. The randomizer shall be implemented in the user device, the derandomizer shall be implemented in the network device.
The user device randomization shall be performed before RS encoding and shall comply to (see Figure 7.6-38):

$$D_{out}^{n} = D_{in}^{n} \oplus D_{out}^{n-5} \oplus D_{out}^{n-23}$$

The network device derandomizer shall be performed after RS decoding and shall comply to (see Figure 7.6-39):

$$D_{out}^{n} = D_{in}^{n} \oplus D_{in}^{n-5} \oplus D_{in}^{n-23}$$

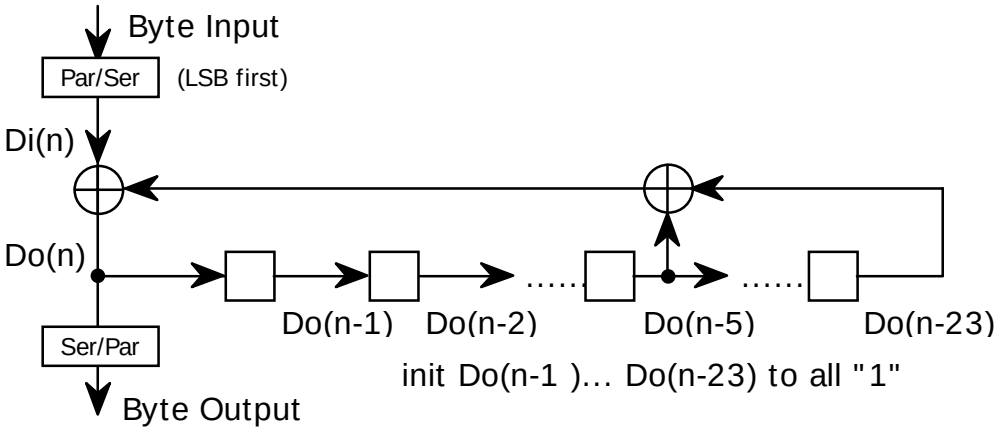

Figure 7.6-38 - User Device Data Randomizer.

Copyright International Organization for Standardization
Provided by IHS under license with ISO
No reproduction or networking permitted without license from IHS Not for Resale

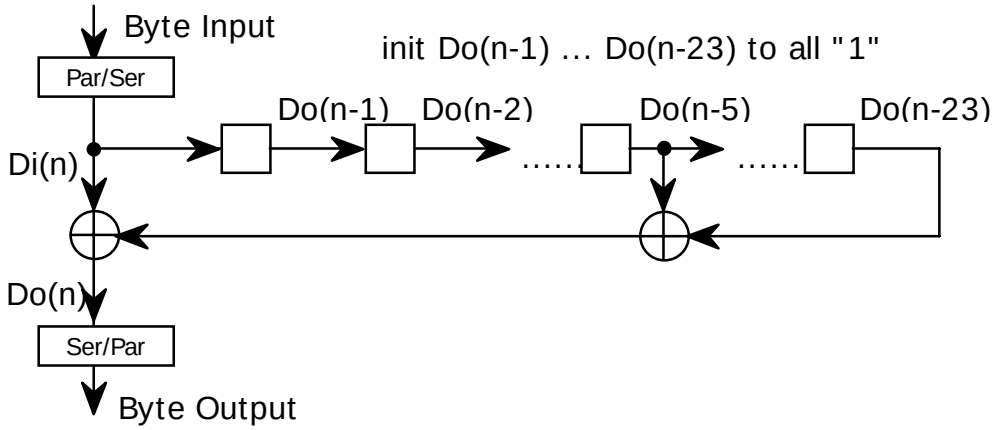

Figure 7.6-39 - Network Device Data Derandomizer.

The randomizer shall have 456 bit randomizing cycles per upstream frame by randomizing the 4 header bytes and the 53 ATM cell data bytes in the payload.
Considering the bursty character of the upstream data in a point-to-multipoint environment, the randomizer and derandomizer shall be applied on a single burst basis. Randomization and derandomization shall start with the first bit of the first byte of the header of the upstream frame and stop with the last bit of the last byte of the ATM cell contained in the upstream frame. Both the randomizer and derandomizer shall be initialized to “all ones” before (de)randomizing an upstream frame.
Care will be taken not to disturb the byte frame on the data traffic. The byte-parallel data stream is first converted in a serial stream with convention 'least-significant-bit-first' before it is applied to the (de)randomizer. After (de)randomization, the byte-parallel stream is restored with the same convention.

7.6.2.2.3 Upstream Frame Header Byte Definition

The allocation of the 75.9375 bytes in the upstream frame shall be as given in Table 7-15. Byte 0 shall be transmitted first.

Table 7-15 - Allocation of the frame bytes.

Byte	Name	Byte	Name
0	Ramp-up	10-62	ATM cell
1	Preamble 1	63	FEC 1
2	Preamble 2	64	FEC 2
3	Preamble 3	65	FEC 3
4	Sync 1	66	FEC 4
5	Sync 2	67	FEC 5
6	Data Link Address	68	FEC 6
7	Data Link Byte	69	FEC 7
8	Alarm Byte	70	FEC 8
9	Queue Depth	71	Ramp-down
		72-74.9375	Gap (guard time)

The ramp-up, preamble, sync, ramp down and gap bytes are included in the upstream frame to allow bursty upstream frame reception in the network device. These bytes can be used by the implementation of the PMD sublayer in the network device (i.e. the upstream burst receiver) to acquire synchronization on the upstream burst. Ramp-up, preamble, ramp-down and gap bytes shall be stripped from the upstream frame by the PMD sublayer implementation before passing it to the TC sublayer implementation in the network device. The sync bytes however, shall be maintained to allow in-band synchronization of the upstream frames
See section 7.6.1.6 for a description of PMD sublayer functionalities regarding ramp-up, preamble, sync, ramp-down and guard time.
Byte 0: Ramp-up
The ramp-up byte is introduced to provide a ramp-up transition time for transmitter activation at the beginning of the upstream burst.
The Ramp-up byte shall be set to the fixed value 40hex.

 © ISO/IEC 1999 - All rights reserved

--`,,```,,,,````-`-`,,`,,`,`,,`---

Copyright International Organization for Standardization
Provided by IHS under license with ISO
No reproduction or networking permitted without license from IHS Not for Resale

Byte 1-3: Preamble 1, Preamble 2 and Preamble 3
The Preamble 1 byte shall be set to the fixed value of 44hex.
The Preamble 2 byte shall be set to the fixed value of 4Bhex.
The Preamble 3 byte shall be set to the fixed value of 77hex.
Byte 4-5: Sync 1 and Sync 2
The Sync 1 byte shall be set to the fixed value of 4Bhex.
The sync 2 byte shall be set to the fixed value of 77hex.
Byte 6: Data Link Address
The Data Link Address byte indicates the user device identification (Device ID) of the user device from which the Data Link Data byte (and thus the complete upstream frame) is sourced. It also holds the COM[3..0] command bits.

bit 7	bit 6	bit 5	bit 4	bit 3	bit 2	bit 1	bit 0
COM[3]	COM[2]	COM[1]	COM[0]	ID[3]	ID[2]	ID[1]	ID[0]

The Command Bits interpretation shall be:

0	Idle command
1	Sign-on upstream frame
2-14	Reserved
15	Data Link Byte = User Data

The Device ID shall only take the values 1 up to 14. In case the frame was granted for user devices which don't have an ID yet (sign-on grant, GC bit=1, see section 7.6.2.1.4), the Data Link Address device ID shall be set to the grant value the user device responds to (also in the 1 to 14 range).
Byte 7: Data Link Data
The Data Link Data byte shall be made available by the deframer implementation for further processing at the TC layer level in the network device. Up to 14 parallel upstream Data Link channels shall be processed in the network device, depending on the number of active User Device IDs.

bit 7	bit 6	bit 5	bit 4	bit 3	bit 2	bit 1	bit 0
DL[7]	DL[6]	DL[5]	DL[4]	DL[3]	DL[2]	DL[1]	DL[0]

Byte 8: Alarm/Control

bit 7	bit 6	bit 5	bit 4	bit 3	bit 2	bit 1	bit 0
AIS	Reserved	Reserved	HIST	U_HDR	C_HDR	U_PLD	C_PLD

AIS = 0 shall indicate normal operation (valid frame payload).
AIS = 1 shall indicate alarm status (invalid frame payload).
Reserved bits shall be set to 0.
A user device shall allocate U_HDR, C_HDR, U_PLD, C_PLD to every downstream superframe it receives:

The U_HDR(n) bit shall be set to 1 if and only if at least one uncorrectable frame header error has been received in the nth downstream superframe.

The C_HDR(n) bit shall be set to 1 if and only if at least one correctable frame header error has been received in the nth downstream superframe.

The U_PLD(n) bit shall be set to 1 if and only if at least one uncorrectable payload error has been received in the deinterleaved $(n\text{-}d)^{th}$ downstream superframe.

The C_PLD(n) bit shall be set to 1 if and only if at least one correctable payload error has been received in the deinterleaved $(n\text{-}d)^{th}$ downstream superframe.

Since the payload of the superframes has to be interleaved before any error can be reported on in the upstream direction, a delay of a fixed number (d) of downstream superframes is introduced in the definition of the U_PLD(n) and C_PLD(n) bits. The delay of d downstream superframes is matched to the deinterleaving delay (function of M parameter) and shall be defined as:

$$d = \left\lceil \frac{M * (I-1) * I}{12 * N * (\#DS / SF)} \right\rceil + 1$$

where $\lceil\ \rceil$ denotes truncating to the higher integer, the M, I and N parameters are as defined in Section 7.6.2.3 and the (#DS/SF) parameter is as defined in Section 7.6.2.1.

--`,,```,,,,````-`-`,,`,,`,`,,`---

Copyright International Organization for Standardization
Provided by IHS under license with ISO
No reproduction or networking permitted without license from IHS Not for Resale

Deinterleaving a superframe shall be defined as replacing the payload bytes of the interleaved superframe by deinterleaved payload bytes according to the one-byte-in one-byte-out principle, as shown in Figure 7.6-40.
In case a user device is transmitting an upstream frame in the $(n+1)^{st}$ superframe, it shall copy the U_HDR(n), C_HDR(n), U_PLD(n) and C_PLD(n) bits into this upstream frame.
In addition, in case the previous upstream frame was transmitted in the $(n-k)^{th}$ superframe, the HIST bit shall be defined as (logical OR):

HIST = OR { U_HDR(i) OR U_PLD(i) OR C_HDR(i) OR C_PLD(i) }, i = n-k....n-1.

The history bit (HIST) flags errors found in downstream superframes which could not be flagged immediately because the user device did not find in these downstream superframes a grant matching its Device ID.

Byte 9: Queue Depth

The Queue Depth byte shall indicate the fullness of the upstream ATM cell queue in the user device. The network device upstream bandwidth management shall allocate grants to a user device, depending on the Queue Depth indication QD[3..0].
The user device shall implement a relationship between QD[3..0] and the actual queue filling level (QFL) of its output cell queue as shown in Table 7-16. Partial cells shall not be accounted for.
The bits PR[3..0] shall be set to 0, indicating priority indication is not supported in this version of the Physical Interface specification.

bit 7	bit 6	bit 5	bit 4	bit 3	bit 2	bit 1	bit 0
PR[3]	PR[2]	PR[1]	PR[0]	QD[3]	QD[2]	QD[1]	QD[0]

Table 7-16 - Queue Depth to Queue Filling Level relationship.

QD	0	1	2	3	4	5	6	7
QFL	0	1	2	3	4	5	6	7

QD	8	9	10	11	12	13	14	15
QFL	≥8	≥16	≥32	≥64	≥128	≥256	≥512	≥1024

Byte 63-70: FEC

The 8 FEC bytes shall be calculated over the bytes 6 to 62 (upstream frame header and payload), using a (65,57) Reed-Solomon code. Bytes 6 to 70 of the upstream frame shall compose an RS(65,57) code word, with byte 6 being the most significant byte of the code word and byte 70 being the least significant byte of the code word.
The network device shall use the error correcting capability to correct up to 4 bytes per upstream frame.
The Reed-Solomon code generator polynomial and field generator polynomial shall be as described in section 7.6.2.3 with N and K set to implement an RS(65,57) code.

Byte 71: Ramp-down

The ramp-down byte is introduced to provide a ramp-down transition time for transmitter shutdown at the end of the upstream burst.
The Ramp-down byte can be set to an arbitrary value.

Byte 72-74.9375: Gap

The Gap bytes provide a guard time between consecutive upstream bursts from different user devices. Since the cable length between the network device and each of the user devices may vary, the upstream burst position within the upstream frame can be jittered. The guard time is such that consecutive upstream bursts do not overlap. The guard time is 5.2% of the total upstream frame period.

7.6.2.3 Reed-Solomon Codes and Convolutional Interleaving

7.6.2.3.1 Reed-Solomon Codes

Reed-Solomon (RS) error correction codes operate on byte streams. The codes are expressed by convention as two numbers, the first indicating the total code word length (N), and the second indicating the number of data bytes (K). The difference between these two numbers (N-K) is the number of FEC bytes.
The RS codes used for downstream and upstream header protection and for downstream and upstream payload protection shall use as generator polynomial:

 © ISO/IEC 1999 - All rights reserved

--`,,```,,,,````-`-`,,`,,`,`,,`---

Copyright International Organization for Standardization
Provided by IHS under license with ISO
No reproduction or networking permitted without license from IHS Not for Resale

$$g(x) = \prod_{i=0}^{N-K-1}(x + \mu^i)$$

where μ is a root of the binary primitive polynomial:

$$x^8 + x^4 + x^3 + x^2 + 1$$

A data byte is identified within the Galois Field (256), the finite field with 256 elements as:

$$(d_7 d_6 d_5 d_4 d_3 d_2 d_1 d_0) \Leftrightarrow \sum_{n=0}^{7} d_n \mu^n \Leftrightarrow \mu^p \qquad (\mu=02\text{hex}),$$

with a one-to-one mapping of byte values and a particular power-of-μ, since μ is a root of the binary primitive polynomial.
An RS(N,K) code word shall be defined as a function of the K data bytes as:

$$[x^{N-K}(\sum_{i=0}^{K-1}\mu^{p(i)}x^i)] + [x^{N-K}(\sum_{i=0}^{K-1}\mu^{p(i)}x^i)] \; MOD\, g(x)$$

where the K most significant bytes (coefficients of x^n, n=N-K..N-1) correspond to the K input data bytes, and the N-K least significant bytes (coefficients of x^n, n=0..N-K-1) correspond to the N-K output FEC bytes.
Because the data byte identification is defined within the Galois Field with 256 elements, RS(N,K) encoding/decoding shall be implemented as a shortened RS(255,255-N+K) code. At the encoder side, 255-N bytes, all set to 0, are appended before the K data bytes at the input of the RS(255,255-N+K) RS encoder. These appended bytes are discarded after the encoding procedure.
The error correcting power of an RS code word is related to the number of FEC bytes in the code word. The number of bytes "t" which can be corrected per code word is defined as t = ⌊(N-K)/2⌋, where ⌊x⌋ denotes truncating to the lower integer.

7.6.2.3.2 Convolutional Interleaving

To increase the correction power of the RS codes, the code words can be interleaved before transmission. The convolutional interleaver is defined by two parameters (see also [ANSI T1.413]):

I interleaver block length
D interleaving depth

The block length (I) is equal to or a submultiple of the Reed-Solomon code word length (N). The convolutional interleaver uses a memory in which a block of I bytes is written while an (interleaved) block of I bytes is read. The interleaving depth (D) is the number of blocks (I bytes each) kept in the interleaver memory to perform the convolutional interleaving. The same interleaving memory (D*I bytes) is needed for interleaving and deinterleaving.
The convolutional interleaving introduces an absolute read to write delay which increments linearly with the byte index within a block of I bytes:

read/write delay (bytes) (D-1)*j with j = 0 .. I-1.

A simplified implementation of convolutional interleaving can be achieved when the read to write delay increment (D-1) is a multiple of the interleaver block length (I). The (D-1) to I ratio is the Interleaving Depth Parameter (M). The characteristics of convolutional interleaving are shown in Table 7-17. An example of (de)interleaver parameter settings I and M is shown in Table 7-18.

Copyright International Organization for Standardization
Provided by IHS under license with ISO
No reproduction or networking permitted without license from IHS Not for Resale

Table 7-17 - Characteristics of Convolution Interleaving.

Parameter	Definition
Interleaver Block Length (I)	I bytes (equal to or submultiple of N)
Interleaving Depth (D)	M * I + 1 blocks of I bytes
(De)interleaver Memory Size	M * I * (I - 1) / 2 bytes
Erasure Correction	$\lfloor t * I / N \rfloor * (M * I + 1)$ bytes
End-to-End Delay	M * I * (I - 1) bytes

Note: In the table above, N and t relate to the RS code word.

Table 7-18 - Example of (I,M) parameter setting for different bit rates.

Downstream bit rate	Interleaver Parameters (I, M)	Interleaving Depth (D)	(De)interleaver Memory Size	Erasure Correction	End-to-End Delay
51.84 Mbit/s	I=33 M=31	1024 blocks of 33 bytes	16368 bytes	2048 bytes 316 μs	32736 bytes 5.1 msec
25.92 Mbit/s	I=33 M=15	496 blocks of 33 bytes	7920 bytes	992 bytes 306 μs	15840 bytes 4.9 msec
12.96 Mbit/s	I=33 M=8	232 blocks of 33 bytes	3696 bytes	464 bytes 287 μs	7392 bytes 4.6 msec

Note 1: The example in the table above does not take into account the header bytes of the downstream frame.

Note 2: For the example in the table above, the M parameter is chosen to correct erasures of about 300 μs. Depending on the physical medium and the impulse noise conditions, another value might be more appropriate.

The example in Figure 7.6-40 shows I=7. I parallel branches (numbered 0..I-1) are implemented with a delay increment of M per branch. Each branch is a FIFO shift register (delay line) with length 0*M..(I-1)*M bytes. The deinterleaver is similar to the interleaver, but the branch indexes are reversed so that the largest interleaver delay corresponds to the smallest deinterleaver delay. Deinterleaver synchronization is achieved by routing the first byte of an interleaved block of I bytes into branch 0.

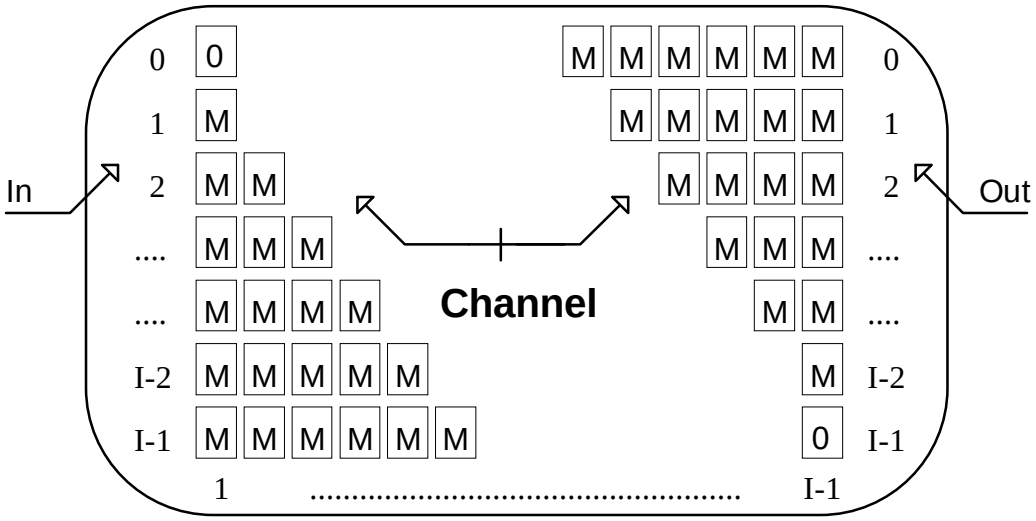

Figure 7.6-40 - Implementation example with D-1 = M*I and I=7.

7.6.2.4 Time Division Multiple Access (TDMA) Scheme

To be able to connect multiple user devices to the network device (point-to-multipoint), a TDMA scheme is provided. A user device can only transmit upstream grants in the upstream slots it has been granted access to (see

 © ISO/IEC 1999 - All rights reserved

Copyright International Organization for Standardization
Provided by IHS under license with ISO
No reproduction or networking permitted without license from IHS
Not for Resale

grant byte definition). Whenever the grant corresponding with a time slot matches the Device Identification number of a user device, the user device is allocated the slot.
A user device boot, the user device shall perform the following steps to get a Device ID assigned:

1. The user device performs power-up
2. The user device locks onto the downstream frame
3. The user device chooses a power level of max 0 dBm
4. The user device waits for a sign-on grant (Device ID = 1-14, GC bit = 1)
5. The user device accepts the sign-on grant as its Device ID and transmits an upstream sign-on burst with
   COM[3..0] = 0001 (sign-on command)
   ID[3..0] = accepted grant value as Device ID
   DL Byte
   Alarm/Control
   Queue Depth
   Payload is don't care (arbitrary)
6. The user device monitors the ACK bit (see section 7.6.2.1.4) to see if the sign-on burst was received by the network device. If the sign-on burst failed, the user device increases the transmit power with at max 1 dB, skips a random number of sign-on grants (0..7) and goes back to point 4. If the sign-on burst succeeded, the user device considers itself as signed-on and shall from this moment on only respond to the allocated Device ID.

When a sign-on burst succeeds (no unrecoverable errors), the network device shall start generating (non-collision) grants for the allocated Device ID. The time in-between two consecutive grants for a particular Device ID of a particular signed-on User Device shall not be higher than 125ms.

7.6.2.5 Cell Specific TC Sublayer Functions

7.6.2.5.1 HEC Generation/Verification

The HEC Generation and Verification described in this section, shall apply to both the downstream and upstream transmission of ATM cells.
The entire header (including the HEC byte) shall be protected by the Header Error Control (HEC) sequence. The HEC code shall be contained in the last byte of the ATM header.
The HEC sequence shall be capable of:

- single bit error correction
- multiple-bit error detection

Error detection in the ATM header shall be implemented as defined in [ITU-T I.432].
The HEC byte shall be generated as described in [ITU-T I.432], including the recommended modulo-2 addition (XOR) of the pattern 01010101b to the HEC bits.
The generator polynomial coefficient set used and the HEC sequence generation procedure shall be in accordance with [ITU-T I.432].

7.6.2.5.2 Cell Randomization and Derandomization

ATM cell randomization permits the randomization of the cell payload to avoid continuous non-variable bit patterns and improve the efficiency of the cell delineation algorithm.
The downstream ATM cell randomizer polynomial and procedures shall be as defined in [ITU-T I.432] for SDH based transmission.
Upstream ATM cell randomization shall not be applied.

7.6.2.5.3 Cell Delineation

The cell delineation function permits the identification of the cell boundaries in the payload. It is based on a coding law using the Header Error Control (HEC) field in the cell header.
The ATM cell delineation algorithm implemented in the ATM user device (downstream data reception), including the cell delineation state transitions, shall be as described in [ITU-T I.432] (see Figure 7.6-41):

- Transition of "Sync" to "Hunt" state when coding law is violated at the expected position 7 times consecutively.
- Transition of "Presync" to "Sync" state when coding law is confirmed at the expected position 6 times consecutively

Copyright International Organization for Standardization
Provided by IHS under license with ISO
No reproduction or networking permitted without license from IHS Not for Resale

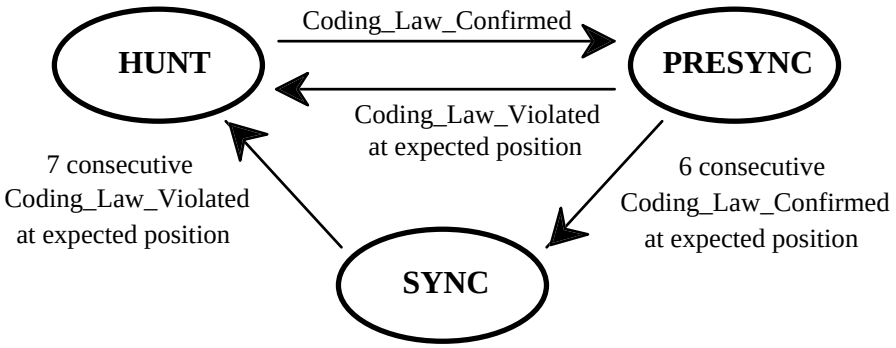

Figure 7.6-41 - ATM cell delineation state machine.

Upstream media access is performed on cell basis. Therefore, the cell delineation implemented in the network device (upstream data reception) is performed through the upstream framing, as described in section 7.6.2.2. Therefore, the implementation of an ATM cell based delineation in the network device is not needed.

7.7 Passband Unidirectional PHY on coax

This Physical Layer Interface supports unidirectional transmission over radio frequency coax (up to 1GHz bandwidth). It is referred to as QAM-link on HFC (Hybrid Fiber Coax).
This Physical Layer Interface describes the complete physical layer structure, i.e. framing structure, channel coding and modulation for the carriage of S1 and S2 information flow. Physical layer and framing specifications are common to both information flows.
Two frame structures are provided for downstream data transmission. One is carrying MPEG-2 Transport Stream packets and the other is carrying ATM cells. Each of these framing structures shall be used uniquely per RF carrier. The STB shall support at least one of these framing structures.
A summary of the spectrum allocation for the unidirectional PHY on coax is depicted in Figure 7.7-1.
The receiver in the STB shall operate over the entire specified frequency range. The transmitter in the access node shall operate within the specified frequency range.

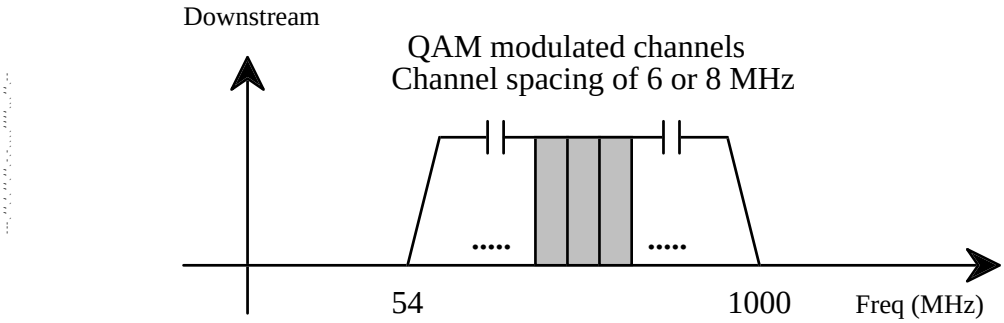

Figure 7.7-1 - Spectrum allocation for the unidirectional PHY on coax.

For the unidirectional PHY on coax, a combination of quadrature amplitude modulation (QAM) and a multi-rate framing structure is specified. QAM is specified due to its performance characteristics with respect to spectral efficiency. Three levels of modulation, 16 QAM, 64 QAM and 256 QAM, are defined to allow flexible implementation.

7.7.1 Encoding/Decoding Process

The processes in the following subclauses shall be applied as shown in Figure 7.7-2.

 © ISO/IEC 1999 - All rights reserved

Copyright International Organization for Standardization
Provided by IHS under license with ISO
No reproduction or networking permitted without license from IHS
Not for Resale

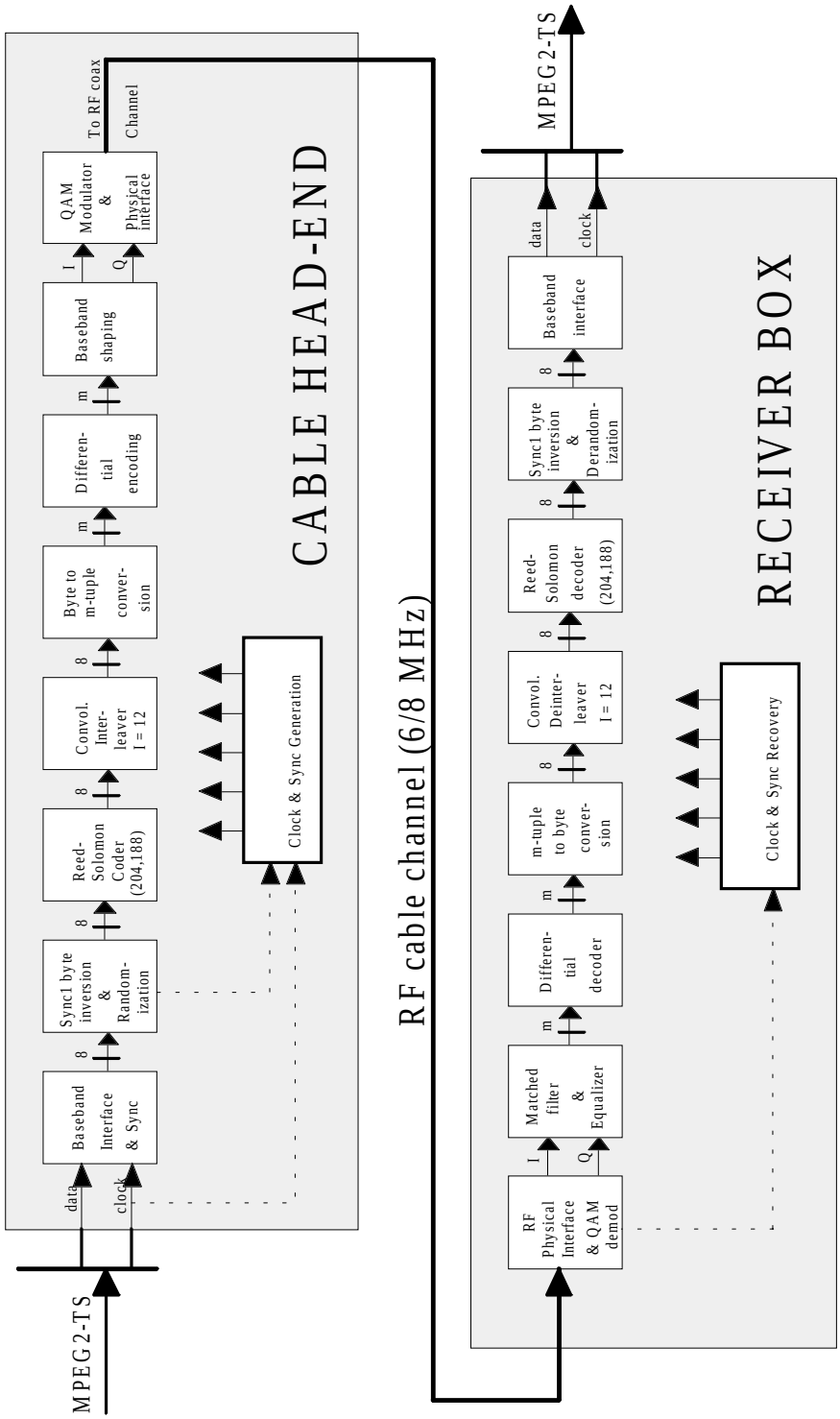

Figure 7.7-2 - Conceptual block diagram of elements at the cable head-end and receiving site.

7.7.1.1.1.1 Baseband interfacing and sync

This unit shall adapt the data structure to the format of the signal source. The framing structure shall be in accordance with MPEG-2 Transport Stream (including sync bytes).

Copyright International Organization for Standardization
Provided by IHS under license with ISO
No reproduction or networking permitted without license from IHS
Not for Resale

7.7.1.1.1.2 Sync 1 inversion and randomization

This unit shall invert the Sync 1 byte according to the MPEG-2 framing structure, and randomizes the data stream for spectrum shaping purposes.

7.7.1.1.1.3 Reed-Solomon (RS) coder

This unit shall apply a shortened Reed-Solomon (RS) code to each randomized transport packet to generate an error-protected packet. This code shall also be applied to the Sync byte itself.

7.7.1.1.1.4 Convolutional interleaver

This unit shall perform a convolutional interleaving of the error-protected packets with I=12/M=17 (for 16 and 64 QAM) and I=204/M=1 (for 256 QAM). The periodicity of the sync bytes shall remain unchanged.
To allow for sufficiently low loop delay for the contention slot acknowledgment in the IB signaling case., the depth of the 256 QAM interleaver can be 12 or 34 rather than the depth of 204.

7.7.1.1.1.5 Byte to m-tuple conversion

This unit shall perform a conversion of the bytes generated by the interleaver into QAM symbols.

7.7.1.1.1.6 Differential encoding

In order to get a rotation-invariant constellation, this unit shall apply a differential encoding of the two Most Significant Bits (MSBs) of each symbol.

7.7.1.1.1.7 Baseband shaping

This unit performs mapping from differentially encoded m-tuples to I and Q signals and a square-root raised cosine filtering of the I and Q signals prior to QAM modulation.

7.7.1.1.1.8 QAM modulation and Physical Interface

This unit performs QAM modulation. It is followed by interfacing the QAM modulated signal to the Radio Frequency (RF) cable channel.

7.7.1.1.1.9 Cable receiver

A System receiver shall perform the inverse signal processing, as described for the modulation process above, in order to recover the baseband signal.

7.7.2 MPEG-2 Transport Stream

The MPEG-2 Transport Stream is defined in [ISO/IEC 13818-1]. The Transport Stream for MPEG-2 data is comprised of packets having 188 bytes, with one byte for synchronization purposes, three bytes of header containing service identification, scrambling and control information, followed by 184 bytes of MPEG-2 or auxiliary data.

7.7.3 Asynchronous Transfer Mode (ATM) Stream

The Asynchronous Transfer Mode stream is defined in [ITU-T I.361]. An ATM stream is comprised of packets having 53 bytes, with a five byte header including connection identification and header error control, followed by 48 bytes of ATM payload.

7.7.4 Framing structure when carrying MPEG-2-TS

The framing organization shall be based on the MPEG-2-TS packet structure. The system framing structure shall be as shown in Figure 7.7-3.

 © ISO/IEC 1999 - All rights reserved

Copyright International Organization for Standardization
Provided by IHS under license with ISO
No reproduction or networking permitted without license from IHS Not for Resale

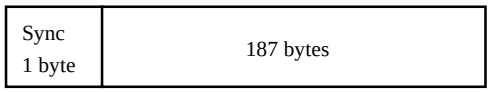

(a) MPEG2-Transport Stream MUX Packet

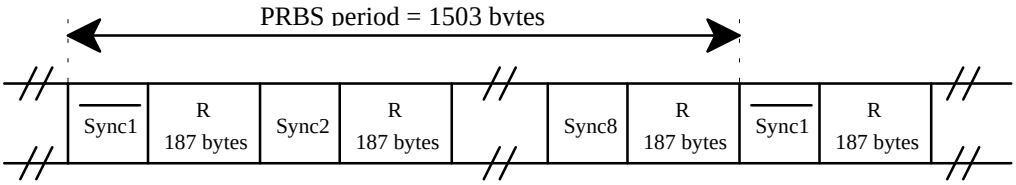

(b) Randomized transport packets: Sync bytes and Randomized Sequence R

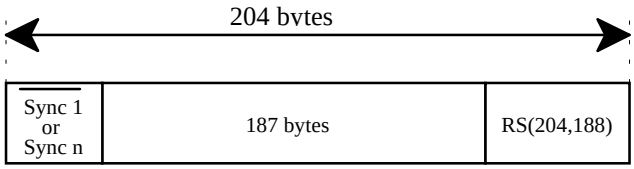

(c) Reed-Solomon RS(204,188, t=8) error protected

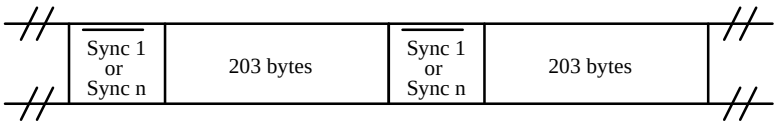

(d) Interleaved packets with Interleaving Depth L
L=12 for 16 and 64QAM, L=12, 34 or 204 for 256QAM

$\overline{\text{Sync 1}}$ = not randomized complemented sync byte
Sync n = not randomized sync byte, n = 2...8

Figure 7.7-3 - Framing structure when carrying MPEG-2-TS.

7.7.4.1 Tool For Carrying MPEG-2 TS and ATM in the Same Multiplex

ATM cells can be carried within the MPEG-2-TS as a Private Data Stream. The PID for the ATM stream is identified by MPEG-2 stream_type 0xC1
The cell delineation function permits the identification of the cell boundaries in the payload. It is based on a coding law using the Header Error Control (HEC) field in the cell header.
The ATM cell delineation algorithm implemented in the ATM user device (downstream data reception), including the cell delineation state transitions, shall be as described in [ITU-T I.432] (see Figure 7.6-41):
An ATM connection is described by the simultaneous use of the Downstream_MPEG_CBD and Downstream_ATM_CBD. The Program_Number and Frequency is obtained from the Downstream_MPEG_CBD. The VPI/VCI is obtained from the Downstream_ATM_CBD. The Downstream_ATM_CBD Frequency shall match the Downstream_MPEG_CBD Frequency; the Downstream_ATM_CBD Type shall be QAM.

7.7.5 Framing structure when carrying ATM

7.7.5.1 Mapping of ATM cells

A framing structure is required to transport ATM over a coax network. This structure provides synchronization for interleaving and FEC block alignment appropriate to the coax environment. This function is similar to that provided by SDH and SONET frames for similar functions related to their respective environments.
This structure supports the carriage of the ATM services needed for DAVIC 1.3.1a functionality. The applicability of this structure to other ATM services would need to be determined on a case by case basis.

Copyright International Organization for Standardization
Provided by IHS under license with ISO
No reproduction or networking permitted without license from IHS Not for Resale

188-byte ATM transport MUX packets shall be used for the carriage of ATM over a coax network. This packet structure provides synchronization and payload. The format of the packet structure is shown in Figure 7.7-4. The steps (b), (c) and (d) shown in Figure 7.7-3 shall also apply to ATM transport MUX packets.

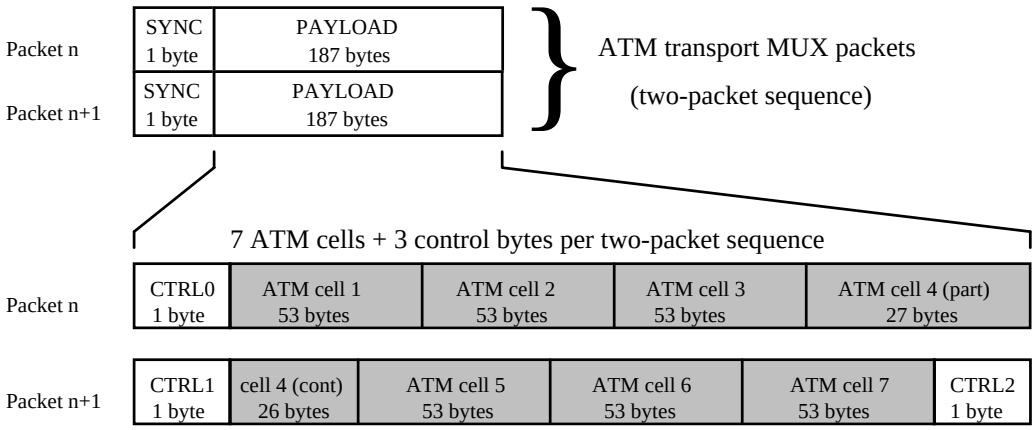

Figure 7.7-4 - Framing structure when carrying ATM.

The fields in the ATM transport MUX packets are defined as:

SYNC — The sync byte is a fixed 8 bit field with value 01000111b used for frame synchronization.

PAYLOAD — This field carries 187 bytes of payload and is described in detail below.

A transmission convergence sublayer is used to map the ATM cells into the payload provided by the frame. Three bytes are defined for this functionality labeled CTRL0, CTRL1, and CTRL2. The alignment of the ATM cells is synchronized to a two packet sequence as shown below. This provides rapid cell delineation and cell delineation recovery after errors. The format is also shown in Figure-4.

CTRL0 — This byte indicates that a packet is the first of the two packet sequence. Its value is E1PSSSSSb where E, P, and S bits are defined below. This also indicates that the first byte of an ATM cell immediately follows.

CTRL1 — This byte indicates that a packet is the second of a two packet sequence. Its value is E0PSSSSSb where E, P, and S bits are defined below.

CTRL2 — This byte is reserved. It will be defined for carriage of operation, administration, and maintenance information (OAM).

Definition of E, P and S bit setting:

E (error) — The transport error indicator is a 1 bit flag. When set to “1”, it indicates that at least 1 uncorrectable bit error exists in the associated packet. This bit may be set to “1” by entities in the transport layer. When set to “1”, this bit shall not be reset to “0” unless the bit value(s) in error have been corrected.

P (priority) — The transport priority is a 1 bit indicator. When set to “1”, it indicates that the associated packet is a greater priority than the packets with the transport priority set to “0”.

SSSSS (stuffing) — This fixed 5 bit field with value 11110b. Any packet without this value should be discarded. This could indicate that the associated packet is used for stuffing purposes and does not contain valid payload. One or more of these packets may be placed anywhere in the stream.

ATM Transport MUX packets and MPEG-2 Transport MUX packets shall have a common physical media dependent sublayer. This means that usage of the High Reliability Marker, channel coding, byte-to-symbol mapping, QAM modulation and baseband filter characteristics shall apply in an identical way to the transport of ATM Transport MUX packets and MPEG-2 Transport MUX packets.

7.7.5.2 Cell specific functionalities

7.7.5.2.1 HEC Generation/Verification

The entire header (including the HEC byte) shall be protected by the Header Error Control (HEC) sequence. The HEC code shall be contained in the last byte of the ATM header.

 © ISO/IEC 1999 - All rights reserved

Copyright International Organization for Standardization
Provided by IHS under license with ISO
No reproduction or networking permitted without license from IHS
Not for Resale

The HEC sequence shall be capable of:

- single bit error correction
- multiple-bit error detection

Error detection in the ATM header shall be implemented as defined in [ITU-T I.432].
The HEC byte shall be generated as described in [ITU-T I.432], including the recommended modulo-2 addition (XOR) of the pattern 01010101b to the HEC bits.
The generator polynomial coefficient set used and the HEC sequence generation procedure shall be in accordance with [ITU-T I.432].

7.7.5.2.2 Cell Randomization and Derandomization

Since the ATM cell boundaries are synchronous to the ATM transport MUX packets, ATM cell (de)randomization is not needed to improve the efficiency of the ATM cell delineation algorithm. Therefore, ATM cell randomization shall not be applied.

7.7.5.2.3 Cell Delineation

Since the ATM cell boundaries are synchronous to the ATM transport MUX packets, the implementation of an ATM cell based delineation is not needed in the STB.

7.7.6 High Reliability Marker (HRM)

The High Reliability Marker (HRM) is system transparent tool that provides improved packet synchronization robustness. It is a transparent tool because the inclusion or exclusion of the HRM does not affect interoperability of DAVIC system components. This transparency is accomplished by the format of the HRM as a field carried in the normal payload area of a standard MPEG-2 Transport Stream (MPEG-2-TS) null packet. The header of the HRM packet shall conform to the MPEG-2-TS null packet definition. The PID of the HRM is assigned a value of 0x1FFF, which is the PID value that is assigned for null packets. The HRM packet is inserted into the MPEG-2 Transport Stream prior to the framing operations of randomization and interleaving.
The inclusion or exclusion of the HRM tool by DAVIC systems components (such as STBs, Delivery components, Servers, etc.) shall not affect the compliance of such components to the DAVIC specifications.
The High Reliability Marker (HRM) consists of a 184 byte Linear Feedback (LFSR) generated pattern. The HRM packet (where HRM packet is defined as an MPEG-2-TS packet which contains the PID value 0x1FFF and the HRM field in the packet payload) is sent in constant intervals of 204 packets. The LFSR generated patterns is defined by the polynomial:

$$x^8 + x^6 + x^5 + x + 1$$

with an initial seed value of 10000000.
The HRM packet is illustrated in Figure 7.7-5.

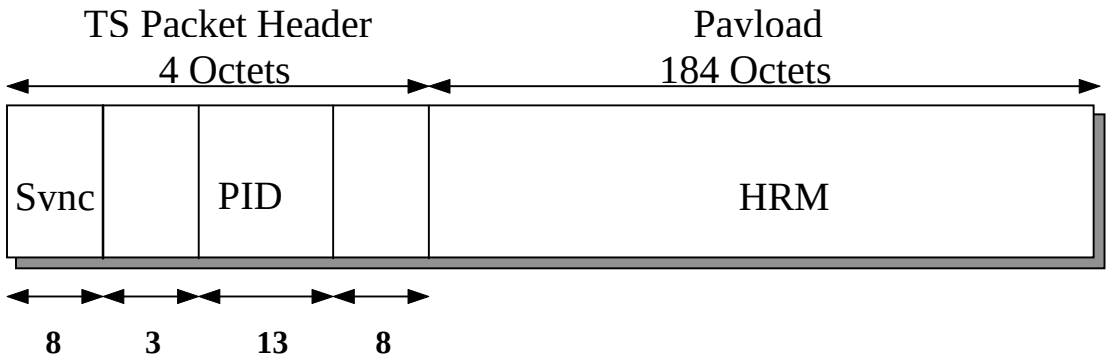

Figure 7.7-5 - HRM Packet

An important feature of the HRM tool is the fact the HRM packet is transparent in DAVIC components which do not utilize the HRM tool, and this transparency allows for full interoperability between DAVIC components which utilize the HRM tools and DAVIC components which do not utilize the HRM tool.
This transparency/interoperability issue is described as follows:
(1) A DAVIC compliant multiplexer which utilizes the HRM tool as part of its multiplex structure will produce an MPEG-2 Transport Stream in which every 204th TS packet is an HRM packet. DAVIC compliant demultiplexers

Copyright International Organization for Standardization
Provided by IHS under license with ISO
No reproduction or networking permitted without license from IHS Not for Resale

that do not utilize the HRM tool will discard the MPEG-2-TS packet which contains the HRM because the null PID value will not be part of any defined program. DAVIC compliant demultiplexers that utilize the HRM tool will accept the MPEG-2-TS packet that contains the HRM, via recognition of the HRM in a designated MPEG-2-TS null packet, and will utilize this information in its packet synchronization algorithm.
(2) A DAVIC compliant multiplexer which do not utilize the HRM tool will generate a MPEG-2 Transport Stream that does not include the HRM packet. DAVIC compliant demultiplexers that do not utilize the HRM tool are unaffected. DAVIC compliant demultiplexers that do utilize the HRM tool will operate without the HRM, although without the additional synchronization robustness that would exist if the HRM was present.

7.7.7 Channel coding

To achieve the appropriate level of error protection required for cable transmission of digital data, a FEC based on Reed-Solomon encoding shall be used. Protection against burst errors shall be achieved by the use of byte interleaving.

7.7.7.1 Randomization for spectrum shaping

The System input stream shall be organized in fixed length packets (see Figure 7.7-3) following the MPEG-2 Transport Stream. The total packet length of an MPEG-2-TS packet is 188 bytes. This includes 1 sync-word byte (i.e. 47hex). The processing order at the transmitting side shall always start from the MSB (i.e. 0) of the sync word-byte (i.e. 01000111).
In order to ensure adequate binary transitions for clock recovery, the data at the output of the MPEG-2-TS multiplexer shall be randomized in accordance with the configuration depicted in Figure 7.7-6.
The polynomial for the Pseudo Random Binary Sequence (PRBS) generator shall be:

$$1 + X^{14} + X^{15}$$

Loading of the sequence "100101010000000" into the PRBS registers, as indicated in Figure 7.7-6, shall be initiated at the start of every eight transport packets. To provide an initialization signal for the derandomizer, the MPEG-2 sync byte of the first transport packet in a group of eight packets shall be bitwise inverted from 47hex to B8hex.

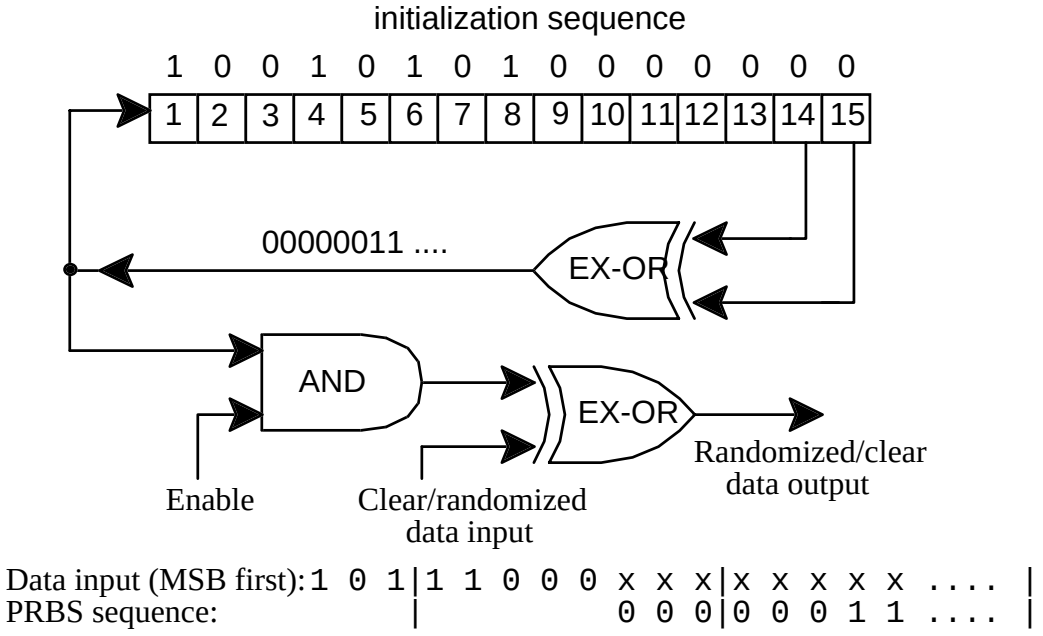

Figure 7.7-6 - Randomizer/derandomizer schematic diagram.

The first bit at the output of the PRBS generator shall be applied to the first bit of the first byte following the inverted MPEG-2 sync byte (i.e.B8hex). To aid other synchronization functions, during the MPEG-2 sync bytes of the subsequent 7 transport packets, the PRBS generation continues, but its output shall be disabled, leaving these bytes unrandomized. The period of the PRBS sequence shall therefore be 1503 bytes.
The randomization process shall be active also when the modulator input bit-stream is non-existent, or when it is non-compliant with the MPEG-2 Transport Stream format (i.e. 1 sync byte + 187 packet bytes). This is to avoid the emission of an unmodulated carrier from the modulator.

 © ISO/IEC 1999 - All rights reserved

Copyright International Organization for Standardization
Provided by IHS under license with ISO
No reproduction or networking permitted without license from IHS
Not for Resale

7.7.7.2 Reed-Solomon coding

Following the energy dispersal randomization process, systematic shortened Reed-Solomon encoding shall be performed on each randomized MPEG-2-TS packet, with T = 8. This means that 8 erroneous bytes per packet can be corrected. This process adds 16 parity bytes to the MPEG-2-TS packet to give a code word (204,188). RS coding shall also be applied to the packet sync byte, either non-inverted (i.e. 47hex) or inverted (i.e. B8hex).
The Reed-Solomon code shall have the following generator polynomials:
Code Generator Polynomial: $g(x) = (x+\mu^0)(x+\mu^1)(x+\mu^2) \ldots (x+\mu^{15})$, where $\mu = 02$hex
Field Generator Polynomial: $p(x) = x^8 + x^4 + x^3 + x^2 + 1$
The shortened Reed-Solomon code shall be implemented by appending 51 bytes, all set to zero, before the information bytes at the input of a (255,239) encoder; after the coding procedure these bytes are discarded.

7.7.7.3 Convolutional interleaving

Following the scheme of Figure 7.7-7, convolutional interleaving shall be applied to the error protected packets (see Figure 7.7-3 (c)). This results in an interleaved frame (see Figure 7.7-3 (d)).
The convolutional interleaving process shall be based on the Forney approach, which is compatible with the Ramsey type III approach, with I=12 (for 16 and 64-QAM) and I=12, 34 or 204 (for 256-QAM). The Interleaved frame shall be composed of overlapping error protected packets and shall be delimited by MPEG-2 sync bytes (preserving the periodicity of 204 bytes).
The interleaver is composed of I branches, cyclically connected to the input byte-stream by the input switch. Each branch shall be a First In First Out (FIFO) shift register, with depth (M * j) cells (where M = N/I, N = 204 = error protected frame length, I = 12 = interleaving depth, j = branch index). The cells of the FIFO shall contain 1 byte, and the input and output switches shall be synchronized.
For synchronization purposes, the sync bytes and the inverted sync bytes shall be always routed into the branch "0" of the interleaver (corresponding to a null delay).
The deinterleaver is similar, in principle, to the interleaver, but the branch indexes are reversed (i.e. j = 0 corresponds to the largest delay). The deinterleaver synchronization is achieved by routing the first recognized sync byte into the "0" branch.

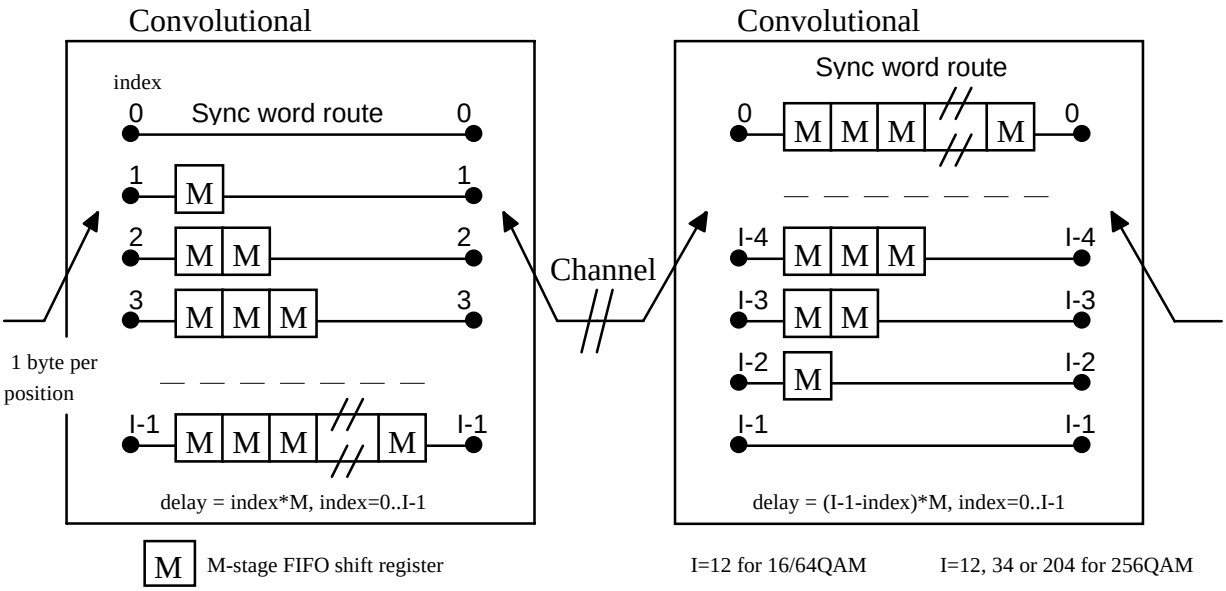

Figure 7.7-7 - Conceptual diagram of the convolutional interleaver and de-interleaver.

7.7.8 Byte to symbol mapping

After convolutional interleaving, an exact mapping of bytes into symbols shall be performed. The mapping shall rely on the use of byte boundaries in the modulation system.
In each case, the MSB of symbol Z shall be taken from the MSB of byte V. Correspondingly, the next significant bit of the symbol shall be taken from the next significant bit of the byte. For the case of 2^m-QAM modulation, the process shall map **k** bytes into **n** symbols, such that:
$8\ k = n\ .\ m$

© ISO/IEC 1999 - All rights reserved

Copyright International Organization for Standardization
Provided by IHS under license with ISO
No reproduction or networking permitted without license from IHS
Not for Resale

The process is illustrated for the case of 64-QAM (where m = 6, k = 3 and n = 4) in Figure 7.7-8.

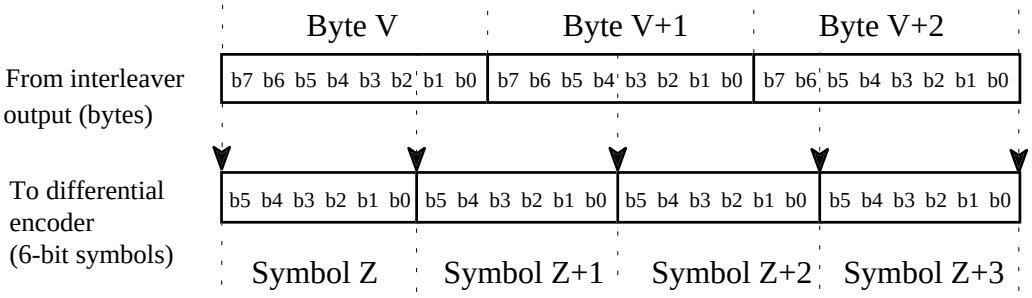

NOTE 1: b0 shall be understood as being the Least Significant Bit (LSB) of each byte or m-tuple.

NOTE 2: In this conversion, each byte results in more than one m-tuple, labeled Z, Z+1, etc. with Z being transmitted before Z+1.

Figure 7.7-8 - Byte to m-tuple conversion for 64-QAM

The two most significant bits of each symbol shall then be differentially coded in order to obtain a π/2 rotation-invariant QAM constellation. The differential encoding of the two MSBs shall be given by the following Boolean expression:

$$I_k = \overline{(A_k \oplus B_k)}.(A_k \oplus I_{k-1}) + (A_k \oplus B_k).(A_k \oplus Q_{k-1})$$

$$Q_k = \overline{(A_k \oplus B_k)}.(B_k \oplus Q_{k-1}) + (A_k \oplus B_k).(B_k \oplus I_{k-1})$$

Note: For the above Boolean expression "$\oplus$" denotes the EXOR function, "+" denotes the logical OR function, "." denotes the logical AND function and the overstrike denotes inversion.

Figure 7.7-9 gives an example of implementation of byte to symbol conversion.

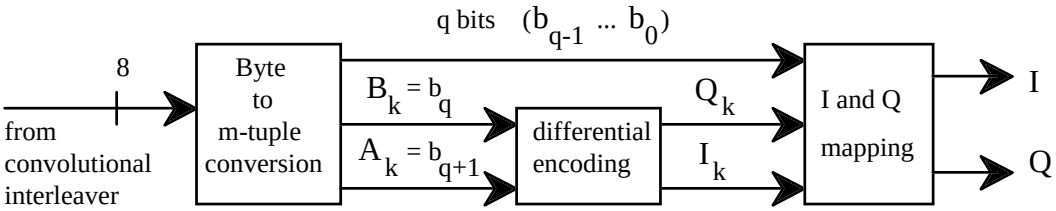

q=2 for 16QAM, q=4 for 64QAM, q=6 for 256QAM

Figure 7.7-9 - Example implementation of the byte to m-tuple conversion and the differential encoding of the two MSBs.

7.7.9 Quadrature Amplitude Modulation (QAM)

Quadrature amplitude modulation (QAM) is used as a means of encoding digital information over wireline, or fiber transmission links. The method is a combination of amplitude and phase modulation techniques. QAM is an extension of multiphase phase shift keying which is a type of phase modulation. The primary difference between the two is the lack of a constant envelope in QAM versus the presence of a constant envelope in phase shift keying techniques. The technique is used as a result of its performance with respect to spectral efficiency. QAM is closely related to the original non-return-to-zero (NRZ) baseband transmission. All QAM versions can be formed by generating two multilevel pulse sequences from the initial NRZ sequence, and applying these to two carriers that are offset by a phase shift of 90 degrees. Each modulated carrier then yields an AM signal with suppressed carrier. Since carrier multiplication in the time domain corresponds to a shift in the frequency domain, the modulated spectrum maintains the shape of the two-sided baseband signal spectrum.

 © ISO/IEC 1999 - All rights reserved

Copyright International Organization for Standardization
Provided by IHS under license with ISO
No reproduction or networking permitted without license from IHS
Not for Resale

The spectrum of a QAM system is determined by the spectrum of the baseband signals applied to the quadrature channels. Since these signals have the same basic structure as the baseband PSK signals, QAM spectrum shapes are identical to PSK spectrum shapes with equal numbers of signal points.
Even though the spectrum shapes are identical, the error performances of the two systems are quite different. With large numbers of signal points, QAM systems always outperform PSK systems. The basic reason is that the distance between signal points in a PSK system is smaller than the distance between points in a comparable QAM system.
QAM can have any number of discrete digital levels. Common levels are 4 QAM, 16 QAM, 64 QAM and 256 QAM. It is based on amplitude modulation of "quadrature" carriers, 90 degrees out of phase with each other. For the DAVIC specification, 16 QAM, 64 QAM and 256 QAM levels are defined.
The implementation of the QAM (de)modulator shall comply to the specifications given in Table 7-19.

Table 7-19 - Specifications for QAM Modulation

Modulation	16, 64, 256 QAM rotationally invariant coding. Two grades of QAM level are defined: Grade — QAM Level A — 16 and 64 B — 16 and 64 and 256 A QAM modulator (transmitter) shall support at least one of the QAM levels: 16, 64 or 256. A QAM demodulator (receiver) shall support A or B grade of QAM level.
Carrier Frequency	6 MHz or 8 MHz spacing is applied.
Carrier Frequency Accuracy	+/- 20 parts per million (ppm) for 16, 64 and 256-QAM measured at the upper limit of the frequency range
Frequency Range	54 MHz - 1 GHz. The receiver shall operate over the entire specified frequency range.
Symbol Rate	6 MHz: The STB shall support at least one rate within the 5-5.304 Mbaud symbol rate range. For systems that support inband signaling for upstream control, the value shall be a multiple of 8 kbaud. (Informative: The recommended value is 5.304 Mbaud) 8MHz: The STB shall support at least one rate within the 6-6.952 Mbaud symbol rate range. For systems that support inband signaling for upstream control, the value shall be a multiple of 8 kbaud (Informative: The recommended value is 6.952 Mbaud)
Phase Noise	<-75 dBc/Hz @ 1 kHz <-85 dBc/Hz @ 10 kHz <-100 dBc/Hz @ 100 kHz and above
Signal Element Coding	Differential quadrant coding and Gray coding within quadrant
Transmitted Spectrum	Square root raised cosine approximation. Roll-off factor: $\alpha = 0.13$ (for 6 MHz) or $\alpha = 0.15$ (for 8 MHz).
Modulation I/Q amplitude imbalance	< 0.2 dB
Modulation I/Q timing misalignment	< 0.02 T (T = Symbol Period)
Modulation quadrature imbalance	< 1.0 degree
Receive Level at the RF physical interface input (per QAM downstream in-band channel)	16,64-QAM: 52 - 80 dBmicroV (RMS) (75 Ohm) 256-QAM: 62 - 80 dBmicroV (RMS) (75 Ohm)
C/N at the demodulator input (white noise)	16,64-QAM: ≥ 30 dB @ BER<1x10E-12 (after error correction) 256-QAM: ≥ 36 dB @ BER<1x10E-12 (after error correction) (i.e. 1 error in 7 hours at 40 Mbit/s)
Power Level differences between digital QAM channels (RMS) and analog channels (peak)	16,64-QAM: -10 to 0 dB 256-QAM: -6 to 0 dB
Adjacent Channel level	≤ 3 dB (same QAM channels types) ≤ 6 dB (different QAM channels types; only for the case 16/64-QAM adjacent to a 256-QAM)

The modulation of the System shall be Quadrature Amplitude Modulation (QAM) with 16, 64 or 256 points in the constellation diagram.

Copyright International Organization for Standardization
Provided by IHS under license with ISO
No reproduction or networking permitted without license from IHS Not for Resale

The System constellation diagrams for 16-QAM, 64-QAM and 256-QAM shall be as given Figure 7.7-10, Figure 7.7-11, and Figure 7.7-12 (Figure 7.7-13 for I = 12) respectively.
As shown in the constellation diagrams, the constellation points in Quadrant 1 shall be converted to Quadrants 2, 3 and 4 by changing the two MSB (i.e. I_k and Q_k) and by rotating the q LSBs according to the following rule given in Table 7-20.

Table 7-20 - Conversion of constellation of quadrant 1 to other quadrants of the constellation diagrams given in Figure 7.7-10, Figure 7.7-11, Figure 7.7-12 and Figure 7.7-13.

Quadrant	MSBs	LSBs rotation
1	00	0
2	10	+ π/2
3	11	+ π
4	01	+ 3π/2

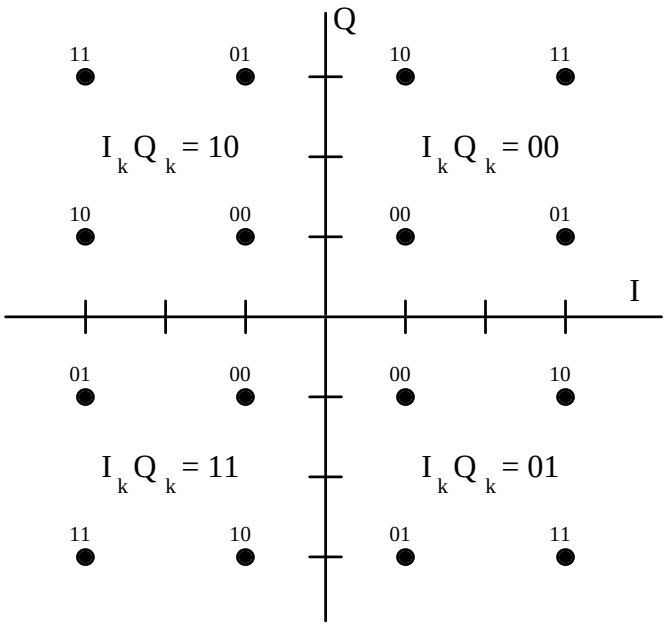

Figure 7.7-10 - 16 QAM Constellation diagram

 © ISO/IEC 1999 - All rights reserved

--`,,```,,,,````-`-`,,`,,`,`,,`---

Copyright International Organization for Standardization
Provided by IHS under license with ISO
No reproduction or networking permitted without license from IHS
Not for Resale

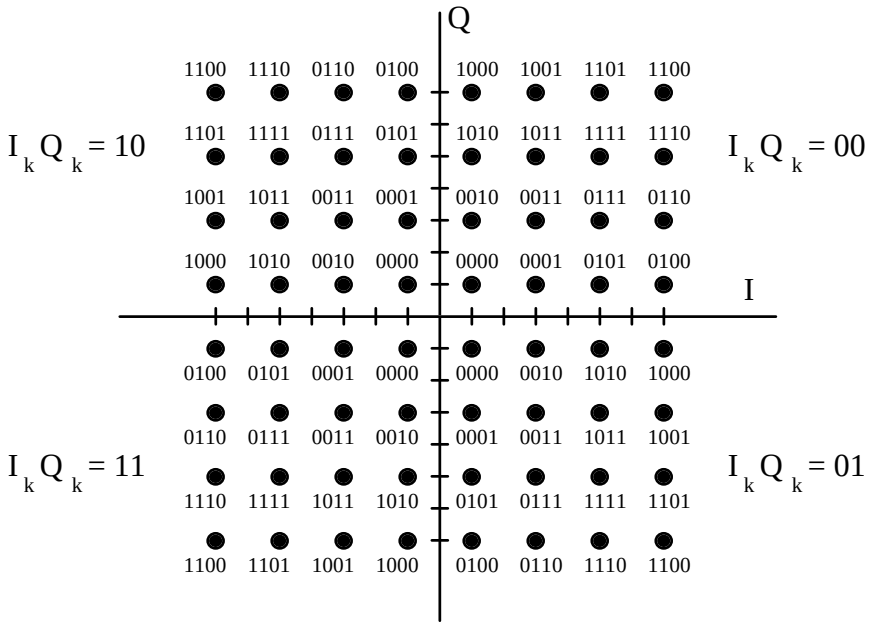

Figure 7.7-11 - 64 QAM Constellation Diagram

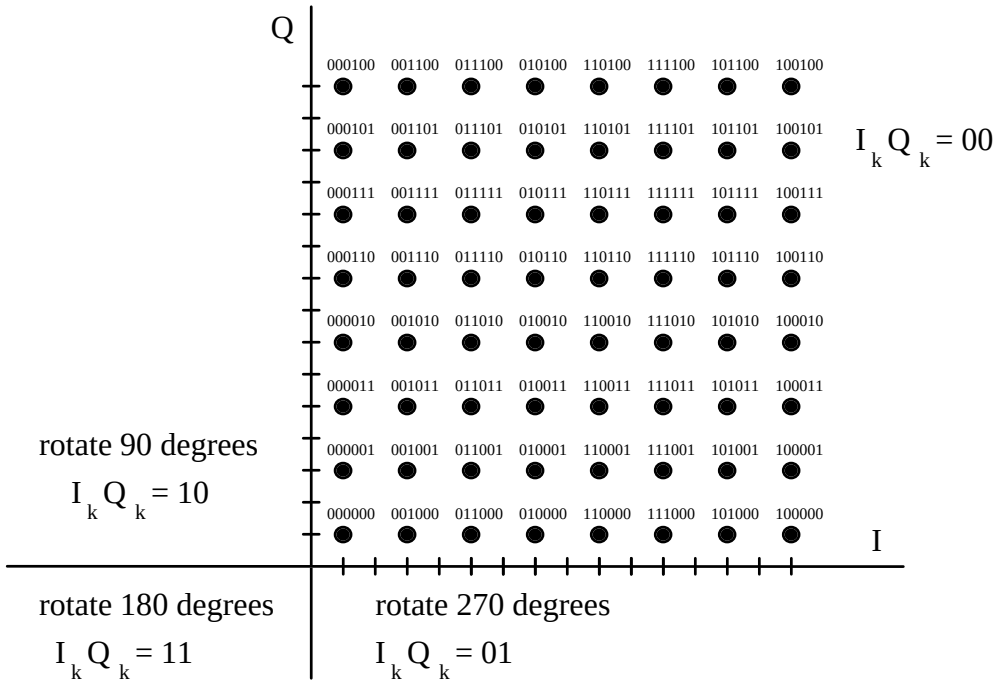

Figure 7.7-12 - 256 QAM Constellation Diagram. IkQk are the two MSBs in each quadrant and should be prepended to the constellation values to complete the 8-bit value.

When the I=12 interleaver is used for 256 QAM, the following constellation shall be used. The same scheme as described above shall be applied to obtain the constellations points in the other 3 quadrants.

Copyright International Organization for Standardization
Provided by IHS under license with ISO
No reproduction or networking permitted without license from IHS
Not for Resale

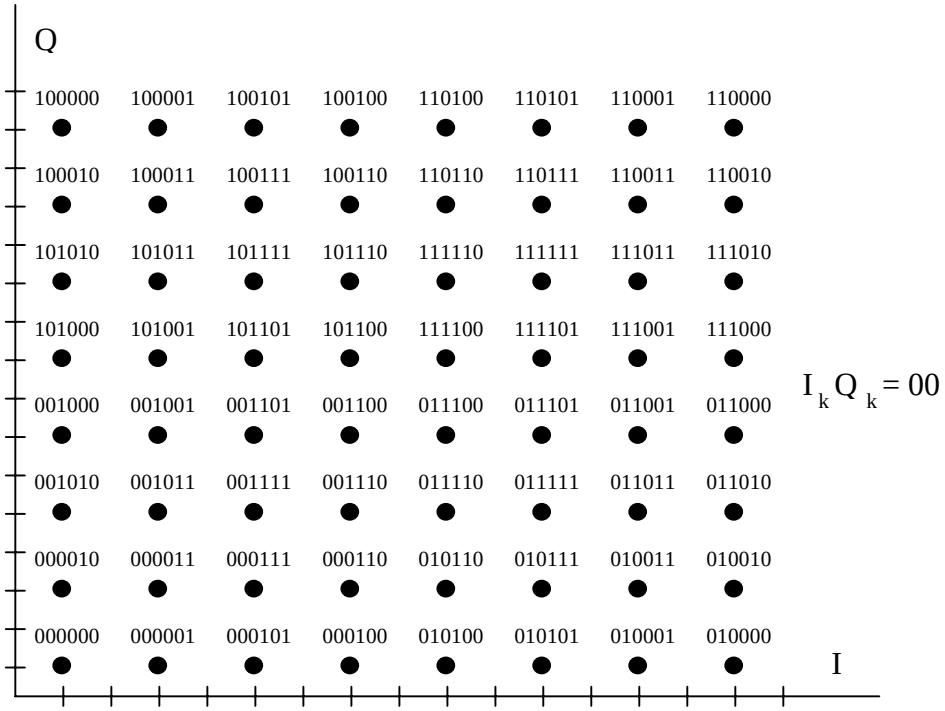

Figure 7.7-13 - 256 QAM Constellation Diagram for I = 12 Interleaver

Prior to modulation, the I and Q signals shall be square-root raised cosine filtered. The roll-off factor shall be 0.13 (for 6 MHz) or 0.15 (for 8 MHz). The square-root raised cosine filter shall have a theoretical function defined by the following expression:

$$\begin{cases} H(f) = 1 & for\,|f| < f_N(1-\alpha) \\ H(f) = \left\{\frac{1}{2} + \frac{1}{2}\sin\frac{\pi}{2f_N}\left[\frac{f_N - |f|}{\alpha}\right]\right\}^{1/2} & for\ f_N(1-\alpha) \le |f| \le f_N(1+\alpha) \\ H(f) = 0 & for\,|f| > f_N(1+\alpha) \end{cases}$$

where $f_N = \frac{1}{2T_s} = \frac{R_s}{2}$ is the Nyquist frequency
and roll-off factor α = 0.13 (for 6 MHz) or α=0.15 (for 8 MHz).

The transmitter filter characteristic is given in the following section.

7.7.10 Baseband filter characteristics

7.7.10.1 Impulse Response for the Transmit Filter

The time-domain response of a square-root raised-cosine pulse with excess bandwidth parameter α is given by:

$$g(t) = \frac{\sin\left[\frac{\pi t}{T}(1-\alpha)\right] + \frac{4\alpha t}{T}\cos\left[\frac{\pi t}{T}(1+\alpha)\right]}{\frac{\pi t}{T}\left[1 - \left(\frac{4\alpha t}{T}\right)^2\right]}$$

where T is the symbol period.
The output signal shall be defined as

 © ISO/IEC 1999 - All rights reserved

Copyright International Organization for Standardization
Provided by IHS under license with ISO
No reproduction or networking permitted without license from IHS
Not for Resale

$$S(t) = [\sum_{n} I_n \bullet g(t - nT)] \bullet \cos(2\pi f_c t) - [\sum_{n} Q_n \bullet g(t - nT)] \bullet \sin(2\pi f_c t)$$

where T is the symbol period ($T=1/f_s$), and f_c the modulator's carrier frequency.
I_n and Q_n equal to ±1 or ±3, independently from each other, for 16-QAM;
I_n and Q_n equal to ±1 or ±3 or ±5 or ±7, independently from each other, for 64-QAM;
I_n and Q_n equal to ±1 or ±3 or ±5 or ±7 or ±9 or ±11 or ±13 or ±15, independently from each other, for 256-QAM.
The convolution of the transmitter filter impulse response with itself shall have low intersymbol interference less than -40dB (RMS).

7.7.10.2 Baseband filter characteristics for 8 MHz

The template given in Figure 7.7-14 shall be used as a minimum requirement for hardware implementation of the Nyquist filter. This template takes into account not only the design limitations of the digital filter, but also the artifacts coming from the analogue processing components of the System (e.g. D/A conversion, analogue filtering, etc.).
The value of in-band ripple r_m in the pass-band up to 0.85 f_N shall be lower than 0.4 dB. The out-of-band rejection shall be greater than 43 dB. The ripple r_N at the Nyquist frequency f_N shall be lower than 0.4 dB. The filter shall be phase linear with the group delay ripple $\leq$ 0.1 T_s up to f_N where, $T_s = 1/R_s$ is the symbol period. The group delay distortion is assumed to be from the analog filtering.

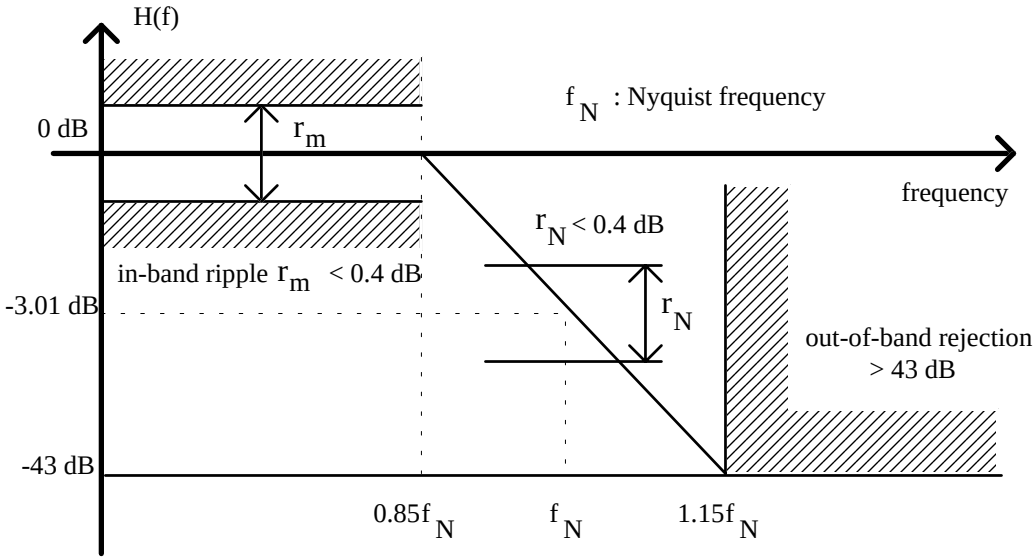

Figure 7.7-14 - Half-Nyquist baseband filter amplitude characteristics for 8 MHz

7.7.10.3 Baseband filter characteristics for 6 MHz

The template given in Figure 7.7-15 shall be used as a minimum requirement for hardware implementation of the Nyquist filter. This template takes into account not only the design limitations of the digital filter, but also the artifacts coming from the analogue processing components of the System (e.g. D/A conversion, analogue filtering, etc.).
The value of in-band ripple r_m in the pass-band up to 0.87 f_N shall be lower than 0.4 dB. The out-of-band rejection shall be greater than 43 dB. The ripple r_N at the Nyquist frequency f_N shall be lower than 1.0 dB. The filter shall be phase linear with the group delay ripple $\leq$ 1.0 T_s (ns) in the pass-band up to 0.87 f_N and $\leq$ 2.0 T_s at f_N, where $T_s = 1/R_s$ is the symbol period. The group delay distortion is assumed to be from the analog filtering.

Copyright International Organization for Standardization
Provided by IHS under license with ISO
No reproduction or networking permitted without license from IHS Not for Resale

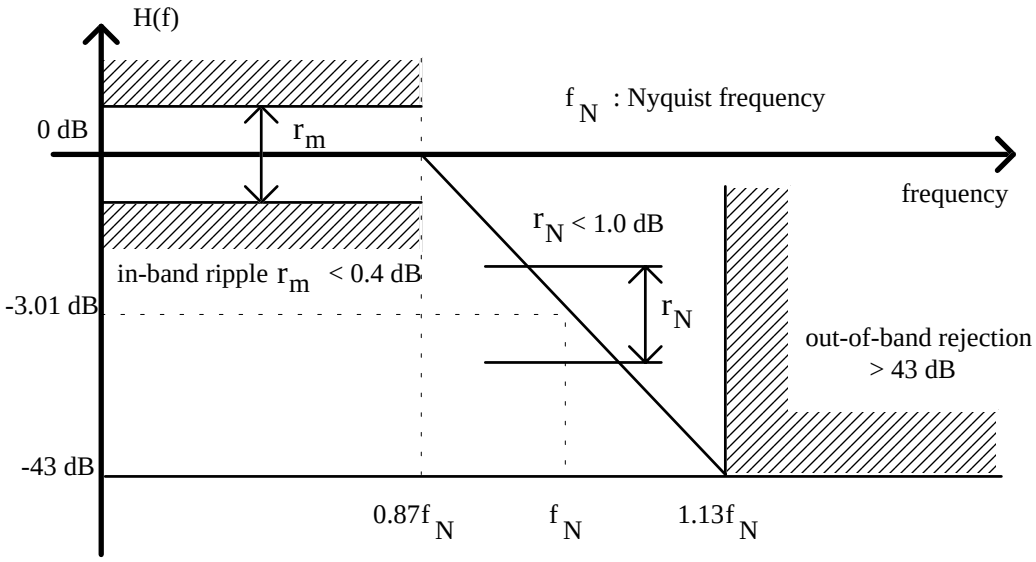

Figure 7.7-15 - Half-Nyquist baseband filter amplitude characteristics for 6 MHz.

7.7.11 Information Bit Rate

Table 7-21 gives examples of the wide range of possible cable symbol rates and occupied bandwidths for different useful bit rates considering 16-QAM, 64-QAM and 256-QAM constellations.

Table 7-21 - Examples of useful bit rates Ru and total bit rates Rt using recommended symbol rates (roll-off = 13% for 6 MHz and roll-off = 15% for 8 MHz).

Modulation scheme	Useful bit rate R_u (MPEG-2 transport layer) [Mbit/s]	Total bit rate $R_{t'}$ including RS(204,188) and HRM if applied [Mbit/s]	Cable symbol rate [Mbaud]	Occupied bandwidth [MHz]
16-QAM	19.448	21.216	5.304	6.0
64-QAM	29.172	31.824	5.304	6.0
256-QAM	38.896	42.432	5.304	6.0
16-QAM	25.491	27.808	6.952	8.0
64-QAM	38.236	41.712	6.952	8.0
256-QAM	50.981	55.616	6.952	8.0
16-QAM (HRM)	19.353*	21.216	5.304	6.0
64-QAM (HRM)	29.030*	31.824	5.304	6.0
256-QAM (HRM)	38.706*	42.432	5.304	6.0
16-QAM (HRM)	25.367*	27.808	6.952	8.0
64-QAM (HRM)	38.050*	41.712	6.952	8.0
256-QAM (HRM)	50.732*	55.616	6.952	8.0

(*) The data rate shown is the effective data rate excluding HRM. Actual bit rate of MPEG-2-TS is the same as for no-HRM, as HRM is inserted in the MPEG-2-TS multiplexing process and removed in the demultiplexing process.

7.7.12 Coaxial Cable Impedance

The coaxial cable nominal impedance shall be 75 Ohm over the frequency range as specified in Table 7-19.

7.7.13 Media Interface Connector

At the user device, the jack/socket shall be a IEC 169-2 female connector (75 Ohm) or F-Type female connector (75 Ohm).

 © ISO/IEC 1999 - All rights reserved

Copyright International Organization for Standardization
Provided by IHS under license with ISO
No reproduction or networking permitted without license from IHS
Not for Resale

7.7.14 Inband Signaling for the Downstream QAM Link

When the QAM-link is utilized as the Downstream MAC control channel, the relationship between the QAM-link and the related upstream QPSK channels is defined in Section 7.8.2.6. This configuration, commonly referred to as in-band signaling, utilizes the downstream QAM-link to transport the HFC MAC information to the STU, as well as timing information needed to coordinate transmission of information in the upstream QPSK message slots.

7.7.14.1 MAC Control Message Structure when Transmitting MPEG-2-TS packets

The MAC Control Message structure that is utilized when the downstream QAM channel is carrying MPEG-2-TS packets is shown in Figure 7.7-16.

4	3	2	3	26	26	40	40	40	4
MPEG Header	Upstream Marker	Slot Number	MAC Flag Control	MAC Flags	Ext. Flags	MAC msg.	MAC msg.	MAC msg.	Rsrvc

Figure 7.7-16 - MAC downstream message structure (MPEG-2-TS format)

The message fields as shown in the MAC downstream message structure (Figure 7.7-16) are defined as:
MPEG Header is the 4 byte MPEG-2 Transport Stream Header as defined in ISO/IEC 13818-1 with a specific PID designated for MAC messages by stream_type 0xC0.
Upstream Marker is a 24 bit field which provides upstream QPSK synchronization information. The definition of the field is as follows:

bit 0: upstream marker enable (MSB)
When this field has the value '1', the slot marker pointer is valid. When this field has the value '0', the slot marker pointer is not valid.
bit 1-7: reserved
bit 8 - 23: upstream slot marker pointer
The slot marker pointer is a 16 bit unsigned integer which indicates the number of "symbol" clocks between the first symbol of the next Sync byte and the next 3msec marker.

Slot Number is a 16 bit field which is defined as follows:

bit 0: slot position register enable (MSB)
When this field has the value '1', the slot position register is valid. When this field has the value '0', the slot position register is not valid.
bit 1-3: reserved
bit 4 is set to the value '1'
bit 5: odd parity
This bit provides odd parity for the slot position register
bits 6-15: upstream slot position register

The slot position register is a 10 bit counter which counts from 0 to N with bit 6 the MSB.
(See Section 7.8.1.9 ESF Mbit Data Link for the functionality of the slot position register).

MAC Flag Control is a 24 bit field (b0,b1,b2, … b23) which provides control information which is used in conjunction with the MAC Flags and Extension Flags. The definition of the MAC Flag Control field is as follows:

b0-b2	channel 1 flag field control
b3-b5	channel 2 flag field control
b6-b8	channel 3 flag field control
b9-b11	channel 4 flag field control
b12-b14	channel 5 flag field control
b15-b17	channel 6 flag field control
b18-b20	channel 7 flag field control
b21-b23	channel 8 flag field control

Each of the above channel "x" flag field control fields are defined as follows:
channel x flag control (a, b, c)

bit a:	0	channel x flag field disabled
	1	channel x flag field enabled
bit b, c:	00	all flags valid for second previous 3 ms (6 ms for 256 kb/s US) period (out-of-band signaling equivalent)

Copyright International Organization for Standardization
Provided by IHS under license with ISO
No reproduction or networking permitted without license from IHS Not for Resale

01 flags valid for 1st ms of previous 3 ms (6 ms for 256 kb/s US) period
10 flags valid for 2nd ms of previous 3 ms (6 ms for 256 kb/s US) period
11 flags valid for 3rd ms of previous 3 ms (6 ms for 256 kb/s US) period

MAC Flags is a 26 byte field containing 8 slot configuration fields (24 bits each) which contain slot configuration information for the related upstream channels followed by two reserved bytes. The definition of each slot configuration field is defined as follows:

b0 = ranging control slot indicator for next 3 ms period (MSB)
b1-b6 = slot boundary definition field for next 3 ms period
b7 = slot 1 reception indicator for [second] previous 3 ms (6 ms for 256 kb/s US) period
b8 = slot 2 reception indicator for [second] previous 3 ms (6 ms for 256 kb/s US) period
b9 = slot 3 reception indicator for [second] previous 3 ms (6 ms for 256 kb/s US) period
b10 = slot 4 reception indicator for [second] previous 3 ms (6 ms for 256 kb/s US) period
b11 = slot 5 reception indicator for [second] previous 3 ms (6 ms for 256 kb/s US) period
b12 = slot 6 reception indicator for [second] previous 3 ms (6 ms for 256 kb/s US) period
b13 = slot 7 reception indicator for [second] previous 3 ms (6 ms for 256 kb/s US) period
b14 = slot 8 reception indicator for [second] previous 3 ms (6 ms for 256 kb/s US) period
b15 = slot 9 reception indicator for [second] previous 3 ms (6 ms for 256 kb/s US) period
b16-17 = reservation control for next 3 ms (6 ms for 256 kb/s US) period
b18-b23= CRC 6 parity
(See also Section 7.8.1.10 SL-ESF Frame Payload Structure).

The slot configuration fields are used in conjunction with the MAC Flag Control field defined above. Note that when the MAC Flag Control field designates that a 1 msec flag update is enabled; (1) the reception indicators refer to the previous 3 ms (6 ms for 256 kb/s US) period (the bracketed term [second] is omitted from the definition), (2) only the reception indicators which relate to slots which occur during the designated 1 ms period are valid, and (3) the ranging control slot indicator, slot boundary definition field, and reservation control field are valid and consistent during each 3 ms (6 ms for 256 kb/s US) period.

Extension Flags is a 26 byte field which is used when one or more 3.088 Mbit/s upstream QPSK links are used. The definition of the Extension Flags field is identical to the definition of the MAC Flags field above.
When 3.088 Mbit/s QPSK upstream links are used, Each 3.088 Mbit/s upstream channel utilizes two consecutive qpsk_slot_configuration fields. The definition of the first slot configuration field is unchanged. The definition of the second slot configuration field extends the boundary definition to slots 10 through 18, and the reception indicators cover slots 10 through 18.

MAC Message contains a 40 byte message, the general format defined in Section 7.8.3.3 MAC Information Transport.

rsrvc is a 4 byte field reserved for future use.

The three 40 byte MAC Message fields are utilized sequentially, i.e., if there is no MAC message in the first field, then the following fields are empty, etc. The algorithm shown in Figure 7.7-17 can be used to properly parse the MAC message fields.

 © ISO/IEC 1999 - All rights reserved

--`,,```,,,,````-`-`,,`,,`,`,,`---

Copyright International Organization for Standardization
Provided by IHS under license with ISO
No reproduction or networking permitted without license from IHS Not for Resale

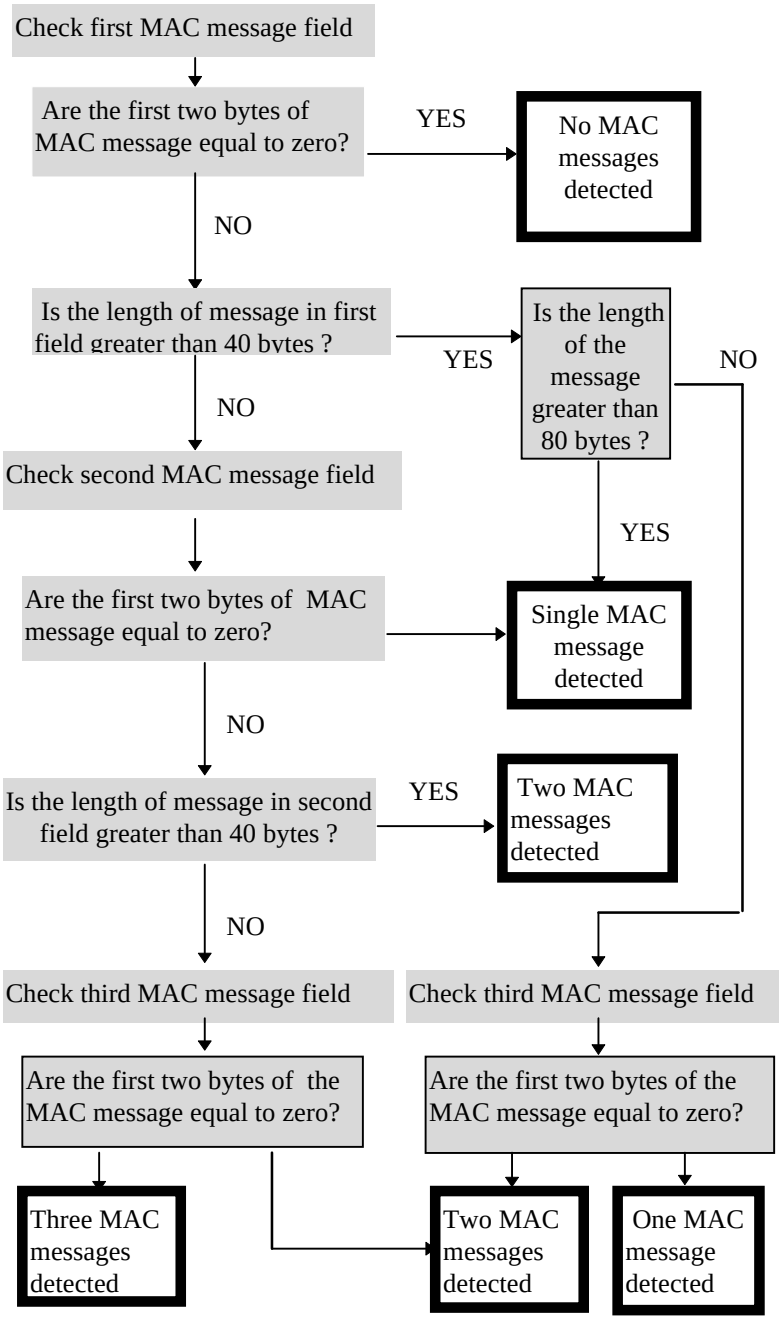

Figure 7.7-17 - MAC Message Field Parsing Algorithm.

7.7.14.2 MAC Control Message Structure when Transmitting ATM Cells

The MAC Control Message structure that is utilized when the downstream QAM channel is carrying ATM cells is shown in Figure 7.7-18.

YES

Copyright International Organization for Standardization
Provided by IHS under license with ISO
No reproduction or networking permitted without license from IHS Not for Resale

2	2	3	2	3	26	26	40	40	40	4
MAC Header	rsrva	Upstream Marker	Slot Number	MAC Flag Control	MAC Flags	Ext. Flags	MAC msg.	MAC msg.	MAC msg.	rsrvc

Figure 7.7-18 - MAC downstream message structure (ATM structure)

The message fields as shown in the MAC downstream message structure (Figure 7.7-16) are defined as:
MAC Header is a 2 byte field composes of SYNC and CNTL3, which are defined as

SYNC: 47Hex

CNTL3: E1PSSSSSb where E, P, and S are defined below.

E: Transport error indicator

The transport error indicator is a 1 bit flag. When set to "1", it indicates that at least 1 uncorrectable bit error exists in the associated packet. This bit may be set to "1" by entities in the transport layer. When set to "1", this bit shall not be reset to "0" unless the bit value(s) in error have been corrected.

P: Transport priority

The transport priority is a 1 bit indicator. When set to "1", it indicates that the associated packet is a greater priority than the packets with the transport priority set to "0".

SSSSS: This fixed 5 bit field with value of 11111b.

rsrva is a 2 byte field reserved for future use.

Upstream Marker is defined in Figure 7.7-18 above.
Slot Number is defined in Figure 7.7-18 above.
MAC Flag Control is defined in Figure 7.7-18 above.
MAC Flags is defined in Figure 7.7-18 above.
Extension Flags is defined in Figure 7.7-18 above.
MAC Message is defined in Figure 7.7-18 above.
rsrvc is defined in Figure 7.7-18 above.

7.7.14.3 Frequency of MAC Downstream Message for Inband

The MAC Control Message structure must be transmitted at least once every 3 milliseconds with an enabled slot number (slot number enable = 1), a valid upstream marker (upstream marker enable = 1), and valid MAC flags (as designated by the MAC Flag Control field). Additional MAC Control Messages may be transmitted during any 3 millisecond period with a disabled slot number (slot number enable = 0) field, a disabled upstream marker field (upstream marker enable = 0), and disabled MAC Flags (as designated by the MAC Flag Control field).

7.7.14.4 Timing Considerations for Utilizing the Upstream Marker Field

In order to describe how this Upstream Marker can be used to derive the location of the 3 msec marker, consider the system diagram in Figure 7.7-19.

 © ISO/IEC 1999 - All rights reserved

Copyright International Organization for Standardization
Provided by IHS under license with ISO
No reproduction or networking permitted without license from IHS Not for Resale

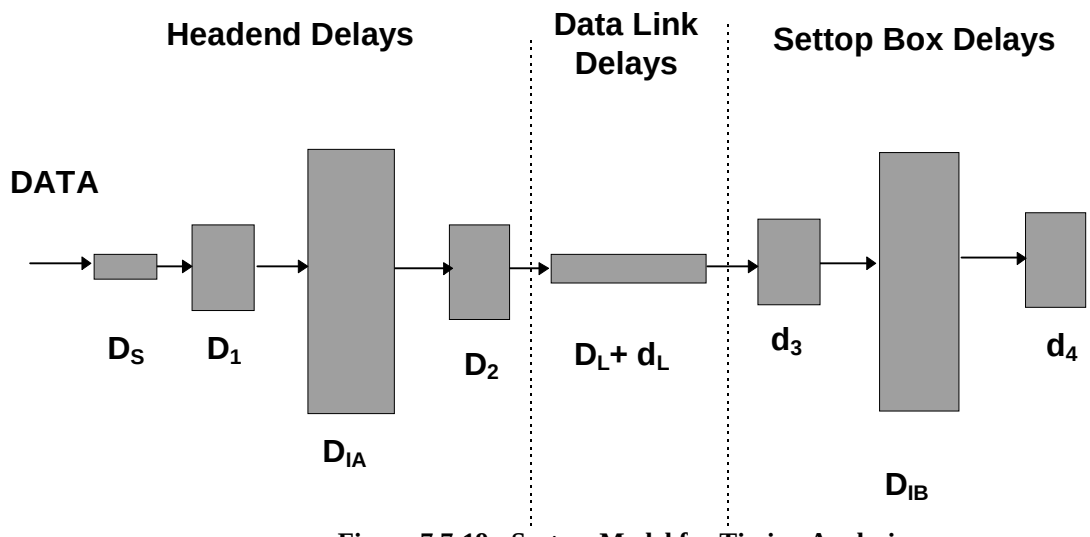

Figure 7.7-19 - System Model for Timing Analysis

The delay between the location of the end of the Upstream Marker and the beginning of the next Sync byte, designated as D_S, is a constant value for each bit rate equal to the equivalent time of 197 bytes, or

(197 * 8 /x) symbol clocks where x = 4, for 16 QAM
6, for 64 QAM
8, for 256 QAM

There will be some processing delay in the Headend hardware between the location where the Upstream Marker is inserted in the MAC packet and the arrival of the data into the interleaver. This should be a constant delay, D_1, which is the same for every incoming byte, including the sync byte following the Upstream Marker.

The delay due to the interleaving process in the Headend is D_{IA} and will be zero for each sync byte.

There will be some processing delay in the Headend hardware between the output of the interleaver and the output of the QAM modulator. This should be a constant delay, D_2, for every byte in the outgoing stream.

The data link is composed of two delay values, D_L, the constant link delay that every STU experiences, and d_L, the variable link delay for each STU which is due to the fact that each STU is located at a different distance from the Headend. This variable link delay is compensated for by the ranging operation.

There will be some processing delay in the STU hardware between the input of the QAM demodulator and the input of the deinterleaver. This delay is design dependent, d_3, and may be a constant delay or a variable delay for each byte in the data stream.

The delay due to the deinterleaving process in the STU is D_{IB}, and will be equal to the entire interleave delay for each sync byte.

The total interleave delay,

$D_I = D_{IA} + D_{IB}$

will be constant for each byte. The value will be given by

D_I = 204 * 8 * interleave_depth / bit rate

for example, if the modulation is QAM 64 with a baud rate of 5.0 Mb/s,

D_I = 204 * 8 * 12 / 30M = 652.8 microseconds or 3,264 symbol clocks

There will be some processing delay in the STU hardware between the output of the deinterleaver and the circuitry that utilizes the Upstream marker and following sync byte for generating the local 3 msec marker. This delay, which includes Reed Solomon FEC, is design dependent, d_4, and may be a constant delay or a variable delay for each byte in the data stream.

The accumulated delay in the data link is composed of a number of constant terms and three variable terms. The constant terms will be identical for every STU that is utilizing a particular QAM channel for inband timing and thus becomes a fixed offset between when the counter which is loading the Upstream Marker value and the actual location of the 3 msec marker at each STU. Each STU is responsible for compensating for the design dependent delays, d_3 and d_4, before utilizing the Upstream Marker value for generating the 3 msec marker. The variable link delay, d_L, will be compensated for via the ranging algorithm, in the same way as performed when out-of-band signaling is employed.

Copyright International Organization for Standardization
Provided by IHS under license with ISO
No reproduction or networking permitted without license from IHS Not for Resale

7.8 Passband Bi-directional PHY on coax

This Physical Layer Interface supports transmission over radio frequency coax (up to 1GHz bandwidth). It is referred to as the bi-directional QPSK-link on HFC (Hybrid Fiber Coax).
This Physical Layer Interface describes the complete physical layer structure, i.e. framing structure, channel coding and modulation for the carriage of S2, S3 and S4 information flows. Physical layer and framing specifications are provided for each information flow in appropriate directions.
A summary of the spectrum allocation for the S2, S3 and S4 information flows is depicted in Figure 7.8-1.
The transmitter and the receiver in the NIU/STB (depending on the presence or the lack of the A0 interface respectively) shall operate over the entire specified frequency ranges indicated respectively in Table 7-27 and in Table 7-23. The transmitter and the receiver in the access node shall operate within the specified ranges indicates respectively in Table 7-23 and in Table 7-27.

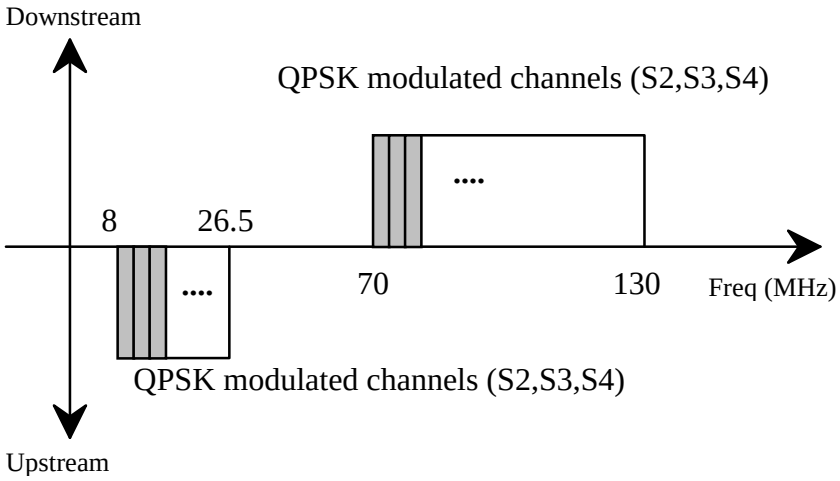

Figure 7.8-1- Spectrum allocation for the bi-directional PHY on coax.

The “Passband Bi-directional PHY on coax” tool and the “Passband Unidirectional PHY on coax” tool may be used together on the same physical medium. Figure 7.8-2 shows the spectrum allocation in this case.

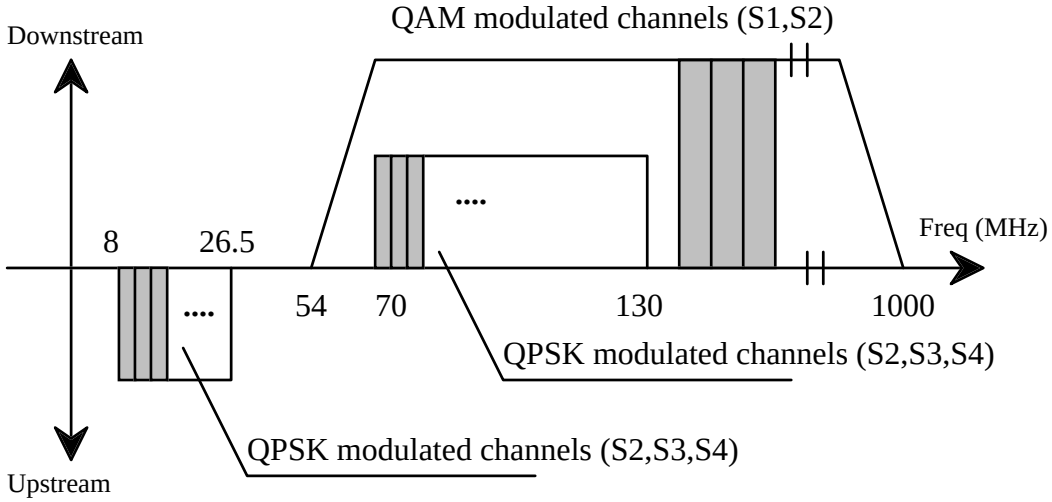

Figure 7.8-2 - Spectrum allocation for the integrated unidirectional and bi-directional passband PHY on a single coax.

Conceptual block diagrams of the NIU/STB transceivers are shown in Figure 7.8-3 and Figure 7.8-4.

 © ISO/IEC 1999 - All rights reserved

Copyright International Organization for Standardization
Provided by IHS under license with ISO
No reproduction or networking permitted without license from IHS
Not for Resale

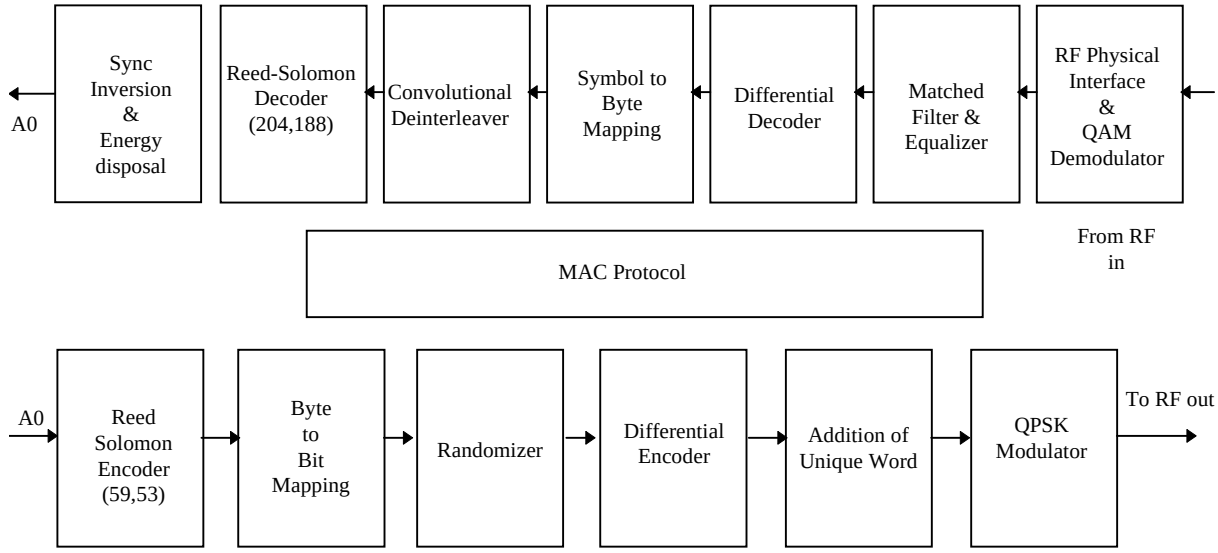

Figure 7.8-3 - NIU/STB IB transceiver conceptual block diagram.

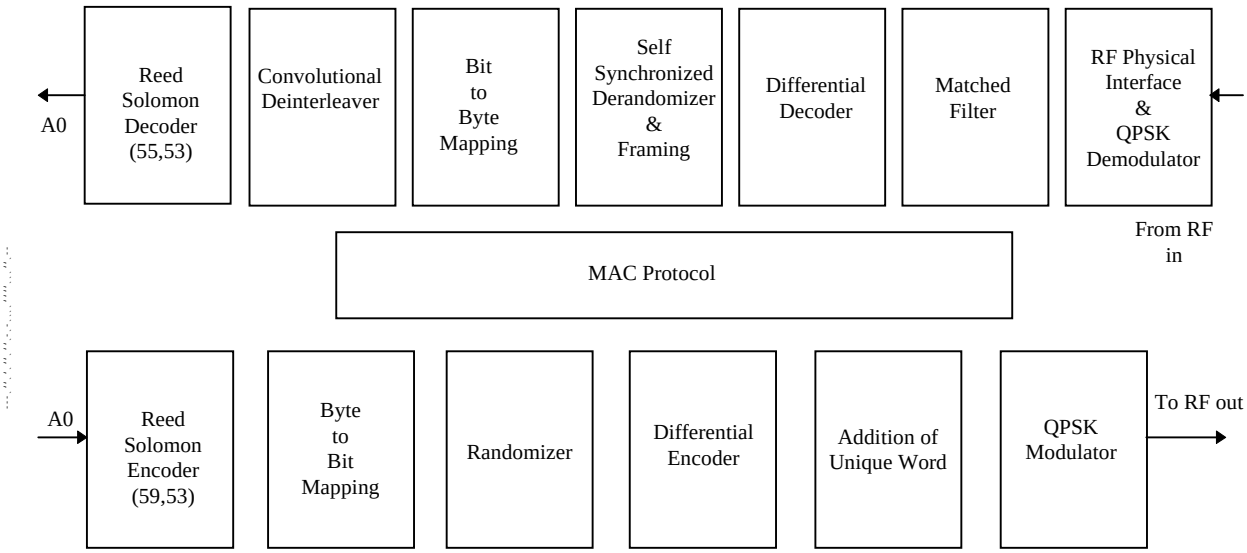

Figure 7.8-4 - NIU/STB OOB transceiver conceptual block diagram.

7.8.1 Downstream Physical Interface Specification

To carry downstream information S3 and S4, as well as a limited amount of S2 data, a combination of quaternary phase shift keying (QPSK) and a framing structure are specified. QPSK is specified due to its increased error performance, its spectral efficiency, and its low peak to average power allow transmission at a high average power.

7.8.1.1 Quaternary Phase Shift Keying (QPSK)

QPSK modulation is used as a means of encoding digital information over wireline or fiber transmission links. The method is a subset of Phase Shift Keying (PSK) which is a subset of Phase Modulation (PM). Specifically QPSK is a four level use of digital phase modulation (PM). Quadrature signal representations involve expressing an arbitrary phase sinusoidal waveform as a linear combination of a cosine wave and a sine wave with zero starting phases.

The time-domain response of a square-root raised-cosine pulse with excess bandwidth parameter α is given by:

Copyright International Organization for Standardization
Provided by IHS under license with ISO
No reproduction or networking permitted without license from IHS Not for Resale

$$g(t) = \frac{\sin\left[\frac{\pi t}{T}(1-\alpha)\right] + \frac{4\alpha t}{T}\cos\left[\frac{\pi t}{T}(1+\alpha)\right]}{\frac{\pi t}{T}\left[1-\left(\frac{4\alpha t}{T}\right)^2\right]}$$

where T is the symbol period.
The output signal shall be defined as

$$S(t) = \sum_n \left[I_n \bullet g(t - nT) \bullet \cos(2\pi f_c t) - Q_n \bullet g(t - nT) \bullet \sin(2\pi f_c t) \right]$$

with I_n and Q_n equal to ±1, independently from each other, and f_c the QPSK modulator's carrier frequency.
The QPSK modulator divides the incoming bit stream so that bits are sent alternately to the in-phase modulator I and the out-of-phase modulator Q. These same bit streams appear at the output of the respective phase detectors in the demodulator where they are interleaved back into a serial bit stream.
The QPSK signal parameters are:

RF bandwidth	BW= (f_b / 2) * (1 + α)
Occupied RF Spectrum	[f_c - BW/2, f_c + BW/2]
Symbol Rate	$f_s = f_b / 2$
Nyquist Frequency	$f_N = f_s / 2$

with f_b = bit rate, f_c = carrier frequency and α = excess bandwidth.
For both bit rates: 1.544 Mbit/s (Grade A) and 3.088 Mbit/s (Grade B), the Power Spectrum at the QPSK transmitter shall comply to the Power Spectrum Mask given in Table 7-22 and Figure 7.8-5. The Power Spectrum Mask shall be applied symmetrically around the carrier frequency.

Table 7-22 - QPSK Downstream Transmitter Power Spectrum

$\lvert (f - f_c) / f_N \rvert$	Power Spectrum
≤ 1-α	0 ± 0.25 dB
at 1	-3 ± 0.25 dB
at 1+α	≤ -21 dB
≥ 2	≤ -40 dB

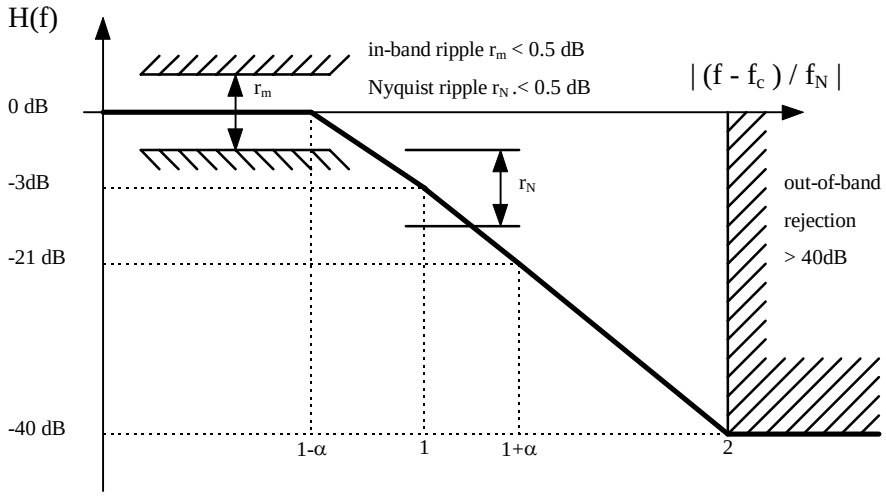

Figure 7.8-5 - QPSK Downstream Transmitter Power Spectrum

QPSK systems require the use of differential encoding and corresponding differential detection. This is a result of the receivers having no method of determining if a recovered reference is a sine reference or a cosine reference. In addition, the polarity of the recovered reference is uncertain.
Differential encoding transmits the information in encoded phase differences between the two successive signals. The modulator processes the digital binary symbols to achieve differential encoding and then transmits the absolute phases. The differential encoding is implemented at the digital level.
The implementation of the QPSK (de)modulator shall comply to the specifications given in Table 7-23.

 © ISO/IEC 1999 - All rights reserved

Copyright International Organization for Standardization
Provided by IHS under license with ISO
No reproduction or networking permitted without license from IHS
Not for Resale

Table 7-23 - Specifications for QPSK Modulation (Downstream)

Transmission Rate	1.544 Mbit/s for Grade A 3.088 Mbit/s for Grade B A QPSK demodulator shall support either A or B or Both.
Modulation	Differentially encoded QPSK.
Transmit Filtering	Filtering is α = 0.30 square root raised cosine
Channel Spacing	1 MHz for Grade A 2 MHz for Grade B
Frequency Step Size	250 kHz (center frequency granularity)
Randomization	After addition of the FEC bytes, all of the 1.544 Mbit/s or 3.088 Mbit/s data is passed through a six register linear feedback shift register (LFSR) randomizer to ensure a random distribution of ones and zeroes. The generating polynomial is: $x^6 + x^5 + 1$. Byte/serial conversion shall be MSB first. Randomizer: Serial Input 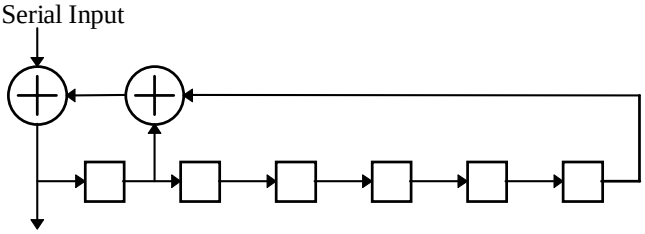 Serial Output A complementary self-synchronizing derandomizer is used in the receiver to recover the data. Derandomizer: Serial Input 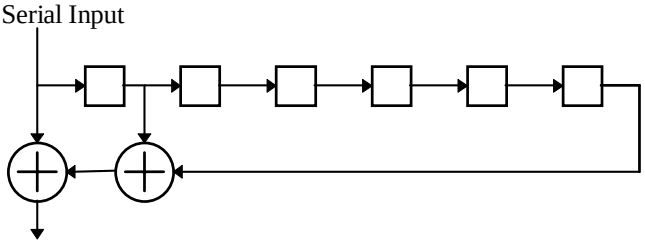 Serial Output
Differential Encoding	Bytes entering the byte-to-symbol encoder are divided into four bit pairs, each bit pair generating one QPSK symbol. Byte boundaries coincide with bit pair boundaries: that is, no bit pairs overlap two bytes. The bit pair corresponding to the MSBs of the byte is sent first. Within each bit pair, the more significant bit is referred to a 'A' and the less significant as 'B'. The differential encoder shall accept bits(A,B) in sequence, and generate phase changes as follows: A B Phase Change 0 0 none 0 1 + 90 degrees 1 1 180 degrees 1 0 - 90 degrees

Copyright International Organization for Standardization
Provided by IHS under license with ISO
No reproduction or networking permitted without license from IHS Not for Resale

Signal Constellation	The outputs I, Q from the differential encoder map to the phase states as follows: 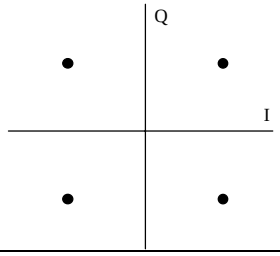
Frequency Range	70 to 130 MHz. The receiver shall operate over the entire specified frequency range.
Frequency Stability	+/- 50 ppm measured at the upper limit of the frequency range
Symbol Rate Accuracy	+/- 50 ppm
Transmitter Power Spectrum Mask	A common mask for both bit rates: 1.544 Mbit/s (Grade A) and 3.088 Mbit/s (Grade B) is given in Table 7-22 and Figure 7.8-5.
Carrier Suppression	> 30 dB
I/Q Amplitude Imbalance	< 1.0 dB
I/Q Phase Imbalance	< 2.0 degree
Receive Power Level at the demodulator input (downstream out-of-band)	42 - 75 dBmicroV (RMS) (75 Ohm)
C/N at the demodulator input (Nyquist bandwidth, white noise)	$\geq$ 20 dB @ BER<1x10E-10 (after error correction) measured at A1 reference point (i.e. 1 error in 2 hours at 1.5 Mbit/s)

7.8.1.2 Coaxial Cable Impedance

The coaxial cable nominal impedance shall be 75 Ohm over the frequency range as specified in Table 7-27.

7.8.1.3 Media Interface Connector

At the user device, the jack/socket shall be a IEC 169-2 female connector (75 Ohm) or F-Type female connector (75 Ohm).

7.8.1.4 Framing Structure

The framing organization shall be based on Signaling Link Extended SuperFrame (SL-ESF) format, an SL-ESF payload structure, and an ATM cell structure.

7.8.1.5 Signaling Link Extended Superframe (SL-ESF) Framing Format

The Signaling Link Extended Superframe (SL-ESF) frame structure is illustrated in Figure 7.8-6. The bitstream is partitioned into 4632 bit Extended Superframes. Each Extended Superframe consists of 24 193-bit frames. Each frame consists of 1 overhead (OH) bit and 24 bytes (192 bits) of payload.

 © ISO/IEC 1999 - All rights reserved

--`,,```,,,,````-`-`,,`,,`,`,,`---

Copyright International Organization for Standardization
Provided by IHS under license with ISO
No reproduction or networking permitted without license from IHS Not for Resale

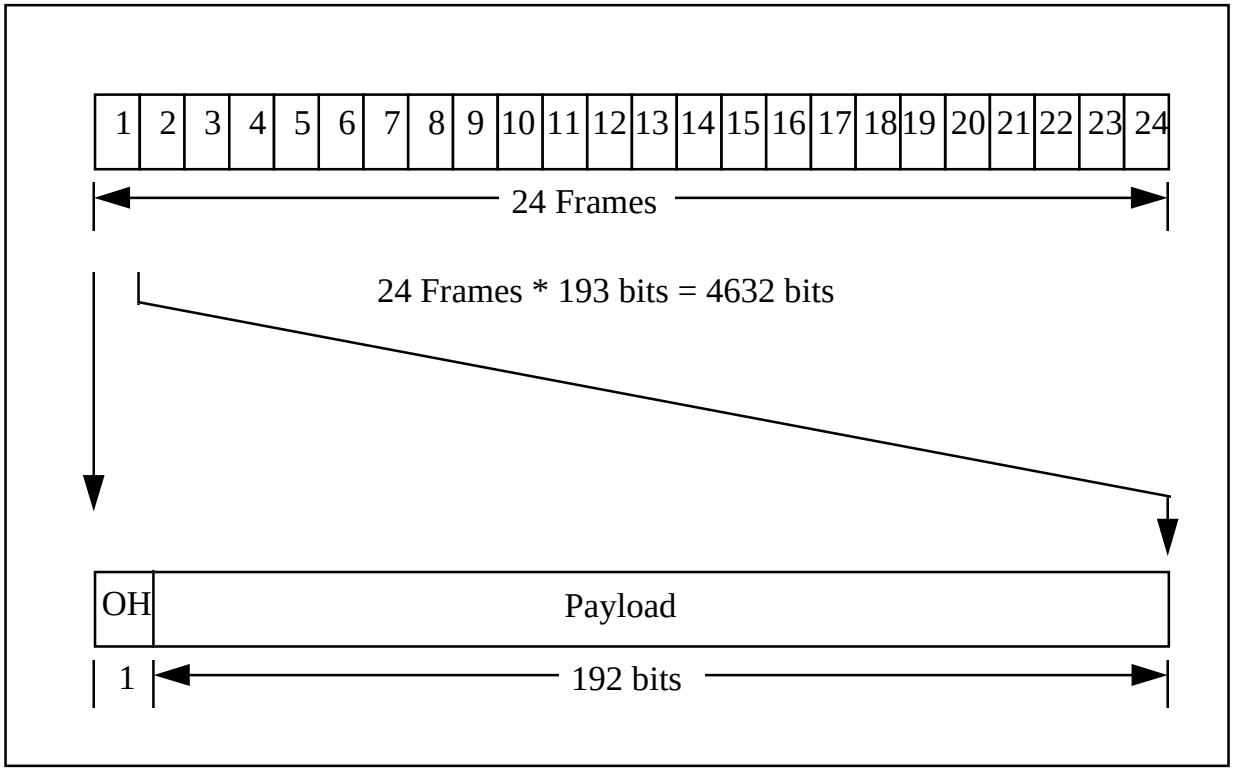

Figure 7.8-6 - SL-ESF Frame Structure

7.8.1.6 SL-ESF Frame Overhead

There are 24 frame overhead bits in the Extended Superframe which are divided into Extended Superframe Frame Alignment Signal (F1-F6), Cyclic Redundancy Check (C1-C6), and M-bit Data Link (M1-M12), as illustrated in Table 7-24.

Copyright International Organization for Standardization
Provided by IHS under license with ISO
No reproduction or networking permitted without license from IHS Not for Resale

Table 7-24 - Extended Superframe Overhead Structure

Frame Number	Bit Number	Overhead Bit	Data (192 bits)	
1	0	**M1**		♦ Slot Position
2	193	C1		
3	386	M2		
4	579	F1 = 0		
5	772	M3		
6	965	C2		
7	1158	M4		
8	1351	F2 = 0		
9	1544	**M5**		♦ Slot Position
10	1737	C3		
11	1930	M6		
12	2123	F3 = 1		
13	2316	M7		
14	2509	C4		
15	2702	M8		
16	2895	F4 = 0		
17	3088	**M9**		♦ Slot Position
18	3281	C5		
19	3474	M10		
20	3667	F5 = 1		
21	3860	M11		
22	4053	C6		
23	4246	M12		
24	4439	F6 = 1		

FAS: Frame Alignment Signal (F1 - F6)
DL: Mbit Data Link (M1 - M12)
CRC: Cyclic Redundancy Check (C1 - C6)

7.8.1.7 ESF Frame Alignment Signal

The ESF Frame Alignment Signal (FAS) is used to locate all 24 frames and overhead bit positions. The bit values of the FAS are defined as follows:
F1 = 0, F2 = 0, F3 = 1, F4 = 0, F5 = 1, F6 = 1.

7.8.1.8 ESF Cyclic Redundancy Check

The Cyclic Redundancy Check field (Table 7-24) contains the CRC-6 check bits calculated over the previous Extended Superframe (CRC Message block [CMB] size = 4632 bits). Before calculation, all 24 frame overhead bits are equated to the value “1”. All information in the other bit positions is unchanged. The check bit sequence C1-C6 is the remainder after multiplication by x^6 and then division by the generator polynomial x^6+x+1 of the CMB. C1 is the most significant bit of the remainder. The initial remainder value is preset to all zeros (see [ITU-T G.704]).

7.8.1.9 ESF Mbit Data Link

The M-bits in the SL-ESF serve two purposes:

- to mark the slot positions for the upstream Contention based and Contentionless based signaling links
- to provide slot count information for upstream message bandwidth allocation management in the NIU/STB.

M-bits M1, M5, and M9 mark the start of an upstream slot position for upstream message transmission.
M-bits M10 - M1 are a register which counts from 0 to N, incrementing by one every 3 ms, where N an unsigned integer which indicates slot position cycle size (the value of N is calculated from Service_Channel_Last_Slot sent in the MAC Default Configuration Message and the upstream bit rate of the service channel. For the case of a 256 kb/s service channel, the maximum value of Service_Channel_Last_Slot is 1535, and for the cases of 1.544 and

 © ISO/IEC 1999 - All rights reserved

Copyright International Organization for Standardization
Provided by IHS under license with ISO
No reproduction or networking permitted without license from IHS Not for Resale

3.088 Mb/s the maximum value of Service_Channel_Last_Slot is 8189.).The value of N shall be the same for all DS carriers, and N is related to the number of US slots by:
Number_of_US_Slots = 3 * m * (N+1),
where m is related to the upstream transmission bit rate as described below. The upstream slot position register indicates the upstream slot positions that will correspond to the next 3 ms period. Upstream slot positions are counted from 0 to N. There are 3 upstream slots per upstream slot position when the upstream data rate is 1.544 Mbit/s, there are 6 upstream slots per upstream slot position when the upstream data rate is 3.088 Mbit/s, and there is 0.5 upstream slot per upstream slot position when the upstream data rate is 256 kbit/s. The corresponding upstream slot rates are, therefore, 3000 upstream slots/sec when the upstream data rate is 1.544 Mbit/s, 6000 upstream slots/sec when the upstream data rate is 3.088 Mbit/s, and 500 upstream slots/sec when the upstream data rate is 256 kbit/s.
There are 9 upstream minislots per upstream slot position when the upstream data rate is 1.544 Mbit/s, there are 18 upstream minislots per upstream slot position when the upstream data rate is 3.088 Mbit/s, and there are 1.5 upstream minislots per upstream slot position when the upstream data rate is 256 kbit/s. The corresponding upstream minislot rates are, therefore, 9000 upstream minislots/sec when the upstream data rate is 1.544 Mbit/s, 18000 upstream minislots/sec when the upstream data rate is 3.088 Mbit/s, and 1500 upstream minislots/sec when the upstream data rate is 256 kbit/s. The algorithm to determine the upstream slot position counter value is given below:

```
if (downstream_rate == 3.088 Mbit/s) {n = 1;}
else {n = 0;}
upstream_slot_position_register = value of M-bits latched at bit_position M11 (M10 - M1)
if (upstream_rate==1.544 Mbit/s)          { m = 3;}
else if (upstream_rate==3.088 Mbit/s) {m = 6;}
else {m = 0.5}
if ( bit_position==M1 and previous M12 ==1)
{ upstream_slot_position_counter = upstream_slot_position_register * 3 * m; }
if ( bit_position == M5)
if ( (n == 0) or (n == 1 and previous M12 == 0) )
{ upstream_slot_position_counter = upstream_slot_position_counter+m; }
if (bit_position == M9)
if ( (n = 0) or (n = 1 and previous M12 == 1) )
{ upstream_slot_position_counter = upstream_slot_position_counter + m; }
if (bit_position == M11)
{ temp_upstream_slot_position_register = (M10, M9, M8, … M1); }
if ( (bit_position == M12 ) and ( M12 == 1) )
{upstream_slot_position_register = temp_upstream_slot_position_register;}
```

where, the M-bits (see Table) will be defined as follows:

M1 - M10 = 10 bit ESF counter which counts from 0 to N with M10 the most significant bit (MSB);

M11 = odd parity for the ESF counter, i.e., M11 = 1 if the ESF_value (M1-M10) has an even number of bits set to 1;

M12 = 1: ESF counter valid
0; ESF counter not valid

The values assigned to M12 are as follows:

(1) When the QPSK downstream channel bit rate is 1.544 Mb/s, the M12 bit is always set to the value ‘1’.

(2) When the QPSK downstream channel bit rate is 3.088 Mb/s, the information is always transmitted in pairs of superframes, where superframe-A is the first superframe in the pair, and superframe-B is the second superframe in the pair. In this case, the M12 bit of superframe-A is set to the value ‘0’ and the M12 bit of superframe-B is set to the value ‘1’.

7.8.1.10 SL-ESF Frame Payload Structure

The SL-ESF frame payload structure provides a known container for defining the location of the ATM cells and the corresponding Reed Solomon parity values. The SL-ESF payload structure is shown in Figure 7.8-7.

Copyright International Organization for Standardization
Provided by IHS under license with ISO
No reproduction or networking permitted without license from IHS Not for Resale

1	← 2 →		← 53 →	← 2 →		
1	R1a	R1b	ATM Cell	RS parity		
2	R1c	R2a			R2b	
3	R2c	R3a				
4	R3b	R3c			R4a	
5	R4b	R4c				
6	R5a	R5b			R5c	
7	R6a	R6b				
8	R6c	R7a			R7b	
9	R7c	R8a				
10	R8b	R8c			T	T

Figure 7.8-7 - SL-ESF Payload Structure Format

The SL-ESF payload structure consists of 5 rows of 57 bytes each, 4 rows of 58 bytes each which includes 1 byte trailer, and 1 row of 59 bytes, which includes a 2 byte trailer. The first bit of the SL-ESF payload structure follows the M1 bit of the SL-ESF frame. The SL-ESF payload fields are defined as follows.
The two T fields shall be set to 0 to facilitate future enhancements.
Rxa-Rxc is a 24 bit field containing slot configuration information for the related upstream channel and is defined as:

Rxa = (b0..b7)
Rxb = (b8..b15)
Rxc = (b16..b23)

qpsk_x_slot_configuration = (b0..b23)
= slot configuration information for the related upstream channel

where

b0 = ranging control slot indicator for next 3ms (6ms for 256 kb/s US) period
b1-b6 = slot boundary definition field for next 3ms (6ms for 256 kb/s US) period
b7 = slot 1 reception indicator for second previous 3ms (6 ms for 256 kb/s US) period
b8 = slot 2 reception indicator for second previous 3ms (6 ms for 256 kb/s US) period
b9 = slot 3 reception indicator for second previous 3ms (6 ms for 256 kb/s US) period
b10 = slot 4 reception indicator for second previous 3ms (6 ms for 256 kb/s US) period
b11 = slot 5 reception indicator for second previous 3ms (6 ms for 256 kb/s US) period
b12 = slot 6 reception indicator for second previous 3ms (6 ms for 256 kb/s US) period
b13 = slot 7 reception indicator for second previous 3ms (6 ms for 256 kb/s US) period
b14 = slot 8 reception indicator for second previous 3ms (6 ms for 256 kb/s US) period
b15 = slot 9 reception indicator for second previous 3ms (6 ms for 256 kb/s US) period
b16-17 = reservation control for next 3 ms (6 ms for 256 kb/s US) period
b18-b23 = CRC 6 parity (see definition in SL-ESF section)

When the upstream data channel is a 256 kbit/s data channel, then only the first three slot reception indicators are valid. These slots indicator refer to the three available slots which span over two 3ms period periods in the 256 kbit/s. When the upstream data channel is a 3.088 Mb/s data channel, two consecutive qpsk_slot_configuration fields are used. The definition of the first slot configuration field is unchanged. The definition of the second slot configuration field extends the boundary definition to upstream slots 10 through 18, and the reception indicators cover upstream slots 10 through 18.
When the Downstream MAC channel is a 3.088 Mbit/s data channel, the Slot Configuration fields in superframe-B may be used when one or more 3.088 Mbit/s upstream QPSK channels are being utilized. The index for the overhead bytes in superframe-B may be R9a, R9b, R9c, R10a, ... R16a, R16b, R16c.
Reed-Solomon encoding shall be performed on each ATM cell with T=1. This means that 1 erroneous byte per ATM cell can be corrected. This process adds 2 parity bytes to the ATM cell to give a code word of (55,53). The shortened Reed-Solomon code shall be implemented by appending 200 bytes, all set to zero, before the information bytes at the input of a (255,253) encoder; after the coding procedure these bytes are discarded.
The Reed-Solomon code shall have the following generator polynomials:

Code Generator Polynomial: $g(x) = (x + \mu^0)(x + \mu^1)$, **where** μ**=02hex**
Field Generator Polynomial: $p(x) = x^8 + x^4 + x^3 + x^2 + 1$

Convolutional interleaving shall be applied to the ATM cells contained in the SL-ESF. The Rxa - Rxc bytes and the two T bytes shall not be included in the interleaving process. Convolutional interleaving is applied by interleaving 5 lines of 55 bytes.
Following the scheme of Figure 7.8-8, convolutional interleaving shall be applied to the error protected packets. The convolutional interleaving process shall be based on the Forney approach, which is compatible with the

 © ISO/IEC 1999 - All rights reserved

Copyright International Organization for Standardization
Provided by IHS under license with ISO
No reproduction or networking permitted without license from IHS Not for Resale

Ramsey type III approach, with I=5. The Interleaved frame shall be composed of overlapping error protected packets and shall be delimited by the start of the SL-ESF (preserving the periodicity of 55 bytes).
The interleaver is composed of I branches, cyclically connected to the input byte-stream by the input switch. Each branch shall be a First In First Out (FIFO) shift register, with depth (M * j) cells (where M = N/I, N = 55 = error protected frame length, I = 5 = interleaving depth, j = branch index). The cells of the FIFO shall contain 1 byte, and the input and output switches shall be synchronized.
For synchronization purposes, the first byte of each error protected packet shall be always routed into the branch "0" of the interleaver (corresponding to a null delay). The third byte of the SL-ESF payload (the byte immediately following R1b) shall be aligned to the first byte of an error protected packet.
The deinterleaver is similar, in principle, to the interleaver, but the branch indexes are reversed (i.e. branch 0 corresponds to the largest delay). The deinterleaver synchronization is achieved by routing the third data byte of the SL-ESF into the "0" branch.

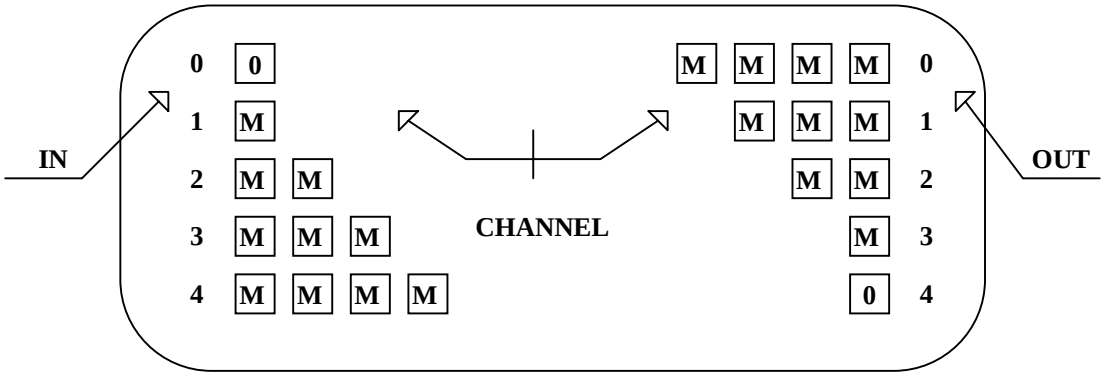

Figure 7.8-8 - Conceptual diagram of the convolutional interleaver and de-interleaver.

7.8.1.11 Definition of Slot Configuration Fields

Ranging Control Slot Indicator (b0) - When this bit is active (b0 = 1), the first three slots of upstream channel "x" which correspond to the occurrence of the next 3 msec (6 ms for 256 kb/s US) period are designated as ranging control slots. A ranging control message may be transmitted in the second ranging control slot, and the first and third ranging control slots may not be used for transmission (guard band for ranging operations).
Slot Boundary Definition field (b1-b6) - Slot types are assigned to upstream slots using bits b0-b6. The slots are grouped into regions within the 3 msec (6 ms for 256 kb/s US) period such that slots of a similar type are contained within the same region. The order of the regions is Ranging slot, Contention based slots, Reserved slots and Contentionless based slots. If a ranging slot is available within a 3 msec (6 ms for 256 kb/s US) period it will consist of the first three slot times in the 3 msec period. A ranging slot is indicated by b0 = 1. The boundaries between the remaining regions of the 3 msec are defined by b1-b6. The boundaries are defined in Figure 7.8-9.

Copyright International Organization for Standardization
Provided by IHS under license with ISO
No reproduction or networking permitted without license from IHS Not for Resale

Boundary 0	
	slot 1
Boundary 1	
	slot 2
Boundary 2	
	slot 3
Boundary 3	
	slot 4
Boundary 4	
	slot 5
Boundary 5	
	slot 6
Boundary 6	
	slot 7
Boundary 7	
	slot 8
Boundary 8	
	slot 9
Boundary 9	

Figure 7.8-9 - Boundary Definitions

The boundary positions are defined by b1-b6 in Figure 7.8-10,
where row = Contention based / Reserved region boundary
and column = Reserved packet /Contentionless based region boundary
(example: b0 = 0, b1-b6 = 22: Contention (1-2), Reserved (3-5), Contentionless (6-9))

	0	**1**	**2**	**3**	**4**	**5**	**6**	**7**	**8**	**9**
0*	**0**	**1**	**2**	**3**	**4**	**5**	**6**	**7**	**8**	**9**
1*		**10**	**11**	**12**	**13**	**14**	**15**	**16**	**17**	**18**
2*			**19**	**20**	**21**	**22**	**23**	**24**	**25**	**26**
3				**27**	**28**	**29**	**30**	**31**	**32**	**33**
4					**34**	**35**	**36**	**37**	**38**	**39**
5						**40**	**41**	**42**	**43**	**44**
6							**45**	**46**	**47**	**48**
7								**49**	**50**	**51**
8									**52**	**53**
9										**54**

(*) note: When the ranging control slot indicator (b0) is set to “1”, the values in rows 0 - 2 are illegal values, and values in row 3 means that there are no contention slots, because slots 1-3 are defined as ranging control slots.

Figure 7.8-10 - Slot Boundary Definition field values

The remaining values of the Slot Boundary Definition Field are provided in Figure 7.8-11.

 © ISO/IEC 1999 - All rights reserved

--`,,```,,,,````-`-`,,`,,`,`,,`---

Copyright International Organization for Standardization
Provided by IHS under license with ISO
No reproduction or networking permitted without license from IHS Not for Resale

b1-b6 value	Ranging Control slots	Contention slots	reservation slots	Contentionless slots
55	**1-6**	**7-9**	**-**	**-**
56	**1-6**	**7-8**	**-**	**9**
57	**1-6**	**7**	**8-9**	**-**
58	**1-6**	**7**	**8**	**9**
59	**1-6**	**7**	**-**	**8-9**
60	**1-6**	**-**	**7-8**	**9**
61	**1-6**	**-**	**7**	**8-9**
62	**1-6**	**-**	**-**	**7-9**
63	**1-9**	**-**	**-**	**-**

Note: For b1-b6 = 55 - 63, b0 must be set to 1.

Figure 7.8-11 - Additional Slot Boundary Definition field values for extended Range Control Slots

The values in Figure 7.8-10 and Figure 7.8-11 are derived from b1-b6 in the following manner:

$$b1 + (b2 * 2) + (b3 * 4) + (b4 * 8) + (b5 * 16) + (b6 * 32)$$

When the upstream data channel is a 256 kbit/s data channel, then only the first three slot boundary positions are valid. In this case, only the first three rows and columns in Figure 7.8-10 are valid, and Figure 7.8-11 is not valid. When the upstream data channel is a 3.088 Mbit/s data channel, each slot boundary definition field applies to 9 slots within the 3 msec period. In this case, there will be two slot boundary definition fields which define the 3 msec period.

Slot Reception Indicators (b7 - b15) - When a slot reception indicator is active ("1"), this indicates that a cell was received without collision. The relationship between a given US slot and its indicator is shown in Table 7-25. When the indicator is inactive ("0"), this indicates that either a collision was detected or no cell was received in the corresponding upstream slot.

Table 7-25 - Relationship of US slot to DS Indicator

	1.544Mbit/s Downstream	3.088 Mbit/s Downstream
256 kbit/s Upstream	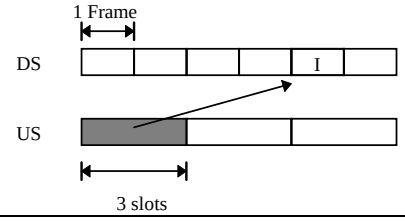	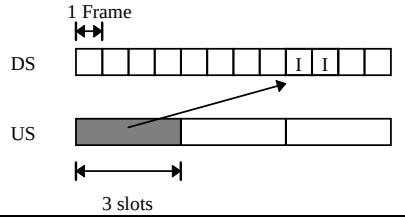
1.544 Mbit/s Upstream	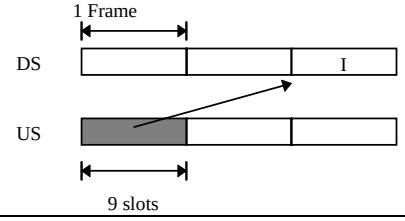	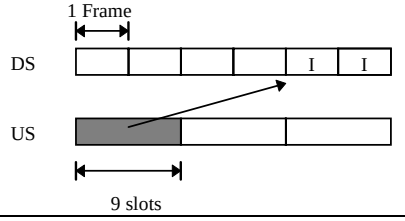
3.088 Mbit/s Upstream	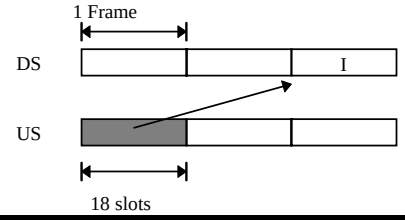	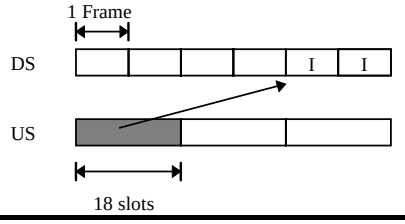
Notes	1) 'I' indicates the downstream frame(s) in which Indicators (contained within the MAC Flag Sets) are sent. These indicators control the upstream slots in the shaded area. 2) In the 3.088 downstream, two successive frames contain MAC Flag Sets 0..15 1. Two successive MAC Flag Sets are used to control the 18 slots of a 3.088 upstream channel.	

Copyright International Organization for Standardization
Provided by IHS under license with ISO
No reproduction or networking permitted without license from IHS Not for Resale

Reservation Control (b16-b17) - When the reservation control field has the value of 0, no reservation attempts are allowed to be transmitted on the corresponding QPSK upstream channel during the slot positions associated with the next 3 msec (6 ms for 256 kb/s US) period. When the reservation control field has the value of 1, reservation attempts can be made. The values 2 and 3 are reserved.
CRC 6 Parity (b18-b23) - This field contain a CRC 6 parity value calculated over the previous 18 bits. The CRC 6 parity value is described in the SL-ESF frame format Section 7.8.1.6.
In the case where there is more than one OOB DS QPSK channel related to an upstream QPSK channel, the SL-ESF overhead bits and the payload R-bytes shall be identical in those OOB DS channels, with the exception of the overhead CRC (C1-C6) bits, which are specific to each of those OOB DS channels. Such related DS channels shall be synchronized.
The MAC messages that are required to perform the MAC functions for the upstream channel shall be transmitted on each of its related OOB DS channels.

7.8.1.12 ATM Cell Structure

The format for each ATM cell structure is illustrated in Figure 7.8-12. This structure and field coding shall be consistent with the structure and coding given in [ITU-T I.361] for ATM UNI, both for the ATM and non-ATM based passband bi-directional PHY on coax.

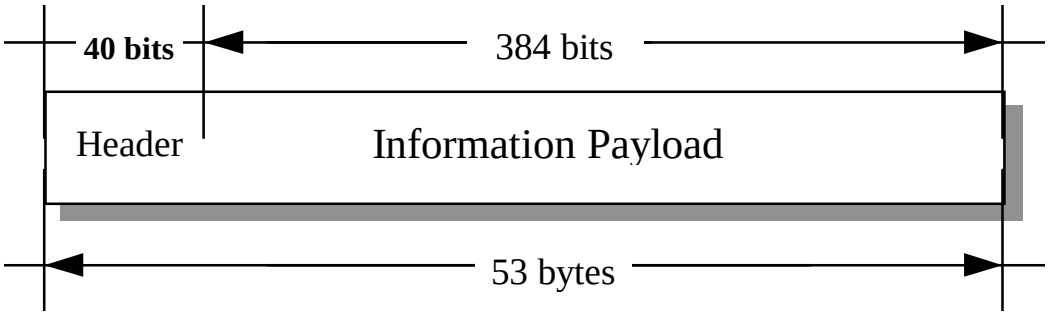

Figure 7.8-12 - ATM Cell Structure

7.8.2 Upstream Physical Interface Specification

To carry upstream information S2, a combination of quaternary phase shift keying (QPSK) and a Time Division Multiplexing structure are specified. QPSK is specified due to its increased error performance, its spectral efficiency, and its ability to be transmitted at higher than average power levels.

7.8.2.1 Quaternary Phase Shift Keying (QPSK)

An overview of QPSK modulation has been provided in the downstream QPSK modulation section.
The QPSK signal parameters are:

RF bandwidth	$BW= (f_b / 2) * (1 + \alpha)$
Occupied RF Spectrum	$[f_c - BW/2, f_c + BW/2]$
Symbol Rate	$f_s = f_b / 2$
Nyquist Frequency	$f_N = f_s / 2$

with f_b = bit rate, f_c = carrier frequency and α = excess bandwidth.
For all three bit rates: 256 kbit/s (Grade A), 1.544 Mbit/s (Grade B) and 3.088 Mbit/s (Grade C), the Power Spectrum at the QPSK transmitter shall comply to the Power Spectrum Mask given in Table 7-26 and Figure 7.8-13. The Power Spectrum Mask shall be applied symmetrically around the carrier frequency.

Table 7-26 - QPSK Upstream Transmitter Power Spectrum

$\lvert (f - f_c) / f_N \rvert$	Power Spectrum
$\leq 1-\alpha$	0 ± 0.25 dB
at 1	-3 ± 0.25 dB
at $1+\alpha$	≤ -21 dB
≥ 2	≤ -40 dB

 © ISO/IEC 1999 - All rights reserved

--`,,```,,,,````-`-`,,`,,`,`,,`---
Copyright International Organization for Standardization
Provided by IHS under license with ISO
No reproduction or networking permitted without license from IHS
Not for Resale

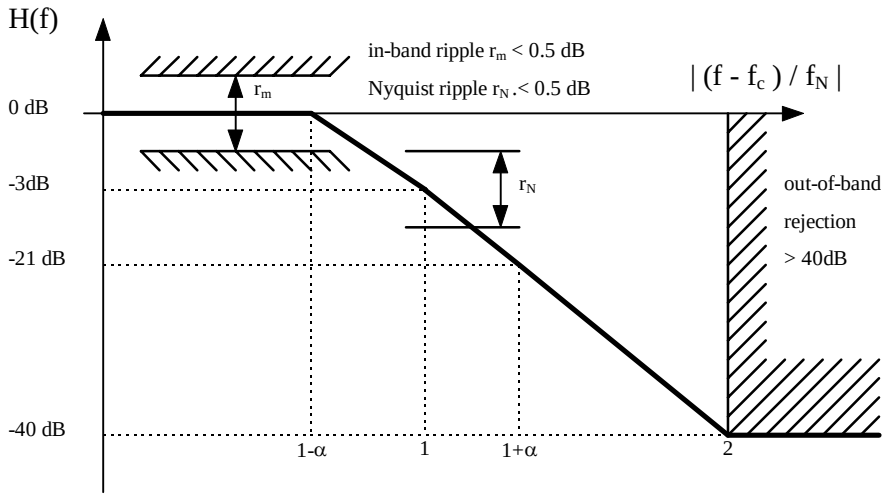

Figure 7.8-13 - QPSK Upstream Transmitter Power Spectrum

The specifications which shall apply to QPSK modulation for the upstream channel are given in Table 7-27.

Copyright International Organization for Standardization
Provided by IHS under license with ISO
No reproduction or networking permitted without license from IHS Not for Resale

Table 7-27 - Specifications for QPSK Modulation (Upstream)

Transmission Rate	Three grades of modulation transmission rate are specified: Grade Rate A 256 kbit/s B 1.544 Mbit/s C 3.088 Mbit/s A QPSK modulator (transmitter) shall support either A and B grades of transmission rate or A, B, and C grades of transmission rate. A QPSK demodulator (receiver) shall support at least one grade A or B, but may support any combination of grades.
Modulation	Differentially encoded QPSK
Transmit Filtering	α = 0.30 square root raised cosine for Grade A (256 kbit/s), Grade B (1.544 Mbit/s), and Grade C (3.088 Mbit/s)
Channel Spacing	200 kHz for Grade A (256 kbit/s) 1 MHz for Grade B (1.544 Mbit/s) 2 MHz for Grade C (3.088 Mbit/s)
Frequency Step Size	50 kHz for Grade A, Grade B, and Grade C
Unique Word	The unique word is four bytes: CC CC CC 0D hex, transmitted in this order.
Randomization	The unique word shall be sent in the clear. After addition of the FEC bytes, randomization shall apply only to the 53-byte payload area and 6 FEC bytes, with the randomizer performing modulo-2 addition of the data with a pseudo-random sequence. The generating polynomial is $x^6 + x^5 + 1$ with seed all ones. Byte/serial conversion shall be MSB first. The 472-bit binary sequence generated by the shift register starts with 00000100… The first "0" is to be added to the first bit after the unique word. Randomizer: Serial Input 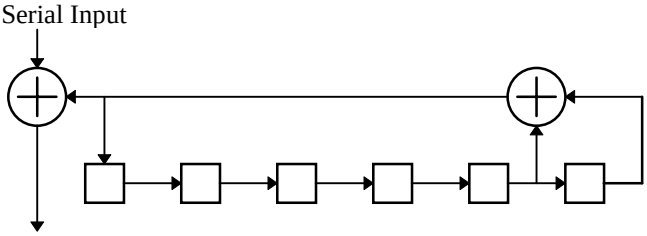 Serial Output A complementary non self-synchronizing derandomizer is used in the receiver to recover the data. The derandomizer shall be enabled after detection of the unique word. Derandomizer: Serial Input 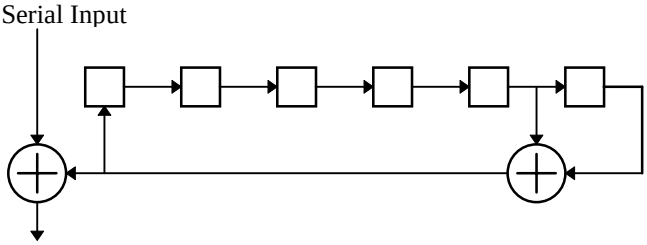 Serial Output
Differential Encoding	Bytes entering the byte-to-symbol encoder are divided into four bit pairs, each bit pair generating one QPSK symbol. Byte boundaries coincide with bit pair boundaries: that is, no bit pairs overlap two bytes. The bit pair corresponding to the MSBs of the byte is sent first. Within each bit pair, the more significant bit is referred to a 'A' and the less significant as 'B'. The differential encoder shall accept bits (A,B) in sequence, and generate phase changes as follows: A B Phase Change 0 0 none 0 1 + 90 degrees 1 1 180 degrees 1 0 - 90 degrees

 © ISO/IEC 1999 - All rights reserved

--`,,```,,,,````-`-`,,`,,`,`,,`---
Copyright International Organization for Standardization
Provided by IHS under license with ISO
No reproduction or networking permitted without license from IHS
Not for Resale

Signal Constellation	The outputs I, Q from the differential encoder map to the phase states as follows: 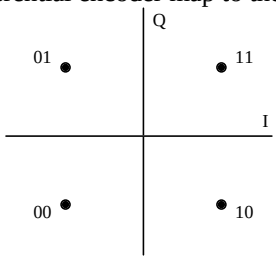 This constellation is used for the detection of the Unique Word, which is not differentially encoded.
Frequency Range	8 - 26.5 MHz. The transmitter shall operate over the entire specified frequency range.
Frequency Stability	+/- 50 ppm measured at the upper limit of the frequency range
Symbol Rate Accuracy	+/- 50 ppm
Transmitter Power Spectrum Mask	A common mask for all three bit rates: 256 kbit/s (Grade A), 1.544 Mbit/s (Grade B) and 3.088 Mbit/s (Grade C) is given in Table 7-26 and Figure 7.8-13.
Carrier Suppression when Transmitter Active	> 30 dB
Carrier Suppression when Transmitter Idle	The Carrier Suppression shall be more than 60 dB below nominal power output level, over the entire power output range and 30 dB right after or before transmission. Details are shown in the figure below. NOTE: Idle Transmitter Definition: A terminal is considered to be idle if it is 3 slots before an imminent transmission or 3 slots after its most recent transmission. 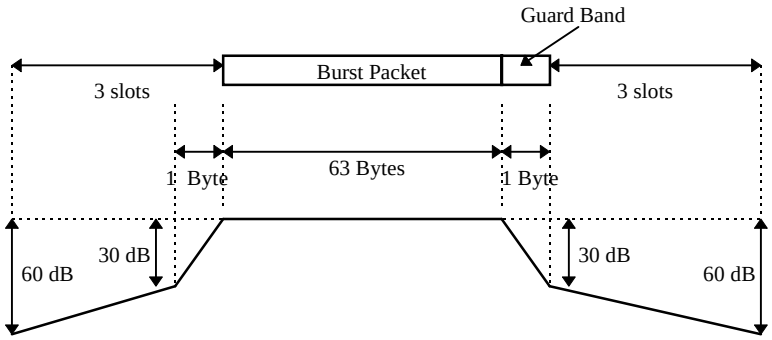
I/Q Amplitude Imbalance	< 1.0 dB
I/Q Phase Imbalance	< 2.0 degree
Transmit Power Level at the modulator output (upstream)	85 - 113 dBmicroV (RMS) (75 Ohm)
C/N at the demodulator input at the A3 reference point (Nyquist bandwidth, white noise)	$\geq$ 20 dB @ 1x10E-6 packet loss (after error correction) NOTE: A packet loss occurs when one or more bit per packet (after error correction) are uncorrectable.

7.8.2.2 Coaxial Cable Impedance

The coaxial cable nominal impedance shall be 75 Ohm over the frequency range as specified in Table 7-27.

7.8.2.3 Media Interface Connector

At the user device, the jack/socket shall be a IEC 169-2 female connector (75 Ohm) or F-Type female connector (75 Ohm).

Copyright International Organization for Standardization
Provided by IHS under license with ISO
No reproduction or networking permitted without license from IHS Not for Resale

7.8.2.4 Time Division Multiple Access (TDMA)

TDMA allows a DAVIC NIU/STB access onto a signaling channel for upstream S2 information. The TDMA technique is used for communication between the NIU/STB and the Service provider System. TDMA is based on dividing access by multiple set-top units onto a shared signaling channel. This technique provides a negotiated bandwidth allocation slot access method.

7.8.2.4.1 Slot Definition

The TDMA technique utilizes a slotting methodology which allows the transmit start times to be synchronized to a common clock source. Synchronizing the start times increases message throughput of this signaling channel since the message packets do not overlap during transmission. The period between sequential start times are identified as slots. Each slot is a point in time when a message packet can be transmitted over the signaling link. The time reference for slot location is received via the downstream channels generated at the Delivery System and received simultaneously by all set-top units. Since all NIU/STBs reference the same time base, the slot times are aligned for all NIU/STBs. However, since there is propagation delay in any transmission network, a time base ranging method accommodates deviation of transmission due to propagation delay.
The upstream slot rates are 3000 upstream slots/sec when the upstream data rate is 1.544 Mbit/s and 500 upstream slots/sec when the upstream data rate is 256 kbit/s.
The format of the upstream slot is shown in Figure 7.8-14. A Unique Word (UW) (4 bytes) provides a burst mode acquisition method. The payload area (53 bytes) contains a single message cell as described previously. The RS Parity field (6 bytes) provides t=3 Reed Solomon protection RS(59,53) over the payload area. The Guard band (1 byte) provides spacing between adjacent packets.
Reed-Solomon encoding shall be performed on each ATM cell with T=3. This means that 3 erroneous byte per ATM cell can be corrected. This process adds 6 parity bytes to the ATM cell to give a code word of (59,53). Reed-Solomon encoding is performed on the ATM cell before upstream data randomization. The shortened Reed-Solomon code shall be implemented by appending 196 bytes, all set to zero, before the information bytes at the input of a (255,249) encoder; after the coding procedure these bytes are discarded.
The Reed-Solomon code shall have the following generator polynomials:

Code Generator Polynomial: $g(x) = (x + \mu^0)(x + \mu^1) (x + \mu^2) ... (x + \mu^5)$, **where** μ**=02hex**

Field Generator Polynomial: $p(x) = x^8 + x^4 + x^3 + x^2 + 1$

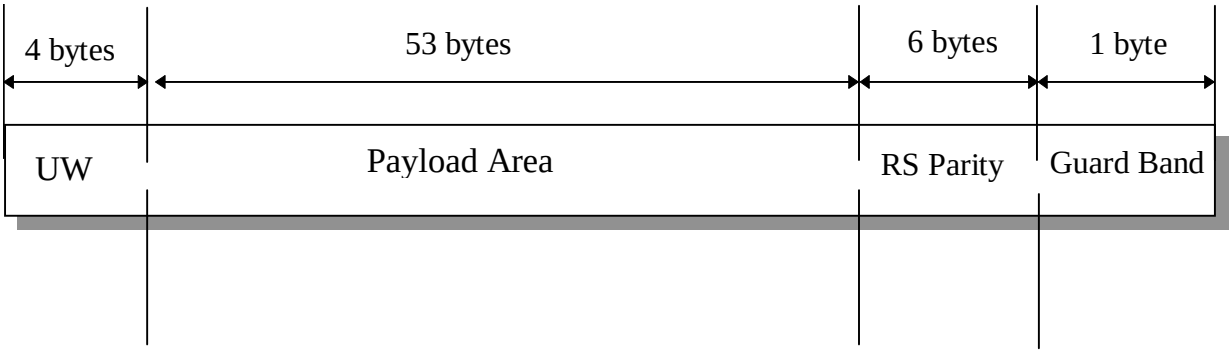

Figure 7.8-14 - Upstream Slot Structure

The format of the message cell is indicated in section 7.8.1.12. This structure and field coding shall be consistent with the structure and coding given in [ITU-T I.361] for ATM UNI.

7.8.2.4.2 Slot Definition Assignment

Since the TDMA signaling link is used by NIU/STBs that are engaged in interactive sessions, the number of available message slots on this channel is dependent on the number of simultaneous users. When messaging slots are not in use, an NIU/STB may be assigned multiple message slots for increased messaging throughput. Additional slot assignments are provided to the NIU/STB from the downstream signaling information flow.

7.8.2.5 Contention Based Access

Upstream session related control information S3 and Network Related Control information S4 are provided via a service channel using quaternary phase shift keying (QPSK) along with a contention-based protocol.

 © ISO/IEC 1999 - All rights reserved

Copyright International Organization for Standardization
Provided by IHS under license with ISO
No reproduction or networking permitted without license from IHS
Not for Resale

Contention based access is used for managing contention of transmission over a signaling link. For the DAVIC system, this protocol is utilized as a technique for signaling between an NIU/STB and the Delivery system's Service-Related Control function. Contention based access provides instant channel allocation for the NIU/STB. The Contention based technique is used for multiple subscribers that will have equal access to the signaling channel. It is probable that simultaneous transmissions will occur. The Contention based technique provides resolution of signaling throughput when simultaneous transmissions occur.

7.8.2.5.1 Slot Definition

The slot definition utilized for the S3 service flow is the same as that defined previously.

7.8.2.5.2 Positive Acknowledgment

For each ATM cell transmitted by the NIU/STB, a positive acknowledgment is sent back by the NRC, utilizing the reception indicator field, for each successfully received ATM cell. In contention based access mode, a positive acknowledgment indicates that a collision did not occur. A collision occurs if two or more NIU/STBs attempt ATM cell transmission during the same slot. A collision will be assumed if a NIU/STB does not receive a positive acknowledgment. If a collision occurs, then the
NIU/STB shall initiate a retransmission procedure or use a reservation or contentionless slot, as previously assigned, to retransmit the cell.

7.8.2.6 Relationship between Downstream MAC Control Channels and Upstream Channels

Up to 8 QPSK Upstream channels can be related to each downstream channel which is designated as a MAC control channel. This relationship consists of the following items:

(1) Each of these related upstream channels share a common slot position. This reference is based on 1 millisecond time markers that are derived via information transmitted via the downstream MAC control channel.
(2) Each of these related upstream channels derive slot numbers from information provided in the downstream MAC control channel.
(3) The Messaging needed perform MAC functions for each of these related upstream channels is transmitted via the downstream MAC control channel.

7.8.2.7 Slot Location and Alignment for the QPSK Upstream Channels

Transmission on each QPSK upstream channel is based on dividing access by multiple NIU/STBs by utilizing a negotiated bandwidth allocation slot access method. A slotting methodology allows the transmit slot locations to be synchronized to a common slot position reference, which is provided via the related downstream MAC control channel. Synchronizing the slot locations increases message throughput of the upstream channels since the ATM cells do not overlap during transmission.
The slot position reference for upstream slot locations is received via the related downstream MAC control channel by each NIU/STB. Since each NIU/STB receives the downstream slot position reference at a slightly different time, due to propagation delay in the transmission network, slot position ranging is required to align the actual slot locations for each related upstream channel. The upstream slot rates are 3000 upstream slots/sec when the upstream data rate is 1.544 Mbit/s and 500 upstream slots/sec when the upstream data rate is 256 kbit/s.
The number of slots available in any one second is given by

number of slots/sec = (upstream data rate / 512) + extra guardband

where extra guardband may be designated between groups of slots for alignment purposes.

7.8.2.7.1 Upstream Data Rate - 1.544 Mbit/s

In the case where the upstream data rate is 1.544 Mbit/s, the upstream slots are numbered as shown below, where k is a multiple of 9.

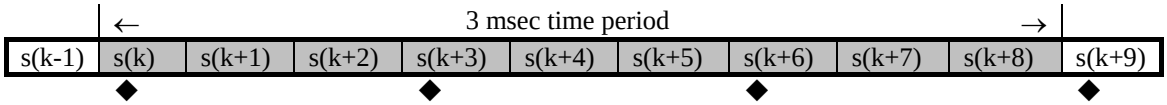

3 slot position references (downstream) per 3 msec time period

The relationship between the received slot position reference and the actual slot transmit position is given by:

slot_transmit_position = slot_position_reference + slot_position_offset

Copyright International Organization for Standardization
Provided by IHS under license with ISO
No reproduction or networking permitted without license from IHS Not for Resale

where slot_position_offset is derived from the `Time_Offset_Value` provided via the Range_and_Power_Calibration_Message.

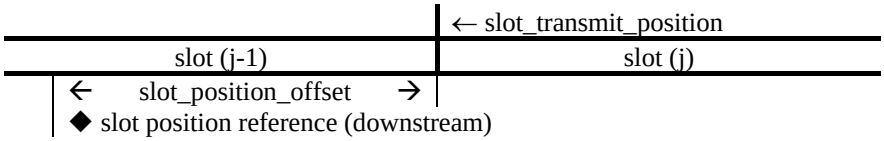

In the case where the upstream data rate is 1.544 Mbit/s, the actual slot transmission locations are given by

slot_transmission_location (m) = slot_transmission_position + (m * 512);

where m = 0,1,2; is the position of the slot with respect to the slot_transmission_position

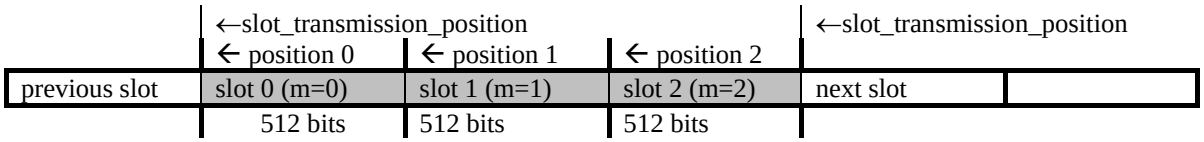

7.8.2.7.2 Upstream Data Rate - 256 kbit/s

In the case where the upstream data rate is 256 kbit/s, the upstream slots are numbered as shown below, where k is a multiple of 3.:

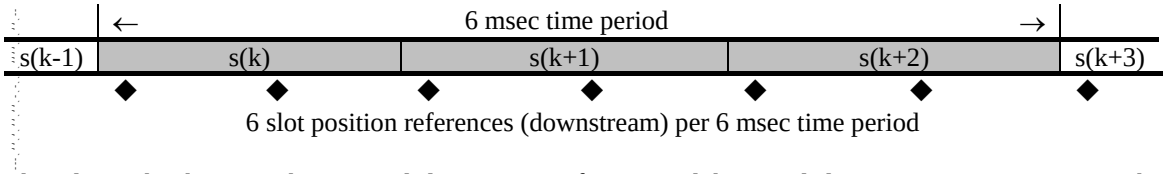

The relationship between the received slot position reference and the actual slot transmit position is given by:

slot_transmit_position = slot_position_reference (integer) + slot_position_offset

where only the slot_position_references corresponding to integer values are valid and

The slot_position_offset is derived from the `Time_Offset_Value` provided via the Range_and_Power_Calibration_Message.

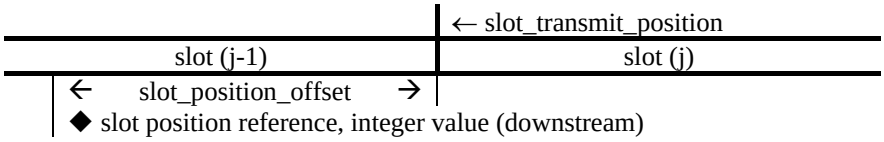

In the case where the upstream data rate is 256 kbit/s, the actual slot transmission locations correspond directly to the integer valued slot position references.

7.8.2.7.3 Upstream Data Rate - 3.088 Mbit/s

In the case where the upstream data rate is 3.088 Mbit/s, the upstream slots are numbered as shown below, where k is a multiple of 18.

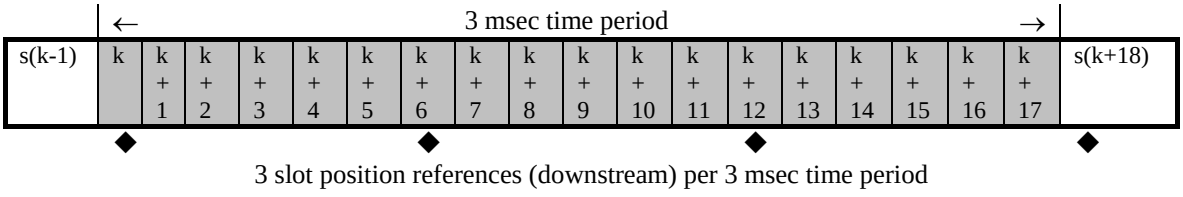

The relationship between the received slot position reference and the actual slot transmit position is given by:

slot_transmit_position = slot_position_reference + slot_position_offset

where slot_position_offset is derived from the `Time_Offset_Value` provided via the Range_and_Power_Calibration_Message.

 © ISO/IEC 1999 - All rights reserved

Copyright International Organization for Standardization
Provided by IHS under license with ISO
No reproduction or networking permitted without license from IHS
Not for Resale

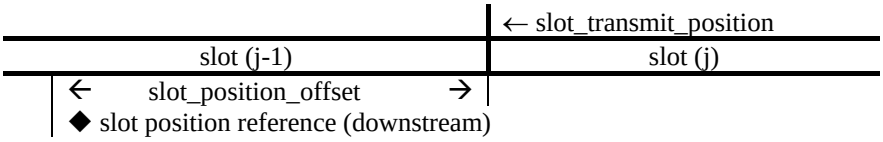

In the case where the upstream data rate is 3.088 Mbit/s, the actual slot transmission locations are given by
slot_transmission_location (m) = slot_transmission_position + (m * 512);
where m = 0,1,2,3,4,5; is the position of the slot with respect to the slot_transmission_position

	←slot_transmission_position						←slot_transmission_position
	← pos 0	← pos 1	← pos 2	← pos 3	← pos 4	← pos 5	
previous slot	slot 0 (m=0)	slot 1 (m=1)	slot 2 (m=2)	slot 3 (m=3)	slot 4 (m=4)	slot 5 (m=5)	next slot
	512 bits	512 bits	512 bits	512 bits	512 bits	528 bits	

7.8.3 Media Access Control Functionality

This section contains the specifications for Media Access Control (MAC) Protocol to be used for communication across a Hybrid Fiber Coax (HFC) network. It specifies the communication between Network Related Control (NRC) at the Access Subnetwork and the Network Interface Unit/Set Top Box (NIU/STB).

7.8.3.1 MAC Reference Model

The scope of this section is limited to the definition and specification of the MAC Layer protocol. The detailed operations within the MAC layer are hidden from the above layers.
This section focuses on the required message flows between the NRC and the NIU/STB for Media Access Control. These areas are divided into three categories: Initialization, Provisioning and Sign On Management, Connection Management and Link Management.

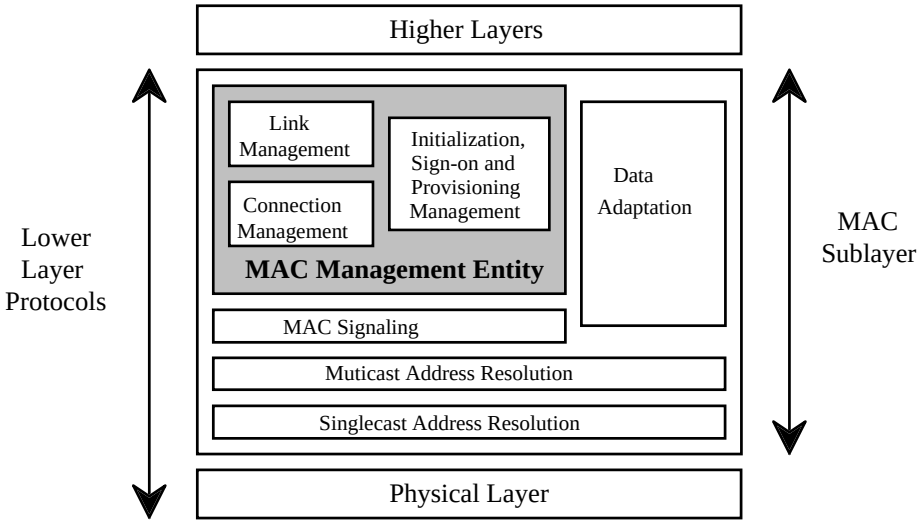

Figure 7.8-15 - MAC Reference Model (source IEEE 802.1F LAN and MAN)

7.8.3.2 Upstream and Downstream Channel Types

This section defines the upstream and downstream channel types supported by the Media Access Control Protocol.

Copyright International Organization for Standardization
Provided by IHS under license with ISO
No reproduction or networking permitted without license from IHS Not for Resale

7.8.3.2.1 Downstream Out of Band Channel Requirements

The Media Access Control Protocol supports multiple downstream Channels. In instances where multiple Channels are used, the NRC shall specify at least one Out of Band frequency where NIU/STBs perform Initialization, Provisioning and Sign On Functions.
In instances where more than one Out of Band frequency are available for Initialization, Provisioning and Sign On Functions, each frequency shall have a unique Provider Identifier assigned by the Access Provider. In instances where only a single frequency is in use, the NRC shall utilize that frequency for Initialization, Provisioning and Sign On functions.

7.8.3.2.2 Upstream Channel Requirements

The Media Access Control protocol supports multiple upstream channels. One of the upstream channels shall be designated the Service Channel. The Service Channel shall be used by NIU/STBs entering the network via the Initialization, Provisioning and Sign-On procedure. The remaining upstream channels shall be used for upstream data transmission. In cases where only one upstream channel is utilized, the functions of the Service Channel shall reside in conjunction with regular upstream data transmission.

7.8.3.3 MAC Information Transport

To support the delivery of MAC related information to and from the NIU/STB, a dedicated Virtual Channel shall be utilized. The VPI,VCI for this channel shall be 0x000,0x0021.
AAL5 (as specified in [ITU-T I.363]) adaptation shall be used to encapsulate each MAC SDU in ATM cells. All upstream MAC messages shall be restricted to a single cell. A single cell MAC SDU can accommodate up to 40 bytes. All DS MAC messages shall be less than or equal to 120 bytes.
Since MAC related information is terminated at the NIU/STB and NRC a privately defined message structure will be utilized. The format of the MAC message structure is illustrated below.

Note: All messages are sent most significant bit first.

MAC_message(){	Bits	Bytes	Bit Number / Description
Message_Configuration		**1**	
Protocol_Version	5		7..3:{enum}
Syntax_Indicator	3		2..0:{enum}
Message_Type	**8**	**1**	
if (Syntax_Indicator == MAC_Address_Included) {			
MAC_Address	**48**	**6**	
}			
MAC_Information_Elements ()		**N**	
}			

Protocol Version
`Protocol_Version` is a 5 bit enumerated type used to identify the current MAC version.

```
enum Protocol_Version          {     DAVIC 1.0 Compliant Device,
                                     DAVIC 1.1 Compliant Device,
                                     DAVIC 1.2 Compliant Device,
                                     DAVIC 1.3 Compliant Device,
                                     Reserved 4..31    };
```

Syntax Indicator
`Syntax_Indicator` is a 3-bit enumerated type that indicates the addressing type contained in the MAC message. For upstream MAC messages, the NIU/STB's MAC address shall always be included.

```
enum Syntax_Indicator          {     No_MAC_Address,
                                     MAC_Address_Included,
                                     Reserved 2..7     };
```

MAC Address
`MAC_Address` is a 48-bit value representing the unique MAC address of the NIU/STB.

 © ISO/IEC 1999 - All rights reserved

Copyright International Organization for Standardization
Provided by IHS under license with ISO
No reproduction or networking permitted without license from IHS Not for Resale

MAC Information Elements
`MAC_Information_Elements` is a multiple byte field that contains the body of one and only one MAC message.

7.8.3.4 MAC Message Types

All MAC message types are listed in Table 7-28. The MAC message types are divided into the logical MAC states of Initialization, Sign On, Connection Management and Link Management. Message types in the range 0xC0 to 0xFF will remain user defined and undefined by DAVIC. Messages in Italic represent upstream transmission from NIU/STB to NRC. MAC messages are sent using Broadcast or Singlecast Addressing. Singlecast address shall utilize the 48 bit MAC address.

Table 7-28 - List of MAC Messages

Message Type Value	Message Name	Addressing Type
0x01-0x1F	**MAC Initialization, Provisioning and Sign-On Message**	
0x01	Provisioning Channel Message	Broadcast
0x02	Default Configuration Message	Broadcast
0x03	Sign-On Request Message	Broadcast
0x04	*Sign-On Response Message*	Singlecast
0x05	Ranging and Power Calibration Message	Singlecast
0x06	*Ranging and Power Calibration Response Message*	Singlecast
0x07	Initialization Complete Message	Singlecast
0x08-0x1F	[Reserved]	
0x20-0x3F	**MAC Connection Establishment and Termination Msgs**	
0x20	Connect Message	Singlecast
0x21	*Connect Response Message*	Singlecast
0x22	*Reservation Request Message*	Singlecast
0x23	Reservation Acknowledge Message	Broadcast
0x24	Connect Confirm Message	Singlecast
0x25	Release Message	Singlecast
0x26	*Release Response Message*	Singlecast
0x27	*Idle Message*	Singlecast
0x28	Reservation Grant Message	Broadcast
0x29	Reservation ID Assignment	Singlecast
0x2A	*Reservation Status Request*	Singlecast
0x2B	*Reservation ID Response Message*	Singlecast
0x2C-0x3F	[Reserved]	
0x40-0x5F	**MAC Link Management Msgs**	
0x40	Transmission Control Message	Singlecast
0x41	Reprovision Message	Singlecast
0x42	*Link Management Response Message*	Singlecast
0x43	Status Request Message	Singlecast
0x44	*Status Response Message*	Singlecast
0x45-0x5F	[Reserved]	
0x60-0xBF	**MAC Reserved Messages**	
0xC0-0xFF	**MAC User Defined Messages**	

7.8.3.5 MAC Initialization, Provisioning and Sign On

This section defines the procedure for Initialization, Provisioning and Sign On that the MAC shall perform during power on or Reset.

7.8.3.5.1 Initialization and Provisioning

1. Upon a NIU/STB becoming active (i.e. powered up), it must first find the current provisioning frequency. The NIU/STB shall receive the **<MAC> Provisioning Channel Message**. This message shall be sent aperiodically on all downstream OOB channels when there are multiple channels. In the case of only a single channel, the message shall indicate the current channel is to be utilized for Provisioning. Upon receiving this message, the NIU/STB shall tune to the Provisioning Channel.
2. After a valid lock indication on a Provisioning Channel, the NIU/STB shall await the **<MAC> DEFAULT CONFIGURATION MESSAGE**. When received, the NIU/STB shall configure its parameters as defined in the default configuration message. The Default Configuration Parameters shall include default timer values,

Copyright International Organization for Standardization
Provided by IHS under license with ISO
No reproduction or networking permitted without license from IHS Not for Resale

default power levels, default retry counts as well as other information related to the operation of the MAC protocol.

Figure 7.8-16 below shows the signaling sequence.

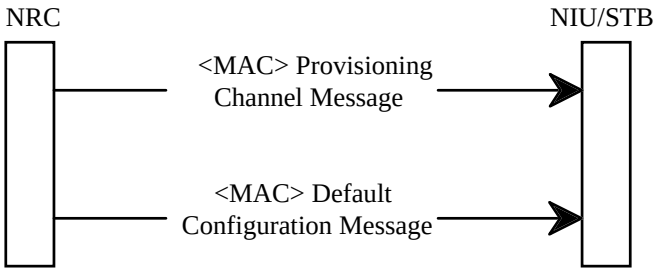

Figure 7.8-16 - Initialization and Provisioning Sequence

7.8.3.5.2 Sign On and Calibration

The NIU/STB shall Sign On via the Sign-On Procedure. A state diagram for Ranging and Calibration is given in Figure. The signaling flow for Sign-On is shown in Figure and described below. Reception Indicators shall be ignored during the Sign-On and Calibration process.

1. The NIU/STB shall tune to the downstream Provisioning channel and the upstream service channel with the information provided in the Initialization and Provisioning sequence.
2. The NIU/STB shall await the **<MAC> Sign-On Request Message** from the Network Control Entity. The NIU/STB shall utilize Contention based entry on the service channel to access the network.
3. Upon receiving the **<MAC> Sign-On Request Message**, the NIU/STB shall respond with the **<MAC> Sign-On Response Message.** The Sign-On Response Message shall be transmitted on a Ranging Control Slot. The NIU/STB shall use the Min_Power_Level contained in the <MAC> Default Configuration Message when first signing on. Subsequent sign-ons can use the parameters from a successful calibration sequence, but these parameters must be volatile.
4. The NRC, upon receiving the Sign-On Response Message shall validate the NIU/STB and send the **<MAC> Ranging and Power Calibration Message.**
5. The NIU/STB shall respond to the **<MAC> Ranging and Power Calibration Message** with the **<MAC> Ranging and Power Calibration Response Message.** The **<MAC> Ranging and Power Calibration Response Message** shall be transmitted on a Ranging Control Slot, or the reservation slot as indicated by the Ranging_Slot_Included field in the Ranging and Power Calibration Request Message.
6. The NRC shall send the **<MAC> Initialization Complete Message** when the NIU/STB is calibrated. The NIU/STB is assumed to be calibrated if the message arrives within a window of +/- 0.75symbols (upstream rate) and a power within a window of +/- 1.5 dB from their optimal value.

 © ISO/IEC 1999 - All rights reserved

Copyright International Organization for Standardization
Provided by IHS under license with ISO
No reproduction or networking permitted without license from IHS
Not for Resale

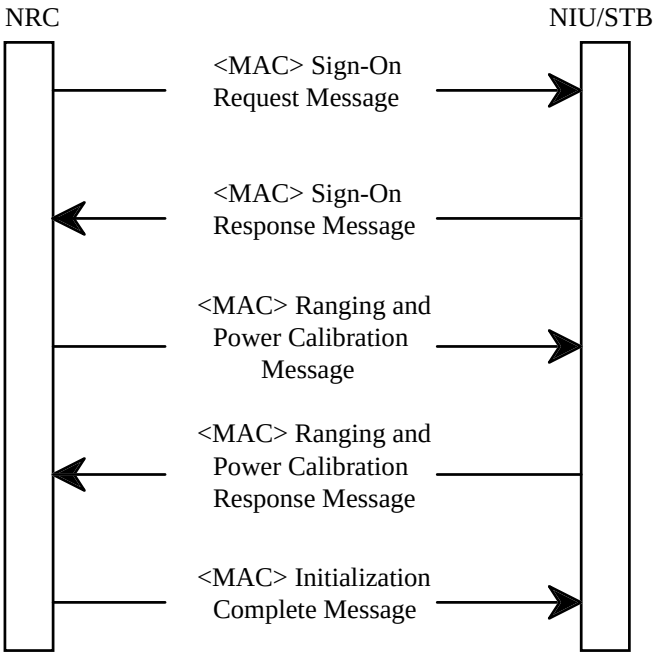

Figure 7.8-17 - Sign-On Messaging Sequence

Copyright International Organization for Standardization
Provided by IHS under license with ISO
No reproduction or networking permitted without license from IHS
Not for Resale

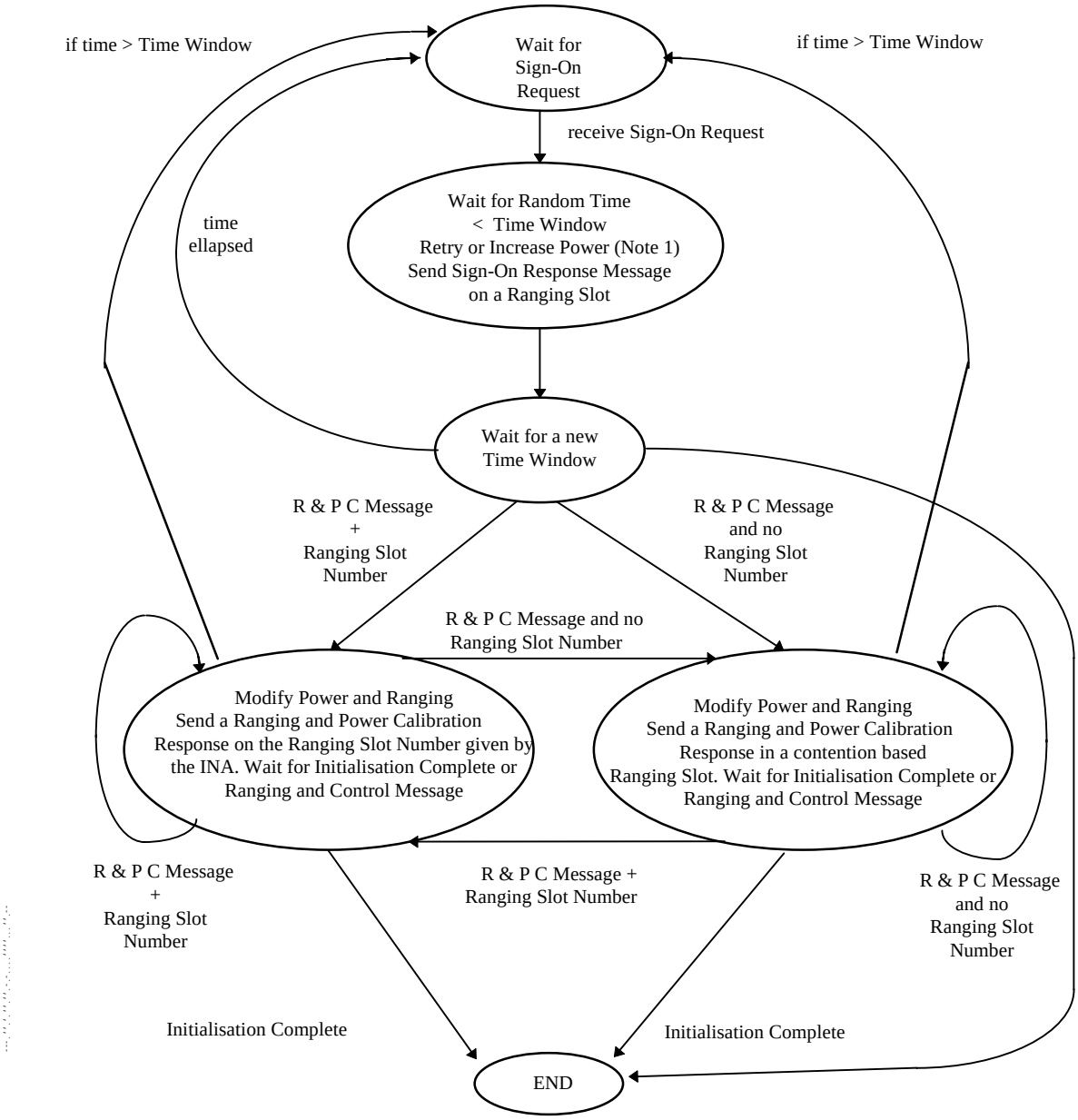

Figure 7.8-18 - State Diagram for Ranging and Calibration

Note 1: Before increasing power, the Backup Service Channel shall be used, if it differs in frequency from the service channel.

7.8.3.6 Connection Management

This section defines the MAC support for Connection Establishment and Release.

7.8.3.6.1 Connection Establishment

Once a NIU/STB has completed the Calibration State, it shall enter the Connection State. A low bit rate permanent connection can be assigned to a NIU/STB by the NRC. The NRC can assign an upstream channel for contention or contentionless based access to the network. In either case after the initial calibration procedure, the NRC provides a Default Connection to the NIU/STB that the NIU/STB shall utilize to communicate to the network. A given connection (identified by a Connection_ID) shall be assigned, at most, a single VPI/VCI. The message flow for such Connection Establishment is shown in Figure 7.8-19. The message format for Connection Establishment is described in Section 7.8.3.8.

 © ISO/IEC 1999 - All rights reserved

Copyright International Organization for Standardization
Provided by IHS under license with ISO
No reproduction or networking permitted without license from IHS
Not for Resale

For all the traffic sent contention access, a collision is assumed if the appropriate reception indicator of the slot used for transmission is not set. A counter at the NIU/STB records the number, denoted by backoff_exponent, of collisions encountered by a cell. The backoff_exponent counter starts from a value determined by the Min_Backoff_Exponent variable. The backoff_exponent is used to generate a uniform random number between 1 and 2^backoff_exponent. This random number is used to schedule retransmission of the collided cell. In particular, the random number indicates the number of contention access slots the NIU/STB shall wait before it transmits. The first transmission is carried out in a random cell within the contention based access region. If the counter reaches the maximum number, determined by the Max_Backoff_Exponent variable, the value of the counter remains at this value regardless of the number of subsequent collisions. After a successful transmission the backoff_exponent counter is reset to a value determined by the Min_Backoff_Exponent variable. The NRC is responsible for the operation of the random access algorithm. Informational Statement: The random access algorithm is unstable; the NRC is expected to have intelligence to detect an unstable state of the random access algorithm and to solve it.

In addition to the simple connect and release messages used to establish and remove connections, the MAC message set provides two additional messages to handle dynamic reallocation of bandwidth and channels. The Transmission Control Message and the Reprovision Message provide the ability to redefine the parameters of each connection individually or as group.

The existing messages allow reallocation of resources on the network for an individual STB. For example, the existing connections for a single STB may be removed, the channel changed, and new connections reestablished to the existing sessions. The Reprovision Message allows for modification of the current connection parameters including channel assignment. Gross reallocation of bandwidth or channels is provided by moving all connections from one channel to another channel at once. The Transmission Control Message provides a method to rapidly change the channel frequencies and other associated parameters for a single STB or all STBs assigned to a given channel. After being told to switch to a different upstream channel, the STB/NIU shall go to the state “Wait for Sign-On Request”, shown in Figure 7.8-18.

1. After Initialization, Provisioning and Sign On Procedures are complete, the NRC shall assign a default upstream and downstream connection to the NIU/STB. This connection can be assigned on any of the upstream channels except the upstream service channel ranging area. The NRC shall assign the default connection by sending the **<MAC> Connect Message** to the NIU/STB. This message shall contain the upstream connection parameters and downstream frequency on which the default connection is to reside. In the case of multiple connections, the US frequency shall be the same for all connections, and the OOB and IB frequencies shall be the same for all OOB and IB connections respectively.

2. The NIU/STB, upon receiving the **<MAC> Connect Message** shall tune to the required upstream and downstream frequencies and send the **<MAC> Connect Response Message** confirming receipt of the message. However, if the US frequency contained in the <MAC> Connect Message is different than the current US frequency, the NIU/STB shall enter the Sign-On procedure at the new frequency, with the same power and timing parameters and the Default_Connection_Established flag shall be set, and the NIU/STB shall send the <MAC> Connect Response Message after the <MAC> Initialization Complete Message.

3. Upon receipt of the **<MAC> Connect Message**, the NRC shall confirm the new connection to proceed by sending the **<MAC> Connect Confirm Message**.

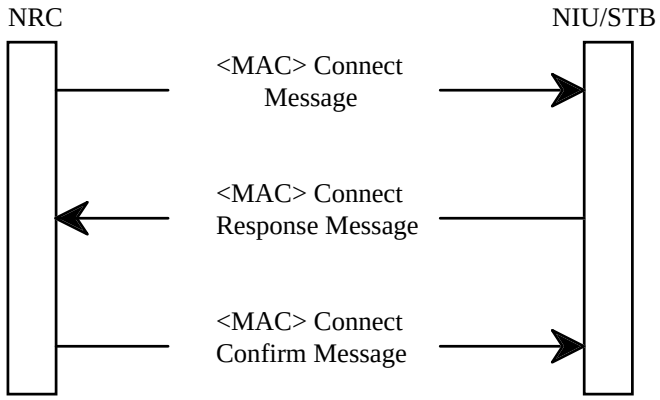

Figure 7.8-19 - Connection Establishment Signaling Sequence

Copyright International Organization for Standardization
Provided by IHS under license with ISO
No reproduction or networking permitted without license from IHS Not for Resale

Different access modes are provided to the NIU/STB within access regions specified by information contained in the slot boundary fields of the downstream superframes. The limits between access regions allow users to know when to send data on contention without risks of collision with contentionless type data. The NIU/STB shall not use slots that do not have the expected slot type identified by the qpsk_slot_configuration. The following rules define how to select access modes:

- Data connections:

When the NRC assigns a connection ID to the NIU/STB, it either specifies a slot list to be used (Contentionless access) or the NIU/STB shall use contention or reserved access by following this algorithm:

When the NIU/STB must send more cells than what was assigned by the NRC, it can use contention access only if the number of cells to transmit is less than Maximum_contention_access_message_length (specified in the MAC Connect Message from the NRC). In that case, it must wait for the slot reception indicator before it is allowed to send other cells with the same VPI/VCI value, unless the slot reception indicators are lost in which case the ATM cells shall not be retransmitted (e.g. due to CRC error). The NIU/STB can send one request for reservation access if the number of cells is less than Maximum_reservation_access_message_length (specified in the MAC Connect Message from the NRC). If more cells must be transmitted, the NIU/STB must send multiple requests for reservation access. If the NIU/STB is forced to use reservation access, and it has not yet been assigned a Reservation_ID, then it shall wait for an assignment before transmitting.

- MAC messages:

MAC messages can be sent on contention access or reservation access. MAC messages sent upstream must be less than 40 bytes long. If the MAC information exceeds 40 bytes, it must be segmented into multiple 40 bytes independent MAC messages. DS MAC messages are restricted to less than or equal to 120 bytes. Ranging access can only be used for specific MAC messages.

The following Upstream Access Types are defined:

- **Contention Access**

`Contention Access` indicates that data is sent in the slots assigned to the contention access region in the upstream channel. It can be used either to send MAC messages or data. The VPI, VCI of the ATM cells are used to determine the connection, type and direction of the data of higher layers. Contention based access provides instant channel allocation for the NIU/STB. The Contention based technique is used for multiple subscribers that will have equal access to the channel. Since simultaneous transmissions will occur, a positive acknowledgment of reception by the NRC is sent in the reception indicator field of the OOB downstream channel. A collision will be assumed if an NIU/STB does not receive a positive acknowledgment.

- **Contentionless Access**

`Contentionless_Access` indicates that data is sent in slots assigned to the Contentionless based access region in the upstream channel. These slots are uniquely assigned to a connection by the NRC. Contentionless slots can be assigned with a slot list, or with a cyclic assignment. In both cases the Not_Persistent_Flag determines if the assignment persists or exists only for one cycle of the SL-ESF M-bit frame counter. Two scenarios exist for different cyclic assignments. Figure 7.8-20 illustrates both cases for the cyclic assignment for the non-persistent case. The persistent case would be equivalent with the assigned slots existing for consecutive ramps of the SL-ESF M-bit frame counter. The use of Frame_Length and Contentionless_Distance is not depicted.

 © ISO/IEC 1999 - All rights reserved

--`,,```,,,,````-`-`,,`,,`,`,,`---

Copyright International Organization for Standardization
Provided by IHS under license with ISO
No reproduction or networking permitted without license from IHS Not for Resale

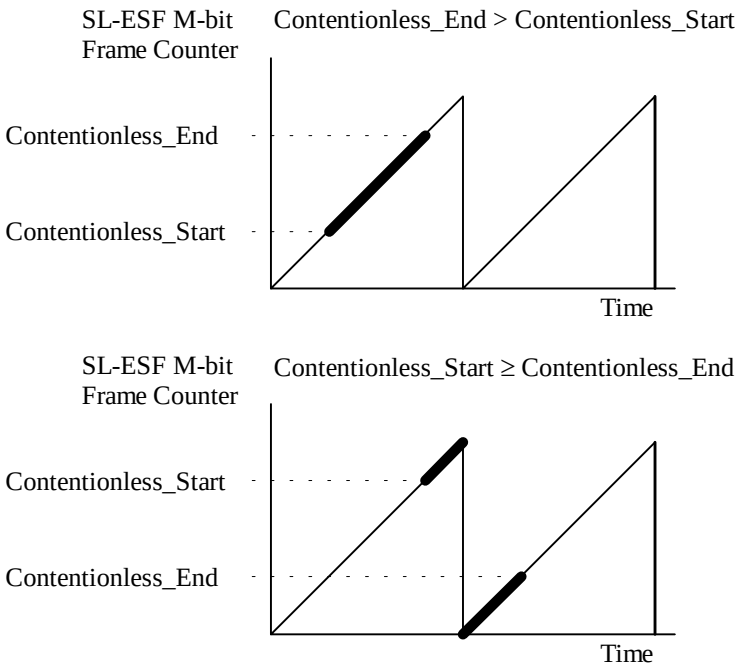

Figure 7.8-20 - Contentionless Cyclic Assignments

- **Reservation Access**
  `Reservation Access` implies that data is sent in the slots assigned to the reservation region in the upstream channel. These slots are uniquely assigned on a frame by frame basis to a connection by the NRC. This assignment is made at the request of the NIU/STB for a given connection.
- **Ranging Access**
  `Ranging Access` indicates that the data is sent in a slot preceded and followed by slots not used by other users. These slots allow users to adjust their clock depending on their distance to the NRC such that their slots fall within the correct allocated time. The Ranging Access area is either in the Contention Access region or in slots assigned to the reservation region in the upstream channel. The reservation slots are uniquely assigned on a frame by frame basis to the NIU/STB.

7.8.3.6.2 Connection Release

This section defines the MAC signaling requirements for connection release. Figure 7.8-21 below displays the signaling flow for releasing a connection.

1. Upon receiving the **<MAC> Release Message** from the NRC, the NIU/STB shall tear down the indicated upstream connections.
2. Upon tear down of the upstream connection, the NIU/STB shall send the **<MAC> Release Response Message** on the upstream frequency currently being used by the NIU/STB for MAC Messages.

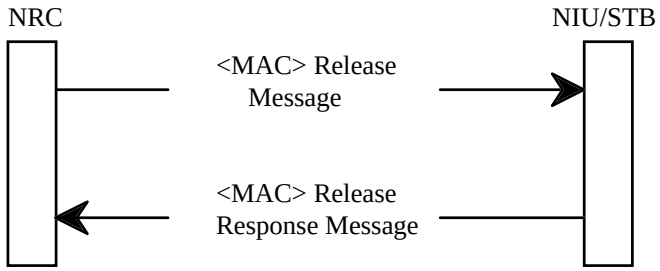

Figure 7.8-21 - Connection Release Signaling

Copyright International Organization for Standardization
Provided by IHS under license with ISO
No reproduction or networking permitted without license from IHS Not for Resale

7.8.3.7 MAC Link Management

The MAC Link Management tasks provide continuous monitoring and optimization of upstream resources. These functions include:

- Power and Timing Management
- TDMA Allocation Management
- Reservation Allocation Management
- Channel Error Management

7.8.3.7.1 Power and Timing Management

Power and Timing Management shall provide continuous monitoring of upstream transmission from the NIU/STB. The **<MAC> Ranging and Power Calibration Message** is used to maintain a NIU/STB within predefined thresholds of power and time.
The Upstream Burst Demodulator shall continuously monitor the upstream burst transmissions from an NIU/STB. Upon detection of an NIU/STB outside the predefined range, the NRC shall send the **<MAC> Ranging and Power Calibration Message** to the NIU/STB.
The NIU/STB US power accuracy shall be less than or equal to +/- 1.5 dB. The NIU/STB nominal power resolution shall be 0.5 dB.

7.8.3.7.2 TDMA Allocation Management

To ensure optimum assignment of TDMA resources, the NRC shall ensure the upstream allocation of TDMA resources for various connections remain intact when allocating resources to a new connection. However, in the event that reconfiguration is required to minimize fragmentation of resources, then the NRC shall dynamically reconfigure the upstream TDMA assignments to a NIU/STB or group of NIU/STBs. The **<MAC> Reprovision Message** is utilized to change previously established connection parameters.

7.8.3.7.3 Channel Error Management

During periods of connection inactivity, the NIU/STB shall enter an Idle Mode. Idle mode is characterized by periodic transmission by the NIU/STB of a **<MAC> Idle Message**. The Idle Mode transmission shall occur at a periodic rate sufficient for the NRC to establish Packet Error Rate statistics. The Idle Message shall be sent only when the NIU/STB has at least one connection, after the <MAC> Connect Confirm Message is received.

7.8.3.8 MAC messages in the mini slots

The MAC messages may also be transported in the minislot structure. The MAC message structure in the minislot is defined for the Reservation Request Message. Other MAC messages in the minislots are to be defined. The Start Field (SF) for the MAC messages is defined in the chapter for minislot framing structure. Error detection is performed using a 2 byte Reed Solomon code. The check digits are computed as in the ATM slot with the exception that only 2 digits are computed for $g(x)=(x+a^0)(x+a^1)$.

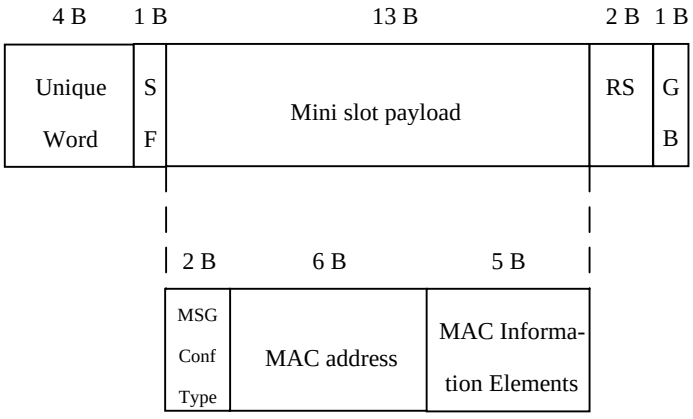

Figure 7.8-22. MAC messages in the minislots

 © ISO/IEC 1999 - All rights reserved

Copyright International Organization for Standardization
Provided by IHS under license with ISO
No reproduction or networking permitted without license from IHS
Not for Resale

7.8.3.8.1 Reservation Request Message

The Reservation Request Message has the same structure as in the case, it is transported in the upstream ATM slot. The MAC message structure for carrying the Reservation Request Message is shown in the figure 8.

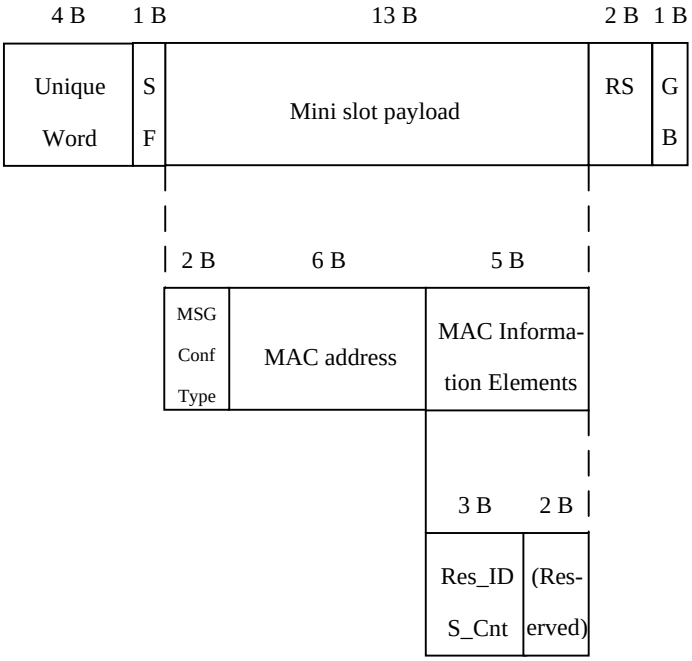

Figure 7.8-23. Reservation Request Message in the minislot MAC message structure

7.8.3.9 MAC Message Definitions

This section defines the MAC message set for DAVIC 1.3.1a.
For all MAC messages where the parameter length is smaller than the field, the parameter shall be right justified with leading bits set to 0.
All reserved fields in the MAC messages shall be set to 0.

7.8.3.9.1 Initialization, Provisioning and Sign On Messages

This section provides a detailed definition of the MAC messages for Initialization, Provisioning and Sign-On procedures.

7.8.3.9.1.1 <MAC> Provisioning Channel Message

The <MAC> PROVISIONING CHANNEL MESSAGE is sent by the NRC to direct the NIU/STB to the proper Out of Band frequency where provisioning is performed. The format of the message is shown below.

Copyright International Organization for Standardization
Provided by IHS under license with ISO
No reproduction or networking permitted without license from IHS Not for Resale

Provisioning_Channel_Message(){	Bits	Bytes	Bit Number / Description
Provisioning_Channel_Control_Field		**1**	
Reserved	6		7..2
Provider_Indentifier_Included	1		1:{no, yes}
Provisioning_Frequency_Included	1		0:{no, yes}
if (Provisioning_Channel_Control_Field &= Provisioning_Frequency_Included) {			
Provisioning_Frequency	**32**	**4**	
Downstream_Type	**8**	**1**	{enum}
}			
if (Provisioning_Channel_Control_Field &= Provider_Identifier_Included) {			
Provider_Identifier	**32**	**4**	
}			
}			

Provisioning Channel Control Field
`Provisioning_Channel_Control_Field` is used to specify the downstream frequency and/or the `Provider_Identifier` where the NIU/STB will be provisioned.
Provider Identifier Included
`Provider_Identifier_Included` is a Boolean when set, indicates that a `Provider_Identifier` is specified. **Provisioning Frequency Included**
`Provisioning_Frequency_Included` is a Boolean when set, indicates that a downstream frequency is specified that the NIU/STB should tune to begin the provisioning process. When cleared, indicates that the current downstream frequency is the provisioning frequency.
Provisioning Frequency
`Provisioning_Frequency` is a 32-bit unsigned integer representing the frequency in which NIU/STB provisioning occurs. The unit of measure is Hz.
Downstream Type
`Downstream_Type` is an 8-bit enumerated type indicating the modulation format for the downstream connection.

```
enum  Downstream_Type   {     QAM,
                              QPSK_1.544,
                              QPSK_3.088,
                              Reserved 3..255   };
```

Provider Identifier
`Provider_Identifier` is a 32-bit unsigned integer representing the Out of Band identification in which NIU/STB provisioning shall occur.

7.8.3.9.1.2 <MAC> Default Configuration Message

The <MAC> DEFAULT CONFIGURATION MESSAGE is sent by the NRC to the NIU/STB. The message provides default parameter and configuration information to the NIU/STB. The format of the message is shown below

 © ISO/IEC 1999 - All rights reserved

Copyright International Organization for Standardization
Provided by IHS under license with ISO
No reproduction or networking permitted without license from IHS Not for Resale

Default_Configuration_Message(){	Bits	Bytes	Bit Number / Description
Regs_Incr_Pwr_Retry_Count	**8**	**1**	
Service_Channel_Frequency	**32**	**4**	
Service_Channel_Control_Field		**1**	
MAC_Flag_Set	5		7..3
Service_Channel	3		2..0
Backup_Service_Channel_Frequency	**32**	**4**	
Backup_Service_Channel_Control_Field		**1**	
Backup_MAC_Flag_Set	5		7..3
Backup_Service_Channel	3		2..0
Service_Channel_Frame_Length	**16**	**2**	
Service_Channel_Last_Slot	**16**	**2**	
Max_Power_Level	**8**	**1**	
Min_Power_Level	**8**	**1**	
Upstream_Transmission_Rate	**3**	**1**	{enum}
Max_Backoff_Exponent	**8**	**1**	
Min_Backoff_Exponent	**8**	**1**	
Idle_Interval	**16**	**2**	
}			

Sign-On Increment Power Retry Count

`Regs_Incr_Pwr_Retry_Count` is an 8-bit unsigned integer representing the number of attempts the NIU/STB should try to enter the system at the same power level before switching to the Backup Service Channel if it's different than the Service Channel, or if currently on the Backup Service Channel switching back to the Service Channel and incrementing its power level by 0.5 dB.

Service Channel Frequency

`Service_Channel_Frequency` is a 32 bit unsigned integer representing the upstream frequency assigned to the service channel. The unit of measure is in Hz.

MAC_Flag_Set

`MAC_Flag_Set` is a 5 bit field indicating the MAC Flag set number assigned to the service channel (i.e. R1a, R1b and R1c represent MAC Flag set 1). It can take the values 1..16. Values 0 and 17..31 are invalid.

A downstream channel contains control information for each of its associated upstream channels. This information is contained within structures known as MAC Flags. A set of MAC Flags, represented by either 24 bits (denoted b0..b23) or by 3 bytes (denoted Rxa, Rxb and Rxc), are uniquely assigned to a given upstream channel. Refer to section 7.8.1.10 for a definition of the MAC Flags.

In the OOB downstream case, each SL-ESF frame structure contains eight sets of MAC Flags represented by Rxa, Rxb and Rxc, where x is replaced by the numbers 1..8. In the case of a 1.544 Mbit/s downstream bit rate, only one SL-ESF frame occurs during a 3 ms interval providing 8 sets of MAC Flags. In the case of a 3.088 Mbit/s downstream bit rate, two SL-ESF frames occur during a 3 ms interval, providing 16 sets of MAC Flags. The second set of MAC Flags (contained in the second SL-ESF) are denoted by Rxa, Rxb and Rxc, where x is replaced by the numbers 9 through 16.

In the IB downstream case, the MAC Flags are contained in the MAC Control Message Structure which can contain as many as 16 MAC Flag sets. The MAC Flags 1..8 are contained in the "MAC Flags" field and the MAC Flags 9..16 are contained in the "Extension Flags" field. Refer to section 7.7.14.1 for a description of the MAC Control Message Structure.

In case of a 3.088 Mbit/s upstream channel, two sets of MAC Flags are required. In this case, the MAC_Flag_Set parameter represents the first of two successively assigned MAC Flag sets.

Service Channel

`Service_Channel` is a 3-bit field which defines the channel assigned to the Service_Channel_Frequency. Although the function provided by this parameter is superseded in ISO/IEC 16500 by the MAC_Flag_Set, it is retained in order to identify the logical channel assigned to the NIU/STB.

Backup Service Channel Frequency

`Backup_Service_Channel_Frequency` is a 32 bit unsigned integer representing the upstream frequency assigned to the backup service channel. The backup service channel is used when entry on the primary service channel fails. The unit of measure is in Hz. If there is no Backup Service Channel, this parameter shall be equal to the Service Channel Frequency.

Copyright International Organization for Standardization
Provided by IHS under license with ISO
No reproduction or networking permitted without license from IHS Not for Resale

Backup MAC Flag Set
`Backup_MAC_Flag_Set` is an 5 bit field representing the MAC Flag set assigned to the backup service channel. The function of this field is the same as the MAC_Flag_Set above but with respect to the backup service channel. If there is no Backup Service Channel, this parameter shall be equal to the MAC Flag Set.
Backup Service Channel
`Backup_Service_Channel` is a 3-bit field which defines the channel assigned to the Backup Service_Channel_Frequency. The function of this field is the same as the Service_Channel above but with respect to the backup channel. If there is no Backup Service Channel, this parameter shall be equal to the Service Channel.
Service Channel Frame Length
`Service_Channel_Frame_Length` is a 16-bit unsigned integer representing the number of slots in the upstream Contentionless based Service Channel. The unit of measure is slots.
Service Channel Last Slot
`Service_Channel_Last_Slot` is a 16-bit unsigned integer representing the last slot in the Service Channel.
Maximum Power Level
`MAX_Power_Level` is a 8-bit unsigned integer representing the maximum power the NIU/STB shall be allowed to use to transmit upstream. The unit of measure is 0.5dBμV.
Minimum Power Level
`MIN_Power_Level` is an 8-bit unsigned integer representing the minimum power the NIU/STB shall be allowed to use to transmit upstream. The unit of measure is 0.5dBμV.
Upstream Transmission Rate
`Upstream_Transmission_Rate` is a 3-bit enumerated type that indicates the upstream transmission rate.

```
enum Upstream_Transmission_Rate     {     Upstream_256K,
                                          Upstream_1.544M,
                                          Upstream_3.088M
                                          Reserved 3..7     };
```

MIN_Backoff_Exponent
`MIN_Backoff_Exponent` is an 8-bit unsigned integer representing the minimum value of the back off exponent counter.
MAX_Backoff_Exponent
`MAX_Backoff_Exponent` is an 8-bit unsigned integer representing the maximum value of the back off exponent counter.
Idle_Interval
`Idle_Interval` is a 16-bit unsigned integer representing the predefined interval for the MAC Idle Messages. The unit of the measure is seconds. The value of zero indicates that no Idle Messages shall be sent.

7.8.3.9.1.3 <MAC> Sign-On Request Message

The <MAC> SIGN-ON REQUEST message is issued periodically by the NRC to allow a NIU/STB to indicate its presence in the network. The format of this subcommand is shown below.

Sign-On_Request_Message(){	Bits	Bytes	Bit Number / Description
Sign-On_Control_Field		**1**	
Reserved	7		7..1
Address_Filter_Params_Included	1		0:{no, yes}
Response_Collection_Time_Window	**16**	**2**	
if (Sign-On_Control_Field == Address_Filter_Params_Included) {			
Address_Position_Mask	**8**	**1**	
Address_Comparison_Value	**8**	**1**	
}			
}			

Sign-On Control Field
`Sign-On_Control_Field` specifies what parameters are included in the SIGN-ON REQUEST
Address Filter Parameters Included

 © ISO/IEC 1999 - All rights reserved

--`,,```,,,,````-`-`,,`,,`,`,,`---

Copyright International Organization for Standardization
Provided by IHS under license with ISO
No reproduction or networking permitted without license from IHS Not for Resale

`Address_Filter_Params_Included` is a Boolean, when set, indicates that the NIU/STB should respond to the SIGN-ON REQUEST only if its address matches the filter requirements specified in the message. When not set, any NIU/STB can respond to the SIGN-ON REQUEST.

Response Collection Time Window

`Response_Collection_Time_Window` is a 16-bit unsigned integer that specifies the duration of time the NIU/STB has to respond to the SIGN-ON REQUEST. The unit of measure is msec.

Address Position Mask

`Address_Position_Mask` is an 8-bit unsigned integer that indicates the bit positions in the NIU/STB MAC address that are used for address filtering comparison. This parameter represents the number of bits that the Address Comparison Value should be left shifted before the compare operation. It has a range from 0 to 40.

Address Comparison Value

`Address_Comparison_Value` is an 8-bit unsigned integer that specifies the value that the NIU/STB should use for MAC address comparison. These eight bits are compared against the 8 bits of the MAC address after shifting according to the Address Position Mask.

7.8.3.9.1.4 <MAC> Sign-On Response Message

The <MAC> Sign-On Response Message is sent by the NIU/STB in response to the <MAC> Sign-On Request Message issued by the NRC Entity.

Sign-On_Response_Message(){	Bits	Bytes	Bit Number / Description
NIU/STB_Status		**4**	
Reserved	29		31..3
Network_Address_Registered	1		2:{no, yes}
Default_Connection_Established	1		1:{no, yes}
Calibration_Operation_Complete	1		0:{no, yes}
NIU/STB_Error_Code		**2**	
Reserved	13		15..3
Connect_Confirm_Timeout	1		2:{no, yes}
Default_Connection_Timeout	1		1:{no, yes}
Range_Response_Timeout	1		0:{no, yes}
NIU/STB_Retry_Count	**8**	**1**	
NIU/STB_Capabilities	**32**	**4**	
Reserved	28		31..4
Minislots	1		3:{no, yes}
IB_ATM	1		2:{no, yes}
IB_MPEG	1		1:{no, yes}
OOB	1		0:{no, yes}
}			

NIU/STB Status

`NIU/STB_Status` is a 32-bit field that indicates the current state of the NIU/STB. It has the following subfields:

`Network_Address_Registered` indicates that the Network Interface Module has registered its NSAP Address with the Application Module. The NSAP Address is not currently used but remains reserved for this purpose.

`Default_Connection_Established` indicates that the Network Interface Module has been assigned Default Connection parameters.

`Calibration_Operation_Complete` indicates that the Network Interface Module has been successfully calibrated. on the current US frequency. This field shall be cleared when the NIU/STB is reset.

NIU/STB Error Code

`NIU/STB_Error_Code` is an 16-bit field that indicates the error condition within the NIU/STB. It has the following subfields:

`Connect_Confirm_Timeout`
`Default_Connection_Timeout`
`Range_Response_Timeout`

Retry Count

Copyright International Organization for Standardization
Provided by IHS under license with ISO
No reproduction or networking permitted without license from IHS Not for Resale

Retry_Count is a 8-bit unsigned integer that indicates the number of transmissions of the <MAC> Sign-On Response Message. This field is always included in the response to the <MAC> Sign-On Request Message. This field shall be initialized to zero whenever a Sign-On procedure is started, and this field shall increment by one each time the message is transmitted until the Sign-On procedure completes or the value reaches it's maximum value (255). In the case that this field reaches it's maximum value, it shall remain at the maximum value for the remainder of the current Sign-On procedure.

NIU/STB Capabilities

Minislots is an 1-bit field that indicates that the NIU/STB is capable of utilizing minislots.

IB_ATM is an 1-bit field that indicates that the NIU/STB is capable of utilizing IB ATM signaling.

IB_MPEG is an 1-bit field that indicates that the NIU/STB is capable of utilizing IB MPEG signaling.

OOB is an 1-bit field that indicates that the NIU/STB is capable of utilizing OOB ATM signaling.

7.8.3.9.1.5 <MAC> Ranging and Power Calibration Message

The <MAC> RANGING AND POWER CALIBRATION MESSAGE is sent by the NRC to the NIU/STB to adjust the power level or time offset the NIU/STB is using for upstream transmission. The format of this message is shown below.

Ranging_and_Power_ Calibration_Message(){	Bits	Bytes	Bit Number / Description
Range_Power_Control_Field		**1**	
Reserved	5		7..3
Ranging_Slot_Included	1		2:{no, yes}
Time_Adjustment_Included	1		1:{no, yes}
Power_Adjustment_Included	1		0:{no, yes}
if (Range_Power_Control_Field &= Time_Adjustment_Included) {			
Time_Offset_Value	**16**	**2**	
}			
if (Range_Power_Control_Field &= Power_Adjustment_Included) {			
Power_Control_Setting	**8**	**1**	
}			
if (Range_Power_Control_Field &= Ranging_Slot_Included) {			
Ranging_Slot_Number_Field	**16**	**2**	
Reserved	3		15..13
Ranging_Slot_Number	13		12..0
}			
}			

Range and Power Control Field

Range_Power_Control_Field specifies which Range and Power Control Parameters are included in the message.

Time Adjustment Included

Time_Adjustment_Included is a Boolean when set, indicates that a relative Time Offset Value is included that the NIU/STB should use to adjust its upstream transmission.

Power Adjust Included

Power_Adjust_Included is a Boolean when set, indicates that a relative Power Control Setting is included in the message

Ranging Slot Included

Ranging_Slot_Included is a Boolean when set, indicates the calibration slot is included in the message.

Time Offset Value

Time_Offset_Value is a 16-bit signed integer representing a relative offset of the upstream transmission timing. A negative value indicates an adjustment forward in time. A positive value indicates an adjustment back in time. The unit of measure is 100 nsec.

Power Control Setting

Power_Control_Setting is an 8-bit signed integer to be used to set the new upstream power level of the NIU/STB. A positive value represents an increase of the output power level.

 © ISO/IEC 1999 - All rights reserved

--`,,```,,,,````-`-`,,`,,`,`,,`---

Copyright International Organization for Standardization
Provided by IHS under license with ISO
No reproduction or networking permitted without license from IHS Not for Resale

new output_power_level = current output_power_level + power_control_setting*0.5 dB

Ranging Slot Number Field

`Ranging_Slot_Number_Field` is a 16-bit field of which the 13 LSBs represent the ATM slot number assigned for ranging the NIU/STB. It shall be assigned by the NRC in the reservation area. If necessary, the NRC shall assure that an unassigned slot precedes and follows the ranging slot. Minislots are not used for ranging.

7.8.3.9.1.6 <MAC> Ranging and Power Calibration Response Message

The <MAC> RANGING AND POWER CALIBRATION RESPONSE Message is sent by the NIU/STB to the NRC in response to the <MAC> RANGING AND POWER CALIBRATION MESSAGE. The format of the message is shown below.

Ranging_and_Power_Calibration _Response_Message(){	Bits	Bytes	Bit Number / Description
Power_Control_Setting	**8**	**1**	
}			

Power Control Setting

`Power_Control_Setting` is an 8-bit unsigned integer representing the actual power used by the NIU/STB for upstream transmission. The unit of measure is 0.5 dBμV.

7.8.3.9.1.7 <MAC> Initialization Complete Message

The <MAC> INITIALIZATION COMPLETE Message is sent by the NRC to the NIU/STB to indicate the end of the MAC Sign-On and Provisioning procedure. The STB/NIU shall be disabled after receiving a non-zero Completion_Status_Field value.

Initialization_Complete_Message(){	Bits	Bytes	Bit Number / Description
Completion_Status_Field		**1**	
Reserved	4		7..4
Invalid_STB/NIU	1		3:{no, yes}
Timing_Ranging_Error	1		2:{no, yes}
Power_Ranging_Error	1		1:{no, yes}
Transmitter_Error	1		0:{no, yes}
}			

Completion_Status_Field

`Completion_Status_Field` is an 8-bit field that indicates errors in the initialization phase. It has the following subfields:

`Invalid_STB/NIU` is a boolean that (when set to 1) indicates that the STB/NIU is invalid.

`Timing_Ranging_Error` is a boolean that (when set to 1) indicates that the ranging has not succeeded.

`Power_Ranging_Error` is a boolean that (when set to 1)indicates that the power ranging has not succeeded.

`Transmitter_Error` is a boolean that (when set to 1) indicates a transmitter error.

7.8.3.9.2 Connection Management Messages

This section defines the MAC messages for connection establishment and release.

Copyright International Organization for Standardization
Provided by IHS under license with ISO
No reproduction or networking permitted without license from IHS Not for Resale

7.8.3.9.2.1 <MAC> Connect Message

Connect_Message (){	Bits	Bytes	Bit Number / Description
Connection_ID	**32**	**4**	
Session_Number	**32**	**4**	
Resource_Number	**16**	**2**	
Connection_Control_Field		**1**	
DS_ATM_CBD_Included	1		7: {no, yes}
DS_MPEG_CBD_Included	1		6:{no, yes}
US_ATM_CBD_Included	1		5:{no, yes}
Upstream_Channel_Number	3		4..2
Slot_List_Included	1		1:{no, yes}
Cyclic_Assignment	1		0:{no, yes}
Frame_Control_Field	**16**	**2**	
Not_Persistent_Flag	1		15:{no, yes}
Frame_Length	15		14..0
Maximum_Contention_Access_ Message_Length	**8**	**1**	
Maximum_Reservation_Access_ Message_Length	**8**	**1**	
if (Connection_Control_Field &= DS_ATM_CBD_Included) {			
Downstream_ATM_CBD()	**64**	**8**	
}			
if (Connection_Control_Field &= DS_MPEG_CBD_Included) {			
Downstream_MPEG_CBD()	**48**	**6**	
}			
if (Connection_Control_Field &= US_ATM_CBD_Included) {			
Upstream_ATM_CBD()	**64**	**8**	
}			
if (Connection_Control_Field &= Slot_List_Included) {			
Number_Slots_Defined	**8**	**1**	
for(i=0; i<Number_Slots_Defined; i++){			
Slot_Number_Field	**16**	**2**	
Minislot_Indicator	3		15..13
Slot_Number	13		12..0
}			
}			
if (Connection_Control_Field &= Cyclic_Assignment) {			
Contentionless_Start_Field	**16**	**2**	
Minislot_Indicator	3		15..13
Contentionless_Start	13		12..0
Contentionless_Dist	**16**	**2**	
Contentionless_End[1]	**16**	**2**	
}			
}			

Connection ID
Connection_ID is a 32-bit unsigned integer representing a connection Identifier for the NIU/STB Dynamic Connection.

[1] This definition was changed from that in earlier DAVIC releases.

 © ISO/IEC 1999 - All rights reserved

Copyright International Organization for Standardization
Provided by IHS under license with ISO
No reproduction or networking permitted without license from IHS Not for Resale

Session Number
`Session_Number` is a 32-bit unsigned integer representing the Session that the connection parameters are associated. This parameter is not currently used but remains reserved for this purpose.
Resource Number
`Resource_Number` is a 16-bit unsigned integer providing a unique number to the resource defined in the message. This parameter is not currently used but remains reserved for this purpose.
Connection Control Field
`DS_ATM_CBD_Included` is a boolean that indicates that the Downstream ATM Descriptor is included in the message.
`DS_MPEG_CBD_Included` is a boolean that indicates that the Downstream MPEG Descriptor is included in the message.
`US_ATM_CBD_Included` is a boolean that indicates that the Upstream ATM Descriptor is included in the message.
`Upstream_Channel_Number` is a 3-bit unsigned integer that provides an identifier for the upstream channel.
`Slot_List_Included` is a boolean that indicates that the Slot List is included in the message.
`Cyclic_Assignment` is a boolean that indicates Cyclic Assignment.
Frame Control Field
`Not_Persistent_Flag` is a 1 bit field that indicates whether the contentionless connection assignment grants slots for consecutive cycles of the SL-ESF M-bit frame counter. If the value is 0, then the assignment is persistent.
`Frame_Length` is a 15 bit unsigned number that represents the number of successive slots in the contentionless access region that is associated with each contentionless slot assignment. In the slot_list method of allocating slots it represents the number of successive slots associated with each element in the list. In the cyclic method of allocating slots it represents the number of successive slots associated with the Contentionless_Start_Slot and those which are multiples of Contentionless_Distance from the Contentionless_Start_Slot. If the Minislot_Indicator in the Slot_Number_Field or in the Contentionless_Start field, has a value 1..3, the Frame_Length is interpreted in minislots. If it has a value zero it is interpreted in ATM slots.

Maximum Contention Access Message Length
`Maximum_Contention_Access_Message_Length` is an 8 bit unsigned integer representing the maximum length of a message in ATM sized cells that may be transmitted using contention access. Any message greater than this shall use reservation access.
Maximum Reservation Access Message Length
`Maximum_Reservation_Access_Message_Length` is an 8 bit unsigned integer representing the maximum length of a message in ATM sized cells that may be transmitted using a single reservation access. Any message greater than this shall be transmitted by making multiple reservation requests.
Downstream ATM Connection Block Descriptor

`Downstream_ATM_CBD(){`	Bits	Bytes	Bit Number / Description
`Downstream_Frequency`	**32**	**4**	
`Downstream_VPI`	**8**	**1**	
`Downstream_VCI`	**16**	**2**	
`Downstream_Type`	**8**	**1**	{enum}
`}`			

`Downstream_Frequency` is a 32-bit unsigned integer representing the Frequency where the connection resides. The unit of measure is in Hz.
`Downstream_VPI` is an 8-bit unsigned integer representing the ATM Virtual Path Identifier that is used for downstream transmission over the Dynamic Connection.
`Downstream_VCI` is an 16-bit unsigned integer representing the ATM Virtual Identifier that is used for downstream transmission over the Dynamic Connection.
`Downstream_Type` is an 8-bit enumerated type indicating the modulation format for the downstream connection.

Copyright International Organization for Standardization
Provided by IHS under license with ISO
No reproduction or networking permitted without license from IHS Not for Resale

```
enum Downstream_Type    {     QAM,
                              QPSK_1.544,
                              QPSK_3.088,
                              Reserved 3..255   };
```

Downstream MPEG Connection Block Descriptor

Downstream_CBD_MPEG(){	Bits	Bytes	Bit Number / Description
Downstream_Frequency	**32**	**4**	
Program Number	**16**	**2**	
}			

Downstream_Frequency is a 32-bit unsigned integer representing the Frequency where the connection resides. The unit of measure is in Hz.
Program_Number is a 16-bit unsigned integer uniquely referencing the MPEG-2 TS PID of the downstream connection assignment.

Upstream ATM Connection Block Descriptor

Upstream_ATM_CBD () {	Bits	Bytes	Bit Number / Description
Upstream_Frequency	**32**	**4**	
Upstream_VPI	**8**	**1**	
Upstream_VCI	**16**	**2**	
Upstream_Parameters		**1**	
MAC_Flag_Set	5		7..3
Upstream_Rate	3		2..0:{enum}
}			

Upstream_Frequency is a 32-bit unsigned integer representing the channel on assigned to the connection. The unit of measure is in Hz.
Upstream_VPI is an 8-bit unsigned integer representing the ATM Virtual Path Identifier that is used for upstream transmission over the Dynamic Connection.
Upstream_VCI is an 16-bit unsigned integer representing the ATM Virtual Identifier that is used for upstream transmission over the Dynamic Connection.
MAC_Flag_Set is an 5 bit field representing the MAC Flag set assigned to the connection. In the OOB downstream SL-ESF frame payload structure, each set of three bytes, denoted by Rxa- Rxc, comprise a flag set. These eight flag sets are assigned the numbers 0..7. In the IB downstream timing, the 16 flag sets are assigned the numbers 0..15. In the case of a 3.088 Mbit/s upstream channel, two successive flag sets are required to define a 3ms period. In this case, this parameter represents the first of two successively assigned flag sets. In the case of a 3.088Mbit/s OOB downstream, two successive SL-ESF frames define the 3ms interval. The Rxa-Rxc bytes of the first frame represent flag sets 0..7 while the Rxa-Rxc bytes of the second frame represent flag sets 8..15.

```
enum Upstream_Rate      {     Upstream_256K,
                              Upstream_1.544M,
                              Upstream_3.088M,
                              Reserved 3..7     };
```

Number of Slots Defined
Number_Slots_Defined is an 8-bit unsigned integer that represents the number of slot assignments contained in the message. The unit of measure is slots.
Slot Number_Field
Minislot_Indicator is a 3-bit enum type that indicates if the slot is an ATM slot or a minislot and in the case of the minislot, it indicates which minislot.

 © ISO/IEC 1999 - All rights reserved

--`,,```,,,,````-`-`,,`,,`,`,,`---

Copyright International Organization for Standardization
Provided by IHS under license with ISO
No reproduction or networking permitted without license from IHS Not for Resale

```
Enum Minislot_Indicator {     ATM_Slot,
                              1st minislot,
                              2nd minislot,
                              3rd minislot,
                              Reserved 4..7     };
```

`Slot_Number` is a 16-bit unsigned integer that represents the Contentionless based Slot Number assigned to the NIU/STB.

Contentionless Start Field

`Minislot_Indicator` is a 3-bit enum type that indicates if the slot is an ATM slot or a minislot and in the case of the minislot, it indicates which minislot. `Contentionless_Start` is a 13 bit unsigned integer that represents the starting upstream slot within the contentionless access region that is assigned to the NIU/STB. The NIU/STB may use the next Frame_Length slots of the contentionless access regions. If the Minislot_Indicator has a value 1..3, Contentionless_Start represents the upstream slot position in which the allocated minislot is located.

Contentionless Distance

`Contentionless_Distance` is 16 bit field of which the 13 LSBs represent the distance in slots between additional slots assigned to the NIU/STB. If the Minislot_Indicator has a value 1..3, Contentionless_Distance refers to minislots, if the Minislot_Indicator has a value zero, the Contentionless_Distance refers to ATM slots. The NIU/STB is assigned all slots that are a multiple of Contentionless_Distance from the Contentionless_Start_Slot. The NIU/STB may use the next Frame_Length slots of the contentionless access regions from each of these additional slots.

Contentionless End

`Contentionless_End` is a 16 bit field of which the 13 LSBs indicate the last slot that may be used for contentionless access. If Contentionless_End > Contentionless_Start, then the slots assigned to the NIU/STB, as determined by using Contentionless_Start, Contentionless_Distance, and Frame_Length, cannot exceed Contentionless_End. If Contentionless_End < Contentionless_Start, then the slots assigned to the NIU/STB, as determined by using Contentionless_Start, Contentionless_Distance, and Frame_Length, must not lie in the region > Contentionless_End and < Contentionless_Start. If Contentionless_Start = Contentionless_End and the assignment is persistent, then the slots assigned to the NIU/STB, as determined by using Contentionless_Start, Contentionless_Distance, and Frame_Length will be equivalent to the case where Contentionless_End is the slot before Contentionless_Start. In the case of minislots, the Contentionless_End defines the third minislot in the upstream slot position.

7.8.3.9.2.2 <MAC> Connect Response Message

The <MAC> CONNECT RESPONSE MESSAGE is sent to the NRC from the NIU/STB in response to the <MAC> CONNECT MESSAGE. The message shall be transmitted on the upstream frequency specified in the <MAC> CONNECT MESSAGE. If the US frequency is different than the current US frequency, then the procedure described in Section 7.8.3.5.2 shall be used before the <MAC> Connect Response Message is sent.

`Connect_Response_Message(){`	Bits	Bytes	Bit Number / Description
`Connection_ID`	**32**	**4**	
`}`			

Connection ID

`Connection_ID` is a 32-bit unsigned integer representing a global connection Identifier for the NIU/STB Dynamic Connection.

7.8.3.9.2.3 <MAC> Connect Confirm Message

The <MAC> Connect Confirm message is sent from the NRC to the NIU/STB.

`Connect_Confirm_Message(){`	Bits	Bytes	Bit Number / Description
`Connection_ID`	**32**	**4**	
`}`			

Copyright International Organization for Standardization
Provided by IHS under license with ISO
No reproduction or networking permitted without license from IHS Not for Resale

Connection ID
`Connection_ID` is a 32-bit unsigned integer representing a global connection Identifier for the NIU/STB Dynamic Connection.

7.8.3.9.2.4 <MAC> Reservation Request Message

`Reservation_Request_Message (){`	Bits	Bytes	Bit Number / Description
`Reservation_ID` **`Reservation_Request_Slot_Count`** `}`	**16** **8**	**2** **1**	

Reservation_ID
`Reservation_ID` is a 16 bit unsigned number representing a locally assigned identifier for the connection. This is used as a short identifier by the NIU/STB to identify the appropriate Reservation_Grant_Messages.
Reservation_Request_Slot_Count
`Reservation_Request_Slot_Count` is an 8 bit unsigned number representing the number of slots requested by the NIU/STB. This is the number of slots that will be allocated in the reservation region of the upstream channel. The NRC will respond with the Reservation_Acknowledge_Message granting the request.

7.8.3.9.2.5 <MAC> Reservation Grant Message

The <MAC> RESERVATION GRANT MESSAGE is used to indicate to the NIU/STB which slots have been allocated in response to the Reservation_Request_Message. The NIU/STB identifies its entry in the Reservation_Grant_Message by comparing the Reservation_ID assigned to it by the Reservation_ID_Assignment_Message and the entries in the Reservation_Grant_Message.
The format of the message is given below.

 © ISO/IEC 1999 - All rights reserved

Copyright International Organization for Standardization
Provided by IHS under license with ISO
No reproduction or networking permitted without license from IHS Not for Resale

Reservation_Grant_Message (){	Bits	Bytes	Bit Number / Description
Reference_Slot	**16**	**2**	uimsbf
Number_Grants	**8**	**1**	uimsbf
for (i=1;i<=Number_Grants;i++) {			
Reservation_ID	**16**	**2**	uimsbf
		2	uimsbf
Grant_Slot_Count	4		15..12
Remaining_Slot_Count	5		11..7
Grant_Control	2		6..5
Grant_Slot_Offset	5		4..0
}			
Number_of_US_Channels	**8**	**1**	
for (i=0;i<Number_of_US_Channels;i++)			
{			
Minislot_Control_Field		**1**	
Upstream_Channel_Number	3		7..5
MS_Feedback_Included	1		4:{no, yes}
MS_Allocation_Included	1		3:{no, yes}
Reserved	3		2..0
if (MS_FeedbackIncluded ||			
MS_Allocation_Included) {			
MS_Reference_Field	**16**	**2**	
}			
if (MS_Feedback_Included) {			
Number_of_Feedbacks	**8**	**1**	
for (i=0;			
i<Number_of_Feedbacks; i++)			
{			
Feedback_Offset	**8**	**1**	
Feedback_Collision_Number_1	**8**	**1**	
Feedback_Collision_Number_2	**8**	**1**	
Feedback_Collision_Number_3	**8**	**1**	
}			
}			
if (MS_Allocation_Included) {			
Entry_Field		**2**	
Stack_Entry	1		15
Reserved	3		14..12
Entry_Spreading	12		11..0
Number_of_Allocations	**8**	**1**	
for (i=0;			
i<Number_of_Allocations; i++)			
{			
Allocation_Offset	**8**	**1**	
Allocation_Collision_Number	**8**	**1**	
}			
}			
}			

Reference_slot

`Reference_slot` is an 16 bit unsigned number indicating the reference point for the remaining parameters of this message. This represents a physical slot of the upstream channel. Since the up-stream and down stream slots are not aligned, the NRC shall send this message in a downstream slot such that it is received by the NIU/STB before the Reference_Slot exists on the upstream channel.

Number_grants

`Number_Grants` is an 8 bit unsigned number representing the number of grants contained within this message.

Reservation_ID

`Reservation_ID` is a 16 bit unsigned number representing a locally assigned identifier for the connection. This is used as a short identifier by the NIU/STB to identify the appropriate Reservation_Grant messages.

Copyright International Organization for Standardization
Provided by IHS under license with ISO
No reproduction or networking permitted without license from IHS
Not for Resale

Grant_Slot_Count
Grant_Slot_Count is an 4 bit unsigned number representing the number of sequential slots currently granted for the upstream burst. Upon receipt of this message the NIU/STB is assigned Grant_Slot_Count sequential slots in the reservation access region of the upstream channel starting at the position indicated by the Reference_Slot and Grant_Slot_Offset values. A value of zero indicates that no slots are being granted. This would typically be the case in a response to a Reservation_Status_Request_Message
Remaining_Slot_Count
Remaining_Slot_Count is a 5 bit unsigned integer representing the remaining slots to be granted by the NRC with subsequent grant messages. A value of 0x1f indicates that 31 or more slots will be made available in the future. A value of 0x0 indicates that no additional slots will be granted in the future and that the slots granted in this message represent the only remaining slots available for the connection. The NIU/STB should monitor this count to determine if sufficient slots remain to satisfy current needs. Should additional slots be required because of lost grant messages or additional demand, additional slots should be requested using the Reservation_Request message. Additional Reservation_Request_Messages shall be sent only when the Remaining_Slot_Count is less than 15. To minimize contention on the upstream channel, the Reservation_Request_Message may be sent in one of the slots granted by the Reservation_Grant_Message.
Grant_Control
Grant_Control is a 2 bit unsigned number coded as 0 (reserved for future use).
Grant_Slot_Offset
Grant_Slot_Offset is a 5 bit unsigned integer representing the starting slot to be used for the upstream burst. This number is added to the Reference_Slot to determine the actual physical slot. Upon receipt of this message the NIU/STB is assigned Grant_Slot_Count sequential slots in the reservation access region of the upstream channel.
Number_of_US_Channels
Number_of_Channels is a 8-bit unsigned integer representing the number of Upstream channels in this message.
Minislot_Control_Field
Upstream_Channel_Number is a 3-bit unsigned integer representing the number of upstream channel controlled by this downstream channel in this message.
MS_Feedback_Included is a boolean that indicates that Minislot Feedback Section is included in the message.
MS_Allocation_Included is a boolean that indicates that Minislot Allocation Section is included in the message.
Minislot_Reference_Field
Minislot_Reference_Field is a 16-bit field of which the 13 LSBs represent the reference ATM slot number.
Number_of_Feedbacks
Number_of_Feedbacks is a 8-bit unsigned integer representing the number of three minislot feedback groups in this message.
Feedback_Offset
Feedback_Offset is a 8-bit unsigned integer representing the offset of the group of three minislots in ATM slots.
Feedback_Collision_Number_1
Feedback_Collision_Number_1 is a 8-bit unsigned integer representing the first minislot collision identification in the group of three minislots. The values 0xFF and 0xFE represent for idle and successful transmission, respectively.
Feedback_Collision_Number_2
Feedback_Collision_Number_2 is a 8-bit unsigned integer representing the second minislot collision identification in the group of three minislots. The values 0xFF and 0xFE represent for idle and successful transmission, respectively.
Feedback_Collision_Number_3
Feedback_Collision_Number_3 is a 8-bit unsigned integer representing the third minislot collision identification in the group of three minislots. The values 0xFF and 0xFE represent for idle and successful transmission, respectively.
Entry_Field
Stack_Entry is a boolean which when set allows the NIU to send the contention based minislot in any of the contention based minislots identified by the NRC. When set the splitting algorithm is carried out in the stack mode, when not set the splitting algorithm is carried out in the tree mode.
Entry_Spreading is a 14-bit unsigned integer representing the probability that the NIU will contend for access for NIU entering the process with a Allocation_Collision_Number=0. The NIU creates a random number

 © ISO/IEC 1999 - All rights reserved

Copyright International Organization for Standardization
Provided by IHS under license with ISO
No reproduction or networking permitted without license from IHS Not for Resale

between 0 and Entry_Spreading. If this number falls within the Allocation_Collision_Number=0, then the station contends for access in that minislot, otherwise it will create a new random number between 0 and Entry_Spreading.

Number_of_Allocations

`Number_of_Allocations` is a 8-bit unsigned integer representing the number of contention resolution allocations in this message.

Allocation_Offset

`Allocation_Offset` is a 8-bit unsigned integer representing the offset of the group of three minislots in ATM slots.

Allocation_Collision_Number

`Allocation_Collision_Number_1` is a 8-bit unsigned integer representing the group of three minislots in which the NIUs having the Collision_Number are allowed to transmit.

7.8.3.9.2.6 <MAC> Reservation ID Assignment Message

The <MAC> Reservation ID Assignment Message is used to assign the NIU/STB a Reservation_ID. The NIU/STB identifies its entry in the Reservation_Grant_Message by comparing the Reservation_ID assigned to it by the Reservation_ID_Assignment_Message and the entries in the Reservation_Grant_Message.
The format of the message is given below.

`Reservation_ID_Assignment_ Message (){`	Bits	Bytes	Bit Number / Description
`Connection_ID`	**32**	**4**	
`Reservation_ID`	**16**	**2**	
`Grant_Protocol_Timeout`	**16**	**2**	
`}`			

Connection ID

`Connection_ID` is a 32-bit unsigned integer representing a global connection identifier for the NIU/STB Dynamic Connection.

Reservation_ID

`Reservation_ID` is a 16 bit unsigned number representing a locally assigned identifier for the connection. This is used as a short identifier by the NIU/STB to identify the appropriate Reservation_Grant_Messages.

Grant_Protocol_Timeout

`Grant_Protocol_Timeout` is a 16 bit unsigned number representing the time in milliseconds that the NIU/STB should wait before verifying the status of pending grants. This parameter specifies the time that the NIU/STB should wait after sending the Reservation_Request Message or after receiving the last Reservation_Grant_Message, with an entry addressed to the NIU/STB containing a nonzero Remaining_Slot_Count, before initiating a reservation status request. If the NIU/STB has pending grants and the time-out occurs, it should send the Reservation_Status_Request_Message to the NRC. The NRC will respond with the Reservation_Grant_Message (probably without granting any slots) to inform the NIU/STB of any remaining slots left to be granted. This allows the NIU/STB to correct any problems should they exist such as issuing an additional request for slots or waiting patiently for additional grants.

7.8.3.9.2.7 <MAC> Reservation ID Response Message

The <MAC> Reservation ID Response Message is used to acknowledge the receipt of the <MAC> Reservation_ID_Assignment message.
The format of the message is given below.

`Reservation_ID_Response_Message (){`	Bits	Bytes	Bit Number / Description
`Connection_ID`	**32**	**4**	
`Reservation_ID`	**16**	**2**	
`}`			

Connection ID

`Connection_ID` is a 32-bit unsigned integer representing a global connection identifier for the NIU/STB Dynamic Connection.

Copyright International Organization for Standardization
Provided by IHS under license with ISO
No reproduction or networking permitted without license from IHS Not for Resale

Reservation_ID
`Reservation_ID` is a 16 bit unsigned number representing a locally assigned identifier for the connection. This is used as a short identifier by the NIU/STB to identify the appropriate Reservation_Grant_Messages.

7.8.3.9.2.8 <MAC> Reservation Status Request

The <MAC> RESERVATION STATUS REQUEST Message is used to determine the status of the outstanding grants to be assigned by the NRC. This message is only sent after the Grant protocol time-out is exceeded. The NRC will respond with the Reservation_Grant_Message (possibly without granting any slots) to inform the NIU/STB of any remaining slots left to be granted. This allows the NIU/STB to correct any problems should they exist such as issuing an additional request for slots or waiting patiently for additional grants.
The format of the message is given below.

`Reservation_Status_Request_Message (){`	Bits	Bytes	Bit Number / Description
`Reservation_ID`	**16**	**2**	
`Remaining_Request_Slot_Count`	**8**	**1**	
`}`			

Reservation_ID
`Reservation_ID` is a 16 bit unsigned number representing a locally assigned identifier for the connection. This is used as a short identifier by the NIU/STB to identify the appropriate Reservation_Grant_Messages.
Remaining_Request_Slot_Count
`Remaining_Request_Slot_Count` is an 8 bit unsigned number representing the number of slots that the NIU/STB is expecting to be granted.

7.8.3.9.2.9 <MAC> Reservation Acknowledge Message

This message is replaced by the Reservation_Grant_Message for DAVIC 1.3.1a *compliant STBs.*
This message is used to indicate to the NIU/STB which slots have been allocated in response to the Reservation Request message. This message provides for two reservation acknowledges for each of the 8 associated upstream channels.
The NIU/STB identifies its entry in the Reservation_Acknowledge_Message by knowing the slot in which its Reservation_Request_Message was sent and accepted along with its assigned upstream channel number represented by (i). When a match is found between the Reservation_Request slot and a Ch(i)_Request_Slot, the Ch(i)_Grant_Slot is the starting slot for the burst transmission. The NIU/STB may use the next Reservation_Request_Slot_Count slots in the reservation regions of the upstream channel.
The format of the message is given below.

`Reservation_Acknowledge_Message(){`	Bits	Bytes	Bit Number / Description
`Reference_Slot`	**16**	**2**	
`for (i=1;i<=8;i++) {`			
`Ch(i)_Request_Slot`	**8**	**1**	
`Ch(i)_Grant_Slot`	**8**	**1**	
`Ch(i)_Request_Slot`	**8**	**1**	
`Ch(i)_Grant_Slot`	**8**	**1**	
`}`			
`}`			

Reference Slot
`Reference_Slot` is an 16 bit unsigned number indicating the reference point for the remaining parameters of this message. This represents a physical slot of the upstream channel. Since the up-stream and down stream slots are not aligned, the NRC shall send this message in a downstream slot such that it is received by the NIU/STB before the Reference_slot exists on the upstream channel.
Ch(i) Request Slot
`Ch(i)_Request_Slot` is an 8 bit unsigned number representing the slot in which the Reservation Request Message was received by the NRC. This number is subtracted from the Reference_slot to determine the actual physical slot. A value of 0x00 indicates that no request is being acknowledged. If a Reservation_Acknowledge_Message is not received within 250 slots of the Reservation_Request_Message, the

 © ISO/IEC 1999 - All rights reserved

Copyright International Organization for Standardization
Provided by IHS under license with ISO
No reproduction or networking permitted without license from IHS Not for Resale

unacknowledged Reservation_Request_Message shall be invalidated by the NIU/STB and a new one initiated if necessary.

Ch(i) Grant Slot

`Ch(i)_Grant_Slot` is an 8 bit unsigned number representing the starting slot to be used for the upstream burst. This number is added to the Reservation_Slot to determine the actual physical slot Upon receipt of this message the NIU/STB is assigned Reservation_Request_Slot_Count sequential slots in the reservation access region of the upstream channel starting at the slot designated by the Ch(i)_Grant_Slot. The Ch(i)_Grant_Slot value of 0x00 indicates that no slots are being granted.

7.8.3.9.2.10 <MAC> Release Message

The **<MAC> Release Message** is sent from the NRC to the NIU/STB to terminate a previously established connection.

Release_Message(){	Bits	Bytes	Bit Number / Description
Number_of_Connections	**8**	**1**	
for(i=0;i<Number_of_Connections;i++){			
Connection_ID	**32**	**4**	
}			
}			

Number_of_Connections

`Number_of_Connections` is an 8-bit unsigned integer representing the number of Connection Identifiers listed in the <MAC> Release Message.

Connection ID

`Connection_ID` is a 32-bit unsigned integer representing a global Connection Identifier for the NIU/STB Dynamic Connection.

7.8.3.9.2.11 <MAC> Release Response Message

The <MAC> RELEASE RESPONSE MESSAGE is sent by the NIU/STB to the NRC to acknowledge the release of a connection. The format of the message is shown in the Figure below.

Release_Response_Message (){	Bits	Bytes	Bit Number / Description
Connection_ID	**32**	**4**	
}			

Connection ID

`Connection_ID` is a 32-bit unsigned integer representing the global connection Identifier used by the NIU/STB for this connection.

7.8.3.9.2.12 <MAC> Idle Message

The **<MAC> Idle Message** is sent by the NIU/STB within the NIU/STB to the NRC at predefined intervals when upstream connection buffers are empty. The predefined interval is transmitted in the Default Configuration Message.

Idle_Message(){	Bits	Bytes	Bit Number / Description
Idle_Sequence_Count	**8**	**1**	
Power_Control_Setting	**8**	**1**	
}			

Idle Sequence Count

`Idle_Sequence_Count` is a 8-bit unsigned integer representing the count of <MAC> IDLE MESSAGES transmitted while the NIU/STB is Idle. This count shall increment by one every time the message is sent and this count shall count modulo 256.

Power Control Setting

--`,,```,,,,````-`-`,,`,,`,`,,`---
Copyright International Organization for Standardization
Provided by IHS under license with ISO
No reproduction or networking permitted without license from IHS Not for Resale

`Power_Control_Setting` is a 8-bit unsigned integer representing the actual power used by the NIU/STB for upstream transmission. Unit of measure is 0.5dBμV.

7.8.3.9.3 Link Management Messages

7.8.3.9.3.1 <MAC> Transmission Control Message

The <MAC> TRANSMISSION CONTROL MESSAGE is sent to the NIU/STB from the NRC to control several aspects of the upstream transmission. This includes stopping upstream transmission, reenabling transmission from a NIU/STB or group of NIU/STBs and rapidly changing the upstream frequency being used by a NIU/STB or group of NIU/STBs. To identify a group of NIU/STBs for switching frequencies, the <MAC> TRANSMISSION CONTROL MESSAGE is sent in broadcast mode with the `Old_Frequency` included in the message. When broadcast with the `Old_Frequency,` the NIU/STB shall compare its current frequency value to `Old_Frequency.` When equal, the NIU/STB shall switch to the new frequency specified in the message. When not equal, the NIU/STB shall ignore the new frequency and remain on its current channel.

Transmission_Control_Message(){	Bits	Bytes	Bit Number / Description
Transmission_Control_Field		**1**	
Reserved	3		7..5
Stop_Upstream_Transmission	1		4:{no, yes}
Start_Upstream_Transmission	1		3:{no, yes}
Old_Frequency_Included	1		2:{no, yes}
Switch_Downstream_OOB_Frequency	1		1:{no, yes}
Switch_Upstream_Frequency	1		0:{no, yes}
if (Transmission_Control_Field == Switch_Upstream_Frequency && Old_Frequency_Included) {			
Old_Upstream_Frequency	**32**	**4**	
}			
if (Transmission_Control_Field == Switch_Upstream_Frequency) {			
New_Upstream_Frequency	**32**	**4**	
New_Upstream_Parameters		**2**	
New_Upstream_Channel_Number	3		7..5
Reserved	2		4..3
Upstream_Rate	3		2..0:{enum}
MAC_Flag_Set	5		7..3
Reserved	3		2..0
}			
if (Transmission_Control_Field == Switch_Downstream_OOB_Frequency && Old_Frequency_Included) {			
Old_Downstream_OOB_Frequency	**32**	**4**	
}			
if (Transmission_Control_Field == Switch_Downstream_OOB_Frequency) {			
New_Downstream_OOB_Frequency	**32**	**4**	
Downstream_Type	**8**	**1**	{enum}
}			
}			

Transmission Control Field

`Transmission_Control_Field` specifies the control being asserted on the channel.

It consists of the following subfields:

`Stop_Upstream_Transmission` is a Boolean when set indicates that the NIU/STB should halt its upstream transmission.

`Old_Frequency_Included` is a Boolean when set indicates that the Old Frequency value is included in the message and should be used to determine if a switch in frequency is necessary

 © ISO/IEC 1999 - All rights reserved

Copyright International Organization for Standardization
Provided by IHS under license with ISO
No reproduction or networking permitted without license from IHS Not for Resale

`Start_Upstream_Transmission` is a Boolean when set indicates that the Network Interface Module should resume transmission on it upstream channel. The NIU/STB shall respond to the ranging and power calibration message regardless of the setting of the `Start_Upstream_Transmission` bit.

`Switch_Upstream_Frequency` is a Boolean when set indicates that a new upstream frequency is included in the message. Typically, the `Switch_Upstream_Frequency` and the `Stop_Upstream_Transmission` are set simultaneously to allow the NIU/STB to stop transmission and change channel. This would be followed by the <MAC> TRANSMISSION CONTROL MESSAGE with the `Start_Upstream_Transmission` bit set.

`Switch_Downstream_OOB_Frequency` is a Boolean when set indicates that a new downstream OOB frequency is included in the message.

Old Upstream Frequency

`Old_Upstream_Frequency` is a 32-bit unsigned integer representing the frequency that should be used by the NIU/STB to compare with its current frequency to determine if a change in channel is required.

New Upstream Frequency

`New_Upstream_Frequency` is a 32-bit unsigned integer representing the reassigned upstream carrier center frequency. The unit of measure is Hz.

New Upstream Channel Number

`New_Upstream_Channel_Number` is a 3-bit unsigned integer that provides an identifier for the upstream channel.

Upstream Rate

`Upstream_Rate` is an 3-bit enumerated type indicating the data rate for the upstream connection.

```
enum Upstream_Rate      {     Upstream_256K,
                              Upstream_1.544M,
                              Upstream_3.088M,
                              Reserved 3..7     };
```

MAC_Flag_Set

`MAC_Flag_Set` is an 5 bit field representing the MAC Flag set assigned to the connection. In the OOB downstream SL-ESF frame payload structure, each set of three bytes, denoted by Rxa- Rxc,, comprise a flag set. These eight flag sets are assigned the numbers 0..7. In the IB downstream timing, the 16 flag sets are assigned the numbers 0..15. In the case of a 3.088 Mbit/s upstream channel, two successive flag sets are required to define a 3ms period. In this case, this parameter represents the first of two successively assigned flag sets. In the case of a 3.088Mbit/s OOB downstream, two successive SL-ESF frames define the 3ms interval. The Rxa-Rxc bytes of the first frame represent flag sets 0..7 while the Rxa-Rxc bytes of the second frame represent flag sets 8..15.

Old Downstream OOB Frequency

`Old_Downstream_OOB_Frequency` is a 32-bit unsigned integer representing the frequency that should be used by the NIU/STB to compare with its current frequency to determine if a change in channel is required.

New Downstream OOB Frequency

`New_Downstream_OOB_Frequency` is a 32-bit unsigned integer representing the reassigned downstream OOB carrier center frequency. The unit of measure is Hz.

Downstream_Type

`Downstream_Type` is an 8-bit enumerated type indicating the modulation format for the downstream connection.

```
enum  Downstream_Type   {     Reserved,
                              QPSK_1.544,
                              QPSK_3.088,
                              Reserved 3..255   };
```

7.8.3.9.3.2 <MAC> Reprovision Message

The <MAC> REPROVISION MESSAGE is sent by the NRC to the NIU/STB to reassign upstream resources (maintaining the originally requested QoS parameters at the establishment of the connection.) This message is intended for channel maintenance by the NRC to redistribute or reassign resources allocated to a NIU/STB.

Copyright International Organization for Standardization
Provided by IHS under license with ISO
No reproduction or networking permitted without license from IHS Not for Resale

Reprovision_Message (){	Bits	Bytes	Bit Number / Description
Reprovision_Control_Field		**1**	
Reserved	2		7..6
Delete_Reservation_IDs	1		6:{no, yes}
New_Downstream_IB_Frequency	1		5:{no, yes}
New_Downstream_OOB_Frequency	1		4:{no, yes}
New_Upstream_Frequency_Included	1		3:{no, yes}
New_Frame_Length_Included	1		2:{no, yes}
New_Cyclic_Assignment_Included	1		1:{no, yes}
New_Slot_List_Included	1		0:{no, yes}
if (Reprovision_Control_Field &= New_Downstream_IB_Frequency) {			
New_Downstream_IB_Frequency	**32**	**4**	
}			
if (Reprovision_Control_Field &= New_Downstream_OOB_Frequency) {			
New_Downstream_OOB_Frequency	**32**	**4**	
Downstream_Type	**8**	**1**	{enum}
}			
if (Reprovision_Control_Field &= New_Upstream_Frequency_Included) {			
New_Upstream_Frequency	**32**	**4**	
New_Upstream_Parameters		**2**	
New_Upstream_Channel_Number	3		7..5
Reserved	2		4..3
Upstream_Rate	3		2..0:{enum}
MAC_Flag_Set	5		7..3
Reserved	3		2..0
}			
if (Reprovision_Control_Field &= New_Frame_Length_Included) {			
New_Frame_Control_Field	**16**	**2**	
Not_Persistent_Flag	1		15:{no, yes}
Frame_Length	15		14..0
}			
if (Reprovision_Control_Field &= New_Slot_List_Included || New_Cyclic_Assignment_Included) {			
Number_of_Connections	**8**	**1**	
for(i=0;i<Number_of_Connections;i++) {			
Connection_ID	**32**	**4**	
if (Reprovision_Control_Field &= New_Slot_List_Included) {			
Number_Slots_Defined	**8**	**1**	
for(i=0;i<Number_Slots_Assigned; i++){			
Slot_Number_Field	**16**	**2**	
Minislot_Indicator	3		15..13
Slot_Number	13		12..0
}			
}			
if (Reprovision_Control_Field &= New_Cyclic_Assignment_Included) {			
Contentionless_Start_Field	**16**	**2**	
Minislot_Indicator	3		15..13
Contentionless_Start	13		12..0
Contentionless_Dist	**16**	**2**	
Contentionless_End	**16**	**2**	
}			

 © ISO/IEC 1999 - All rights reserved

Copyright International Organization for Standardization
Provided by IHS under license with ISO
No reproduction or networking permitted without license from IHS Not for Resale

```
        }
    }
}
```

Reprovision Control Field

`Reprovision_Control_Field` specifies what modifications to upstream resources are included. It consists of the following subfields:

`Delete_Reservation_IDs` is a Boolean that indicates that the NIU/STB shall delete all Reservation IDs that have been assigned to the Connection IDs contained in this message.

`New_Downstream_OOB_Frequency` is a Boolean that indicates that a new downstream OOB frequency is specified in the message

`New_Downstream_IB_Frequency` is a Boolean that indicates that a new downstream IB frequency is specified in the message

`New_Upstream_Frequency_Included` is a Boolean that indicates that a new upstream frequency is specified in the message.

`New_Frame_Length_Included` is a Boolean that indicates that a new upstream frame is specified in the message.

`New_Slot_List_Included` is a Boolean that indicates that a new slot list is specified in the message.

`New_Cyclical_Assignment_Included` is a Boolean that indicates that a new cyclical assignment is specified in the message.

New Downstream IB Frequency

`New_Downstream_IB_Frequency` is a 32-bit unsigned integer representing the reassigned downstream IB carrier center frequency. The unit of measure is Hz.

New Downstream OOB Frequency

`New_Downstream_OOB_Frequency` is a 32-bit unsigned integer representing the reassigned downstream OOB carrier center frequency. The unit of measure is Hz.

Downstream_Type

`Downstream_Type` is an 8-bit enumerated type indicating the modulation format for the downstream connection.

```
enum  Downstream_Type   {     Reserved,
                              QPSK_1.544,
                              QPSK_3.088,
                              Reserved 3..255   };
```

New Upstream Frequency

`New_Upstream_Frequency` is a 32-bit unsigned integer representing the reassigned upstream carrier center frequency. The unit of measure is Hz.

New Upstream Channel Number

`New_Upstream_Channel_Number` is a 3-bit unsigned integer that provides an identifier for the upstream channel.

Upstream Rate

`Upstream_Rate` is an 3-bit enumerated type indicating the data rate for the upstream connection.

```
enum Upstream_Rate      {     Upstream_256K,
                              Upstream_1.544M,
                              Upstream_3.088M,
                              Reserved 3..7     };
```

MAC_Flag_Set

`MAC_Flag_Set` is an 5 bit field representing the MAC Flag set assigned to the connection.

New Frame Control Field

`Not_Persistent_Flag` is an one bit field that indicates whether the contentionless connection reprovisioning grants slots for consecutive cycles of the SL-ESF M-bit frame counter. If the value is 0, then the assignment is persistent.

`Frame_Length` is a 15-bit number that represents the number of successive slots in the contentionless access region that is associated with each contentionless slot assignment. In the slot list method of allocating slots it represents the number of successive slots associated with each element in the list. In the cyclic method of

--`,,```,,,,````-`-`,,`,,`,`,,`---
Copyright International Organization for Standardization
Provided by IHS under license with ISO
No reproduction or networking permitted without license from IHS Not for Resale

allocating slots it represents the number of successive slots associated with the Contentionless_Start_Slot and those which are multiples of Contentionless_Distance from the Contentionless_Start_Slot. If the Minislot_Indicator in the Slot_Number_Field or in the Contentionless_Start field, has a value 1..3, the Frame_Length is interpreted in minislots. If it has a value zero it is interpreted in ATM slots.

Number of Connections

`Number_of_Connections` is an 8-bit unsigned integer indicating the number of Connection IDs that are being reprovisioned.

Connection ID

`Connection_ID` is a 32-bit unsigned integer representing a connection Identifier for the NIU/STB Dynamic Connection.

Number of Slots Defined

`Number_Slots_Defined` is an 8-bit unsigned integer that represents the number of slot assignments contained in the message. The unit of measure is slots.

Slot Number Field

`Minislot_Indicator` is a 3-bit enum type that indicates if the slot is an ATM slot or a minislot and in the case of the minislot, it indicates which minislot.

```
Enum Minislot_Indicator {     ATM_Slot,
 1st minislot, 2nd minislot, 3rd minislot, Reserved 4..7};
```

`Slot_Number` is a 13-bit unsigned integer that represents the Contentionless based Slot Number assigned to the NIU/STB.

`Contentionless_Start_Field` specifies the Contentionless_Start parameters.

`Minislot_Indicator` is a 3-bit enum type that indicates if the slot is an ATM slot or a minislot and in the case of the minislot, it indicates which minislot.

```
Enum Minislot_Indicator {     ATM_Slot,
                                    1st minislot,
                                    2nd minislot,
                                    3rd minislot,
                                    Reserved 4..7     };
```

`Contentionless_Start` is a 113 bit unsigned number that represents the starting slot within the contentionless access region that is assigned to the NIU/STB. The NIU/STB may use the next Frame_Length slots of the contentionless access regions. If the Minislot_Indicator has a value 1..3, Contentionless_Start represents the upstream slot position in which the allocated minislot is located.

Contentionless Distance

`Contentionless_Distance` is 16 bit field of which the 13 LSBs represent the distance in slots between additional slots assigned to the NIU/STB. If the Minislot_Indicator has a value 1..3, Contentionless_Distance refers to minislots, if the Minislot_Indicator has a value zero, the Contentionless_Distance refers to ATM slots. The NIU/STB is assigned all slots that are a multiple of Contentionless_Distance from the Contentionless_Start_Slot. The NIU/STB may use the next Frame_Length slots of the contentionless access regions from each of these additional slots.

Contentionless End

`Contentionless_End` is 16 bit field of which the 13 LSBs indicate the last slot that may be used for contentionless access. If Contentionless_End > Contentionless_Start, then the slots assigned to the NIU/STB, as determined by using Contentionless_Start, Contentionless_Distance, and Frame_Length, cannot exceed Contentionless_End. If Contentionless_End < Contentionless_Start, then the slots assigned to the NIU/STB, as determined by using Contentionless_Start, Contentionless_Distance, and Frame_Length, must not lie in the region > Contentionless_End and < Contentionless_Start. If Contentionless_Start = Contentionless_End and the assignment is persistent, then the slots assigned to the NIU/STB, as determined by using Contentionless_Start, Contentionless_Distance, and Frame_Length will be equivalent to the case where Contentionless_End is the slot before Contentionless_Start. In the case of minislots, the Contentionless_End defines the third minislot in the upstream slot position.

7.8.3.9.3.3 <MAC> Link Management Response Message

The <MAC> LINK MANAGEMENT RESPONSE MESSAGE is sent by the NIU/STB to the NRC to indicate reception and processing of the previously sent Link Management Message. The format of the message is shown below.

 © ISO/IEC 1999 - All rights reserved

Copyright International Organization for Standardization
Provided by IHS under license with ISO
No reproduction or networking permitted without license from IHS Not for Resale

Link_Management_Response_Message(){	Bits	Bytes	Bit Number / Description
Link_Management_Msg_Number	**16**	**2**	
}			

Link Management Message Number
`Link_Management_Msg_Number` is a 16-bit unsigned integer representing the previously received link management message. The valid values for `Link_Management_Msg_Number` are:

Message Name	Link_Management_Msg_Number
Transmission Control Message	Transmission Control Message Type Value
Reprovision Message	Reprovision Message Type Value

Message Type Values are encoded according to Table.

7.8.3.9.3.4 <MAC> Status Request Message

The STATUS REQUEST message is sent by the NRC to the NIU/STB to retrieve information about the NIU/STBs health, connection information and error states. The NRC can request either the address parameters, error information, connection parameters or physical layer parameters from the NIU/STB. The NRC can only request one parameter type at a time to a particular NIU/STB.

Status_Request_Message(){	Bits	Bytes	Bit Number / Description
Status_Control_Field		**1**	
Reserved	5		7..3
Status_Type	3		2..0:{enum}
}			

Status Control Field
`Status_Type` is a 3 bit enumerated type that indicates the status information the NIU/STB should return

```
enum Status_Type        {     Address_Params,
                              Error_Params,
                              Connection_Params,
                              Physical_Layer_Params,
                              Reserved 4..7     };
```

7.8.3.9.3.5 <MAC> Status Response Message

The <MAC> STATUS RESPONSE MESSAGE is sent by the NIU/STB in response to the <MAC> STATUS REQUEST MESSAGE issued by the NRC. The contents of the information provided in this message will vary depending on the request made by the NRC and the state of the NIU/STB.

Copyright International Organization for Standardization
Provided by IHS under license with ISO
No reproduction or networking permitted without license from IHS Not for Resale

Status_Response_Message(){	Bits	Bytes	Bit Number/ Description
NIU/STB_Status		**4**	
Reserved	29		31..3
Network_Address_Registered	1		2:{no, yes}
Default_Connection_Established	1		1:{no, yes}
Calibration_Operation_Complete	1		0:{no, yes}
Response_Fields_Included		**1**	
Reserved	4		7..4
Address_Params_Included	1		3:{no, yes}
Error_Information_Included	1		2:{no, yes}
Connection_Params_Included	1		1:{no, yes}
Physical_Layer_Params_Included	1		0:{no, yes}
if (Response_Fields_Included &= Address_Params_Included) {			
NSAP_Address	**160**	**20**	
MAC_Address	**48**	**6**	
}			
if (Response_Fields_Included &= Error_Information_Included) {			
Number_Error_Codes_Included	**8**	**1**	
for(i=0; i<Number_Error_Codes_Included;i++){			
Error_Param_Code	**8**	**1**	
Error_Param_Value	**16**	**2**	
}			
}			
if (Response_Fields_Included &= Connection_Params_Included) {			
Number_of_Connections	**8**	**1**	
for(i=0; i<Number_of_Connections;i++){			
Connection_ID	**32**	**4**	
}			
}			
if (Response_Fields_Included &= Physical_Layer_Params_Included) {			
Power_Control_Setting	**8**	**1**	
Time_Offset_Value	**16**	**2**	
Upstream_Frequency	**32**	**4**	
Downstream_Frequency	**32**	**4**	
}			
}			

NIU/STB Status

`NIU/STB_Status` is a 32-bit field that indicates the current state of the NIU/STB. It contains the following subfields:

`Network_Address_Registered` indicates that the Network Interface Module has registered its NSAP Address with the Application Module. The NSAP Address is not currently used but is reserved for this purpose.

`Default_Connection_Established` indicates that the Network Interface Module has been assigned Default Connection parameters.

`Calibration_Operation_Complete` indicates that the Network Interface Module has been successfully calibrated.

Response Fields Included

`Response_Fields_Included` is an 8 bit unsigned integer that indicates what parameters are contained in the upstream status response.

NSAP Address

`NSAP_Address` is a 20 byte address assigned to the NIU/STB. The NSAP Address is not currently used but is reserved for this purpose.

 © ISO/IEC 1999 - All rights reserved

Copyright International Organization for Standardization
Provided by IHS under license with ISO
No reproduction or networking permitted without license from IHS Not for Resale

MAC Address
`MAC_Address` is a 6 byte address assigned to the NIU/STB.
Number of Error Codes Included
`Number_Error_Codes_Included` is an 8-bit unsigned integer that indicates the number of error codes are contained in the response.
Error Param Code
`Error_Param_Code` is a 8-bit enumerated type representing the type of error reported by the NIU/STB.

```
Enum Error_Param_Code   {     Framing_Bit_Error_Count,
                              Slot_Configuration_CRC_Error_Count,
                              Reed_Solomon_Error_Count,
                              ATM_Packet_Loss_Count,
                              SL-ESF_Frame_Count,
                              ATM_Cell_Count,
      Reserved    6..255      };
```

Error Param Value
`Error_Param_Value` is an 16-bit unsigned integers representing error counts detected by the NIU/STB. If the counts overflow the 16-bit range, then value returned shall be 2^16-1.
Number of Connections
`Number_of_Connections` is an 8-bit unsigned integer that indicates the number of connections that are specified in the response.
Connection ID
`Connection_ID` is a 32-bit unsigned integer representing the global connection Identifier used by the NIU/STB for this connection.
Power Control Setting
`Power_Control_Setting` is a 8-bit unsigned integer representing the actual power used by the NIU/STB for upstream transmission. Unit of measure is 0.5 dBμV.
Time Offset Value
`Time_Offset_Value` is a 16-bit signed integer representing a relative offset of the upstream transmission timing. A negative value indicates an adjustment forward in time. A positive value indicates an adjustment back in time. The unit of measure is 100 nsec.
Upstream Frequency
`Upstream_Frequency` is a 32-bit unsigned integer representing the channel on assigned to the connection. The unit of measure is in Hz.
Downstream Frequency
`Downstream_Frequency` is a 32-bit unsigned integer representing the Frequency where the connection resides. The unit of measure is in Hz.

7.8.4 Minislots

7.8.4.1 Carrying Minislots

Minislots can be utilized in both in-band signaled and out-of-band signaled systems. The in-band signaling uses the same control fields as the out-of-band signaling inside the MAC flags, and the MAC messages are the same for both in-band and out-of-band signaling case. The phrase minislot refers to a physical frame structure of the passband upstream channel. The DAVIC 1.0…1.2 passband upstream slots are called ATM slots.

7.8.4.2 Minislot framing structure

The upstream slot structure is sub-divided into three 21 byte long mini-slots. Each of these minislots can be sent by different user terminals. The upstream channel can support a mixture of ATM slots and minislots. The format of the minislot is shown in the following figure. It contains a 3 byte DAVIC Unique Word (the minislot UW and the ATM slot UW will differ to enable simple decoding of the ATM slots and the minislots by the PHY), a single byte Start field, a 16 byte payload and a single byte guard band.

--`,,```,,,,````-`-`,,`,,`,`,,`---

Copyright International Organization for Standardization
Provided by IHS under license with ISO
No reproduction or networking permitted without license from IHS Not for Resale

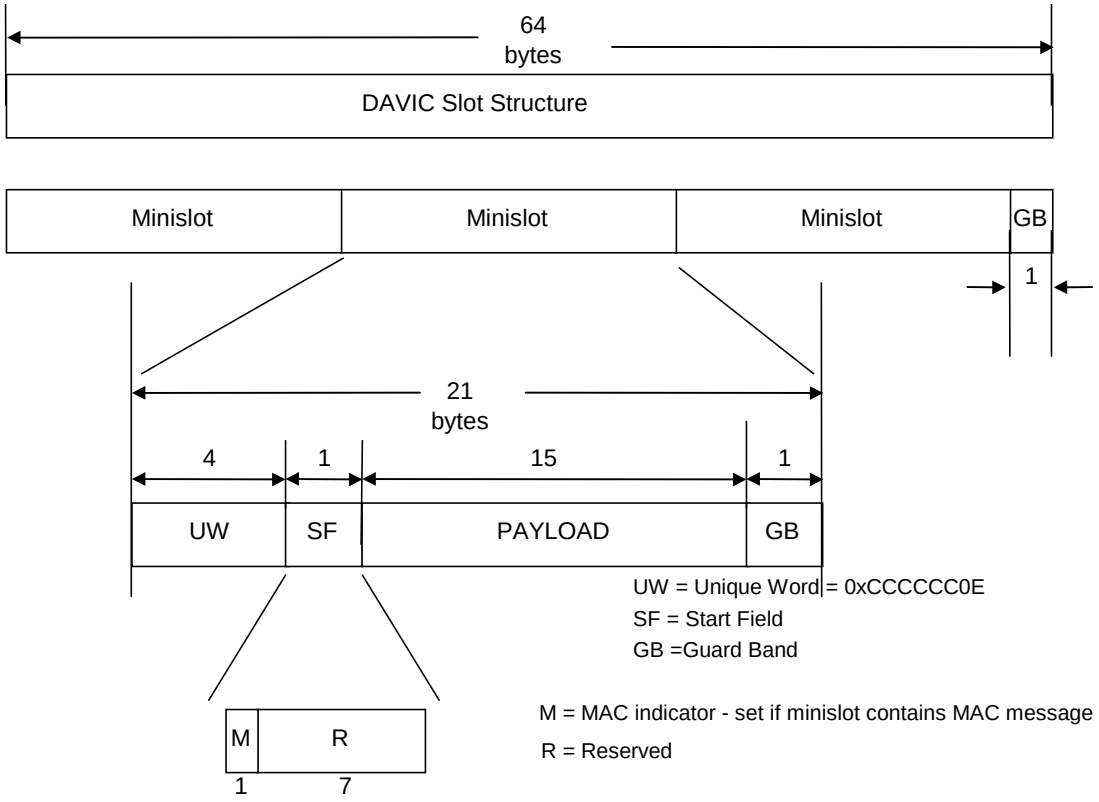

Figure 7.8-24. Minislot Framing Structure.

7.8.4.3 Contention resolution for minislots

The minislots may carry the Reservation Request MAC message. The message is sent in a contention based minislot. In the case of collision, the resolution is carried out according to a NRC controlled ternary splitting algorithm (see Figure 7.8-25). If Stack_Entry is not set a contention based minislot may enter the contention resolution when the Collision_Number in the Minislot contention allocation equals to zero, expecting that the Entry_Spreading value allows it. If Stack_Entry is set, the contention based minislot may enter the contention resolution in any of contention based minislots. The NRC may allocate a group of three contention based minislots within the boundaries of an upstream ATM slot anywhere in the reservation or contentionless region. The feedback of the contention based minislots is transmitted in the Minislot feedback section of the Reservation_Grant_Message. The feedback in the Collision_Number equals to 0xFF and 0xFE for idle and successful transmission, respectively. All other values of the Collision_Number are numbered as collisions. The retransmission of the collided contention based slots takes place in a random minislot in a group of three minislots indicated in the Allocation_Collision_Number in the Minislot allocation section of the Reservation_Grant_Message.

 © ISO/IEC 1999 - All rights reserved

--`,,```,,,,````-`-`,,`,,`,`,,`---

Copyright International Organization for Standardization
Provided by IHS under license with ISO
No reproduction or networking permitted without license from IHS
Not for Resale

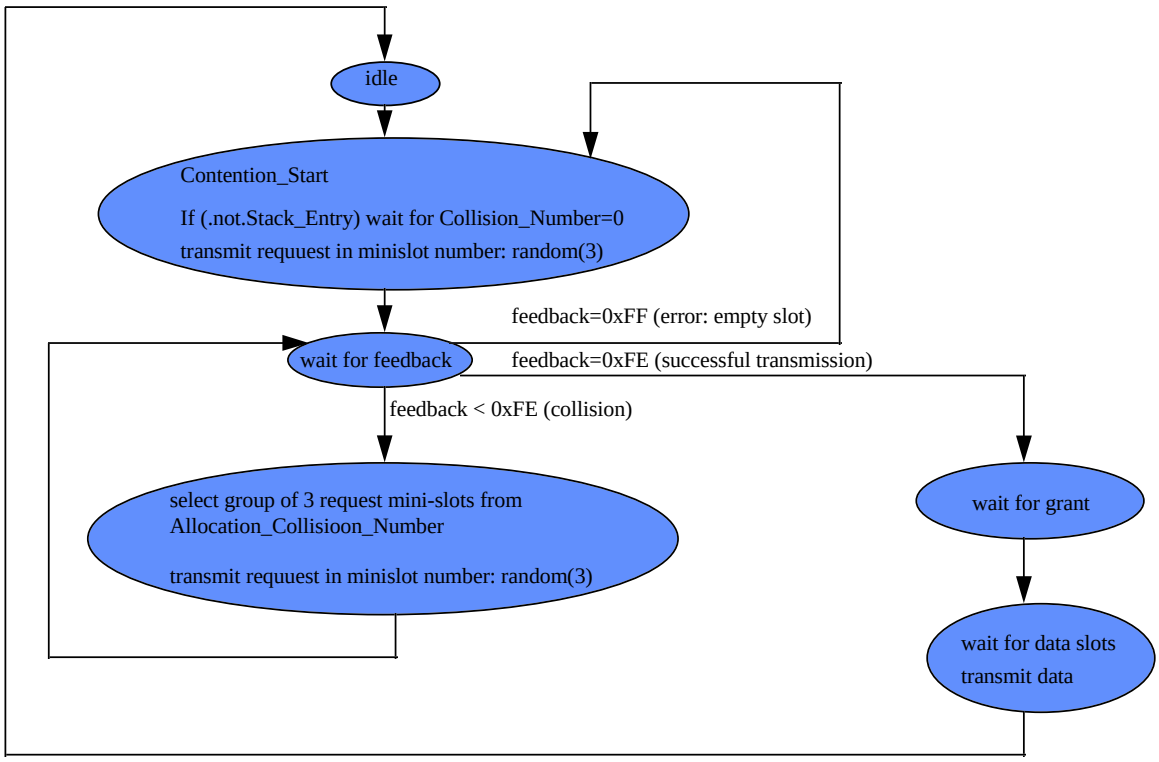

Figure 7.8-25. Ternary Splitting Algorithm

7.9 Passband Unidirectional PHY on Satellite

This section describes the complete physical layer structure, i.e. framing structure, channel coding and modulation for the carriage of S1, S2 and S3 information through a satellite transmission system (STS). Complete physical layer and framing specifications are provided for downstream information flow.

7.9.1 Satellite Downstream Transmission Specification

The satellite downstream transmission specification defined below is suitable for use on different satellite transponder bandwidths. It uses Quaternary Phase Shift Keying (QPSK) modulation and a concatenated error protection strategy based on a convolutional code and a shortened Reed-Solomon (RS) code. The convolutional coding rate can be varied allowing optimization of the system performance to specific system requirements.

7.9.1.1 Framing structure, channel coding and modulation

For systems with satellite downlink frequencies in the range 10 to 15 GHz, the satellite downstream transmission specification shall be the “Framing structure, channel coding and modulation” defined in [ETS 300 421].
For systems with satellite downlink frequencies in the range 2 to 6 GHz, the satellite downstream transmission specification shall be the “Framing structure, channel coding and modulation” defined in [ETS 300 421] with modified interleaving depth as described in section 7.9.1.3.

7.9.1.2 High Reliability Marker

Satellite receive equipment which complies with other aspects of this international standard but does not use or process the High Reliability Marker (specified in section 7.7.6 of this part of ISO/IEC 16500), whether or not it is present in the data stream received over the satellite channel, is still considered ISO/IEC 16500 compliant.

--`,,```,,,,````-`-`,,`,,`,`,,`---
Copyright International Organization for Standardization
Provided by IHS under license with ISO
No reproduction or networking permitted without license from IHS
Not for Resale

7.9.1.3 Interleaving for applications in the downlink frequency range 2 to 6GHz

For systems with satellite downlink frequencies in the range 2 to 6 GHz, the convolutional interleaving parameters defined in [ETS 300 421] shall be used but an additional set of parameters corresponding to deeper interleaving depth shall also be added. This additional set is as follows: (see [ETS 300 421] - section 4.4.2).

I = 51
M= 4

Either set may be used.

7.9.2 Interworking of Satellite and Coax Transmission (Informative)

In cases where interworking of satellite and coax transmission is required, it is recommended to select appropriate bit rates (see also Table D.1 of [ETS 300 421] and the table of useful bit rates in section 7.7.11).

7.10 Passband Bi-directional PHY on MMDS

This Physical Layer Interface supports bi-directional transmission over radio frequency (up to 10 GHz). It is referred to as MMDS (Microwave Multipoint Distribution Services).
This Physical Layer Interface describes the complete physical and medium access control layer structure, i.e. framing structure, channel coding and modulation for the carriage of S1 and S2 information through MPEG-2-TS and ATM cells. Physical layer and framing specifications are provided for each information flow.
To carry downstream content information, a combination of quadrature amplitude modulation (QAM) and a multi-rate framing structure are specified. QAM is specified due to its performance characteristics with respect to spectral efficiency. Three levels of modulation, 16 QAM, 64 QAM and 256 QAM, are defined to allow flexible implementation.
A TCM code based on TCM defined by Wei [ITU-T V.34] is also used for systems which require more flexibility. Three grade levels are defined:

Grade A:	16 and 64 QAM
Grade A+	16 and 64 QAM/TCM
Grade B	16, 64 and 256 QAM/TCM

For the three levels the TCM shall be:

Grade A	not required
Grade A+	required, but bypassable
Grade B	required, but bypassable

To carry upstream content information, a combination of DQPSK/16QAM and a multi-rate framing structure are specified.

7.10.1 Downstream MMDS

7.10.1.1 Encoding/Decoding Process

The processes in the following subclauses shall be applied as shown in Figure 7.10-1.

 © ISO/IEC 1999 - All rights reserved

--`,,```,,,,````-`-`,,`,,`,`,,`---

Copyright International Organization for Standardization
Provided by IHS under license with ISO
No reproduction or networking permitted without license from IHS Not for Resale

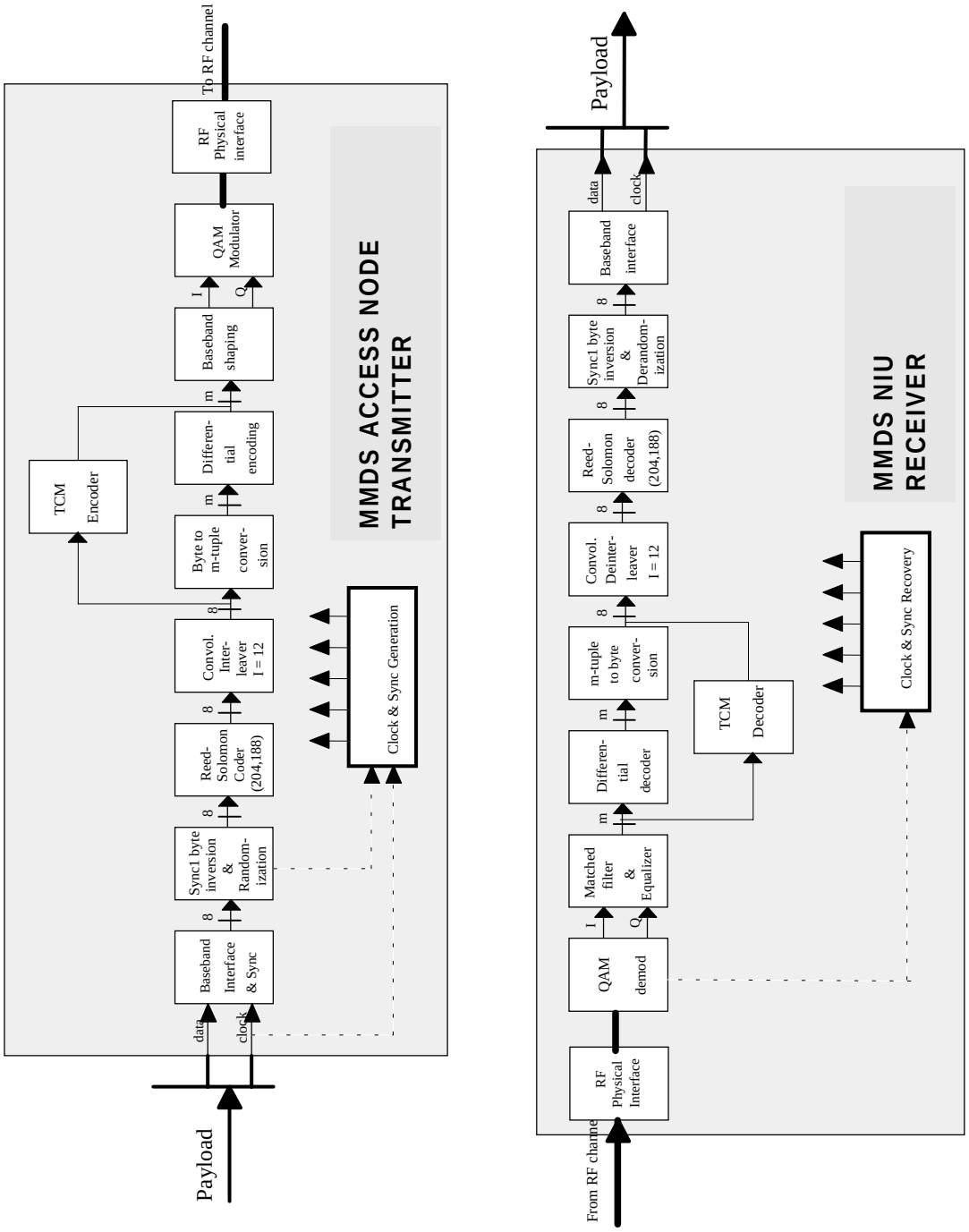

Figure 7.10-1 - Conceptual block diagram of elements at the MMDS downstream head-end and receiving site.

Copyright International Organization for Standardization
Provided by IHS under license with ISO
No reproduction or networking permitted without license from IHS
Not for Resale

7.10.1.1.1 Baseband interfacing and sync

This unit shall adapt the data structure to the format of the signal source. The framing structure shall be in accordance with MPEG-2 Transport Stream (including sync bytes).

7.10.1.1.2 Sync 1 inversion and randomization

This unit shall invert the Sync 1 byte according to the MPEG-2 framing structure, and randomizes the data stream for spectrum shaping purposes.

7.10.1.1.3 Reed-Solomon (RS) coder

This unit shall apply a shortened Reed-Solomon (RS) code to each randomized transport packet to generate an error-protected packet. This code shall also be applied to the Sync byte itself.

7.10.1.1.4 Convolutional interleaver

This unit shall perform a convolutional interleaving of the error-protected packets with I=12/M=17 (for 16 and 64 QAM) and I=204/M=1 (for 256 QAM). The periodicity of the sync bytes shall remain unchanged. To allow for lower delay, the depth of the 256 QAM interleaver can be of depth 12 or 34.

7.10.1.1.5 Byte to m-tuple conversion

This unit shall perform a conversion of the bytes generated by the interleaver into QAM symbols.

7.10.1.1.6 Differential encoding

In order to get a rotation-invariant constellation, this unit shall apply a differential encoding of the two Most Significant Bits (MSBs) of each symbol.

7.10.1.1.7 TCM encoder/decoder

When used the TCM replaces ‘Byte to m-tuple conversion’ and ‘Differential encoding’ blocks. The TCM purpose is to convolutionally encode the bits into the modulation and perform the differential encoding.
When it is not used, it shall be bypassed.

7.10.1.1.8 Baseband shaping

This unit performs mapping from differentially encoded m-tuples to I and Q signals and a square-root raised cosine filtering of the I and Q signals prior to QAM modulation.

7.10.1.1.9 QAM modulation and Physical Interface

This unit performs QAM modulation. It is followed by interfacing the QAM modulated signal to the Radio Frequency (RF) MMDS channel.

7.10.1.1.10 MMDS receiver

A System receiver shall perform the inverse signal processing, as described for the modulation process above, in order to recover the baseband signal.

7.10.1.2 MPEG-2 Transport Stream

The MPEG-2 Transport Stream is defined in [ISO/IEC 13818-1]. The Transport Stream for MPEG-2 data is comprised of packets having 188 bytes, with one byte for synchronization purposes, three bytes of header containing service identification, scrambling and control information, followed by 184 bytes of MPEG-2 or auxiliary data.

7.10.1.3 Asynchronous Transfer Mode Stream

The Asynchronous Transfer Mode stream is defined in [ITU-T I.361]. An ATM stream is comprised of packets having 53 bytes, with a five byte header including connection identification and header error control, followed by 48 bytes of ATM payload.

 © ISO/IEC 1999 - All rights reserved

Copyright International Organization for Standardization
Provided by IHS under license with ISO
No reproduction or networking permitted without license from IHS Not for Resale

7.10.1.4 Framing structure when carrying MPEG-2-TS

The framing organization shall be based on the MPEG-2 transport packet structure. The system framing structure shall be as shown in Figure 7.10-2.

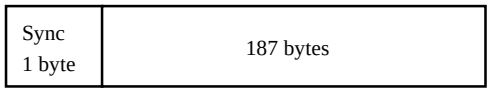

(a) MPEG2-Transport Stream MUX Packet

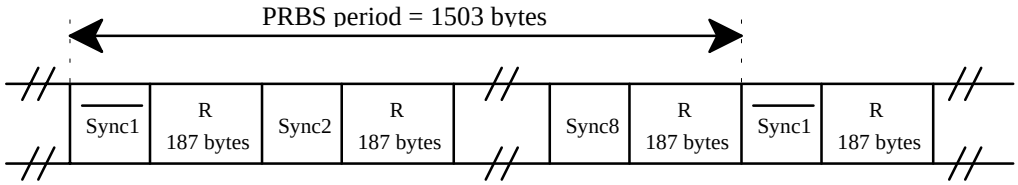

(b) Randomized transport packets: Sync bytes and Randomized Sequence R

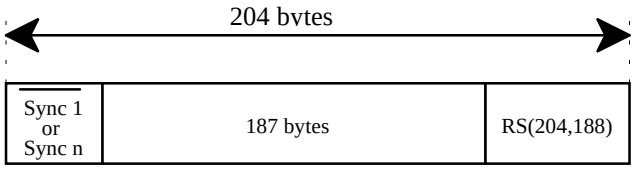

(c) Reed-Solomon RS(204,188, t=8) error protected

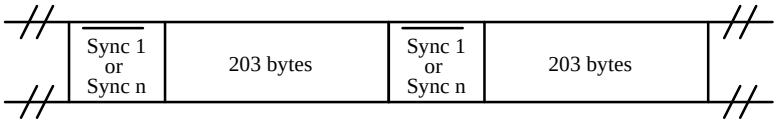

(d) Interleaved Frames with Interleaving Depth L
L=12 for 16 and 64QAM, L=12, 34 or 204 for 256QAM

Sync 1 = non-randomized, complemented sync byte
Sync n = non-randomized, sync byte, n = 2...8

Figure 7.10-2 - Framing structure when carrying MPEG-2-TS.

7.10.1.5 Framing structure when carrying ATM

7.10.1.5.1 Mapping of ATM cells

A framing structure is required to transport ATM over an MMDS network. This structure provides synchronization for interleaving and FEC block alignment appropriate to the coax environment. This function is similar to that provided by SDH and SONET frames for similar functions related to their respective environments. This structure supports the carriage of the ATM services needed for DAVIC 1.3.1a functionality. The applicability of this structure to other ATM services would need to be determined on a case by case basis.
188-byte ATM transport MUX packets shall be used for the carriage of ATM over a MMDS network. This packet structure provides synchronization and payload. The format of the packet structure is shown in Figure 7.10-3. The steps (b), (c) and (d) shown in Figure 7.10-2 shall also apply to ATM transport MUX packets.
Note that although the framing structure when carrying ATM cells uses the same length packets as for the case of when carrying MPEG-TS, it is not the intent that these packets can be passed directly into an MPEG-TS demux. This physical transport frame should not be assumed to be an MPEG-TS frame.

© ISO/IEC 1999 - All rights reserved

Copyright International Organization for Standardization
Provided by IHS under license with ISO
No reproduction or networking permitted without license from IHS
Not for Resale

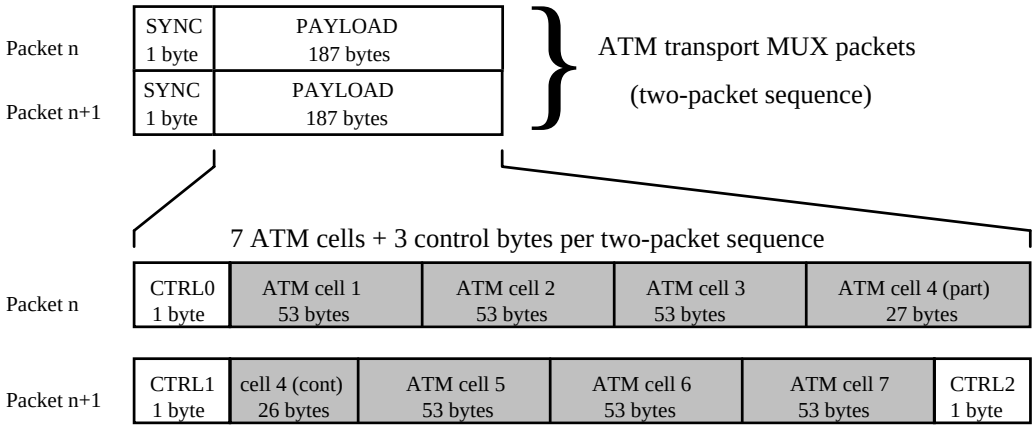

Figure 7.10-3 - Framing structure when carrying ATM.

The fields in the ATM transport MUX packets (Figure 7.10-3) are defined as:

SYNC — The sync byte is a fixed 8 bit field with value 01000111b used for frame synchronization.

PAYLOAD — This field carries 187 bytes of payload and is described in detail below.

A transmission convergence sublayer is used to map the ATM cells into the payload provided by the frame. Three bytes are defined for this functionality labeled CTRL0, CTRL1, and CTRL2. The alignment of the ATM cells is synchronized to a two packet sequence as shown below. This provides rapid cell delineation and cell delineation recovery after errors.

CTRL0 — This byte indicates that a packet is the first of the two packet sequence. Its value is E1PSSSSSb where E, P, and S bits are defined below. This also indicates that the first byte of an ATM cell immediately follows.

CTRL1 — This byte indicates that a packet is the second of a two packet sequence. Its value is E0PSSSSSb where E, P, and S bits are defined below.

CTRL2 — This byte is reserved. It will be defined for carriage of operation, administration, and maintenance information (OAM).

Definition of E, P and S bit setting:

E (error) — The transport error indicator is a 1 bit flag. When set to “1”, it indicates that at least 1 uncorrectable bit error exists in the associated packet. This bit may be set to “1” by entities in the transport layer. When set to “1”, this bit shall not be reset to “0” unless the bit value(s) in error have been corrected.

P (priority) — The transport priority is a 1 bit indicator. When set to “1”, it indicates that the associated packet is a greater priority than the packets with the transport priority set to “0”.

SSSSS (stuffing) — This fixed 5 bit field with value 11111b. Any packet without this value should be discarded. This could indicate that the associated packet is used for stuffing purposes and does not contain valid payload. One or more of these packets may be placed anywhere in the stream.

ATM Transport MUX packets and MPEG-2 Transport MUX packets shall have a common physical media dependent sublayer. This means that usage of the High Reliability Marker, channel coding, byte-to-symbol mapping, QAM modulation and baseband filter characteristics shall apply in an identical way to the transport of ATM Transport MUX packets and MPEG-2 Transport MUX packets.

7.10.1.5.2 Cell specific functionalities

7.10.1.5.2.1 HEC Generation/Verification

The entire header (including the HEC byte) shall be protected by the Header Error Control (HEC) sequence. The HEC code shall be contained in the last byte of the ATM header.

The HEC sequence shall be capable of:

- single bit error correction
- multiple-bit error detection

 © ISO/IEC 1999 - All rights reserved

Copyright International Organization for Standardization
Provided by IHS under license with ISO
No reproduction or networking permitted without license from IHS
Not for Resale

Error detection in the ATM header shall be implemented as defined in [ITU-T I.432].
The HEC byte shall be generated as described in [ITU-T I.432], including the recommended modulo-2 addition (XOR) of the pattern 01010101b to the HEC bits.
The generator polynomial coefficient set used and the HEC sequence generation procedure shall be in accordance with [ITU-T I.432].

7.10.1.5.2.2 Cell Randomization and Derandomization

Since the ATM cell boundaries are synchronous to the ATM transport MUX packets, ATM cell (de)randomization is not needed to improve the efficiency of the ATM cell delineation algorithm. Therefore, ATM cell randomization shall not be applied.

7.10.1.5.2.3 Cell Delineation

Since the ATM cell boundaries are synchronous to the ATM transport MUX packets, the implementation of an ATM cell based delineation is not needed in the STB.

7.10.1.6 High Reliability Marker (HRM)

The High Reliability Marker (HRM) is system transparent tool that provides improved packet synchronization robustness. It is a transparent tool because the inclusion or exclusion of the HRM does not affect interoperability of DAVIC system components. This transparency is accomplished by the format of the HRM as a field carried in the normal payload area of a standard MPEG-2 Transport Stream (MPEG-2 TS) null packet. The PID of the HRM is assigned a value of 0x1FFF, which is the PID value that is assigned for null packets. The HRM packet is inserted into the MPEG-2 Transport Stream prior to the framing operations of randomization and interleaving. The inclusion or exclusion of the HRM tool by DAVIC systems components (such as STBs, Delivery components, Servers, etc.) shall not affect the compliance of such components to the DAVIC specifications.
The High Reliability Marker (HRM) consists of a 184 byte Linear Feedback (LFSR) generated pattern. The HRM packet (where HRM packet is defined as an MPEG-2 TS packet which contains the PID value 0x1FFF and the HRM field in the packet payload) is sent in constant intervals of 204 packets. The LFSR generated patterns is defined by the polynomial:

$$x^8 + x^6 + x^5 + x + 1$$

with an initial seed value of 10000000.
The HRM packet is illustrated in Figure 7.10-4 .

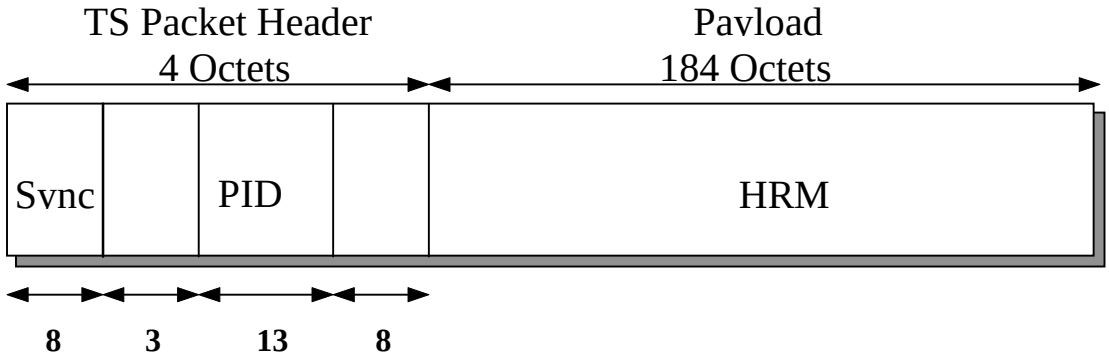

Figure 7.10-4 - HRM Packet (Octet = byte)

An important feature of the HRM tool is the fact the HRM packet is transparent in DAVIC components which do not utilize the HRM tool, and this transparency allows for full interoperability between DAVIC components which utilize the HRM tools and DAVIC components which do not utilize the HRM tool.
This transparency/interoperability issue is described as follows:
(1) A DAVIC compliant multiplexer which utilizes the HRM tool as part of its multiplex structure will produce an MPEG-2 Transport Stream in which every 204th TS packet is an HRM packet. DAVIC compliant demultiplexers that do not utilize the HRM tool will discard the MPEG-2 TS packet which contains the HRM because the null PID value will not be part of any defined program. DAVIC compliant demultiplexers that utilize the HRM tool will accept the MPEG-2 TS packet that contains the HRM, via recognition of the HRM in a designated MPEG-2 TS null packet, and will utilize this information in its packet synchronization algorithm.

© ISO/IEC 1999 - All rights reserved

Copyright International Organization for Standardization
Provided by IHS under license with ISO
No reproduction or networking permitted without license from IHS
Not for Resale

(2) A DAVIC compliant multiplexer which does not utilize the HRM tool will generate a MPEG-2 Transport Stream that does not include the HRM packet. DAVIC compliant demultiplexers that do not utilize the HRM tool are unaffected. DAVIC compliant demultiplexers that do utilize the HRM tool will operate without the HRM, although without the additional synchronization robustness that would exist if the HRM was present.

7.10.1.7 Channel coding

To achieve the appropriate level of error protection required for MMDS transmission of digital data, a FEC based on Reed-Solomon encoding shall be used. Protection against burst errors shall be achieved by the use of byte interleaving.

7.10.1.7.1 Randomization for spectrum shaping

The System input stream shall be organized in fixed length packets (see Figure 7.10-2) following the MPEG-2 transport multiplexer. The total packet length of the MPEG-2 transport MUX packet is 188 bytes. This includes 1 sync word byte (i.e. 47hex). The processing order at the transmitting side shall always start from the MSB (i.e. 0) of the sync word byte (i.e. 01000111).
In order to ensure adequate binary transitions for clock recovery, the data at the output of the MPEG-2 transport multiplex shall be randomized in accordance with the configuration depicted in Figure 7.10-5.
The polynomial for the Pseudo Random Binary Sequence (PRBS) generator shall be:

$$1 + X^{14} + X^{15}$$

Loading of the sequence "100101010000000" into the PRBS registers, as indicated in Figure 7.10-5, shall be initiated at the start of every eight transport packets. To provide an initialization signal for the derandomizer, the MPEG-2 sync byte of the first transport packet in a group of eight packets shall be bitwise inverted from 47hex to B8hex.

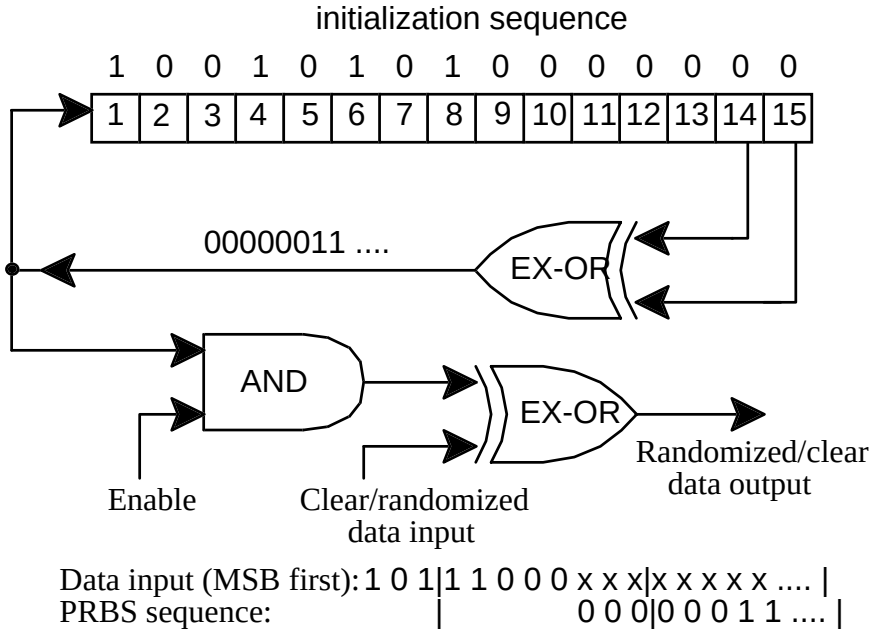

Figure 7.10-5 - Randomizer/derandomizer schematic diagram.

The first bit at the output of the PRBS generator shall be applied to the first bit of the first byte following the inverted MPEG-2 sync byte (i.e.B8hex). To aid other synchronization functions, during the MPEG-2 sync bytes of the subsequent 7 transport packets, the PRBS generation continues, but its output shall be disabled, leaving these bytes unrandomized. The period of the PRBS sequence shall therefore be 1503 bytes.
The randomization process shall be active also when the modulator input bit-stream is non-existent, or when it is non-compliant with the MPEG-2 transport stream format (i.e. 1 sync byte + 187 packet bytes). This is to avoid the emission of an unmodulated carrier from the modulator.

 © ISO/IEC 1999 - All rights reserved

Copyright International Organization for Standardization
Provided by IHS under license with ISO
No reproduction or networking permitted without license from IHS
Not for Resale

7.10.1.7.2 Reed-Solomon coding

Following the energy dispersal randomization process, systematic shortened Reed-Solomon encoding shall be performed on each randomized MPEG-2 transport packet, with T = 8. This means that 8 erroneous bytes per transport packet can be corrected. This process adds 16 parity bytes to the MPEG-2 transport packet to give a code word (204,188). RS coding shall also be applied to the packet sync byte, either non-inverted (i.e. 47hex) or inverted (i.e. B8hex).
The Reed-Solomon code shall have the following generator polynomials:
Code Generator Polynomial: $g(x) = (x+\mu^0)(x+\mu^1)(x+\mu^2) \ldots (x+\mu^{15})$, where $\mu = 02hex$
Field Generator Polynomial: $p(x) = x^8 + x^4 + x^3 + x^2 + 1$
The shortened Reed-Solomon code shall be implemented by appending 51 bytes, all set to zero, before the information bytes at the input of a (255,239) encoder; after the coding procedure these bytes are discarded.

7.10.1.7.3 Convolutional interleaving

Following the scheme of Figure 7.10-6, convolutional interleaving shall be applied to the error protected packets (see Figure 7.10-2(c)). This results in an interleaved frame (see Figure 7.10-2(d)).
The convolutional interleaving process shall be based on the Forney approach, which is compatible with the Ramsey type III approach, with I=12 for 16 and 64-QAM, and I=12, 34, or 204 for 256-QAM. The Interleaved frame shall be composed of overlapping error protected packets and shall be delimited by MPEG-2 sync bytes (preserving the periodicity of 204 bytes).
The interleaver is composed of I branches, cyclically connected to the input byte-stream by the input switch. Each branch shall be a First In First Out (FIFO) shift register, with depth (M) cells (where M = N/I, N = 204 = error protected frame length, I = interleaving depth, j = branch index). The cells of the FIFO shall contain 1 byte, and the input and output switches shall be synchronized.
For synchronization purposes, the sync bytes and the inverted sync bytes shall be always routed into the branch "0" of the interleaver (corresponding to a null delay).
The deinterleaver is similar, in principle, to the interleaver, but the branch indexes are reversed (i.e. j = 0 corresponds to the largest delay). The deinterleaver synchronization is achieved by routing the first recognized sync byte into the "0" branch.

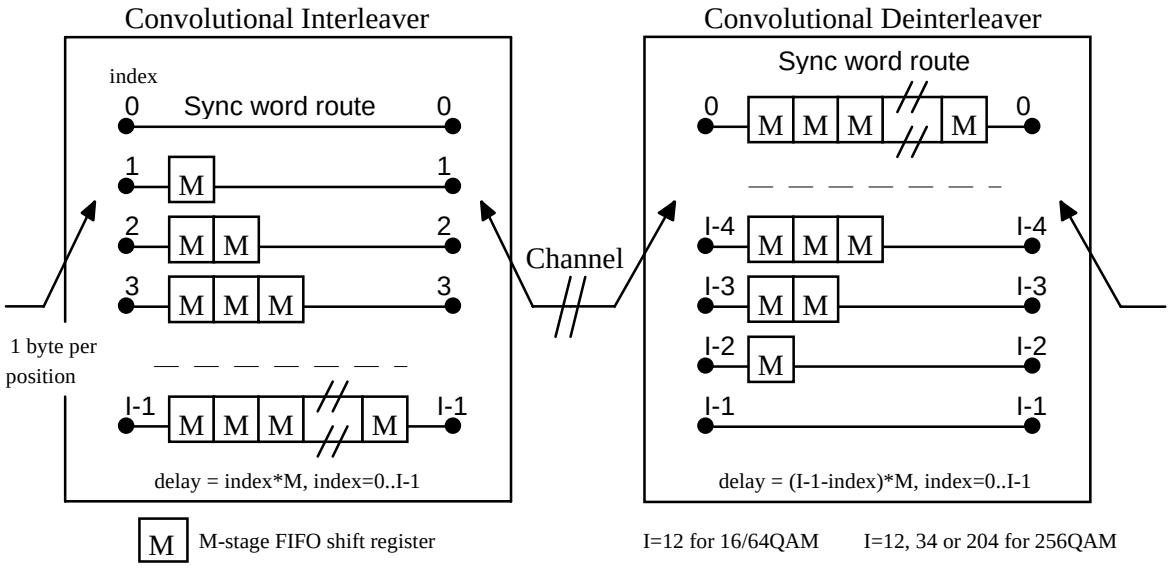

Figure 7.10-6 - Conceptual diagram of the convolutional interleaver and de-interleaver.

7.10.1.8 Byte to symbol mapping

After convolutional interleaving, an exact mapping of bytes into symbols shall be performed. The mapping shall rely on the use of byte boundaries in the modulation system.
In each case, the MSB of symbol Z shall be taken from the MSB of byte V. Correspondingly, the next significant bit of the symbol shall be taken from the next significant bit of the byte. For the case of 2^m-QAM modulation, the process shall map **k** bytes into **n** symbols, such that:

Copyright International Organization for Standardization
Provided by IHS under license with ISO
No reproduction or networking permitted without license from IHS Not for Resale

$$8\,k = n\,.\,m$$

The process is illustrated for the case of 64-QAM (where m = 6, k = 3 and n = 4) in Figure 7.10-7.

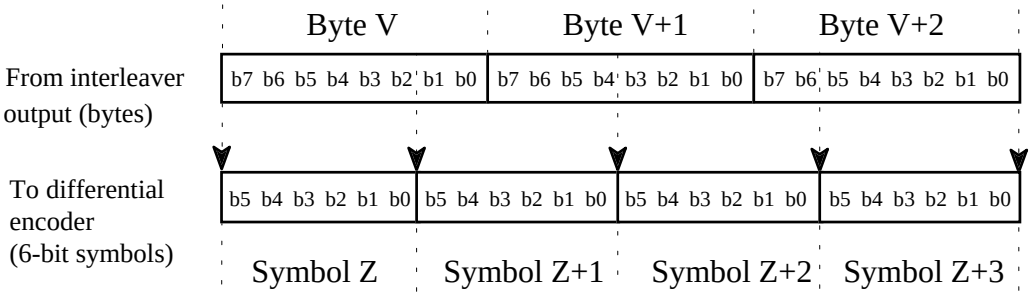

NOTE 1: b0 shall be understood as being the Least Significant Bit (LSB) of each byte or m-tuple.

NOTE 2: In this conversion, each byte results in more than one m-tuple, labeled Z, Z+1, etc. with Z being transmitted before Z+1.

Figure 7.10-7 - Byte to m-tuple conversion for 64-QAM

7.10.1.9 Differential encoding

The two most significant bits of each symbol shall then be differentially coded in order to obtain a π/2 rotation-invariant QAM constellation. The differential encoding of the two MSBs shall be given by the following boolean expression:

$$I_k = \overline{\left(A_k \oplus B_k\right)}.\left(A_k \oplus I_{k-1}\right) + \left(A_k \oplus B_k\right).\left(A_k \oplus Q_{k-1}\right)$$

$$Q_k = \overline{\left(A_k \oplus B_k\right)}.\left(B_k \oplus Q_{k-1}\right) + \left(A_k \oplus B_k\right).\left(B_k \oplus I_{k-1}\right)$$

Note: For the above boolean expression "⊕" denotes the EXOR function, "+" denotes the logical OR function, "." denotes the logical AND function and the overbar denotes inversion.

Figure 7.10-8 gives an example of implementation of byte to symbol conversion.

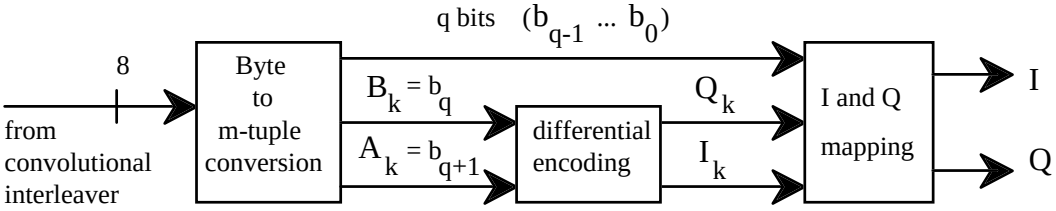

q=2 for 16QAM, q=4 for 64QAM, q=6 for 256QAM

Figure 7.10-8 - Example implementation of the byte to m-tuple conversion and the differential encoding of the two MSBs.

7.10.1.10 QAM Constellation Mapping

The System constellation diagrams for 16-QAM, 64-QAM and 256-QAM are given in respectively in the Figure 7.10-9, Figure 7.10-10 and Figure 7.10-11 (Figure 7.10-12 for the 256 QAM I=12 interleaver case).
As shown in the constellation diagrams, the constellation points in Quadrant 1 shall be converted to Quadrants 2, 3 and 4 by changing the two MSB (i.e. I_k and Q_k) and by rotating the q LSBs according to the following rule given in Table 7-29.

 © ISO/IEC 1999 - All rights reserved

Copyright International Organization for Standardization
Provided by IHS under license with ISO
No reproduction or networking permitted without license from IHS
Not for Resale

Table 7-29 - Conversion of constellation of quadrant 1 to other quadrants of the constellation diagrams given in Figure 7.10-9, Figure 7.10-10, Figure 7.10-11 and Figure 7.10-12.

Quadrant	MSBs	LSBs rotation
1	00	0
2	10	+ π/2
3	11	+ π
4	01	+ 3π/2

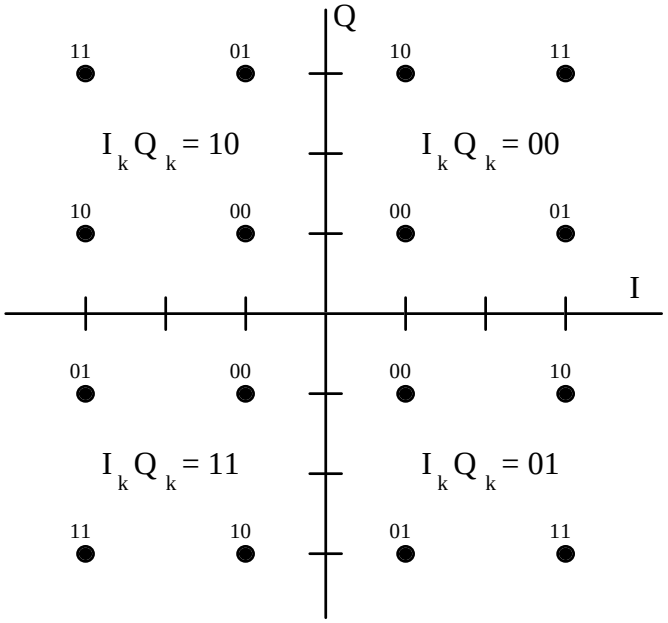

Figure 7.10-9 - 16 QAM Constellation diagram

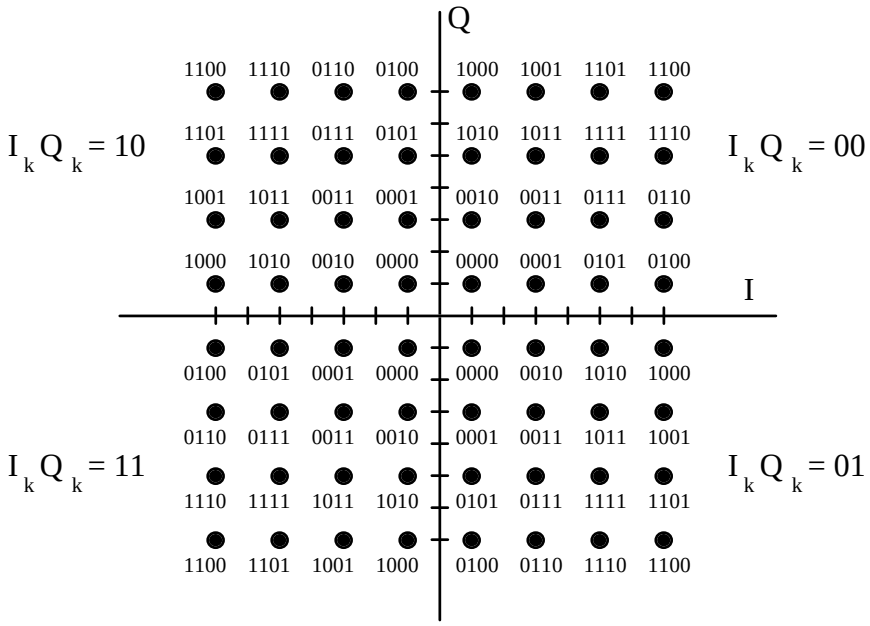

Figure 7.10-10 - 64 QAM Constellation Diagram

Copyright International Organization for Standardization
Provided by IHS under license with ISO
No reproduction or networking permitted without license from IHS
Not for Resale

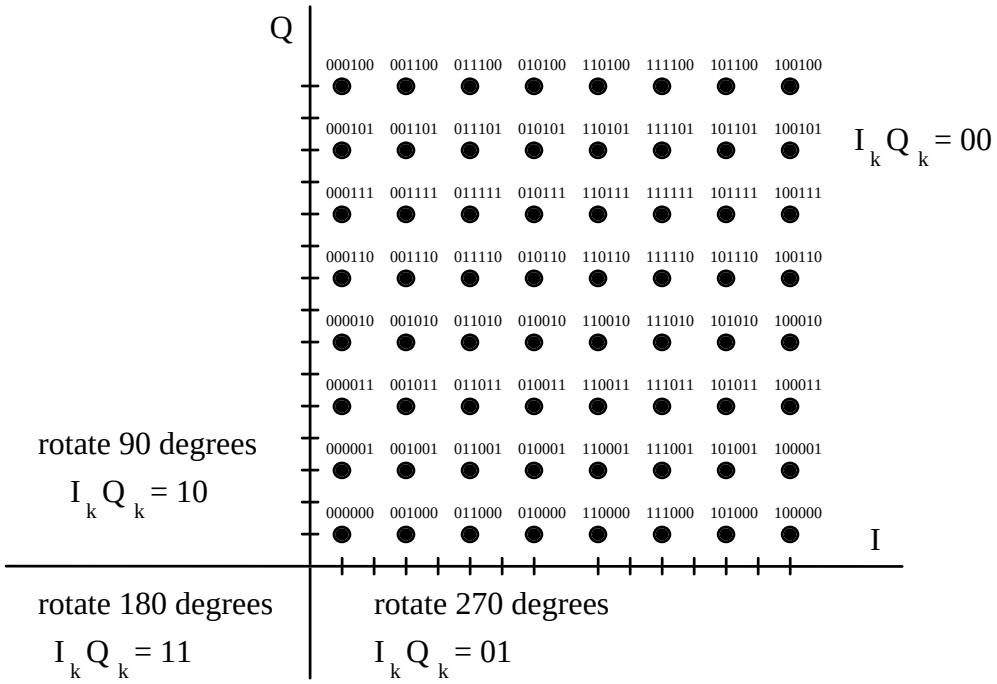

Figure 7.10-11 - 256 QAM Constellation Diagram. I_kQ_k are the two MSBs in each quadrant and should be prepended to the constellation values to complete the 8-bit value.

When the I=12 interleaver is used for 256 QAM, the following constellation shall be used. The same scheme as described above shall be applied to obtain the constellations points in the other 3 quadrants.

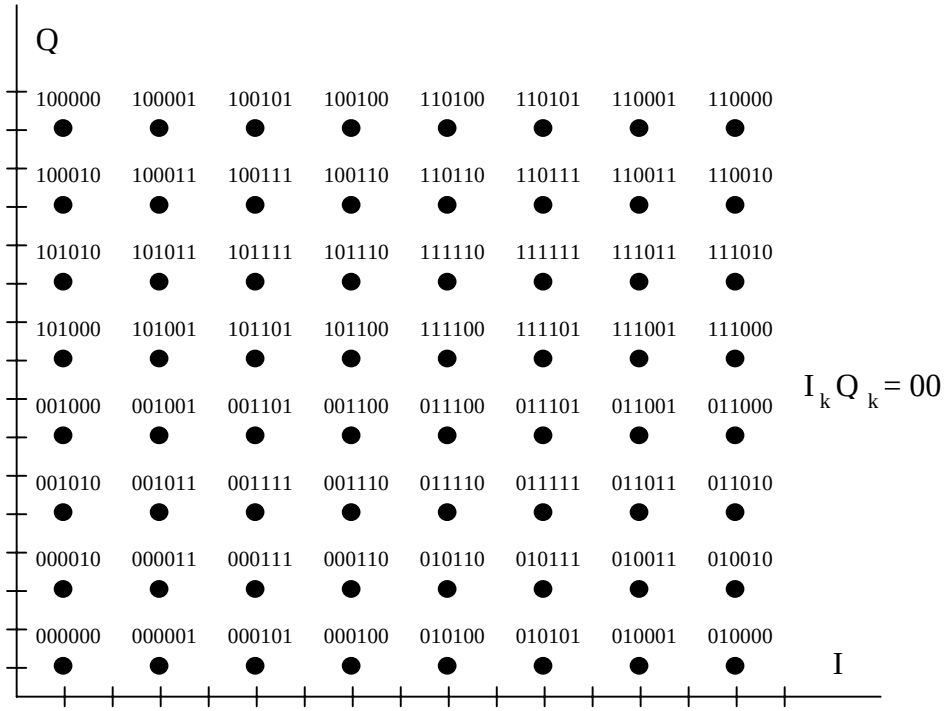

Figure 7.10-12 - 256 QAM Constellation Diagram for I = 12 Interleaver

7.10.1.11 TCM encoder/decoder

TCM replaces the byte-to-symbol mapping, differential encoding and QAM constellation mapping given in the previous sections. It is a coding scheme that consists of the combination of a differential encoder, a convolutional

 © ISO/IEC 1999 - All rights reserved

--`,,```,,,,````-`-`,,`,,`,`,,`---

Copyright International Organization for Standardization
Provided by IHS under license with ISO
No reproduction or networking permitted without license from IHS
Not for Resale

encoder, and a mapper to the signal constellation. This takes place after the RS encoder and convolutional interleaver, instead of the byte-to-symbol conversion used when TCM is bypassed, as shown in Figure 7.10-13 . This coding scheme does neither modify the shape of the constellation, nor the spectrum shape, but only provides additional coding gain which may increase the coverage area of the MMDS transmitter.
Three grade levels are defined for MMDS:
Grade A: 16 and 64 QAM
Grade A+ 16 and 64 QAM/TCM
Grade B 16, 64 and 256 QAM/TCM
For the three levels the TCM shall be:
Grade A not required
Grade A+ required, but bypassable
Grade B required, but bypassable
The MMDS receiver can detect whether TCM is used or not by trying and checking is frame lock is acquired.

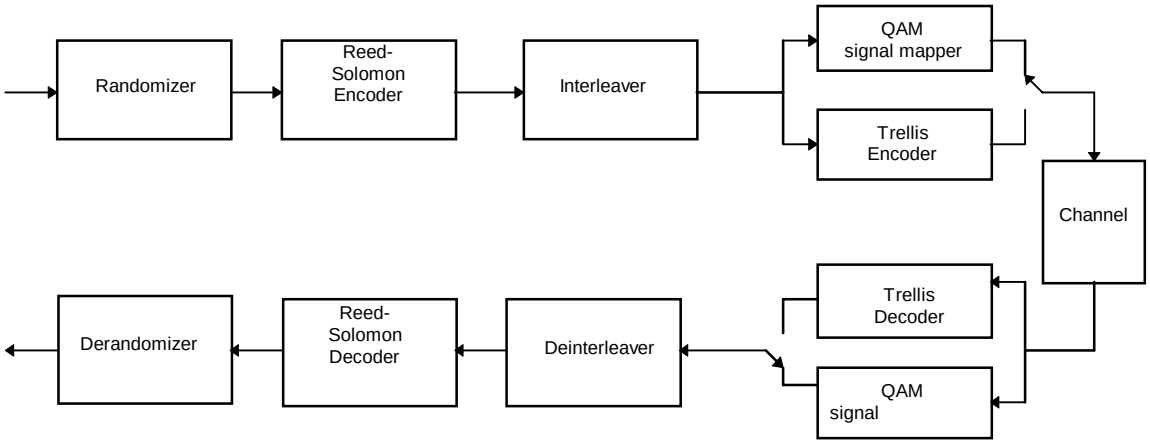

Figure 7.10-13 - Reference model at the transmitter and receiver site

The TCM scheme is 4 dimensional, i.e., spans over 2 consecutive symbol periods. It is 90^0 rotationally invariant. After an MSB first byte-to-serial conversion, bits are converted into parallel m-tuples at half the baud rate, where m=2q+3 (q=2 for 16-QAM, q=4 for 64-QAM, q=6 for 256-QAM). A differential encoder encodes two out of the 3 MSBs. These two bits are then convolutionally encoded into 3 encoded bits. The 3 encoded bits and the 2q+1 uncoded bits are finally mapped into 2 consecutive I-Q symbols as shown in Figure 7.10-14 .

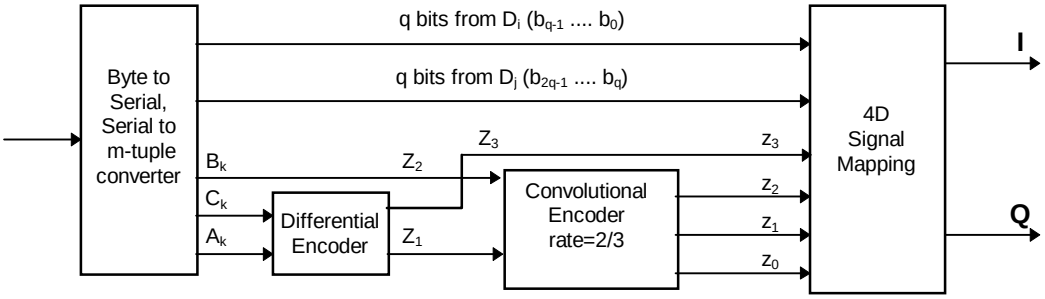

Figure 7.10-14 - Reference model of the TCM encoder

7.10.1.11.1 TCM Byte-to-Serial and Serial-to-m-tuple Conversion

Bytes coming out of the convolutional interleaver first need to be serialized MSB first before conversion into m-tuples as shown in Figure 7.10-7. The first bit in time is indicated by b_0. The q LSBs are indexed 0 to q-1, the next q bits are indexed q to 2q-1. The 3 MSBs (last in time) are indicated by $C_k=b_{2q}$, $B_k=b_{2q+1}$, and $A_k=b_{2q+2}$. (k is the time index)

last in time first in time

		b13	b12	b11	b10	b9	b8	b7	b6	b5	b4	b3	b2	b1	b0

Figure 7.10-15 - Serial bit stream before serial to parallel conversion

Copyright International Organization for Standardization
Provided by IHS under license with ISO
No reproduction or networking permitted without license from IHS Not for Resale

7.10.1.11.2 TCM Differential encoder

$Z_k^2 = B_k$ remains unchanged in the differential encoder. The other two MSBs A_k and C_k are differentially encoded into Z_k^1 and Z_k^3 as shown in Figure 7.10-16. The following Boolean expressions are implemented:

$$Z_k^3 = Z_{k-2}^3 \oplus Z_{k-2}^1 \bullet A_k \oplus C_k$$
$$Z_k^2 = B_k$$
$$Z_k^1 = A_k \oplus Z_{k-2}^1$$

A detailed reference model of the TCM encoder is shown in the following figure.

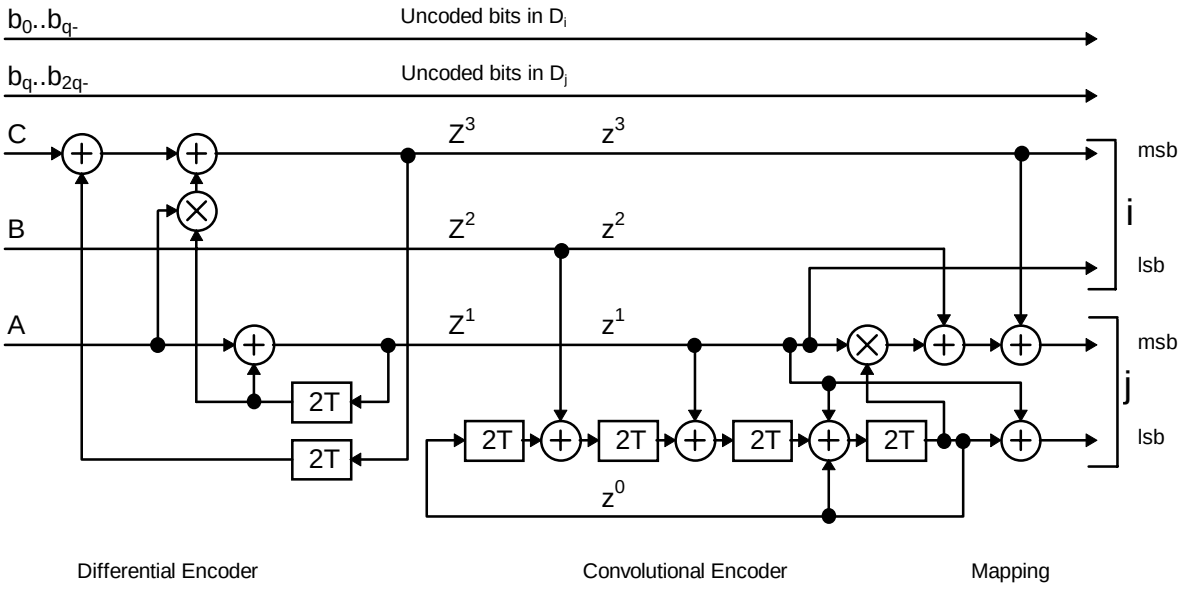

Figure 7.10-16 - Detailed reference model of the TCM encoder

7.10.1.11.3 TCM Convolutional encoder

The convolutional encoder is a 16 states rate 2/3 encoder that works at half the baud rate. z_0 is obtained from z_1, and z_2 by the following rational equation:

$$z_1 = Z_1$$
$$z_2 = Z_2$$
$$z_3 = Z_3$$
$$z_0 = \frac{Z_2 D^3 + Z_1 D + Z_1 D^2}{1 + D + D^4}$$

7.10.1.11.4 TCM I-Q 4D and QAM constellation mapping

The 2q uncoded bits and (z_3, z_2, z_1, z_0) are then mapped into two consecutive QAM symbols. The first, resp. the second symbol is given by selecting a subset D_i, resp. D_j in the constellation that depends on (z_3, z_2, z_1, z_0) as defined in Table 7-30, and a point in this subset given by the first, resp. the second set of q uncoded symbols.

 © ISO/IEC 1999 - All rights reserved

Copyright International Organization for Standardization
Provided by IHS under license with ISO
No reproduction or networking permitted without license from IHS
Not for Resale

Table 7-30 - Subsets Allocation

(z_0,z_1,z_2,z_3)	(D_i, D_j)
0000	(D_0, D_0)
0001	(D_2, D_2)
0010	(D_0, D_2)
0011	(D_2, D_0)
0100	(D_1, D_1)
0101	(D_3, D_3)
0110	(D_1, D_3)
0111	(D_3, D_1)
1000	(D_0, D_1)
1001	(D_2, D_3)
1010	(D_0, D_3)
1011	(D_2, D_1)
1100	(D_1, D_2)
1101	(D_3, D_0)
1110	(D_1, D_0)
1111	(D_3, D_2)

The D_i subsets are given for each set of q uncoded bits shown (LSB..MSB) in the QAM constellations. The 16-QAM, 64-QAM and 256-QAM constellations are shown in Figure 7.10-17, Figure 7.10-18, and Figure 7.10-19, respectively.

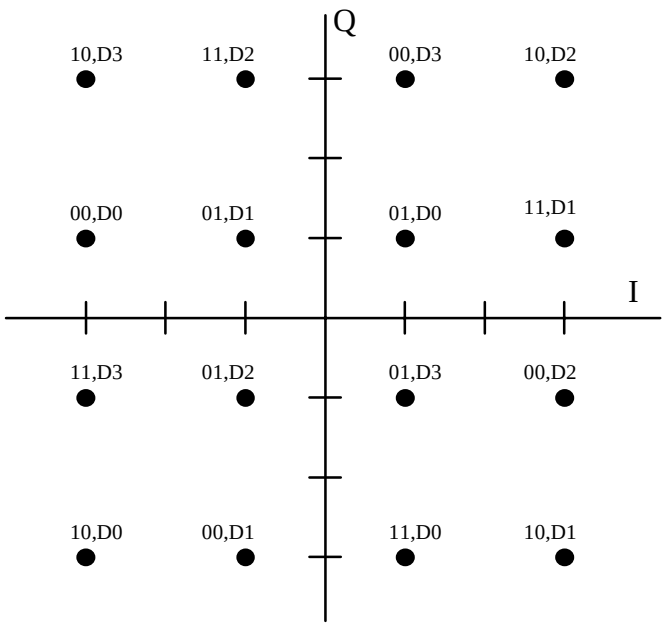

Figure 7.10-17 - 16-QAM uncoded bits and corresponding subset.

Copyright International Organization for Standardization
Provided by IHS under license with ISO
No reproduction or networking permitted without license from IHS
Not for Resale

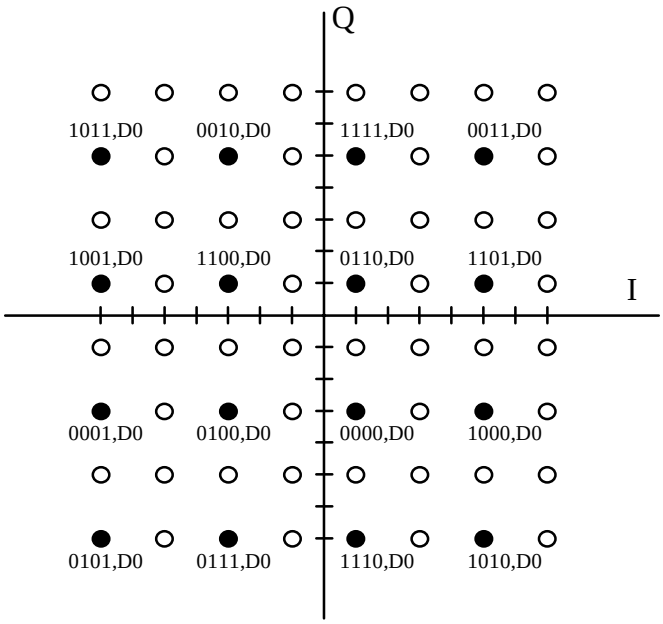

D_1, D_2, D_3 subsets cover the non-filled dots and are obtained by rotating the above D_0 subset by 90^0 from the previous one, as shown for the 16QAM constellation.

Figure 7.10-18 - 64-QAM uncoded bits and corresponding subset.

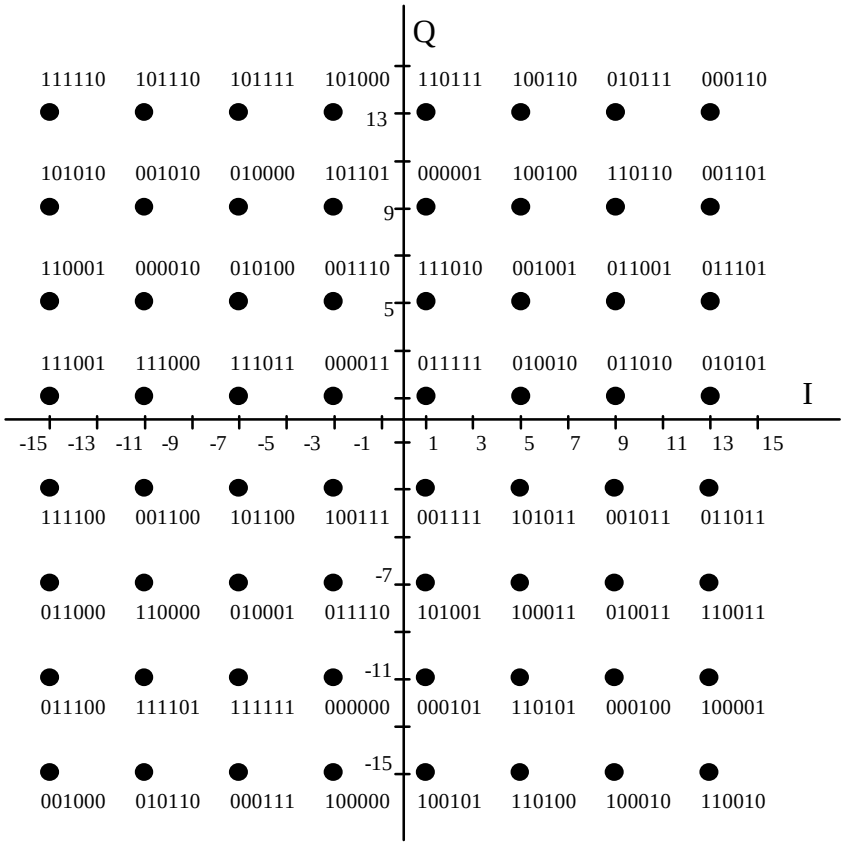

D_1, D_2, D_3 subsets are obtained by rotating the above D_0 subset by 90^0 from the previous one, as shown for the 16QAM constellation.
(non-filled dots as for 64QAM constellation not shown here)

Figure 7.10-19 - 256-QAM uncoded bits for D_0 subset.

 © ISO/IEC 1999 - All rights reserved

Copyright International Organization for Standardization
Provided by IHS under license with ISO
No reproduction or networking permitted without license from IHS
Not for Resale

7.10.1.12 Quadrature Amplitude Modulation (QAM)

Quadrature amplitude modulation (QAM) is used as a means of encoding digital information over wireline, wireless or fiber transmission links. The method is a combination of amplitude and phase modulation techniques. The technique is used as a result of its performance with respect to spectral efficiency.
QAM is closely related to the original non-return-to-zero (NRZ) baseband transmission. All QAM versions can be formed by generating two multilevel pulse sequences from the initial NRZ sequence, and applying these to two carriers that are offset by a phase shift of 90 degrees. Each modulated carrier then yields an AM signal with suppressed carrier. Since carrier multiplication in the time domain corresponds to a shift in the frequency domain, the modulated spectrum maintains the shape of the two-sided baseband signal spectrum.
The spectrum of a QAM system is determined by the spectrum of the baseband signals applied to the quadrature channels. Since these signals have the same basic structure as the baseband PSK signals, QAM spectrum shapes are identical to PSK spectrum shapes with equal numbers of signal points.
Even though the spectrum shapes are identical, the error performances of the two systems are quite different. With large numbers of signal points, QAM systems always outperform PSK systems. The basic reason is that the distance between signal points in a PSK system is smaller than the distance between points in a comparable QAM system.
QAM can have any number of discrete digital levels. Common levels are 4 QAM, 16 QAM, 64 QAM and 256 QAM. It is based on amplitude modulation of “quadrature” carriers, 90 degrees out of phase with each other. For the DAVIC specification, 16 QAM, 64 QAM and 256 QAM levels are defined.

Table 7-31 - Specifications for QAM Modulation (Downstream)

Modulation	Three grades are defined: Grade — Modulation A — 16 and 64 QAM A+ — 16 and 64 QAM/TCM B — 16, 64 and 256 QAM/TCM
Channel Spacing	6 MHz or 8 MHz
Symbol Rate	6 MHz: The STB shall support at least one rate within the 5 - 5.304 Mbaud symbol rate range. The value shall be a multiple of 8 kHz. (Informative: The Recommended value is 5.304 Mbaud) 8 MHz: The STB shall support at least one rate within the 6 - 6.952 Mbaud symbol rate range. The value shall be a multiple of 8 kHz. (Informative: The Recommended value is 6.952 Mbaud)
Transmitted Spectrum	Square root raised cosine approximation. Roll-off factor: Alpha = 0.13 (for 6 MHz) or Alpha = 0.15 (for 8 MHz).
Modulation I/Q amplitude imbalance	< 1.0 dB
Modulation I/Q timing misalignment	< 0.02 T (T = Symbol Period)
Modulation quadrature phase imbalance	< 1 degree

--`,,```,,,,````-`-`,,`,,`,`,,`---

Copyright International Organization for Standardization
Provided by IHS under license with ISO
No reproduction or networking permitted without license from IHS Not for Resale

Table 7-32 - Specifications for Radio Frequency (Downstream)

Downstream Transmitter Input Specifications	
Channel Spacing	6 or 8 MHz
Frequency Error	< 1 kHz
Phase Noise (64QAM) Note: for 256QAM the phase noise specs should be 6 dB lower (e.g. -101 dBc/Hz at 10 kHz)	< -85 dBc/Hz @ 1 kHz < -95 dBc/Hz @ 10 kHz < -110 dBc/Hz @ 100 kHz and above
Gain Flatness	± 0.5 dB across channel
IF Input Frequency	36 or 44 MHz
Input Level	85 dBμV
Input Connector	female F type
Input Impedance	75 Ω
Input Return Loss	> 20 dB
Subscriber Downconverter Output Specifications	
Output Frequency	54 - 860 MHz The receiver shall operate over the entire specified range.
Frequency Error	< 75 kHz
Phase Noise (64 QAM) Note: for 256QAM, the phase noise specs should be 6 dB lower (e.g. -91 dBc/Hz at 10 kHz)	< -75 dBc/Hz @ 1 kHz < -85 dBc/Hz @ 10 kHz < -100 dBc/Hz @ 100 kHz and above
Noise Figure	< 4.5 dB
Image Rejection	> 40 dB
IF Rejection	> 60 dB
LNB DC Power	+21 V ±10% for 0 - 300 mA load (Means to cut DC power and over current should be provided)
Output Connector	female F type
Output Impedance	75 Ω
Output Return Loss	> 10 dB
Output Level	50 - 80 dBμV
Gain Flatness	± 1 dB across channel ± 3 dB across the allocated MMDS frequency band

The modulation of the System shall be Quadrature Amplitude Modulation (QAM) with 16, 64 or 256 points in the constellation diagram.

7.10.1.13 Baseband filter characteristics

Prior to modulation, the I and Q signals shall be square-root raised cosine filtered. The roll-off factor shall be 0.13 (for 6 MHz) or 0.15 (for 8 MHz). The square-root raised cosine filter shall have a theoretical function defined by the following expression:

$$\begin{cases} H(f) = 1 & for \left|f\right| < f_N(1-\alpha) \\ H(f) = \left\{\frac{1}{2} + \frac{1}{2}\sin\frac{\pi}{2f_N}\left[\frac{f_N - \left|f\right|}{\alpha}\right]\right\}^{1/2} & for\ f_N(1-\alpha) \le \left|f\right| \le f_N(1+\alpha) \\ H(f) = 0 & for \left|f\right| > f_N(1+\alpha) \end{cases}$$

where $f_N = \frac{1}{2T_s} = \frac{R_s}{2}$ is the Nyquist frequency

and roll-off factor α = 0.13 (for 6 MHz) or α=0.15 (for 8 MHz).

The transmitter filter characteristic is given in the following section.

 © ISO/IEC 1999 - All rights reserved

Copyright International Organization for Standardization
Provided by IHS under license with ISO
No reproduction or networking permitted without license from IHS Not for Resale

7.10.1.13.1 Impulse Response for the Transmit Filters

The time-domain response of a square-root raised-cosine pulse with excess bandwidth parameter α is given by:

$$g(t) = \frac{\sin\left[\frac{\pi t}{T}(1-\alpha)\right] + \frac{4\alpha t}{T}\cos\left[\frac{\pi t}{T}(1+\alpha)\right]}{\frac{\pi t}{T}\left[1-\left(\frac{4\alpha t}{T}\right)^2\right]}$$

where T is the symbol period.
The output signal shall be defined as

$$S(t) = \left[\sum_n I_n \bullet g(t-nT)\right] \bullet \cos(2\pi f_c t) - \left[\sum_n Q_n \bullet g(t-nT)\right] \bullet \sin(2\pi f_c t)$$

where T is the symbol period ($T=1/f_s$), and f_c the modulator's carrier frequency.
I_n and Q_n equal to ±1 or ±3, independently from each other, for 16-QAM;
I_n and Q_n equal to ±1 or ±3 or ±5 or ±7, independently from each other, for 64-QAM;
I_n and Q_n equal to ±1 or ±3 or ±5 or ±7 or ±9 or ±11 or ±13 or ±15, independently from each other, for 256-QAM.
The convolution of the transmitter filter impulse response with itself shall have low intersymbol interference less than -40dB (RMS).

7.10.1.13.2 Baseband filter characteristics for 8 MHz

The template given in Figure 7.10-20 shall be used as a minimum requirement for hardware implementation of the Nyquist filter. This template takes into account not only the design limitations of the digital filter, but also the artifacts coming from the analogue processing components of the System (e.g. D/A conversion, analogue filtering, etc.).
The value of in-band ripple r_m in the pass-band up to 0.85 f_N shall be lower than 0.4 dB. The out-of-band rejection shall be greater than 43 dB. The ripple r_N at the Nyquist frequency f_N shall be lower than 0.4 dB. The filter shall be phase linear with the group delay ripple ≤ 0.1 T_s up to f_N where, $T_s = 1/R_s$ is the symbol period. The group delay distortion is assumed to be from the analog filtering.

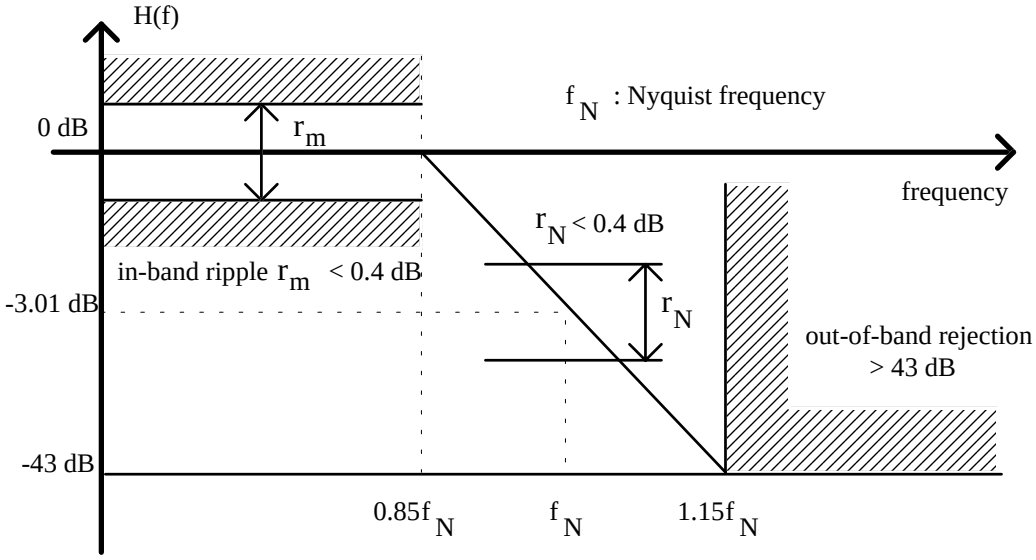

Figure 7.10-20 - Half Nyquist baseband filter amplitude characteristics for 8 MHz

7.10.1.13.3 Baseband filter characteristics for 6 MHz

The template given in Figure 7.10-21 shall be used as a minimum requirement for hardware implementation of the Nyquist filter. This template takes into account not only the design limitations of the digital filter, but also the artifacts coming from the analogue processing components of the System (e.g. D/A conversion, analogue filtering, etc.).

Copyright International Organization for Standardization
Provided by IHS under license with ISO
No reproduction or networking permitted without license from IHS Not for Resale

The value of in-band ripple r_m in the pass-band up to 0.87 f_N shall be lower than 0.4 dB. The out-of-band rejection shall be greater than 43 dB. The ripple r_N at the Nyquist frequency f_N shall be lower than 1.0 dB. The filter shall be linear phase with the group delay ripple $\leq$ 1.0 T_s (ns) in the pass-band up to 0.87 f_N and $\leq$ 2.0 T_s at f_N, where $T_s = 1/R_s$ is the symbol period. The group delay distortion is assumed to be from the analog filtering.

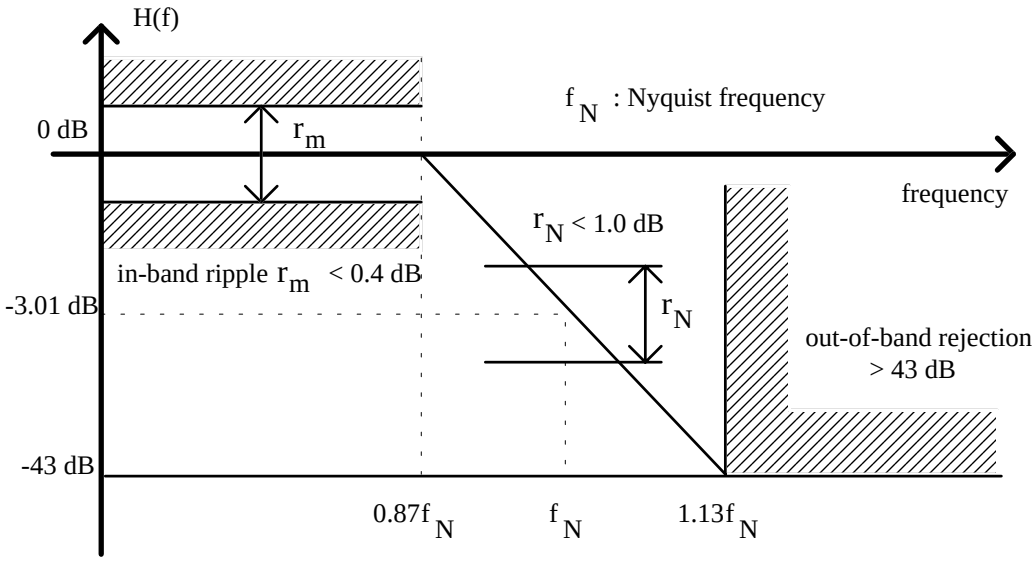

Figure 7.10-21 - Half Nyquist baseband filter amplitude characteristics for 6 MHz.

7.10.1.14 Information Bit Rate

Table 7-33 and Table 7-34 give examples of the wide range of possible MMDS symbol rates and occupied bandwidths for different useful bit rates considering 16-QAM, 64-QAM and 256-QAM constellations for non-TCM and TCM respectively.

Table 7-33 - Examples of useful bit rates R_u and total bit rates R_t using recommended symbol res (roll-off = 13% for 6 MHz and roll-off = 15% for 8 MHz) for non-TCM.

Modulation scheme	Useful bit rate R_u (MPEG-2 transport layer) [Mbit/s]	Total bit rate $R_{t'}$ including RS(204,188) and HRM if applied [Mbit/s]	MMDS symbol rate [Mbaud]	Occupied bandwidth [MHz]
16-QAM	19.448	21.216	5.304	6.0
64-QAM	29.172	31.824	5.304	6.0
256-QAM	38.896	42.432	5.304	6.0
16-QAM	25.491	27.808	6.952	8.0
64-QAM	38.236	41.712	6.952	8.0
256-QAM	50.981	55.616	6.952	8.0
16-QAM (HRM)	19.353*	21.216	5.304	6.0
64-QAM (HRM)	29.030*	31.824	5.304	6.0
256-QAM (HRM)	38.706*	42.432	5.304	6.0
16-QAM (HRM)	25.367*	27.808	6.952	8.0
64-QAM (HRM)	38.050*	41.712	6.952	8.0
256-QAM (HRM)	50.732*	55.616	6.952	8.0

 © ISO/IEC 1999 - All rights reserved

Copyright International Organization for Standardization
Provided by IHS under license with ISO
No reproduction or networking permitted without license from IHS
Not for Resale

(*) The data rate shown is the effective data rate excluding HRM. Actual bit rate of MPEG-2-TS is the same as for non-HRM, as HRM is inserted in the MPEG-2-TS multiplexing process and removed in the demultiplexing process.

Table 7-34 - Examples of useful bit rates R_u and total bit rates R_t using recommended symbol rates (roll-off = 13% for 6 MHz and roll-off = 15% for 8 MHz) for TCM.

Modulation scheme	Useful bit rate R_U (MPEG-2 transport layer) [Mbit/s]	Total bit rate $R_{t'}$ including RS(204,188), TCM, HRM if applied [Mbit/s]	MMDS symbol rate [Mbaud]	Occupied bandwidth [MHz]
16-QAM	17.017	21.216	5.304	6.0
64-QAM	26.741	31.824	5.304	6.0
256-QAM	36.465	42.432	5.304	6.0
16-QAM	22.305	27.808	6.952	8.0
64-QAM	35.050	41.712	6.952	8.0
256-QAM	47.795	55.616	6.952	8.0
16-QAM (HRM)	16.934*	21.216	5.304	6.0
64-QAM (HRM)	26.611*	31.824	5.304	6.0
256-QAM (HRM)	36.287*	42.432	5.304	6.0
16-QAM (HRM)	22.196*	27.808	6.952	8.0
64-QAM (HRM)	34.879*	41.712	6.952	8.0
256-QAM (HRM)	47.561*	55.616	6.952	8.0

(*) The data rate shown is the effective data rate excluding HRM. Actual bit rate of MPEG-2-TS is the same as for non-HRM, as HRM is inserted in the MPEG-2-TS multiplexing process and removed in the demultiplexing process.

7.10.1.15 Transmission Convergence Layer

The downstream TDM frame range is between 3 and 6 msec approximately. It means that, for example, a frame for 40 MHz bandwidth could be performed by 700 ATM cells or 175 MPEG-2 Packets.

7.10.2 Upstream MMDS

The upstream TDMA frame length is equal to the downstream TDM frame length (3 to 6 msec). At the Access node upstream receiver, the upstream frame shall have a fixed delay relative to the downstream frame. The STB shall adjust timing of upstream packet transmissions to coincide with the upstream frame slot boundaries at the Access node receiver, i.e., the STB shall achieve upstream symbol synchronization (with the Access node receiver) to a specified level of accuracy. There are two levels of upstream synchronization: (1) before net entry and (2) after net entry.

The maximum synchronization error before net entry is determined primarily by the STB uncertainty of two-way propagation delay, and the maximum uncertainty is determined by MMDS service cell radius. For STB net entry, Net management shall allocate multiple contiguous slots as needed to form longer net entry slots such that TDMA packet collisions caused by STB net entry transmissions are precluded. The net entry procedure shall provide for synchronization pull-in wherein the STB adjusts upstream time base in response to feedback of synchronization error estimated by the Access node. After net entry the STB upstream synchronization error shall be maintained at less than one upstream symbol in length (packet guard time is 2 symbols for QPSK and 3 symbols for 16 QAM). The Access node shall provide periodic feedback of estimated upstream synchronization error to assist the STB in maintaining the specified synchronization accuracy after net entry.

Copyright International Organization for Standardization
Provided by IHS under license with ISO
No reproduction or networking permitted without license from IHS Not for Resale

7.10.2.1 Transmission Convergence Layer

7.10.2.1.1 Time Slot Format for DQPSK Upstream Physical Medium Dependent Layer

The specified upstream time slot structure is shown in Figure 7.10-22. A slot is 68 bytes long, consisting of a preamble, one ATM cell, 10 Reed Solomon check bytes, and 1 byte of guard time for upstream synchronization error. The preamble shall be set to [00FCFCF3]hex and, unlike the other 64 bytes in the upstream time slot, the preamble shall not differentially encoded. This results in a preamble modulated on the carrier as a 16 symbol BPSK modulated Neuman-Hoffman sequence [0000 1110 1110 1101].
The one-byte guard time provides for upstream synchronization error after net entry. The preamble supports pull-in of upstream timing during net entry, as well as measurement of upstream timing error to support maintenance of upstream synchronization after net entry.

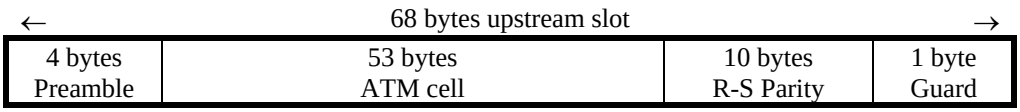

Figure 7.10-22 - Upstream Time Slot Structure

The upstream frame consists of F slots where F depends on the upstream modulation rate used. The F slots of a frame are partitioned into polling slots, contention slots, and traffic slots. The relative number of these three types of slots are dynamic at the discretion of the slot assignment functions, under the constraint that their total is F.
In the case of ATM transport, a downstream time slot consists of one ATM cell. The relationship of downstream time slots to upstream time slots must satisfy the following equation:

$$\frac{N_u \cdot 68 \cdot 8}{R_u \cdot 2} = \frac{N_D \cdot 204 \cdot 8 \cdot \frac{2}{7}}{R_D \cdot M}$$

where R_U is the upstream channel symbol rate, N_U is the number of upstream time slots (ATM cells), M is the number of bits per symbol in the downstream (=4 for 16QAM, 6 for 64 QAM, 8 for 256 QAM), and R_D is the downstream symbol rate into the Reed Solomon decoder, N_D is the number of downstream time slots (ATM cells).

Table 7-35: Example Downstream/Upstream Framing Relationship (ATM Case)

Downstream 64QAM, Trellis, 6 MHz Channel			Upstream QPSK		
Description		**Units**	**Description**		**Units**
Frame Period	6.042	ms	Frame Period	6.042	ms
Time Slots per Frame	378.0		Time Slots per Frame	81.00	
ATM Cell Rate	62563	cells/s	ATM Cell Rate	13406	cells/s
ATM Rate	26.527	Mbps	ATM Rate	5.684	Mbps
Time Slot Efficiency	371/376		Time Slot Efficiency	63/68	
Bit Rate	26.8840	Mbps	Bit Rate	6.1354	Mbps
Reed Solomon Efficiency	47/51		Reed Solomon Efficiency	53/63	
Reed Solomon Symbol Rate	29.17		Coded Symbol Rate	7.2930	Msps
Trellis Code Efficiency	11/12		R_{sd}/R_{su}	4	
Coded Symbol Rate	31.8240	Msps	QPSK Modulation	2	
64 QAM Modulation	6		Channel Symbol Rate	3.6465	Mbaud
Channel Symbol Rate	5.3040	Mbaud	Excess Bandwidth	1.3000	Hz/Baud
Excess Bandwidth	1.1300	Hz/Baud	Channel Bandwidth	4.7405	MHz
Channel Bandwidth	5.9935	MHz			

In the case of MPEG-2-TS transport, a downstream time slot consists of one MPEG-2-TS packet. The relationship of downstream time slots to upstream time slots must satisfy the following equation:

 © ISO/IEC 1999 - All rights reserved

Copyright International Organization for Standardization
Provided by IHS under license with ISO
No reproduction or networking permitted without license from IHS
Not for Resale

$$\frac{N_u \cdot 68 \cdot 8}{R_u \cdot 2} = \frac{N_D \cdot 204 \cdot 8}{R_D \cdot M}$$

where R_U is the upstream channel symbol rate, N_U is the number of upstream time slots (ATM cells), M is the number of bits per symbol in the downstream (=4 for 16QAM, 6 for 64 QAM, 8 for 256 QAM), and R_D is the downstream symbol rate into the Reed Solomon decoder, N_D is the number of downstream time slots (MPEG-2-TS packets).

Table 7-36: Example Downstream/Upstream Frame Relationship (MPEG-2-TS Case)

Downstream 64QAM, Trellis, 6 MHz Channel			Upstream QPSK		
Description		**Units**	**Description**		**Units**
Frame Period	6.042	ms	Frame Period	6.042	ms
Time Slots per Frame	108.0		Time Slots per Frame	81.00	
MPEG Packet Rate	17875	pkts/s	ATM Cell Rate	13406	cells/s
MPEG Bit Rate	26.884	Mbps	ATM Rate	5.684	Mbps
Time Slot Efficiency	1		Time Slot Efficiency	63/68	
Bit Rate	26.8840	Mbps	Bit Rate	6.1354	Mbps
Reed Solomon Efficiency	47/51		Reed Solomon Efficiency	53/63	
Reed Solomon Symbol Rate	29.17		Coded Symbol Rate	7.2930	Msps
Trellis Code Efficiency	11/12		R_{sd}/R_{su}	4	
Coded Symbol Rate	31.8240	Msps	QPSK Modulation	2	
64 QAM Modulation	6		Channel Symbol Rate	3.6465	Mbaud
Channel Symbol Rate	5.3040	Mbaud	Excess Bandwidth	1.3000	Hz/Baud
Excess Bandwidth	1.1300	Hz/Baud	Channel Bandwidth	4.7405	MHz
Channel Bandwidth	5.9935	MHz			

7.10.2.1.2 Time Slot Format for 16QAM Upstream Physical Medium Dependent Layer

Since subscriber transmit power is more cost effective at MMDS frequencies than LMDS frequencies, higher order modulation can be used to improve spectral efficiency, throughput, and capacity. Instead of a 68 byte time slot, the 16 QAM upstream will use a 76.5 byte time slot which consists of 8 bytes for preamble, 53 bytes for ATM cell, 14 bytes for Reed Solomon overhead, and 1.5 bytes of guard time. The preamble will use the same 16 symbol Neumann-Hoffman sequence which is represented by 8 bytes with 16 QAM modulation.

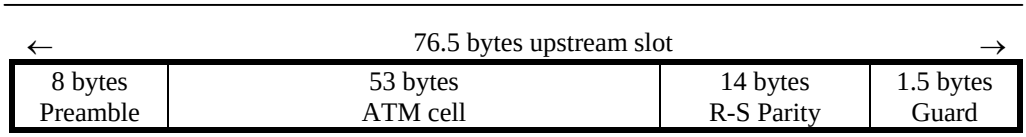

In the case of ATM transport, a downstream time slot consists of one ATM cell. The relationship of downstream time slots to upstream time slots must satisfy the following equation:

$$\frac{N_u \cdot 76.5 \cdot 8}{R_u \cdot 4} = \frac{N_D \cdot 204 \cdot 8 \cdot \frac{2}{7}}{R_D \cdot M}$$

where R_U is the upstream channel symbol rate, N_U is the number of upstream time slots (ATM cells), M is the number of bits per symbol in the downstream (=4 for 16QAM, 6 for 64 QAM, 8 for 256 QAM), and R_D is the downstream symbol rate into the Reed Solomon decoder, N_D is the number of downstream time slots (ATM cells).

Copyright International Organization for Standardization
Provided by IHS under license with ISO
No reproduction or networking permitted without license from IHS Not for Resale

Table 7-37: Example Downstream/Upstream Framing Relationship (ATM Case)

Downstream 64QAM, Trellis, 6 MHz Channel			Upstream 16 QAM		
Description		**Units**	**Description**		**Units**
Frame Period	6.042	ms	Frame Period	6.042	ms
Time Slots per Frame	378.0		Time Slots per Frame	36.00	
ATM Cell Rate	62563	cells/s	ATM Cell Rate	5958	cells/s
ATM Rate	26.527	Mbps	ATM Rate	2.526	Mbps
Time Slot Efficiency	371/376		Time Slot Efficiency	7/8	
Bit Rate	26.8840	Mbps	Bit Rate	2.8845	Mbps
Reed Solomon Efficiency	47/51		Reed Solomon Efficiency	53/67	
Reed Solomon Symbol Rate	29.17		Coded Symbol Rate	3.6465	Msps
Trellis Code Efficiency	11/12		R_{sd}/R_{su}	8	
Coded Symbol Rate	31.8240	Msps	16 QAM Modulation	4	
64 QAM Modulation	6		Channel Symbol Rate	0.9116	Mbaud
Channel Symbol Rate	5.3040	Mbaud	Excess Bandwidth	1.3000	Hz/Baud
Excess Bandwidth	1.1300	Hz/Baud	Channel Bandwidth	1.1851	MHz
Channel Bandwidth	5.9935	MHz			

In the case of MPEG-2-TS transport, a downstream time slot consists of one MPEG-2-TS packet. The relationship of downstream time slots to upstream time slots must satisfy the following equation:

$$\frac{N_u \cdot 76.5 \cdot 8}{R_u \cdot 4} = \frac{N_D \cdot 204 \cdot 8}{R_D \cdot M}$$

where R_U is the upstream channel symbol rate, N_U is the number of upstream time slots (ATM cells), M is the number of bits per symbol in the downstream (=4 for 16QAM, 6 for 64 QAM, 8 for 256 QAM), and R_D is the downstream symbol rate into the Reed Solomon decoder, N_D is the number of downstream time slots (MPEG-2-TS packets).

Table 7-38: Example Downstream/Upstream Frame Relationship (MPEG-2-TS Case)

Downstream 64QAM, Trellis, 6 MHz Channel			Upstream 16 QAM		
Description		**Units**	**Description**		**Units**
Frame Period	6.042	ms	Frame Period	6.042	ms
Time Slots per Frame	108.0		Time Slots per Frame	36.00	
MPEG Packet Rate	17875	pkts/s	ATM Cell Rate	5958	cells/s
MPEG Bit Rate	26.884	Mbps	ATM Rate	2.526	Mbps
Time Slot Efficiency	1		Time Slot Efficiency	7/8	
Bit Rate	26.8840	Mbps	Bit Rate	2.8845	Mbps
Reed Solomon Efficiency	47/51		Reed Solomon Efficiency	53/67	
Reed Solomon Symbol Rate	29.17		Coded Symbol Rate	3.6465	Msps
Trellis Code Efficiency	11/12		R_{sd}/R_{su}	8	
Coded Symbol Rate	31.8240	Msps	16 QAM Modulation	4	
64 QAM Modulation	6		Channel Symbol Rate	0.9116	Mbaud
Channel Symbol Rate	5.3040	Mbaud	Excess Bandwidth	1.3000	Hz/Baud
Excess Bandwidth	1.1300	Hz/Baud	Channel Bandwidth	1.1851	MHz
Channel Bandwidth	5.9935	MHz			

 © ISO/IEC 1999 - All rights reserved

Copyright International Organization for Standardization
Provided by IHS under license with ISO
No reproduction or networking permitted without license from IHS
Not for Resale

7.10.2.2 Physical Medium Dependent Sublayer

The coding and modulation of upstream packets is summarized in the block diagram in Figure 7.10-23.
The upstream ATM cell received from the transmission convergence layer shall be randomized for spectral shaping with a randomizer, and the randomized ATM cell shall be encoded for forward error correction by a Reed Solomon RS(63,53) code with 8-bit code symbols. The 4-byte or 8-byte sync preamble shall be appended to the ATM cell and the resultant coded packet is mapped into I/Q baseband pulses to effect differentially encoded QPSK or 16 QAM, respectively. The baseband modulation pulses shall be filtered with root-raised cosine filters having an excess bandwidth factor of $\alpha = 0.30$ and the packet data shall be burst modulated onto the upstream RF waveform into an assigned slot.
The preceding operations at the subscriber node for upstream transmission shall be reversed at the Access node end for reception of upstream burst transmissions.

Copyright International Organization for Standardization
Provided by IHS under license with ISO
No reproduction or networking permitted without license from IHS Not for Resale

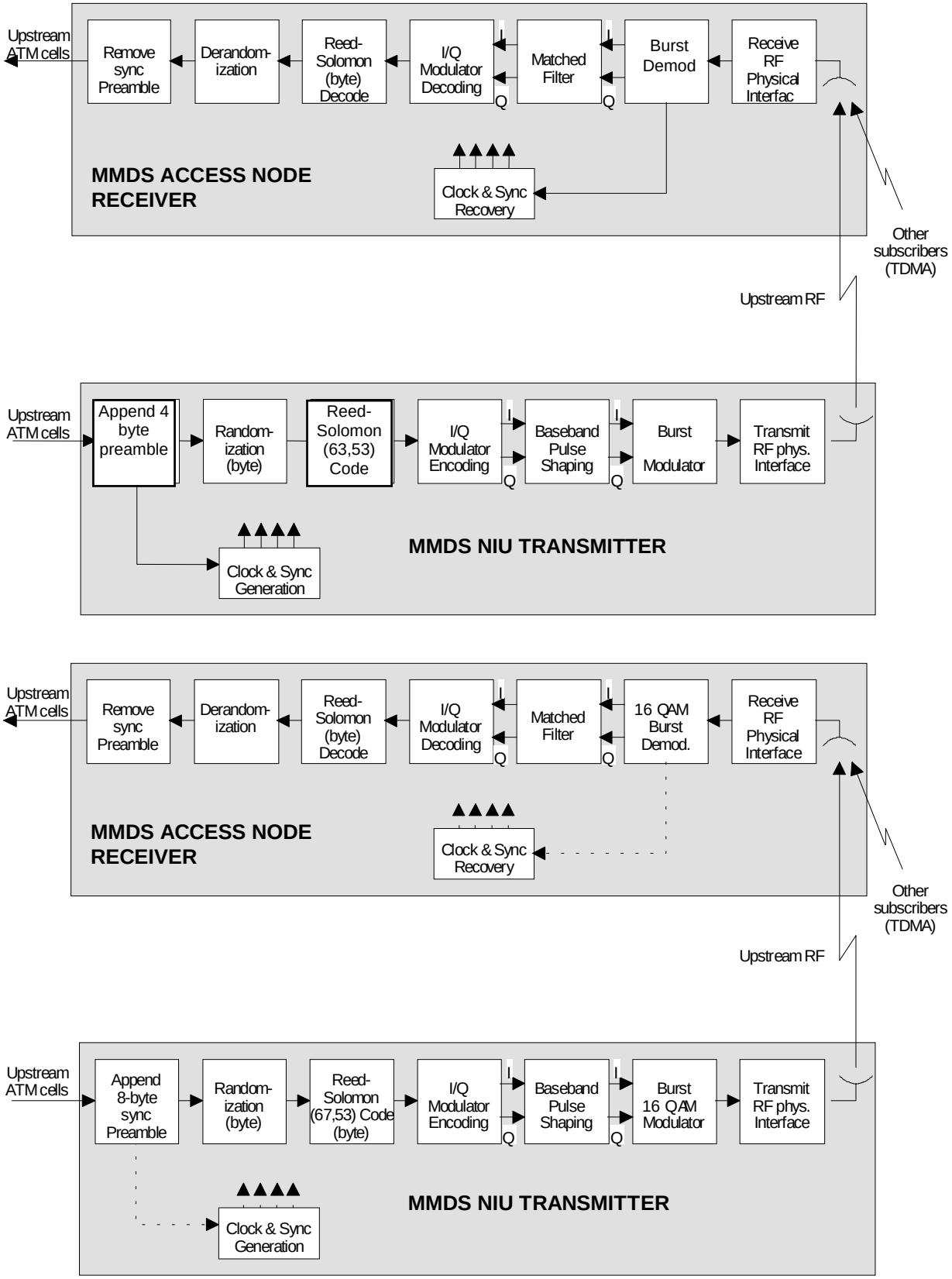

Figure 7.10-23 - Upstream Data Flow for QPSK (Upper Diagram) and 16 QAM (Lower Diagram)

7.10.2.2.1 Randomization for spectrum shaping

For the upstream packet, only the ATM cell of the packet shall be randomized. The randomizer shall be the linear feedback shift register (LFSR) with generating polynomial $x^6 + x^5 + 1$. The initial contents of the register shall be

 © ISO/IEC 1999 - All rights reserved

Copyright International Organization for Standardization
Provided by IHS under license with ISO
No reproduction or networking permitted without license from IHS
Not for Resale

all ones, and the LFSR shall be reset to initial condition at the beginning of each ATM cell. At the upstream receiver, the complementary self-synchronizing feed-forward linear shift register derandomizer shall be used.

7.10.2.2.2 Reed-Solomon coding

Reed Solomon coding shall be applied to each randomized ATM cell. For Grades A and B, the code shall be the shortened systematic Reed-Solomon code RS(63,53,t=5). The specified code generator polynomials are given by

Code Generator Polynomial: $g(x) = (x+\mu^0)(x+\mu^1)(x+\mu^2) \ldots (x+\mu^9)$, where μ= 02hex

Field Generator Polynomial: $p(x) = x^8 + x^4 + x^3 + x^2 + 1$

The specified code has a block length of 255 bytes, and shall be configured as a RS(255,245, t=5) code with information bits preceded by 192 zero symbols. The resultant code will correct t=5 byte errors in each code word.

For Grade C, the applied Reed Solomon code is specified to have stronger correction power than that for QPSK due to the increased signal to noise ratio required for 16 QAM modulation,. The code shall be the shortened systematic Reed-Solomon code RS(67,53,t=7). The specified code generator polynomials are given by

Code Generator Polynomial: $g(x) = (x+\mu^0)(x+\mu^1)(x+\mu^2) \ldots (x+\mu^{13})$, where μ= 02hex

Field Generator Polynomial: $p(x) = x^8 + x^4 + x^3 + x^2 + 1$

The specified code has a block length of 255 bytes, and shall be configured as a RS(255,241, t=7) code with information bits preceded by 188 zero symbols. The resultant code will correct t=7 byte errors in each code word.

7.10.2.2.3 Modulation

The specifications which shall apply to QPSK/16QAM modulation for the upstream channel are given in Table 7-39.

Table 7-39 - Specifications for Modulation (Upstream)

Modulation	Grade A and B: Differentially encoded QPSK Grade C: 16 QAM
Differential Encoding (Grade A and B	Bytes entering the byte-to-symbol encoder are divided into four bit pairs, each bit pair generating one QPSK symbol. Byte boundaries coincide with bit pair boundaries: that is, no bit pairs overlap two bytes. The bit pair corresponding to the MSBs of the byte is sent first. Within each bit pair, the more significant bit is referred to as 'A' and the less significant as 'B'. The differential encoder shall accept bits A,B in sequence and generate phase changes as follows: A B Phase Change 0 0 none 0 1 +90 degrees 1 1 180 degrees 1 0 -90 degrees
Preamble Grade A and B	The Preamble is four bytes: 00 FC FC F3 hex, transmitted in this order.
Preamble Grade C	The Preamble uses the same 16 symbol Neumann-Hoffman sequence mapped to 8 bytes in 16 QAM.
Signal Constellation Grade A and B	The outputs I, Q from the differential encoder map to the phase states as follows: 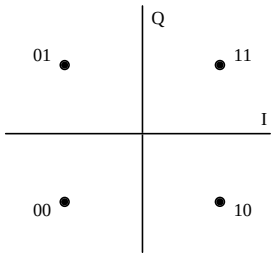 This constellation is used for the detection of the Preamble, which is not differentially encoded.
Signal Constellation Grade C	Same as in Section 7.10.1.10 for 16 QAM modulation and physical interface
Transmission Rates	Integer divisors of the downstream symbol rate into the Reed-Solomon decoder.

Copyright International Organization for Standardization
Provided by IHS under license with ISO
No reproduction or networking permitted without license from IHS Not for Resale

Transmit Filtering	Root raised cosine filtering, roll-off factor $\alpha = 0.30$
Data Randomization	The Preamble shall be sent in the clear. Before addition of the FEC bytes (to be calculated over the randomized ATM cell), randomization shall apply only to the 53-byte ATM cell, with the randomizer performing modulo-2 addition of the data with a pseudo-random sequence. The generating polynomial is $x^6 + x^5 + 1$ with seed all ones. FEC bytes shall be calculated over the randomized 53-byte ATM cell. Byte/serial conversion shall be MSB first. The 424-bit binary sequence generated by the shift register starts with 00000100… The first "0" is to be added to the first bit after the Preamble. Randomizer: 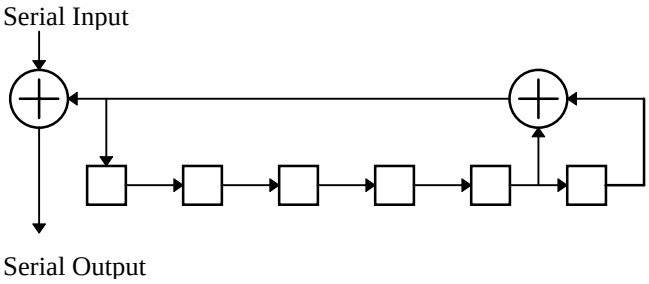 A complementary non self-synchronizing derandomizer is used in the receiver to recover the data. The derandomizer shall be enabled after detection of the Preamble. Derandomizer: 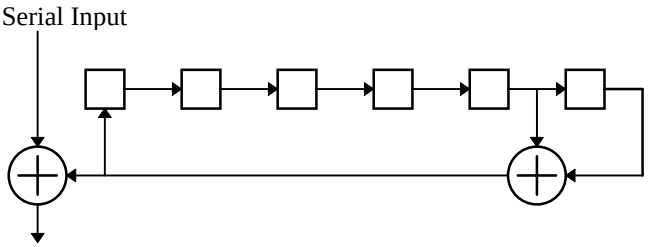
Frequency Range	Region Dependent (less than 10 GHz)
Frequency Resolution	≤ 500 Hz
Transmitter Power Spectral Mask	The Transmitter Power Spectral Mask shall comply to the values given in Table 7-40. The transmit filter when convolved with itself shall have a carrier to intersymbol interference ratio of greater than 30 dB.
Carrier Suppression	> 30 dB
I/Q Amplitude Imbalance	< 1 dB
I/Q Phase Imbalance	< 2.0 degrees

Table 7-40 - QPSK or 16 QAM Upstream Transmitter Power Spectrum Mask.

$\lvert (f - f_c) / f_N \rvert$	Response [dB]	Tolerance [dB]
≤ 1-α	0	± 0.25
at 1	-3	± 0.5
at 1+α	< -22	-
at 2-α	< -30	-
≥ 2	< -32	-

 © ISO/IEC 1999 - All rights reserved

Copyright International Organization for Standardization
Provided by IHS under license with ISO
No reproduction or networking permitted without license from IHS
Not for Resale

7.10.2.2.4 Specifications for the IF Interface

The Downstream Physical Interface applies to the intermediate frequency (IF) interface between the Radio Frequency Unit (RFU) and the UPI/STB as measured at the UPI/STB connector. Specifications for the Upstream Physical Interface is shown in Table 7-54 and applies to the same IF interface.

Table 7-41 - Specifications for the Physical Interface (Upstream)

Upstream Frequency	400 to 700 MHz The transmitter shall operate over the entire specified frequency range.
Upstream signal level	-40 to -10 dBm
Transmission mask (Rejection after burst transmission)	-30 dB below the nominal level after the guard interval -40 dB below the nominal level after a 10 packet length -50 dB below the nominal level after a 100 packet length -60 dB below the nominal level after a 1000 packet length
Channel Spacing	Nx100 kHz, N≥9
Channel Bandwidth	Grade A 1 - 2.5 MHz Grade B and C 1 - 26 MHz
Phase Noise	The phase noise shall not exceed the maximum levels shown in Table 7-42.
Frequency Resolution	≤ 500 Hz
DC power Note: this power must be supplied by the NIU and is not provided over the A0 interface.	18 – 24 Vdc, $Power_{Available}$ > 18 W (ON/OFF selectable)
Return Loss	≥ 13 dB (in-band)
Impedance	75 Ω
Physical Connector Type	F-type female

Table 7-42 - Maximum Phase Noise Levels

	QPSK Modulation		16 QAM Modulation	
Frequency Offset [kHz]	At RFU Input [dBc/Hz]	At UPI/STB Input [dBc/Hz]	At RFU Input [dBc/Hz]	At UPI/STB Input [dBc/Hz]
1	-51	-41	-57	-47
10	-81	-71	-87	-77
50	-99	-92	-105	-98
100	-99	-95	-105	-101
500	-109	-104	-115	-110
1000	-115	-110	-121	-117
2000	-121	-116	-127	-122

7.10.3 MAC Protocols and Scenarios

7.10.3.1 Introduction

This section describes the messages for establishing, maintaining, and managing the physical wireless media for communication between an AIU (Air Interface Unit) at the head-end access node and an NIU (Network Interface Unit) at the subscriber premises. Examples of scenarios such as an NIU entering the network or requesting more resources are given. The messages can be combined in a sequence that would create another scenario and, thus, the scenarios given are not to be interpreted as the only possible scenarios. However, the scenarios given show the sequence of messages that shall occur for the given scenarios. The messages given are the exact specification of the messages between the AIU and NIU across the A1 interface that may be transmitted as the MAC flow. Higher layer flows are not addressed here. Only the messages for set-up of the connections for carrying those higher layer flows are defined here.

The MAC flow is bi-directional supported by modems at the AIU and NIU. Messages may be sent downstream to the NIU or upstream to the AIU. In the case of ATM transport, both the downstream and upstream frames are divided into time slots that encapsulate exactly one ATM cell. In the case of MPEG-TS transport, the downstream

Copyright International Organization for Standardization
Provided by IHS under license with ISO
No reproduction or networking permitted without license from IHS Not for Resale

frame is divided into time slots that encapsulate one MPEG-TS packet and the upstream frame is divided into time slots which encapsulate one ATM cell. The modulators at the AIU transmit one or more downstream frequency channels. However, only one downstream frequency channel may be received by the NIU at any instance. The NIU may switch to a different downstream frequency channel, but this switch may require time on the order of many time slots. Likewise, the NIU is only capable of transmitting on one upstream frequency channel at an instance in time. However, the NIU may be capable of transmitting on one frequency channel for one time slot and transmit on a different frequency channel for the following time slot.
In the case of ATM transport the MAC flow uses ATM layer encapsulation for all messages. In the case of MPEG-TS transport, the MAC flow uses MPEG-TS packet encapsulation for all messages.

7.10.3.2 MAC Control Message Structure when Transmitting ATM Cells

The downstream MAC Control Message structure that is utilized when the downstream channel is carrying ATM cells is shown in Figure 7.10-24. With ATM transport, the Access node transmits a Frame_Start AAL5 PDU with VPI/VCI=0xFF/0xFFFF once per frame period MAC messages can also be sent on individual MAC VCs (0xFF/niu_id) to minimize processing by each NIU/STB. Note that the first cell of the Frame_Start PDU does not have to occur as the first cell of a two MUX packet sequence.

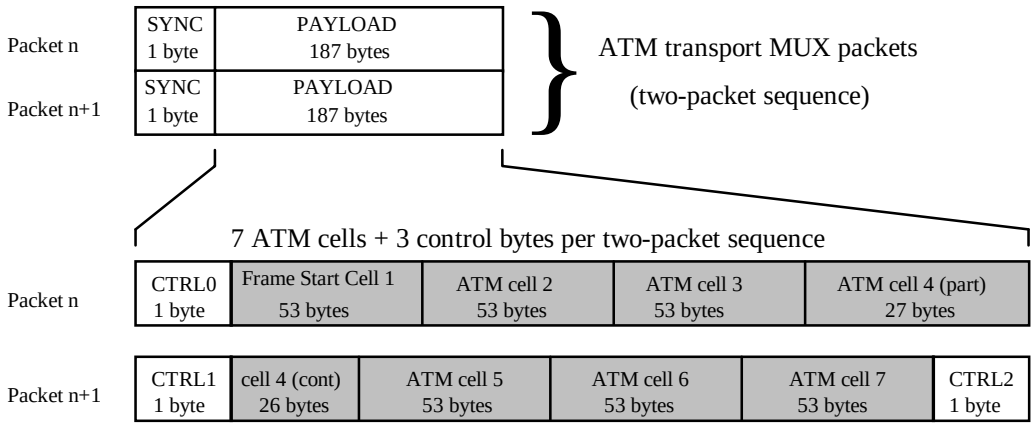

Figure 7.10-24 - Downstream MAC Control Message structure (ATM structure)

The protocol stack for ATM transport based systems is shown in Figure 7.10-25. Downstream MAC messages are reassembled out of MPEG-TS packets and processed in the NIU/STB. The MAC layer communicates through a Layer Management function to the Transmission Convergence layer to configure such items as the upstream reserved time slot allocation, etc. The MAC layer also communicates to the Physical Medium Dependent Layer to configure the upstream and downstream modulation and FEC parameters and to apply timing, frequency, and power corrections for upstream transmissions.

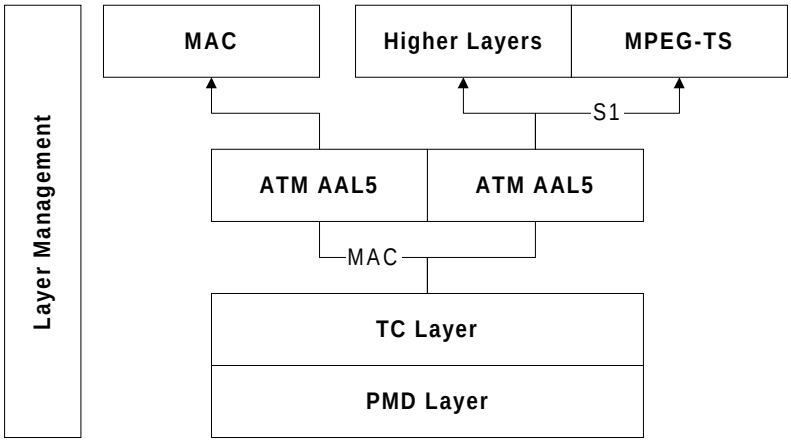

Figure 7.10-25: Downstream MAC Protocol Reference Model, ATM Transport

 © ISO/IEC 1999 - All rights reserved

--`,,```,,,,````-`-`,,`,,`,`,,`---
Copyright International Organization for Standardization
Provided by IHS under license with ISO
No reproduction or networking permitted without license from IHS
Not for Resale

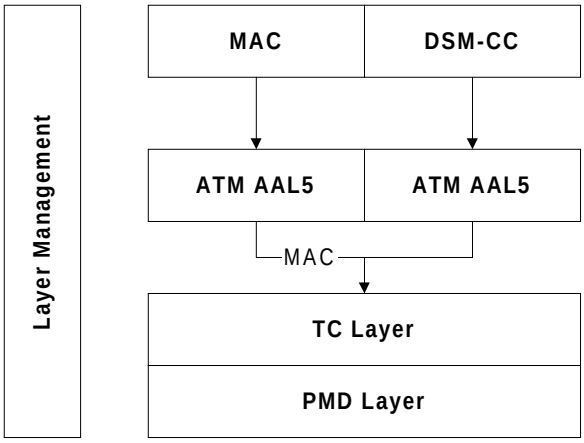

Figure 7.10-26: Upstream MAC Protocol Reference Model, ATM Transport

7.10.3.3 MAC Control Message Structure when Transmitting MPEG-TS Packets

In the case of an MPEG-TS based system, the MAC messages are carried in a MAC PID, designated by MPEG-2 stream_type 0xC0. MAC messages may span more than one MPEG packet in which case the NIU/STB processor must perform reassembly. Receipt of the first MAC MPEG packet MAC shall be used to synchronize the upstream frame. Because MAC messages will be inserted into the MPEG-TS by the final MPEG multiplexer stage, it cannot be guaranteed that the interarrival time between the first MAC packets of each frame will be constant. As a result, each MAC packet shall include a time stamp that will be inserted at the MAC Layer between the MPEG multiplexer and the modulator.
The MAC Control Message structure that is utilized when the downstream QAM channel is carrying MPEG-2-TS packets is shown in the following figure.

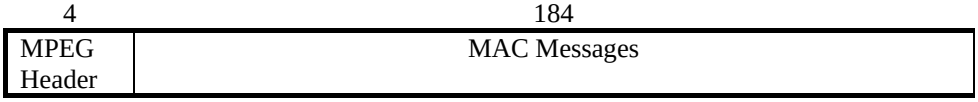

Figure 7.10-27 - MAC downstream message structure (MPEG-2 TS format)

MPEG Header is the 4 byte MPEG-2 Transport Stream Header as defined in ISO/IEC 13818-1 with a specific PID designated for MAC messages.
The protocol stack for MPEG-TS based systems is shown in Figure 7.10-28 and Figure 7.10-29. Downstream MAC messages are reassembled out of MPEG-TS packets and processed in the NIU/STB. The MAC layer communicates through a Layer Management function to the Transmission Convergence layer to configure such items as the upstream reserved time slot allocation, etc. The MAC layer also communicates to the Physical Medium Dependent Layer to configure the upstream and downstream modulation and FEC parameters and to apply timing, frequency, and power corrections for upstream transmissions.

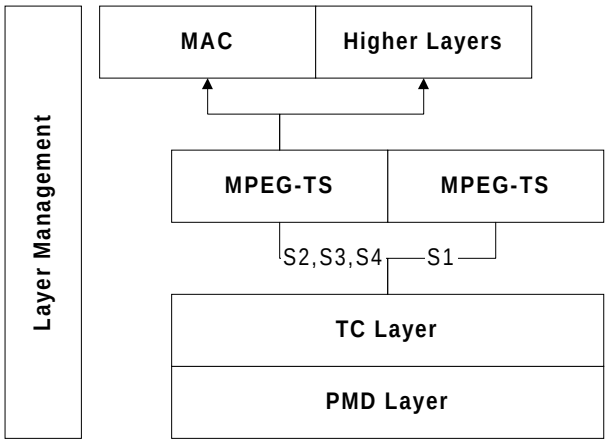

Figure 7.10-28: Downstream MAC Protocol Reference Model, MPEG-TS Transport

Copyright International Organization for Standardization
Provided by IHS under license with ISO
No reproduction or networking permitted without license from IHS Not for Resale

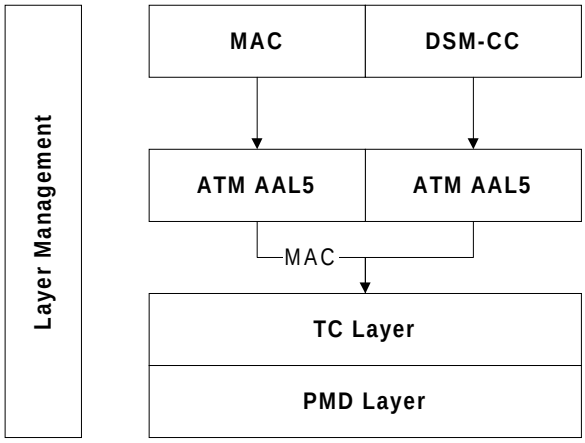

Figure 7.10-29: Upstream MAC Protocol Reference Model, ATM Transport

7.10.3.4 Time Slot Types

7.10.3.4.1 ATM Transport

The downstream scheme is time division multiplex and the time slot types are divided into frame start slots and random access slots. The upstream scheme is Time Division Multiple Access and the time slot types are divided into polling response slots, contention slots, and reserved time slots. All MAC messages shall be encapsulated within ATM cells that shall use the UNI cell header format. The AIU shall not send more than 7 percent of the frame, which is about 50 cells per 6msec frame for a downstream bit rate of 51 Mbit/s, encapsulating MAC PDUs to any one NIU in order to set a limit on the amount of processing required by the NIU/STB. These cells, which contain MAC PDUs, include those broadcast via frame start to all NIUs and cells directed to a specific NIU. The poll [P] time slots sent from the NIU only contain MAC messages. The contention [C] time slots sent from the NIU may carry MAC messages or higher layer data. Reserved time slots sent from the NIU carry voice/data, ATM cells and OAM control message cells. Since the random access time slots downstream and the reserved time slots upstream shall transport higher layer data over an ATM virtual connection, these time slots are referenced as [NIU].

7.10.3.4.2 MPEG-TS Transport

For an MPEG-TS based system, the random access time slots carry PES information in MPEG-TS packets. The MAC messages sent to a specific NIU utilize an niu_id in the header for each 48 byte message. The 48 byte messages are encapsulated within the payload of the MPEG-TS MAC packet. The AIU shall not send more than 7 percent of the frame which is about 14 MPEG-TS packets at a downstream bit rate of 51 Mbit/s.

7.10.3.4.3 Acronyms

FS: Frame Start Time Slot or Frame Start MAC message
FS.P: Polling Request Type with Non-zero Poll_slot_id
C: Contention Time Slot
P: Poll Response Time Slot
NIU: Virtual Channel (Asynchronous)

7.10.3.4.4 Downstream Time Slots

Frame Start Time Slot
In ATM-based systems, the first frame start time slot [FS] always occurs on the first time slot in the downstream frame in order that the NIU may determine the beginning of the downstream frame and synchronize its upstream frame to it. This time slot always encapsulates the first cell of a single or multi-cell AAL5 SDU. The AAL5 SDU is referenced as FS. The VPI/VCI of the FS is always 0xFF/0xFFFF to flag that the SDU is the frame start. An AAL5 SDU with the VPI/VCI of frame start shall only occur once in a frame as the first AAL5 SDU in the frame. For MPEG-TS based systems, the MPEG multiplexer will, in general, not guarantee that the interarrival period between Frame_Start messages. As a result, a time stamp must be added to indicate the delay to the beginning of the next upstream frame. This is the purpose of **upstream_frame_delay** which is a 32 bit unsigned field. On

 © ISO/IEC 1999 - All rights reserved

--`,,```,,,,````-`-`,,`,,`,`,,`---
Copyright International Organization for Standardization
Provided by IHS under license with ISO
No reproduction or networking permitted without license from IHS
Not for Resale

receipt of the first packet of a Frame_Start on the MAC PID, the NIU starts a timer which counts downstream symbol clocks on the Reed-Solomon decoder output. The upstream_frame_delay represents the terminal count value for this value. In MPEG-TS based systems, it is anticipated that the value for the **upstream_frame_delay** will be overwritten by the downstream TC layer which will be inline between the MPEG multiplexer and the modulator and will snoop for the first MPEG-TS packet with a MAC PID. For ATM-based systems, use of the **upstream_frame_delay** field is optional. If unused, it will be set to a value of zero.
A non-zero poll_slot_id flags that an NIU is being polled and should respond in a polling response time slot [P]. The niu_id field in the message identifies which NIU is being polled. Often, one of the polling request messages is a status_request message. Following the polling request messages, the AIU typically sends a feedback message providing feedback to the NIU that is designated by the niu_id in the message. The polling requests are referred to as FS.P. The AIU may fill the remaining bytes of the frame start with any MAC message, but shall adhere to the following limitations. MAC PDUs to be transmitted on downstream frame n which is designated by frame start frame number n, shall be transmitted to the NIU no later than the first 7 percent of frame n+1. (See time slot allocation messages.) In order to still be able to assign time slots synchronous to the downstream frame start, the MAC messages must be able to designate time slots synchronous to the frame start. Thus, the first field in each frame start shall be an 8-bit **frame_num** which shall be referenced by synchronous time slot allocation messages. Since the absolute frame number is not specified in the polling request, and the polling response time slot allocation must be synchronous, all polling requests shall be in the frame start PDU.

Frame_Start() [FS] {	Bits	Bytes	Bit Number / Description
upstream_frame_delay	**32**	**4**	Delay from downstream frame to upstream frame in units of downstream symbols.
frame_num	**8**	**1**	0-255
MAC_message()			
}			

7.10.3.4.5 Random Access Time Slots

The random access slots [NIU] are all the time slots in the downstream frame except the frame start time slots. This is all the downstream time slots except the first time slots in the frame. The AIU may transmit on any of these time slots whenever it has any cells that need to be transmitted to an NIU. The cells may be OAM cells or part of an adaptation layer SDU, e.g. AAL5. The random access slots are referenced by the symbol NIU because they are utilized in a more true ATM sense rather than being synchronous or semi-synchronous due to physical layer constraints because these are the only downstream time slots on which higher layer cells may be transmitted on a virtual connection.

Downstream Frame

The following figure illustrates the downstream frame with N time slots per frame. The frame start time slots always start in the first time slot. All other time slots in the frame are available for the AIU to transport time division multiplexed virtual connection.

Slot #	AIU
1	[FS]
2	[NIU]
3	[NIU]
.	.
.	.
.	.
N	[NIU]

7.10.3.4.6 Upstream Time Slots

Poll Time Slots

The poll time slots [P] are the time slots in the upstream frame that are allocated to only one or many NIU, but may only be utilized for a poll response after receiving a poll request from the AIU. The poll time slots may only encapsulate a single-cell AAL5 SDU whose payload shall only be MAC messages defined in this document. The VPI/VCI is always0xFF/niu_id.

Copyright International Organization for Standardization
Provided by IHS under license with ISO
No reproduction or networking permitted without license from IHS Not for Resale

Contention Time Slots
The contention time slots [C] are the time slots in the upstream frame that may be allocated to more than one NIU and, thus, utilizing the contention time slot may cause a collision with another NIU utilizing the same contention time slot. If a collision occurs, then the contention must be resolved via any number of well-known algorithms implemented in the NIU, such as random retransmission delays based on the niu_id, to determine how many frames the NIU shall wait before retransmission. The contention time slots may encapsulate a single-cell AAL5 SDU whose PDU may be MAC messages defined in this document, a single-cell AAL5 SDU consisting of higher layer data, or a cell of a multi-cell AAL5 SDU consisting of higher layer data. The NIU shall always use VPI/VCI 0xFF/niu_id for transmission of a MAC message PDUs and the VPI/VCI of the higher layer data on contention time slots.
Reserved Time Slots
The reserved time slots [NIU] are the time slots in the upstream frame that are allocated to only one NIU, i.e. they are reserved for use by one NIU. The NIU may transmit on any of these time slots whenever it has any cells that need to be transmitted to the AIU or across the A4 interface via the AIU. The cells may be OAM cells or part of an adaptation layer SDU, e.g. AAL5. The reserved time slots are referenced by the symbol NIU because they are utilized in a more true ATM sense rather than being synchronous or semi-synchronous due to physical layer constraints.

7.10.3.5 Message Structure and Message Types

The MAC messages all utilize the same basic structure as outlined below. Every message consists of the fields: niu_id, msg_length, poll_slot_id, msg_type, num_msg_items, and a list of the msg_items. Each message item table in this document describes the fields for the message items of the type designated by one of the message types in the message type table. The message header, i.e. the niu_id, msg_length, poll_slot_id, msg_type, and num_msg_items is not shown in these tables. Only one instance of the fields for a single item in the msg_items field of the message is given in each message item table. If in the message header the number of message items is greater than one, the message will contains more than one instance of the message item. All message fields are unsigned unless otherwise stated. The type of each field is sufficiently defined by the following message item tables in this document.

MAC_message () {	Bits	Bytes	Bit Number / Description
niu_id	**16**	**2**	
msg_length	**16**	**2**	
poll_slot_id	**8**	**1**	Designates poll response slot.
msg_type	**8**	**1**	Identifies the message type
num_msg_items	**8**	**1**	# of message items being sent
msg_items		**N**	Variable Length Field
}			

The **niu_id** is a unique identifier of a specific NIU in the polling list of NIUs for a group of downstream and corresponding group of upstream frequency channels on which the NIU may receive and transmit, respectively. An niu_id = 0xFFFF is used to indicate all NIUs, i.e. it is the “multi-cast” ID. In the case of ATM, the VC header may direct this message to only one NIU or may broadcast the message. In the case of MPEG-TS the broadcast/niu header directs this message to a specific NIU or broadcasts using niu_id=0xFFFF.
The **msg_length** indicates the number of bytes following the msg_length field in this message. This field makes it easier for an NIU to find the second message in the cell or AAL5 SDU. Note that the first message may be for one NIU, whereas the second message may be for a different NIU.
The **poll_slot_id** indicates which of the allocated polling response time slots shall be utilized on the upstream frame that is designated by the synchronous_time_slot_delay. A value of 0 indicates that the NIU is not being polled by this message, and this message is not enabling use of any of the polling response time slots.
The **msg_type** is one of the messages in the msg_type table.
The **num_msgs_items** is the number of items of the designated message type that are in the given instantiation of the message.
The **msg_items** is the list of items of the type designated by the msg_type.
The following message type table lists the types of MAC messages in the order that they shall be enumerated (reservation_request is coded as msg_type = 0). Any message types added to this table in the future must be added at the end of the enumeration list to assure backwards compatibility. In the message type table, the slot type indicates the type of time slot in which the message of that type would most likely be encapsulated.

 © ISO/IEC 1999 - All rights reserved

Copyright International Organization for Standardization
Provided by IHS under license with ISO
No reproduction or networking permitted without license from IHS Not for Resale

MAC_message_type	Slot Type	Delivery	Description
reservation_request	[C]	AIU←NIU/STB	NIU request for reserved time slots.
reserved_slot_allocation	[FS,NIU]	AIU→NIU/STB	Allocation/deallocation of reserved time slots.
contention_slot_allocation	[FS,NIU]	AIU→NIU/STB	Allocation/deallocation of contention time slots.
poll_slot_allocation	[FS,NIU]	AIU→NIU/STB	Allocation/deallocation of poll time slots.
sign_on_request	[FS]	AIU→NIU/STB	Parameters for an NIU to enter the network.
tx_calibration	[FS,NIU]	AIU→NIU/STB	NIU transmit freq, power, time corrections.
status_request	[FS,NIU]	AIU→NIU/STB	Request specified NIU status items.
status_response	[P]	AIU←NIU/STB	Requested NIU status items.
mac_session_request	[C]	AIU←NIU/STB	NIU request a session/control connection.
mac_session_connection	[FS,NIU]	AIU→NIU/STB	AIU assigns VPI/VCI for session connection.
mac_session_release	[FS,NIU]	AIU↔NIU/STB	AIU or NIU releases a session connection.
mac_session_msg_ack	[FS,NIU, C,P]	AIU↔NIU/STB	Acknowledgment of receipt of the 3 above msgs.
new_downstream_channel	[FS,NIU]	AIU→NIU/STB	Command NIU to enter net on new channel.
contention_slot_feedback	[FS]	AIU→NIU/STB	Contention slot stabilization feedback.

7.10.3.6 Idle Cell

The NIU shall transmit on every reserved time slot. If no data is available, an idle shall be transmitted. The AIU may deallocate reserved time slots for an NIU that is not utilizing the reserved time slots for data. The idle cells may be used to determine upstream transmit signal calibration corrections, upstream BER, reserved time slot utilization, and NIU acknowledgment of reserved time slot allocation/deallocation.

Copyright International Organization for Standardization
Provided by IHS under license with ISO
No reproduction or networking permitted without license from IHS Not for Resale

7.10.3.7 Upstream Time Slot Allocation

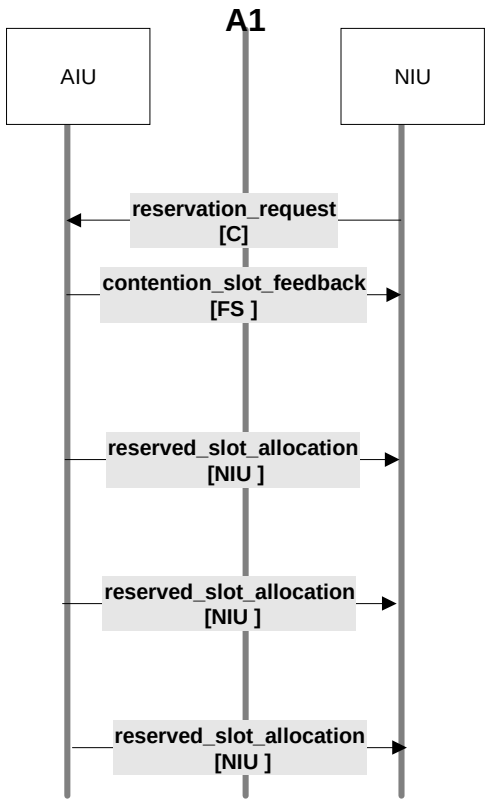

Figure 7.10-30 - Upstream Time Slot Allocation

The MAC upstream time slot allocation scenario depicts how reserved, contention, and polled time slots for transmitting upstream from the NIU are allocated and deallocated. The only difference in the scenario for each of the different type of time slots is that reserved time slots may be requested by the NIU, and the contention_slot_feedback message would serve to acknowledge the request. The contention and polled time slots are never requested by the NIU. The AIU decides which upstream frequency channels and time slots of those channels should be allocated to each NIU as a contention or polled time slot. The reserved time slot allocation differs from the contention and polled time slot allocation in that the NIU may request reserved time slots. However, the reserved times slots, like the contention and polled time slots, may be allocated by the AIU without a request from the NIU. The time slot allocation messages may be sent as an update of a previously sent message rather than a change of allocation. This is shown in the scenario. The three types of time slot allocation messages are also similar in structure. Each is designated by a different message type but the fields are identical.

reservation_request

`reservation_request () {`	Bits	Bytes	Bit Number / Description
`num_time_slots`	**8**	**1**	
`min_VBR_packet_size`	**16**	**2**	
`}`			

The **num_time_slots** indicates the number of reserved time slots requested by the NIU for user traffic. The AIU decides how many reserved time slots to allocate to the NIU. If the NIU still needs more reserved time slots, it will send another reserved slot request to the AIU. The NIU may send in this message the number of time slots that it believes that it needs or always set the num_time_slots field to 1.
The **min_VBR_packet_size** is the number of cells that are buffered at the NIU awaiting upstream transmission. Note that a cell in this case is considered to be 48-bytes.

 © ISO/IEC 1999 - All rights reserved

--`,,```,,,,````-`-`,,`,,`,`,,`---
Copyright International Organization for Standardization
Provided by IHS under license with ISO
No reproduction or networking permitted without license from IHS
Not for Resale

reserved_slot_allocation

reserved_slot_allocation () {	Bits	Bytes	Bit Number / Description
time_slot_allocation ()			
}			

The reserved_slot_allocation message changes or updates the allocation of upstream reserved time slots for an NIU. The reserved time slots are the time slots typically used for higher layer user traffic. The NIU shall transmit an idle message cell on every reserved time slot for which the NIU does not have any data ready to transmit. After the NIU is initially calibrated and is allocated reserved time slots, the calibration correction parameters for the signal transmitted upstream from the NIU may be determined from the receipt of the reserved time slots.

contention_slot_allocation

contention_slot_allocation () {	Bits	Bytes	Bit Number / Description
time_slot_allocation ()			
}			

The contention_slot_allocation message changes or updates the allocation of upstream contention time slots for an NIU. Contention time slots may be used for user traffic. If upstream traffic is mostly bursty data traffic, then contention time slot demand for time slot requests may be high. In order to stabilize the contention time slot retransmission algorithm, the AIU must send a contention_slot_feedback message in every frame start that indicates the usage of the allocated contention time slots.

poll_slot_allocation

poll_slot_allocation () {	Bits	Bytes	Bit Number / Description
poll_slot_id	**8**	**1**	Designates poll response slot.
time_slot_allocation ()			
}			

The poll_slot_allocation message changes or updates the allocation of upstream polling response time slots for an NIU. Guard time slots are not allocated in the poll time slot allocation.
The **poll_slot_id** indicates which of the allocated polling response time slots shall be utilized on the upstream frame that is designated by the synchronous_time_slot_delay. A value of 0 indicates that the NIU is not being polled by this message, and this message is not enabling use of any of the polling response time slots. The synchronous_time_slot_delay is the number of upstream frames that the poll response shall be delayed. See the sign_on_request message for a description of the synchronous_time_slot_delay. For each new polling response time slot that is allocated via a downstream channel, a poll_slot_id shall be assigned by the AIU and indicated in the poll_slot_id field of this message. A poll_slot_id shall not be duplicated for slots on different upstream channel which are allocated via the same downstream channel. The poll_slot_id must be unique for all upstream time slots associated with a given downstream channel.

time_slot_allocation

time_slot_allocation () {	Bits	Bytes	Bit Number / Description
upstream_frequency	**16**	**2**	in steps of 100 kHz
frame_num	**8**	**1**	
time_slot_page	**8**	**1**	
num_frames	**8**	**1**	
change_field		**1**	
Reserved	7		7..1
is_change	1		0:{update, change}
num_time_slots	**8**	**1**	
for (i=0;i<num_time_slots;i++) {			
time_slot_number	**8**	**1**	allocate/deallocate indication
}			
}			

The time_slot_allocation field is common to all time slot allocation messages. A time_slot_allocation type message may be used to change or to update the allocation of any type of upstream time slots for an NIU. Each time slot is referenced by frequency channel and time slot page such that a single time slot is a single element in a 2-dimensional array.
The **upstream_frequency** designates the upstream at the NIU IF output in 100kHz steps.

Copyright International Organization for Standardization
Provided by IHS under license with ISO
No reproduction or networking permitted without license from IHS Not for Resale

The **frame_num** is an 8-bit unsigned integer that indicates the first frame in which the time slot is being allocated. There shall be a limitation that time slot allocation messages sent on downstream frame n can only be allocating time slots for upstream frames n+1 or later, where upstream frame n is delayed from downstream frame n. Furthermore, the polling response time slot still may not be used until a polling request is received and the synchronous_time_slot_delay should still be used to determine in which frame the polling response time slot may be used by the NIU. For clarification, since the absolute frame number is not specified in the polling request, and the polling response time slot allocation must be synchronous, all polling requests must be in the frame start PDU.
The **time_slot_page** is an 8-bit unsigned integer designating the group of 128 time slots where 0 indicates time slots 0 through 127, 1 indicates time slots 128 through 255, etc.
The **num_frames** is an 8-bit unsigned integer indicating the number of upstream frames for which the NIU is allocated the time slots in the subsequent time slot list. This is set to 0 to mean that the time slots are being allocated indefinitely. The first time slot is in the frame designated during sign-on as the synchronous_time_slot_delay.
The **is_change** bit is a boolean indicating whether this message is allocating or deallocating time slots on the stated page of the frequency channel or is only an update which lists the time slots that are currently allocated for the NIU. The boolean is cleared for update, set for change.
The **num_time_slots** is an 8 bit unsigned integer indicating the number of time slots (from 0 to 127) that are in the following list for the channel and page.
The **time_slot_number** is an 8-bit signed integer that correspond to a time slot on the page. The first time slot is referred to as 0, and the last time slot on the page is referred to as 127. If the time slot number is positive (i.e. the MSB is cleared), then the time slot is allocated. If the time slot number is negative (i.e. the MSB is set), then the time slot is deallocated.

Example Upstream Time Slot Allocation
The following figure illustrates two consecutive upstream frames with ten time slots per frame. In this example, assume that the three NIUs transmit on only one upstream frequency channel and that the channel is the same for all three. A possible allocation of the three types of upstream time slots at an instant in time is shown. The polling response time slot is slot number one for all three NIUs. In this case, time slots 2 and 3 are not allocated and, thus, can be guard time slots. That is, if NIU #1 transmits late and actually the polling response is received at the AIU during time slot number 2, then the polling response does not interfere with any time slots allocated to other NIUs. Also, note that NIU #4 has not entered the network yet and, thus, has not yet been allocated any time slots other than the polling response time slot that is to be used for network entry.

Table 7-43 - Example Upstream Time Slot Allocation

slot #	NIU #1	NIU #2	NIU #3	NIU #4
1	[P]	[P]	[P]	[P]
2				
3				
4	[C]	[C]	[C]	
5			[C]	
6		[C]	[C]	
7			[NIU]	
8		[NIU]		
9			[NIU]	
10			[NIU]	
1	[P]	[P]	[P]	[P]
2				
3				
4	[C]	[C]	[C]	
5			[C]	
6		[C]	[C]	
7			[NIU]	
8		[NIU]		
9			[NIU]	
10			[NIU]	

 © ISO/IEC 1999 - All rights reserved

--`,,```,,,,````-`-`,,`,,`,`,,`---
Copyright International Organization for Standardization
Provided by IHS under license with ISO
No reproduction or networking permitted without license from IHS
Not for Resale

7.10.3.8 Polling Handshake

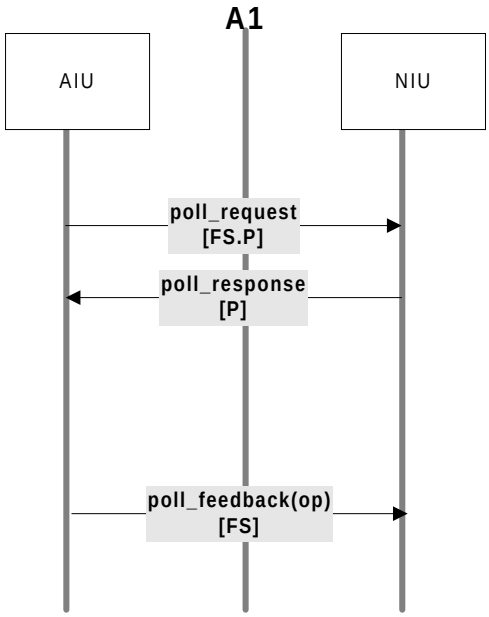

Figure 7.10-31 - Polling Handshake

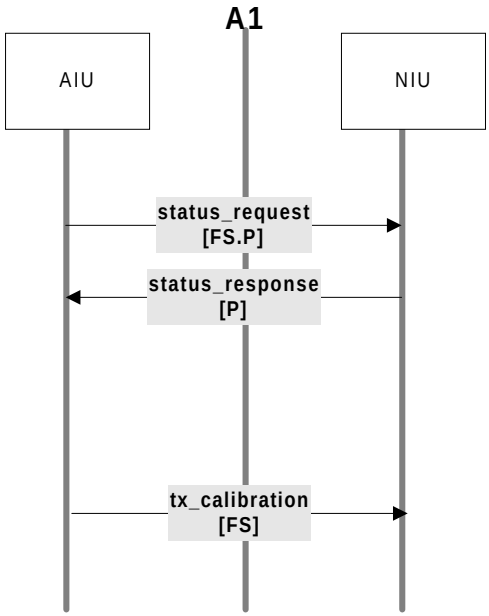

Figure 7.10-32 - Polling Handshake-Upstream Signal Calibration

The NIU shall be polled periodically to establish communication and maintain communication with the NIU. If no other messages are flowing from the AIU to the NIU, the AIU shall poll each NIU assigned to that AIU at an interval of less than or equal to 2 seconds. This is for proper upstream transmit signal calibration and to facilitate network entry both before the NIU has determined which downstream frequency is polling it and while waiting for configuration. The polling handshake is initiated by the AIU with a poll_request which shall be designated by the poll_slot_id field in the message header set to a non-zero value. The NIU responds on the upstream polling time slot that is referenced by the poll_slot_id in the message header and the AIU has allocated to the NIU. If the most recent poll request from the AIU does not include a poll_slots_allocation message in the frame, the NIU

Copyright International Organization for Standardization
Provided by IHS under license with ISO
No reproduction or networking permitted without license from IHS Not for Resale

shall assume that the time slots allocated for the polling response are the same as indicated in the previous poll_slots_allocation messages that it received from the AIU. If more than one time slot in a frame period is allocated for polling, the NIU shall respond on the time slot that is referenced by the poll_slot_id. If the NIU is not aligned in time, the NIUs response may be received at the AIU during the time slots following the desired polling response time slot. Guard time slots must not be allocated by the AIU as reserved, contention or poll time slot for any NIU if the current NIU being polled is not time aligned. Only 1 polling time slot may need to be allocated otherwise. The guard time slots must follow the poll time slot. Also, the NIU must attempt to respond on the first time slot in order to do timing calculations. Polling of the NIUs that have not been calibrated, i.e. are entering the net, should be done consecutively so that the head-end can allocate the guard time slots for contention usage for the longest amount of time. The polling handshake may include a third message referred as poll_feedback. The poll_response may be a status_response message. Tx_calibration is a type of message that may be included as poll_feedback.

If the NIU/STB loses power, it may remember the assigned niu_id and resources, i.e. connections and time slots. If the NIU remembers its niu_id, it responds to messages from the AIU using that niu_id. Otherwise, the NIU must wait to receive a sign_on_request message. If the NIU does not remember its allocated resources, then it must not remember its niu_id, so that the lack of response to the niu_id indicates to the AIU that the resources allocated to the NIU are no longer valid for that NIU and should be released. The AIU shall declare that the NIU is not responding if the AIU has not received a response to a polling request for 10 seconds. Note that this assumes that the AIU is polling the NIU a minimum of every 2 seconds as stated in this document. If the lack of NIU response or lack of receipt of the response at the AIU is due to a temporary loss of communication versus a more catastrophic loss of power, then this 10 seconds interval accommodates most periods of communication loss. If, however, a communication loss is sustained for a period longer than 10 seconds, then the AIU shall transmit a sign_on_request message to the NIU with a different niu_id. The association of a new niu_id with the serial number in the sign_on_request message indicates to the NIU that the AIU has lost communication with the NIU and, thus, that the AIU has released the allocated resources for that NIU, and the NIU shall release its allocated resources. The AIU shall not transmit a new niu_id for an NIU via the sign_on_request message unless the AIU is releasing all the resources allocated for that NIU. For every new niu_id, the NIU shall perform the network entry process again. During a temporary communication loss, the NIU is not calibrated on the specified interval. Therefore, when communication is reestablished, the NIU may be unsatisfactorily calibrated such that the AIU must account for this.

The figure below shows that many more downstream cells are transmitted for every upstream cell. The first downstream frame start cell is indicated by the shaded time slot. To the left of the downstream frame is an indication of which NIU is polled in the downstream frame start. Refer to the allocation of upstream time slots in the *Example Upstream Time Slot Allocation* in the *Time Slot Allocation* section of this document. The allocation of time slots in the allocation example is assumed in this example. Note that NIU #4 has not entered the network yet and, thus, its upstream transmit signal has not yet been calibrated. Thus, the polling response from NIU #4 is received on later time slots at the AIU than is allocated for NIU #4's polling response time slot. Also, note that the polling response by the NIUs are delayed by one upstream frame after the polling request is received. Furthermore, the upstream frame is received with an offset delay due to a constant path length difference between NIUs. So long as that difference is a constant, and does not vary between NIUs that may access the same upstream frame or frames, then this offset has no impact other than a delay.

 © ISO/IEC 1999 - All rights reserved

Copyright International Organization for Standardization
Provided by IHS under license with ISO
No reproduction or networking permitted without license from IHS
Not for Resale

Table 7-44 - Example Polling Response Frame Delay

Downstream		Upstream slot #	
[FS] Poll NIU#1		5	NIU #3 [C]
		6	NIU #1 [C]
		7	NIU #3 [NIU]
		8	NIU #2 [NIU]
		9	NIU #3 [NIU]
		10	NIU #3 [NIU]
		1	[P]
		2	
		3	
		4	
[FS] Poll NIU #2		5	
		6	
		7	NIU #3 [NIU]
		8	NIU #2 [NIU]
		9	NIU #3 [NIU]
		10	NIU #3 [NIU]
		1	NIU #1 [P]
		2	
		3	
		4	NIU #3 [C]
[FS] Poll NIU #3		5	
		6	NIU #2 [C]
		7	NIU #3 [NIU]
		8	NIU #2 [NIU]
		9	NIU #3 [NIU]
		10	NIU #3 [NIU]
		1	NIU #2 [P]
		2	
		3	
		4	NIU #1 [C]
[FS] Poll NIU #4		5	
		6	
		7	NIU #3 [NIU]
		8	NIU #2 [NIU]
		9	NIU #3 [NIU]
		10	NIU #3 [NIU]
		1	NIU #3 [P]
		2	
		3	
		4	NIU #1,2 [C]
[FS] Poll NIU #1		5	NIU #3 [C]
		6	NIU #1 [C]
		7	NIU #3 [NIU]
		8	NIU #2 [NIU]
		9	NIU #3 [NIU]
		10	NIU #3 [NIU]
		1	
		2	NIU #4 [P]
		3	
		4	
[FS] Poll NIU #2		5	
		6	
		7	NIU #3 [NIU]
		8	NIU #2 [NIU]

--`,,```,,,,````-`-`,,`,,`,`,,`---

Copyright International Organization for Standardization
Provided by IHS under license with ISO
No reproduction or networking permitted without license from IHS Not for Resale

status_request

status_request () {	Bits	Bytes	Bit Number / Description
}			

This is for requesting status items from the NIU via the MAC protocol for status and control of the LDMS medium.

status_response

status_response() {	Bits	Bytes	Bit Number / Description
niu_tx_LO_offset	**8**	**1**	in steps of 1 kHz
niu_rx_LO_offset	**8**	**1**	in steps of 1 kHz
niu_tx_time_offset	**16**	**2**	in steps of half a downstream symbol
niu_tx_power	**8**	**1**	in steps of 0.2 dB below -10 dBm.
niu_rx_power	**8**	**1**	in steps of 0.2 dB below -30 dBm.
}			

The **niu_tx_LO_offset** is a signed integer with a resolution of 1 kHz where a positive value indicates that the LO for the transmitted signal is offset higher than the nominal LO value by this amount. This value includes any short loop, as well as, MAC controlled long loop corrections.
The **niu_rx_LO_offset** is a signed integer with a resolution of 1 kHz where a positive value indicates that the LO for the received signal is offset higher than the nominal LO value by this amount.
The **niu_tx_time_offset** is a signed integer with a resolution of a .5 downstream modulation symbol which equals 1 downstream sample clock period where a positive value indicates that the NIU is delaying its transmit, and a negative value indicates that the NIU is transmitting earlier than nominally expected.
The **niu_tx_power** is a negative integer with a resolution of 0.2 dB below -10 dBm.
The **niu_rx_power** is a negative integer with a resolution of 0.2 dB below -30 dBm.

tx_calibration

tx_calibration()	Bits	Bytes	Bit Number / Description
freq_offset_value	**8**	**1**	in steps of 1 kHz
time_offset_value	**16**	**2**	in steps of half a downstream symbol
power_offset_value	**8**	**1**	in steps of 0.2dB
}			

The offset values for the upstream transmit signal from the NIU are sent in this message.
The **freq_offset_value** is a signed integer with a resolution of 1kHz where a positive value indicates that the NIU should increase its frequency, and a negative value indicates that the NIU should decrease its transmit frequency.
The **time_offset_value** is a signed integer with a resolution of a 0.5 downstream modulation symbol which equals 1 downstream sample clock period where a positive value indicates that the NIU should delay its transmit, and a negative value indicates that the NIU should transmit sooner.
The **power_offset_value** is a signed integer with a resolution of 0.2 dB where a positive value indicates that the NIU should raise its power, and a negative value indicates that the NIU should lower it transmit power. In addition to these power offset values from the AIU, the NIU shall implement an automatic transmit power correction algorithm based on the downstream received signal. Poll requests do not need to be sent in order to determine the NIUs transmit signal offset values. This would be possible if the head-end is capable of determining timing, etc. adjustments from traffic time slots.

7.10.3.9 Network Entry

The AIU polls each of the NIUs on at least one of the downstream frequency channels in a group. Before the NIU enters the network, it may be polled on more than one downstream frequency channel from different channel groups, and a different niu_id may be used for each group. When the NIU attempts to enter the network, it acquires a downstream frequency channel and listens for the poll directed to it. Since the NIU has not entered the network, in order for the NIU to recognize that the poll is directed to it, the AIU sends the NIUs partial or full serial number along with the niu_id in the polling request message. One NIU may be polled more than once before another NIU is polled, so long as no other requirements are being violated. Since polls are not necessarily round robin, an NIU is not able to wait till the same niu_id comes around twice to in order to determine that it is not being polled on that downstream channel. Each NIU's transmit signal must be corrected on a regular basis, but a poll request type message is not necessary in order to send a transmit calibration message to the NIU. The

 © ISO/IEC 1999 - All rights reserved

Copyright International Organization for Standardization
Provided by IHS under license with ISO
No reproduction or networking permitted without license from IHS Not for Resale

transmit calibration message must be sent at least once every 2 seconds worst case. All NIUs that have not entered the network but are assigned to be polled on the downstream frequently will be polled on that downstream frequency channel no less frequent than 2 seconds. If the NIU waits 2 seconds, but does not receive its serial number, it will acquire the next downstream frequency and again listen for its serial number. This process repeats until the NIU finds a downstream frequency channel on which it is being polled. Once the NIU finds its poll and, then, responds to the poll, the NIU is only polled by this one downstream frequency channel.
Guard time slots may need to follow the NIU poll response time slot until the NIU transmit signal is sufficiently time aligned, so that the poll response time slot sent by the NIU does not interfere with adjacent upstream time slots during the initial polling handshakes. Once the NIU is calibrated, contention and reserved time slots may be allocated, and MAC control sessions may be assigned and utilized. The AIU shall continue to poll the NIU to maintain upstream transmit signal calibration, even though there may be a temporary lack of user activity.

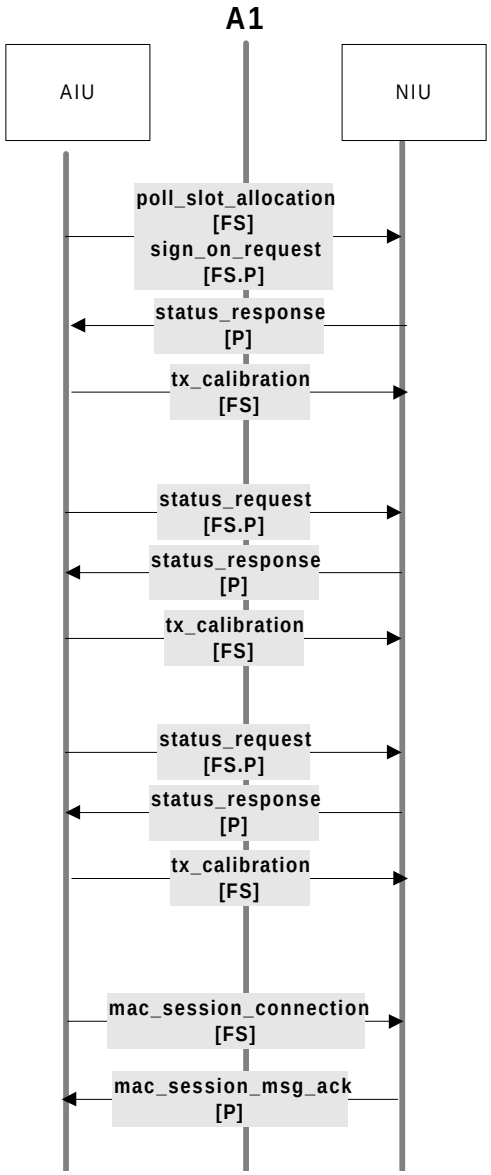

Figure 7.10-33 - Network Entry

--`,,```,,,,````-`-`,,`,,`,`,,`---

Copyright International Organization for Standardization
Provided by IHS under license with ISO
No reproduction or networking permitted without license from IHS Not for Resale

sign_on_request

sign_on_request() {	Bits	Bytes	Bit Number / Description
serial_no			
num_serial_no_bytes	**8**	**1**	Indicates N with N ≤ 20 bytes
serial_no_bytes		**N**	MS-byte first
upstream_signal_config			
symbol_rate_ratio	**8**	**1**	
bits_per_symbol	**8**	**1**	=2 for QPSK, 4 for 16QAM
upstream_frame_delay	**32**	**4**	Units of downstream Reed Solomon symbols
synchronous_time_slot_delay	**8**	**1**	
num_pwr_retries	**8**	**1**	
}			

The **sign_on_request** has two parts, the serial_no, which indicates to the NIU that it is assigned to the downstream frequency channel that is transmitting this message, and the upstream_signal_config, which is used by the NIU to configure it upstream transmitted signal.
The **num_serial_no_bytes** is an 8-bit unsigned integer indicating the number of bytes in the serial_no, or least-significant bytes of the serial number, that are in this message. The maximum number of bytes is 20.
The **serial_no_bytes** is a variable length field representing the serial_no, MS-byte first.
The **symbol_rate_ratio** is an 8-bit unsigned integer indicating the ratio of downstream modulation symbols to upstream modulation symbols. Note that this is always an integer. This ratio is used by the NIU to set the upstream data rate.
The **bits_per_symbol** is an 8-bit unsigned integer used to specify the modulation parameters of the new channel to enable the NIU to use higher order modulation. Valid values are 2 for QPSK, and 4 for 16QAM.
The **upstream_frame_delay** is a 32-bit unsigned integer indicating the number of downstream Reed Solomon symbols to delay the start of the upstream frame from receipt of the downstream frame start cell header or MPEG PID. In order to define a lower limit for the time to process the MAC PDUs, the upstream_frame_delay shall be no less than 37 percent of the frame length. Note that the cells which encapsulate MAC PDUs to be transmitted on downstream frame n, which is designated by frame start frame number n, shall be transmitted to the NIU no later than the first 7 percent of frame n+1. This allows the NIU 30 percent of the frame time to process the maximum MAC PDUs that may be received in one frame.
The **synchronous_time_slot_delay** is an 8-bit unsigned integer indicating which upstream frame in which the NIU should start utilizing a synchronously allocated time slot such as a polling response time slot. (See time slot allocation messages.) The start of the next upstream frame after the time slot message is received is frame number 1.
The **num_pwr_retries** is an 8-bit unsigned integer indicating the number of times that the NIU shall attempt to enter the network at the same power level before increasing the transmit power by 3 dB.

 © ISO/IEC 1999 - All rights reserved

Copyright International Organization for Standardization
Provided by IHS under license with ISO
No reproduction or networking permitted without license from IHS
Not for Resale

7.10.3.10 MAC Session Connections

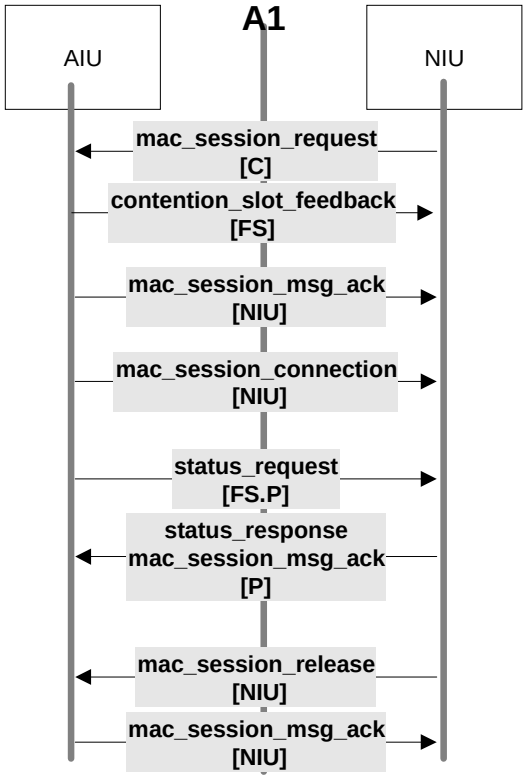

Figure 7.10-34 - MAC Session Connections

MAC session connections are ATM connections between the NIU and AIU that transport communication between two control entities. The control entities may or may not reside in the NIU and AIU. It may be necessary that the connection assigned by this mac_session_connection message be switched to other virtual connections one or more times to reach the control entity.

In order to establish a session connection, it is not necessary that the NIU request a connection. The AIU may simply establish the connection by sending a mac_session_connection message to the NIU. In the case of ATM transport, the first MAC session connection is known by default as VPI = 0xFF, VCI = niu_id. This session is the MAC connection for transporting MAC messages in the downstream random access time slots and in the upstream reserved time slots. In the case of MPEG-TS transport, the MAC session is known by default as MAC Header 0x1FFF and the broadcast/niu header corresponding to the niu_id.

Due to the shared wireless physical media, assigning a different MAC session connection for each NIU alleviates the need for every NIU to process every MAC session connection cell to identify which cell payloads contain its niu_id.

All session connection messages require an acknowledgment via the mac_session_msg_ack message. A mac_session_msg_ack message sent by an AIU to an NIU, or by an NIU to an AIU, must be completely received by the NIU, or AIU, within 2 seconds from the time that the MAC session message is sent by the NIU, or AIU. Any MAC session message sent by the NIU or AIU that does not receive acknowledgment within the specified time shall immediately be resent. As long as the acknowledgment is not received, the MAC session message shall be resent a minimum of 5 times. If the message becomes invalid during this process, the NIU and AIU shall complete this process with the original message before changing the MAC session message sent.

© ISO/IEC 1999 - All rights reserved

Copyright International Organization for Standardization
Provided by IHS under license with ISO
No reproduction or networking permitted without license from IHS
Not for Resale

mac_session_request

mac_session_request() {	Bits	Bytes	Bit Number / Description
niu_session_id	**32**	**4**	
session_type	**8**	**1**	{enum}
direction_type		**1**	
Reserved	6		7..2
downstream_direction	1		1:{no, yes}
upstream_direction	1		0:{no, yes}
}			

A mac_session_request message is to set-up a connection to an entity that can provide the control flow for that type of session. If a signaling connection for a type of session has been connected, then subsequent signaling messages and connection data do not require a mac_session_request message and handshake.
The **niu_session_id** is a unique number for that session for the one NIU designated by the niu_id in the message header.
The **session_type** is an enumerated type and indicates to the AIU to which entity at the head-end that the session control connection should be made. The session connection can be uni-directional to support uni-directional connections or bi-directional to support bi-directional connections.

```
enum Session_Type {     MAC_CONTROL
                              Reserved 1..255   };
```

To request a bi-directional connection, set both the **downstream** and **upstream** bits. Otherwise, set either the upstream or downstream bit to indicate the direction of the requested uni-directional connection.

mac_session_connection

mac_session_connection() {	Bits	Bytes	Bit Number / Description
niu_session_id	**32**	**4**	
session_type	**8**	**1**	{enum}
Downstream			
VPI	**8**	**1**	VPI/VCI = 0/0 indicates
VCI	**16**	**2**	no assignment is made
Upstream			
VPI	**8**	**1**	VPI/VCI = 0/0 indicates
VCI	**16**	**2**	no assignment is made
}			

The mac_session_connection specifies the VC, i.e. VPI/VCI, or the broadcast/niu header that the NIU must use for the requested session connection. The session connection can be uni-directional to support uni-directional connections. The downstream VPI and downstream VCI are the VPI/VCI for use in the downstream direction. The upstream VPI and upstream VCI are the VPI/VCI for use in the upstream direction. For a bi-directional connection the upstream and downstream VPI/VCI may be the same but are not required to be. In the case of uni-directional connections, the reverse direction is null as indicated by VPI/VCI = 0/0 in that direction. In the case of MPEG-TS, the downstream VCI field shall be interpreted as the niu_id. A different control connection for signaling may be assigned for each port of the STU for support of simultaneous signaling control flows from the same STU.
The **session_type** is an enumerated type and indicates to the AIU to which entity the session control connection should be made.

```
enum Session_Type {     MAC_CONTROL
                              Reserved 1..255   };
```

mac_session_release

mac_session_release() {	Bits	Bytes	Bit Number / Description
niu_session_id	**32**	**4**	
}			

The MAC session connection is disconnected after it is no longer needed by the STU or can no longer be supported by the AIU. A mac_session_release originates from either the AIU or the NIU.

 © ISO/IEC 1999 - All rights reserved

Copyright International Organization for Standardization
Provided by IHS under license with ISO
No reproduction or networking permitted without license from IHS Not for Resale

mac_session_msg_ack

mac_session_msg_ack () {	Bits	Bytes	Bit Number / Description
niu_session_id	**32**	**4**	
}			

To ensure that session is provided within a reasonable or necessary time, as determined by the type of session, the mac_session_msg_ack is sent in response to each of the MAC session messages.

7.10.3.11 Sector Load Balance

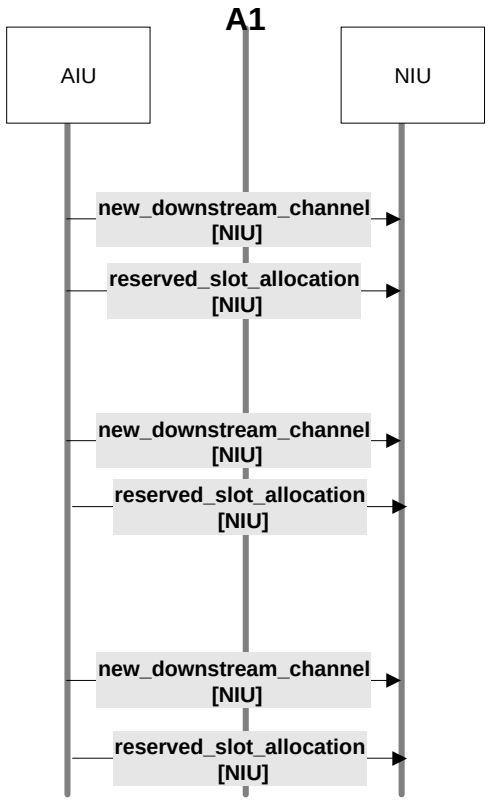

Figure 7.10-35 - Sector Load Balance

new_downstream_channel

new_downstream_channel() {	Bits	Bytes	Bit Number / Description
downstream_frequency	**32**	**4**	in steps of 1 MHz
channel_symbol_rate	**32**	**4**	in steps of 8 kbaud
bits_per_symbol	**8**	**1**	16QAM = 4, 64QAM = 6, 256QAM = 8
roll_off_factor	**8**	**1**	{enum}
trellis_coding_enable	**8**	**1**	0 = disabled, nonzero = enabled
}			

This message may be used to tell the NIU to reacquire on a downstream channel other than the one it has currently acquired. The NIU initially acquires the lowest QPSK channel, listens for its poll, goes to the next QPSK channel that it can acquire, and listens there for its poll, etc. until its poll is found. The AIU may then use this message to move the NIU to a downstream channel with different modulation and FEC parameters to take advantage of the enhanced capabilities or advantaged propagation environment of the NIU.
The **downstream_frequency** is a 32-bit unsigned integer indicating the new frequency at the NIU input, in 1 MHz steps at IF frequency.
The **channel_symbol_rate** is a 32-bit unsigned integer indicating the channel symbol rate in 8 kbaud steps.

--`,,```,,,,````-`-`,,`,,`,`,,`---
Copyright International Organization for Standardization
Provided by IHS under license with ISO
No reproduction or networking permitted without license from IHS
Not for Resale

The **bits_per_symbol** is an 8-bit unsigned integer used to specify the modulation parameters of the new channel to enable the NIU to use higher order modulation. Valid values are 4 for 16QAM, 6 for 64QAM and 8 for 256QAM.
The **roll-off_factor** field specifies the roll-off factor (0.2 or 0.35) in an enumerated type.

```
enum roll-off_factor    {     roll_off_0.2
                              roll_off_0.35
                              Reserved 2..255   };
```

The **trellis_coding_enable** field specifies whether the new frequency channel will employ trellis coding.

7.10.3.12 Contention Slot Feedback

contention_slot_feedback

contention_slot_feedback() {	Bits	Bytes	Bit Number / Description
upstream_frequency	**16**	**2**	in steps of 100 kHz
retransmission_probability	**8**	**1**	
num_time_slots	**16**	**2**	
for (i=0; i<num_time_slot;i++) {			Fill bytes starting with MSBs
contention_slot_status	**2**		{enum}
}			
}			

The contention_slot_feedback message is used by the AIU to send feedback to the NIU for contention time slot reuse algorithm stabilization. For the time slots in the upstream channels for a given downstream channel, the contention_slot_feedback message shall be sent on every frame start to give status of the last completely received upstream frame. For each upstream frequency, the message contains the probability of retransmission, and it contains specific receipt feedback information for each time slot starting from the lowest numbered time slot, i.e. time slot number 0 or the first time slot, in the upstream frame to the last time slot in the frame that is allocated as a contention time slot.
The **upstream_frequency** is a 16-bit unsigned integer indicating the upstream at the NIU IF output in 100kHz steps.
The **retransmission_probability** is an 8-bit fractional representation of the probability of collision if the NIU transmits on a contention time slot in the next frame on that upstream channel.
The **num_time_slots** is a 16-bit unsigned integer indicating the number of time slots that are in the following list for the upstream frequency.
The **contention_slot_status** list begins with the MS 2-bits of the byte following the num_time_slots field. Four contention_slot_status fields are packed into this and each additional byte. If status for more than four time slots are given for one upstream frequency, then the fifth status is in the MS 2-bits of the next byte, etc. The 2-bits can indicate either idle, receipt, collision, or unused.

- **Idle** indicates that no NIU transmitted on the contention time slot.
- **Receipt** indicates that only one NIU transmitted on the contention time slot, and, thus, the contents have been successfully received at the AIU.
- **Collision** indicates that two or more NIU transmitted on the contention time slot, and, thus, since a collision occurred, none of the transmissions on the time slot have been successfully received at the AIU.
- **Unused** indicates that this time slot is not allocated as a contention time slot.

```
enum contention_slot_status   {     Idle,
                                          Receipt,
                                          Collision,
                                          Unused      };
```

 © ISO/IEC 1999 - All rights reserved

Copyright International Organization for Standardization
Provided by IHS under license with ISO
No reproduction or networking permitted without license from IHS Not for Resale

7.11 Passband PHY on LMDS

This Physical Layer Interface supports unidirectional and bi-directional transmission over radio frequency (above 10 GHz). It is referred to as LMDS (Local Multipoint Distribution Services).
This Physical Layer Interface supports bi-directional transmission over millimeter radio wave. This Interface is point-to-multipoint: TDM from Access node to STB and TDMA from STB to Access Node. This Physical Layer Interface specifies the complete physical layer structure for the bi-directional carriage of S1, S2, S3, S4, and S5 information. The unidirectional LMDS (also called MVDS - Multipoint Video Distribution Systems) can be provided by using only the Section 7.11.1.
The spectrum allocations for downstream and upstream transmissions depend on the LMDS region. The Physical Interface applies to the intermediate frequency (IF) interface between the Radio Frequency Unit (RFU) and the UPI/STB as measured at the UPI/STB connector .Figure 7.11-1 shows the downstream and upstream spectrum allocation.

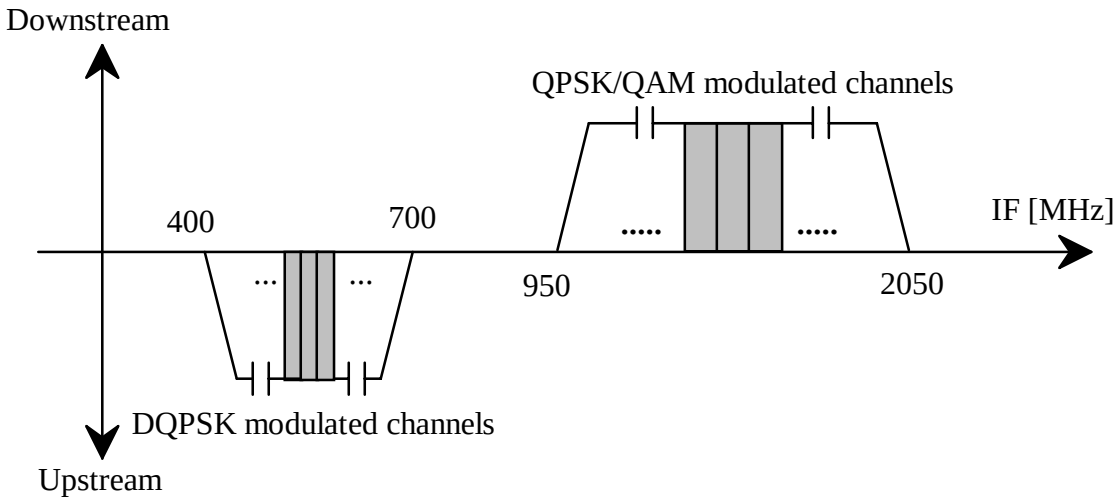

Figure 7.11-1 - Conceptual Illustration of LMDS Spectrum Channelization

Two frame structures are provided for downstream data transmission, one for MPEG-2 Transport Streams and the other for ATM-cell-transfer.

7.11.1 Downstream LMDS

7.11.1.1 Encoding Decoding Process

The processes in the following subclauses shall be applied as shown in Figure 7.11-2.

Copyright International Organization for Standardization
Provided by IHS under license with ISO
No reproduction or networking permitted without license from IHS Not for Resale

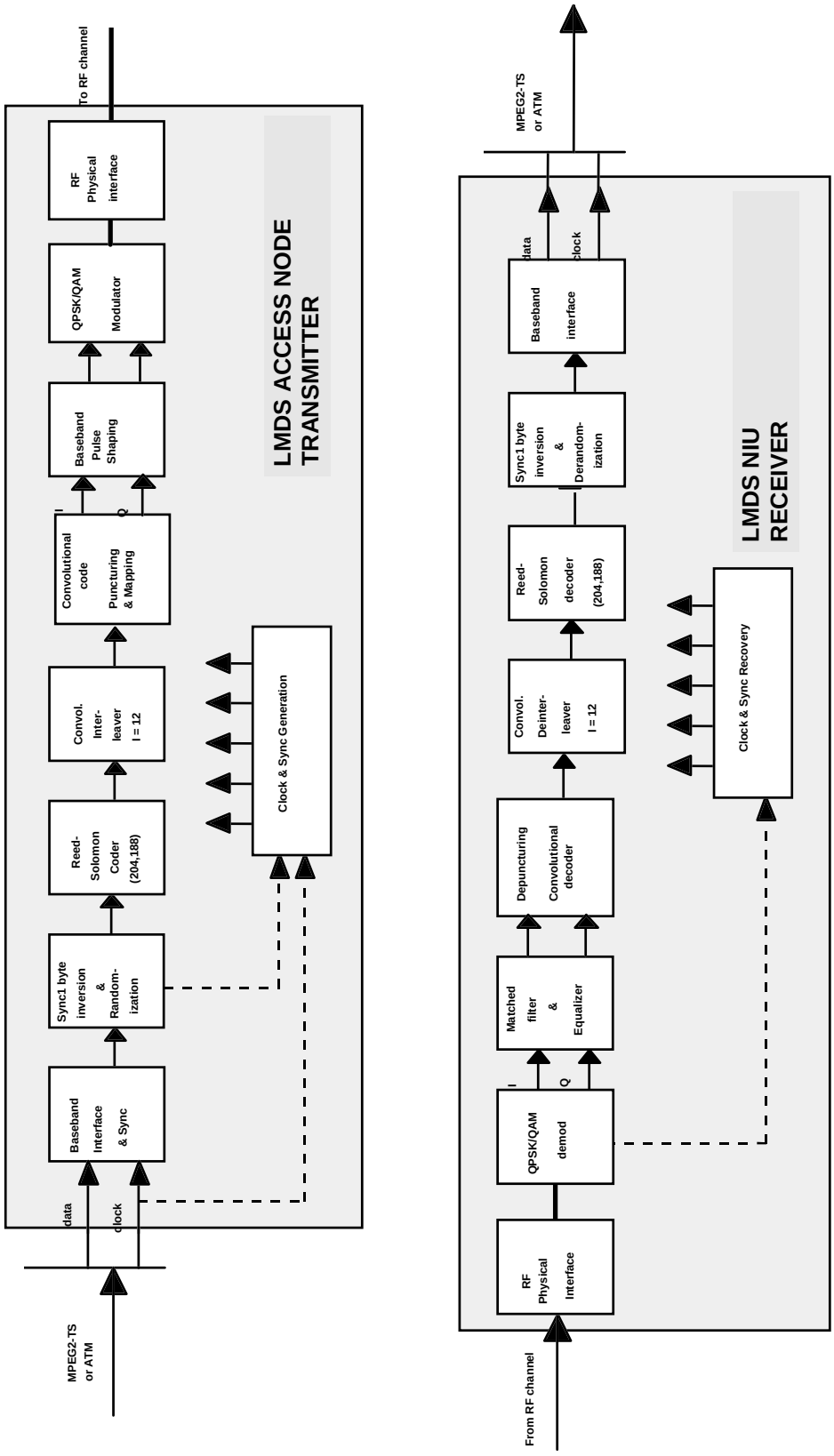

Figure 7.11-2 - Conceptual block diagram of elements at the LMDS head-end and receiving site.

 © ISO/IEC 1999 - All rights reserved

--`,,```,,,,````-`-`,,`,,`,`,,`---

Copyright International Organization for Standardization
Provided by IHS under license with ISO
No reproduction or networking permitted without license from IHS

Not for Resale

7.11.1.1.1.1 Baseband interfacing and sync

This unit shall adapt the data structure to the format of the signal source. The framing structure shall be in accordance with MPEG-2 Transport Stream (including sync bytes).

7.11.1.1.1.2 Sync 1 inversion and randomization

This unit shall invert the Sync 1 byte according to the MPEG-2 framing structure, and randomizes the data stream for spectrum shaping purposes.

7.11.1.1.1.3 Reed-Solomon (RS) coder

This unit shall apply a shortened Reed-Solomon (RS) code to each randomized transport packet to generate an error-protected packet. This code shall also be applied to the Sync byte itself.

7.11.1.1.1.4 Convolutional interleaver

This unit shall perform a convolutional interleaving of the error-protected packets with I=12/M=17. The periodicity of the sync bytes shall remain unchanged.

7.11.1.1.1.5 Convolutional coder

This unit shall perform the convolutional code with rates 1/2, 2/3, 3/4, 5/6 and 7/8 obtained by puncturing the code with rate 1/2. Convolutional encoding shall be applied to QPSK only.

7.11.1.1.1.6 Baseband shaping

This unit performs mapping from differentially encoded m-tuples to I and Q signals and a square-root raised cosine filtering of the I and Q signals prior to QPSK modulation.

7.11.1.1.1.7 Modulation and Physical Interface

This unit performs QPSK modulation (Grade A) or 16-QAM (Grade B). It is followed by interfacing the QPSK/16-QAM modulated signal to the Intermediate Frequency (IF) channel.

7.11.1.1.1.8 LMDS receiver

A System receiver shall perform the inverse signal processing, as described for the modulation process above, in order to recover the baseband signal.

7.11.1.2 MPEG-2 Transport Stream

The MPEG-2 Transport Stream is defined in [ISO/IEC 13818-1]. The Transport Stream for MPEG-2 data is comprised of packets having 188 bytes, with one byte for synchronization purposes, three bytes of header containing service identification, scrambling and control information, followed by 184 bytes of MPEG-2 or auxiliary data.

7.11.1.3 Asynchronous Transfer Mode Stream

The Asynchronous Transfer Mode stream is defined in [ITU-T I.361]. An ATM stream is comprised of packets having 53 bytes, with a five byte header including connection identification and header error control, followed by 48 bytes of ATM payload.

7.11.1.4 Framing Structure when carrying MPEG-2-TS

The framing organization shall be based on the MPEG-2-TS packet structure. The system framing structure shall be as shown in Figure 7.11-3.

Copyright International Organization for Standardization
Provided by IHS under license with ISO
No reproduction or networking permitted without license from IHS Not for Resale

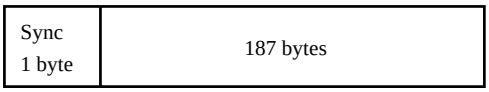

(a) MPEG2-Transport Stream MUX Packet

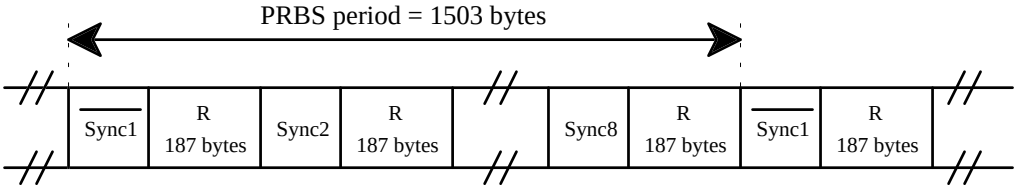

(b) Randomized transport packets: Sync bytes and Randomized Sequence R

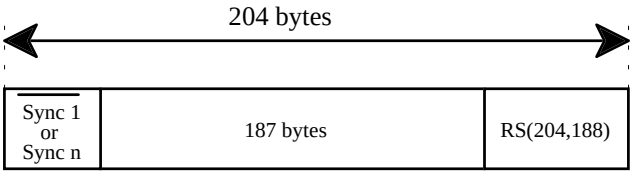

(c) Reed-Solomon RS(204,188, t=8) error protected packet

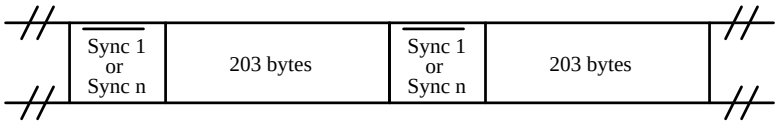

(d) Interleaved Frames with Interleaving Depth I=12

$\overline{\text{Sync 1}}$ = non-randomized, complemented sync byte
Sync n = non-randomized, sync byte, n = 2...8

Figure 7.11-3 - Framing structure when carrying MPEG-2-TS.

7.11.1.5 Framing structure when carrying ATM

7.11.1.5.1 Mapping of ATM cells

A framing structure is required to transport ATM over a LMDS network. This structure provides synchronization for interleaving and FEC block alignment appropriate to the coax environment. This function is similar to that provided by SDH and SONET frames for similar functions related to their respective environments.
This structure supports the carriage of the ATM services needed for DAVIC 1.3.1a functionality. The applicability of this structure to other ATM services would need to be determined on a case by case basis.
188-byte ATM transport MUX packets shall be used for the carriage of ATM over a LMDS network. This packet structure provides synchronization and payload. The format of the packet structure is shown in Figure 7.11-4. The steps (b), (c) and (d) shown in Figure 7.11-3 shall also apply to ATM transport MUX packets.
Note that although the framing structure when carrying ATM cells uses the same length packets as for the case of when carrying MPEG-2-TS, it is not the intent that these packets can be passed directly into an MPEG-2-TS demux. This physical transport frame should not be assumed to be an MPEG-2-TS frame.

 © ISO/IEC 1999 - All rights reserved

Copyright International Organization for Standardization
Provided by IHS under license with ISO
No reproduction or networking permitted without license from IHS
Not for Resale

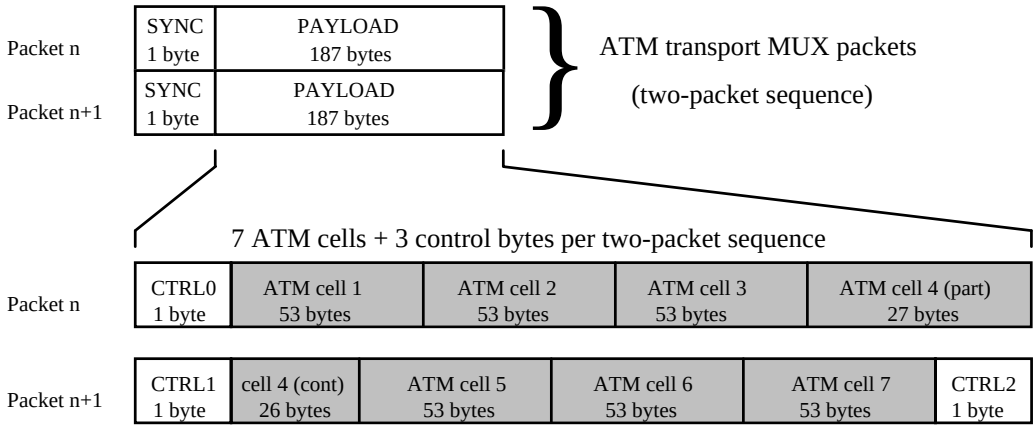

Figure 7.11-4 - Framing structure when carrying ATM.

The fields in the ATM transport MUX packets (Figure 7.11-4) are defined as:

SYNC — The sync byte is a fixed 8 bit field with value 01000111b used for frame synchronization.

PAYLOAD — This field carries 187 bytes of payload and is described in detail below.

A transmission convergence sublayer is used to map the ATM cells into the payload provided by the frame. Three bytes are defined for this functionality labeled CTRL0, CTRL1, and CTRL2. The alignment of the ATM cells is synchronized to a two packet sequence as shown below. This provides rapid cell delineation and cell delineation recovery after errors..

CTRL0 — This byte indicates that a packet is the first of the two packet sequence. Its value is E1PSSSSSb where E, P, and S bits are defined below. This also indicates that the first byte of an ATM cell immediately follows.

CTRL1 — This byte indicates that a packet is the second of a two packet sequence. Its value is E0PSSSSSb where E, P, and S bits are defined below.

CTRL2 — This byte is reserved. It will be defined for carriage of operation, administration, and maintenance information (OAM).

Definition of E, P and S bit setting:

E (error) — The transport error indicator is a 1 bit flag. When set to “1”, it indicates that at least 1 uncorrectable bit error exists in the associated packet. This bit may be set to “1” by entities in the transport layer. When set to “1”, this bit shall not be reset to “0” unless the bit value(s) in error have been corrected.

P (priority) — The transport priority is a 1 bit indicator. When set to “1”, it indicates that the associated packet is a greater priority than the packets with the transport priority set to “0”.

SSSSS (stuffing) — This fixed 5 bit field with value 11111b. Any packet without this value should be discarded. This could indicate that the associated packet is used for stuffing purposes and does not contain valid payload. One or more of these packets may be placed anywhere in the stream.

ATM Transport MUX packets and MPEG-2 Transport MUX packets shall have a common physical media dependent sublayer. This means that usage of the High Reliability Marker, channel coding, byte-to-symbol mapping, QAM modulation and baseband filter characteristics shall apply in an identical way to the transport of ATM Transport MUX packets and MPEG-2 Transport MUX packets.

7.11.1.5.2 Cell specific functionalities

7.11.1.5.2.1 HEC Generation/Verification

The entire header (including the HEC byte) shall be protected by the Header Error Control (HEC) sequence. The HEC code shall be contained in the last byte of the ATM header.

The HEC sequence shall be capable of:

- single bit error correction
- multiple-bit error detection

Error detection in the ATM header shall be implemented as defined in [ITU-T I.432].

Copyright International Organization for Standardization
Provided by IHS under license with ISO
No reproduction or networking permitted without license from IHS Not for Resale

The HEC byte shall be generated as described in [ITU-T I.432], including the recommended modulo-2 addition (XOR) of the pattern 01010101b to the HEC bits.
The generator polynomial coefficient set used and the HEC sequence generation procedure shall be in accordance with [ITU-T I.432].

7.11.1.5.2.2 Cell Randomization and Derandomization

Since the ATM cell boundaries are synchronous to the ATM transport MUX packets, ATM cell (de)randomization is not needed to improve the efficiency of the ATM cell delineation algorithm. Therefore, ATM cell randomization shall not be applied.

7.11.1.5.2.3 Cell Delineation

Since the ATM cell boundaries are synchronous to the ATM transport MUX packets, the implementation of an ATM cell based delineation is not needed in the STB.

7.11.1.6 High Reliability Marker (HRM)

The High Reliability Marker (HRM) is system transparent tool that provides improved packet synchronization robustness. It is a transparent tool because the inclusion or exclusion of the HRM does not affect interoperability of DAVIC system components. This transparency is accomplished by the format of the HRM as a field carried in the normal payload area of a standard MPEG-2 Transport Stream (MPEG-2-TS) null packet. The PID of the HRM is assigned a value of 0x1FFF, which is the PID value that is assigned for null packets. The HRM packet is inserted into the MPEG-2 Transport Stream prior to the framing operations of randomization and interleaving.
The inclusion or exclusion of the HRM tool by DAVIC systems components (such as STBs, Delivery components, Servers, etc.) shall not affect the compliance of such components to the DAVIC specifications.
The High Reliability Marker (HRM) consists of a 184 byte Linear Feedback (LFSR) generated pattern. The HRM packet (where HRM packet is defined as an MPEG-2-TS packet which contains the PID value 0x1FFF and the HRM field in the packet payload) is sent in constant intervals of 204 packets. The LFSR generated patterns is defined by the polynomial:

$$x^8 + x^6 + x^5 + x + 1$$

with an initial seed value of 10000000.
The HRM packet is illustrated in Figure 7.11-5.

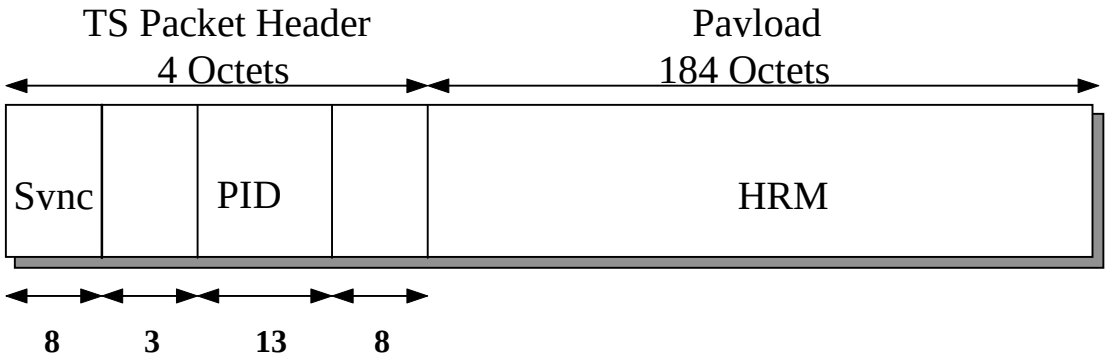

Figure 7.11-5 - HRM Packet (Octet = byte)

An important feature of the HRM tool is the fact the HRM packet is transparent in DAVIC components which do not utilize the HRM tool, and this transparency allows for full interoperability between DAVIC components which utilize the HRM tools and DAVIC components which do not utilize the HRM tool.
This transparency/interoperability issue is described as follows:
(1) A DAVIC compliant multiplexer which utilizes the HRM tool as part of its multiplex structure will produce an MPEG-2 Transport Stream in which every 204th TS packet is an HRM packet. DAVIC compliant demultiplexers that do not utilize the HRM tool will discard the MPEG-2-TS packet which contains the HRM because the null PID value will not be part of any defined program. DAVIC compliant demultiplexers that utilize the HRM tool will accept the MPEG-2-TS packet that contains the HRM, via recognition of the HRM in a designated MPEG-2-TS null packet, and will utilize this information in its packet synchronization algorithm.

 © ISO/IEC 1999 - All rights reserved

Copyright International Organization for Standardization
Provided by IHS under license with ISO
No reproduction or networking permitted without license from IHS
Not for Resale

(2) A DAVIC compliant multiplexer which do not utilize the HRM tool will generate a MPEG-2 Transport Stream that does not include the HRM packet. DAVIC compliant demultiplexers that do not utilize the HRM tool are unaffected. DAVIC compliant demultiplexers that do utilize the HRM tool will operate without the HRM, although without the additional synchronization robustness that would exist if the HRM was present.

7.11.1.7 Channel coding

To achieve the appropriate level of error protection required for LMDS transmission of digital data, a concatenated code based on a convolutional code and a shortened Reed-Solomon (RS) code shall be used. Protection against burst errors shall be achieved by the use of byte interleaving.

7.11.1.7.1 Randomization for spectrum shaping

The System input stream shall be organized in fixed length packets (see Figure 7.11-2) following the MPEG-2-TS multiplexer. The total packet length of the MPEG-2-TS packet is 188 bytes. This includes 1 sync-word byte (i.e. 47hex). The processing order at the transmitting side shall always start from the MSB (i.e. 0) of the sync word-byte (i.e. 01000111).
In order to ensure adequate binary transitions for clock recovery, the data at the output of the MPEG-2-TS multiplexer shall be randomized in accordance with the configuration depicted in Figure 7.11-6.
The polynomial for the Pseudo Random Binary Sequence (PRBS) generator shall be:

$$1 + X^{14} + X^{15}$$

Loading of the sequence "100101010000000" into the PRBS registers, as indicated in Figure 7.11-6, shall be initiated at the start of every eight transport packets. To provide an initialization signal for the derandomizer, the MPEG-2 sync byte of the first transport packet in a group of eight packets shall be bitwise inverted from 47hex to B8hex.

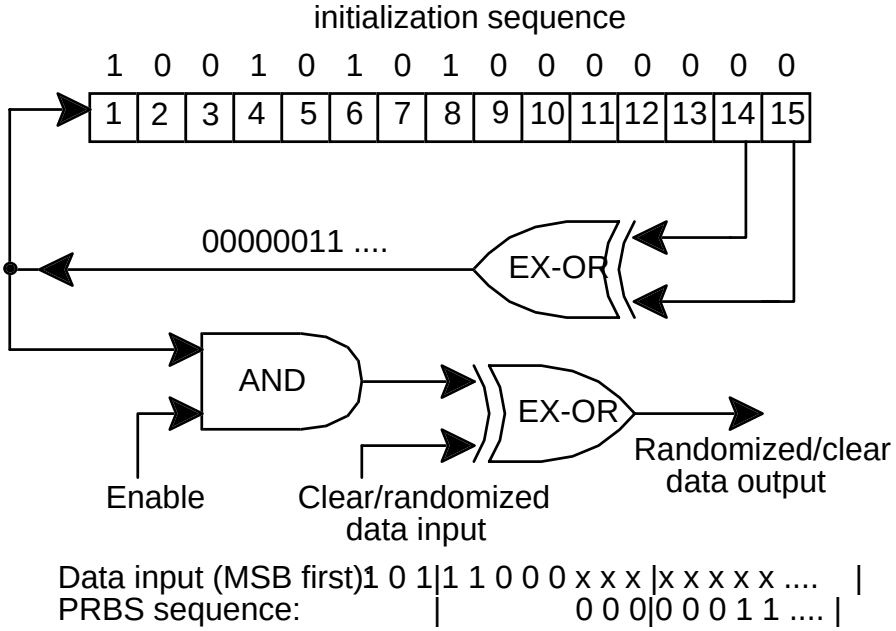

Figure 7.11-6 - Randomizer/derandomizer schematic diagram.

The first bit at the output of the PRBS generator shall be applied to the first bit of the first byte following the inverted MPEG-2 sync byte (i.e.B8hex). To aid other synchronization functions, during the MPEG-2 sync bytes of the subsequent 7 transport packets, the PRBS generation continues, but its output shall be disabled, leaving these bytes unrandomized. The period of the PRBS sequence shall therefore be 1503 bytes.
The randomization process shall be active also when the modulator input bit-stream is non-existent, or when it is non-compliant with the MPEG-2 Transport Stream format (i.e. 1 sync byte + 187 packet bytes). This is to avoid the emission of an unmodulated carrier from the modulator.

Copyright International Organization for Standardization
Provided by IHS under license with ISO
No reproduction or networking permitted without license from IHS Not for Resale

7.11.1.7.2 Reed-Solomon coding

Following the energy dispersal randomization process, systematic shortened Reed-Solomon encoding shall be performed on each randomized MPEG-2-TS packet, with T = 8. This means that 8 erroneous bytes per packet can be corrected. This process adds 16 parity bytes to the MPEG-2-TS packet to give a code word (204,188). RS coding shall also be applied to the packet sync byte, either non-inverted (i.e. 47hex) or inverted (i.e. B8hex).
The Reed-Solomon code shall have the following generator polynomials:
Code Generator Polynomial: $g(x) = (x+\mu^0)(x+\mu^1)(x+\mu^2) \ldots (x+\mu^{15})$, where μ= 02hex
Field Generator Polynomial: $p(x) = x^8 + x^4 + x^3 + x^2 + 1$
The shortened Reed-Solomon code shall be implemented by appending 51 bytes, all set to zero, before the information bytes at the input of a (255,239) encoder; after the coding procedure these bytes are discarded.

7.11.1.7.3 Convolutional interleaving

Following the scheme of Figure 7.11-7, convolutional interleaving shall be applied to the error protected packets (see Figure 7.11-3 (c)). This results is an interleaved frame (see Figure 7.11-3 (d)).
The convolutional interleaving process shall be based on the Forney approach, which is compatible with the Ramsey type III approach, with I=12. The Interleaved frame shall be composed of overlapping error protected packets and shall be delimited by MPEG-2 sync bytes (preserving the periodicity of 204 bytes).
The interleaver is composed of I branches, cyclically connected to the input byte-stream by the input switch. Each branch shall be a First In First Out (FIFO) shift register, with depth (M) cells (where M = N/I, N = 204 = error protected frame length, I = interleaving depth, j = branch index). The cells of the FIFO shall contain 1 byte, and the input and output switches shall be synchronized.
For synchronization purposes, the sync bytes and the inverted sync bytes shall be always routed into the branch "0" of the interleaver (corresponding to a null delay).
The deinterleaver is similar, in principle, to the interleaver, but the branch indexes are reversed (i.e. j = 0 corresponds to the largest delay). The deinterleaver synchronization is achieved by routing the first recognized sync byte into the "0" branch.

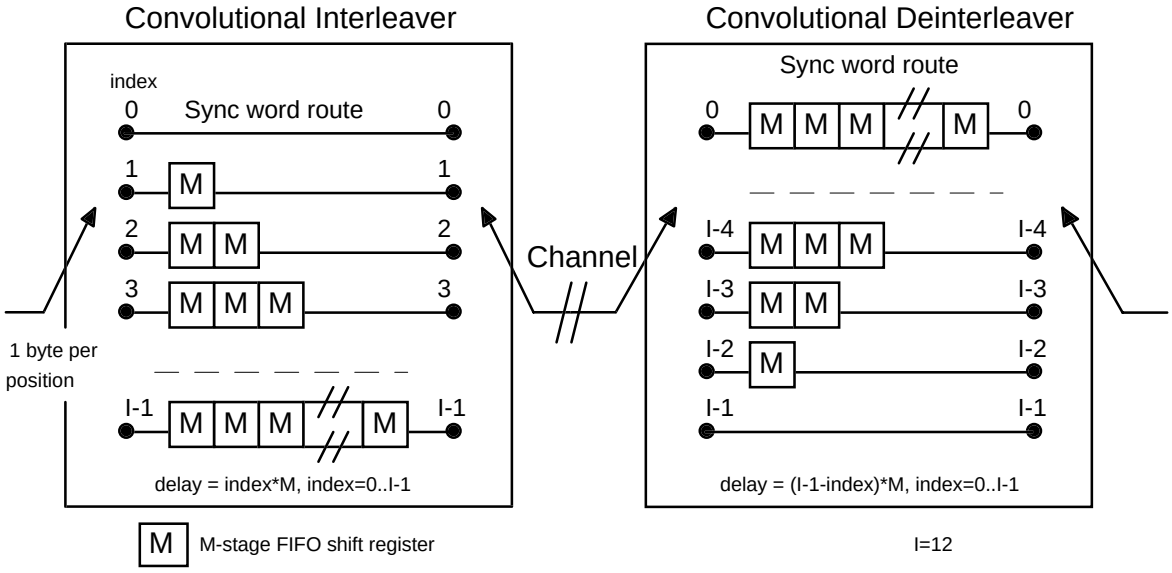

Figure 7.11-7 - Conceptual diagram of the convolutional interleaver and de-interleaver.

7.11.1.7.4 Convolutional coder

Convolutional coding is applied only when using QPSK modulation.
The system shall allow for a range of punctured convolutional codes, based on a rate 1/2 convolutional code with constraint length K=7. This will allow selection of the most appropriate level of error correction for a given service or data rate. The system shall allow convolutional coding with code rates of 1/2, 2/3, 3/4, 5/6 and 7/8. Rates 2/3, 3/4, 5/6 and 7/8 are achieved by transmitting only a subset of the rate 1/2 convolutional encoder output bits. The LMDS receiver can detect which convolutional encoding rate is used by trying and checking frame lock acquisition.
The punctured convolutional code shall be used as given in Table 7-45.

 © ISO/IEC 1999 - All rights reserved

--`,,```,,,,````-`-`,,`,,`,`,,`---
Copyright International Organization for Standardization
Provided by IHS under license with ISO
No reproduction or networking permitted without license from IHS
Not for Resale

An implementation example of the rate 1/2 convolutional encoder is shown in Figure 7.11-8. Bytes output from the convolutional interleaver shall be input to the convolutional encoder MSB first.

Table 7-45 - Punctured code definition

Original code			Code rates									
			½		2/3		3/4		5/6		7/8	
K	G1 (X)	G_2 (Y)	P	d_{free}	P	d_{free}	P	d_{free}	P	d_{free}	P	d_{free}
7	171_{oct}	133_{oct}	X=1 Y=1 $I=X_1$ $Q=Y_1$	10	X=10 Y=11 $I=X_1Y_2Y_3$ $Q=Y_1X_3Y_4$	6	X=101 Y=110 $I=X_1Y_2$ $Q=Y_1X_3$	5	X=10101 Y=11010 $I=X_1Y_2Y_4$ $Q=Y_1X_3X_5$	4	X=1000101 Y=1111010 $I=X_1Y_2Y_4Y_6$ $Q=Y_1Y_3X_5X_7$	3
Note1: 1 = transmitted bit 0 = non transmitted bit							Note2: X,Y,I and Q bit sequences are shown with increasing time from left to right					

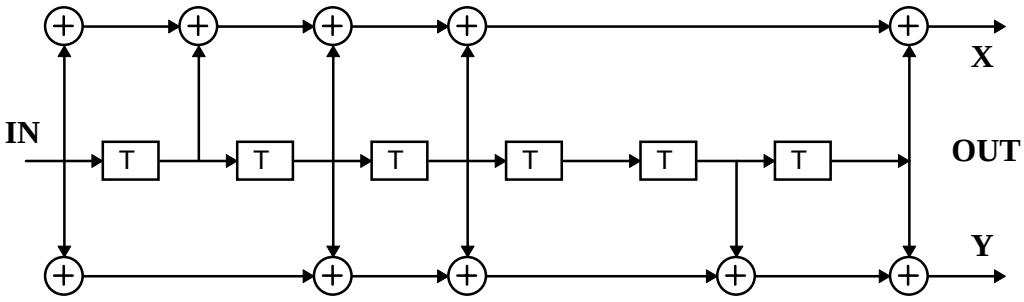

Figure 7.11-8 - Convolutional Encoder with rate 1/2.

7.11.1.8 QPSK Constellation Mapping

The byte-to-symbol mapping when using QPSK modulation is included in the convolutional code definition given in Table 7-45.
The system shall employ conventional Gray-coded QPSK modulation with absolute mapping (no differential encoding). For QPSK modulation, bit mapping in the signal space as given in the constellation diagram in Figure 7.11-9 shall be used. The constellation points represent the (IQ) bit couples as output from the convolutional encoder.

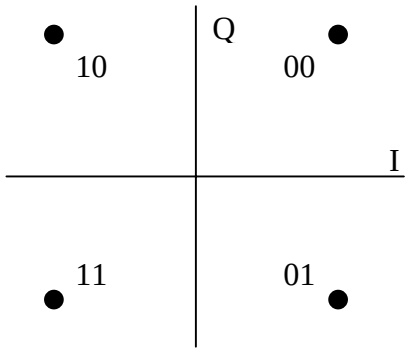

Figure 7.11-9 - QPSK Constellation diagram

7.11.1.9 16-QAM Constellation Mapping

When 16QAM modulation is used, convolutional encoding shall not be applied. Bytes output from the convolutional interleaver shall be mapped to symbols as given in Figure 7.11-10.

Copyright International Organization for Standardization
Provided by IHS under license with ISO
No reproduction or networking permitted without license from IHS Not for Resale

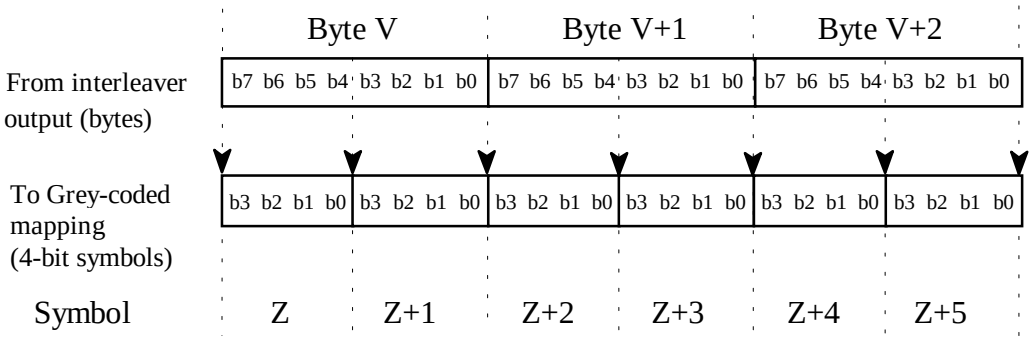

NOTE 1: b0 shall be understood as being the Least Significant Bit (LSB) of each byte or m-tuple.

NOTE 2: In this conversion, each byte results in 2 symbols, labeled Z, Z+1, ... etc. with Z being transmitted before Z+1.

Figure 7.11-10 - Byte to symbol conversion for 16QAM.

The system shall employ conventional Gray-coded 16QAM modulation with absolute mapping (no differential encoding). For 16QAM modulation, bit mapping in the signal space as given in the constellation diagram in Figure 7.11-11 shall be used. The constellation points represent the (b3b2b1b0) symbols as output from the byte-to-symbol mapping.

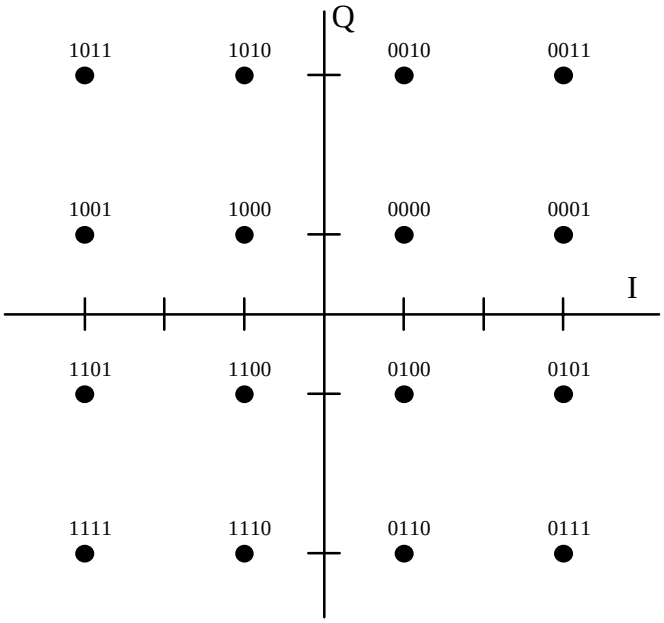

Figure 7.11-11 - 16 QAM Constellation diagram

7.11.1.10 QPSK and 16-QAM Modulation

The Table 7-46 shows the general specifications for the Physical Interface between the Radio Frequency Unit (RFU) and the UPI/STB at the physical connector of the UPI/STB.

 © ISO/IEC 1999 - All rights reserved

Copyright International Organization for Standardization
Provided by IHS under license with ISO
No reproduction or networking permitted without license from IHS
Not for Resale

Table 7-46 - Specifications for the Physical Interface

Modulation	Grade / Modulations A / QPSK B / QPSK and 16-QAM A modulator (transmitter) shall support at least one of the modulations. A demodulator (receiver) shall support A or B grade of modulations.
Channel Spacing	≥ 20 MHz, 1 MHz steps
Channel Bandwidth	20 - 40 MHz
Receive IF Uncertainty	± 5 MHz
Frequency Range	950 - 2050 MHz. The receiver shall operate over the entire specified frequency range.
Symbol Rate	14.81 - 33.33 Mbaud in 8 kbaud units
Transmitted Spectrum	Square root raised cosine approximation. Roll-off factor: α = 0.20 or 0.35. Note: A transmitter shall support at least one of the two values for the roll-off factor, while the receiver shall support both values.
Impedance	75 Ω
Receive Level at the IF Physical Interface input	-60 to -30 dBm
Adjacent Channel level variation	± 2 dB
Return Loss	≥ 13 dB (in-band)
In-band Flatness	± 0.5 dB
Phase Noise	The phase shall not exceed the levels given in Table 7-47.
Spectral Inversion	The receiver shall accept an input spectrum that is either inverted or noninverted. This allows for either high-side or low-side local oscillator injection when upconverting at transmitter side.

Table 7-47 - Maximum Phase Noise Levels

	QPSK Modulation		16QAM Modulation	
Frequency Offset [kHz]	At RFU Input [dBc/Hz]	At UPI/STB Input [dBc/Hz]	At RFU Input [dBc/Hz]	At UPI/STB Input [dBc/Hz]
1	-51	-41	-57	-47
10	-81	-71	-87	-77
50	-99	-92	-105	-98
100	-99	-95	-105	-101
500	-109	-104	-115	-110
1000	-115	-110	-121	-117
2000	-121	-116	-127	-122

7.11.1.11 Baseband filter characteristics

Prior to modulation, the I and Q signals shall be square-root raised cosine filtered. The roll-off factor shall be 0.20 or 0.35. The square-root raised cosine filter shall have a theoretical function defined by the following expression:

Copyright International Organization for Standardization
Provided by IHS under license with ISO
No reproduction or networking permitted without license from IHS Not for Resale

$$\begin{cases} H(f) = 1 & for\ |f| < f_N(1-\alpha) \\ H(f) = \left\{\frac{1}{2} + \frac{1}{2}\sin\frac{\pi}{2f_N}\left[\frac{f_N - |f|}{\alpha}\right]\right\}^{1/2} & for\ f_N(1-\alpha) \le |f| \le f_N(1+\alpha) \\ H(f) = 0 & for\ |f| > f_N(1+\alpha) \end{cases}$$

where $f_N = \frac{1}{2T_s} = \frac{R_s}{2}$ is the Nyquist frequency

and roll-off factor α = 0.20 or 0.35.

A transmitter shall support at least one of the two values for the roll-off factor, while the receiver shall support both values.

7.11.1.12 Transmit spectral mask

The transmit power spectral mask shall be applied at the LMDS transmitter side in order to provide minimum spectrum emission and interference with adjacent channels.
Recommended values for the Power Spectral Mask are listed in Table 7-48 (informative values). The Power Spectral Mask is applied symmetrically around the carrier frequency (f_c).

Table 7-48 - Recommended Downstream Transmitter Power Spectral Mask.

$\lvert (f - f_c) / f_N \rvert$	QPSK Response [dB]	16QAM Response [dB]	Tolerance [dB]
≤ 1-α	0	0	± 0.25
at 1	-3	-3	± 0.5
at 1+α	< -22	< -24	-
at 2-α	< -30	< -36	-
≥ 2	< -32	< -40	-

The transmit filter when convolved with itself shall have a carrier to intersymbol interference ratio of greater than 30 dB.

7.11.1.13 Information bit rate

This system employs different channel bandwidths and different convolutional encoder rates and so the range of information bit rate is wide.
Informative: Table 7-49 shows some possible solution for 20 and 40 MHz channel bandwidths.

Table 7-49 - Examples of useful bit rate for 20 and 40 MHz channel bandwidths [Informative]

Channel bandwidth	Symbol rate [Mbaud/s]	Useful bit rate [Mbit/s]				
		rate 1/2	rate 2/3	rate 3/4	rate 5/6	rate 7/8
20 MHz	16.67	15.36	20.48	23.04	25.60	26.88
40 MHz	33.33	30.72	40.96	46.08	51.20	53.76

Note: These values are evaluated for a roll-off factor value of 0.2 with QPSK modulation.

7.11.1.14 Transmission Convergence Layer

The downstream TDM frame range is between 3 and 6 msec. It means that, for example, a frame for 40 MHz bandwidth could be performed by 700 ATM cells or 175 MPEG-2 Transport Stream packets.

7.11.2 Upstream LMDS

The upstream TDMA frame length is equal to the downstream TDM frame length (3 to 6 msec). At the Access node upstream receiver, the upstream frame shall have a fixed delay relative to the downstream frame. The STB shall adjust timing of upstream packet transmissions to coincide with the upstream frame slot boundaries at the

 © ISO/IEC 1999 - All rights reserved

Copyright International Organization for Standardization
Provided by IHS under license with ISO
No reproduction or networking permitted without license from IHS
Not for Resale

Access node receiver, i.e., the STB shall achieve upstream symbol synchronization (with the Access node receiver) to a specified level of accuracy. There are two levels of upstream synchronization: (1) before net entry and (2) after net entry.
The maximum synchronization error before net entry is determined primarily by the STB uncertainty of two-way propagation delay, and the maximum uncertainty is determined by LMDS service cell radius. For STB net entry, Net management shall allocate multiple contiguous slots as needed to form longer net entry slots such that TDMA packet collisions caused by STB net entry transmissions are precluded. The net entry procedure shall provide for synchronization pull-in wherein the STB adjusts upstream time base in response to feedback of synchronization error estimated by the Access node. After net entry the STB upstream synchronization error shall be maintained at less than one upstream symbol in length (packet guard time is 4 symbols). The Access node shall provide periodic feedback of estimated upstream synchronization error to assist the STB in maintaining the specified synchronization accuracy after net entry.

7.11.2.1 Transmission Convergence Layer

The specified upstream time slot structure is shown in Figure 7.11-12. A slot is 68 bytes long, consisting of a preamble, one ATM cell, 10 Reed Solomon check bytes, and 1 byte of guard time for upstream synchronization error. The preamble shall be set to [00FCFCF3]hex and, unlike the other 64 bytes in the upstream time slot, the preamble shall not differentially encoded. This results in a preamble modulated on the carrier as a 16 symbol BPSK modulated Neuman-Hoffman sequence [0000 1110 1110 1101].
The one-byte guard time provides for upstream synchronization error after net entry. The preamble supports pull-in of upstream timing during net entry, as well as measurement of upstream timing error to support maintenance of upstream synchronization after net entry.

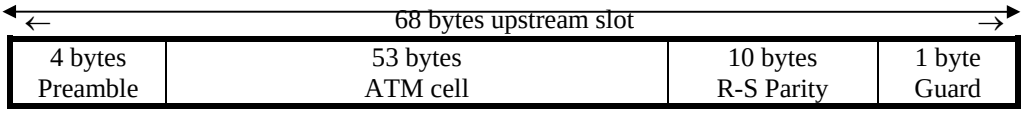

Figure 7.11-12 - Upstream Time Slot Structure

The upstream frame consists of F slots where F depends on the upstream modulation rate used. The F slots of a frame are partitioned into polling slots, contention slots, and traffic slots. The relative number of these three types of slots are dynamic at the discretion of the slot assignment functions, under the constraint that their total is F.
In the case of ATM transport, a downstream time slot consists of one ATM cell. The relationship of downstream time slots to upstream time slots must satisfy the following equation:

$$\frac{N_u \cdot 68 \cdot 8}{R_u \cdot 2} = \frac{N_D \cdot 204 \cdot 8 \cdot \frac{2}{7}}{R_D \cdot 2}$$

where R_U is the upstream channel symbol rate, N_U is the number of upstream time slots (ATM cells), and R_D is the downstream symbol rate after Viterbi decoding N_D is the number of downstream time slots (ATM cells).

Copyright International Organization for Standardization
Provided by IHS under license with ISO
No reproduction or networking permitted without license from IHS Not for Resale

Table 7-50 - Example Downstream/Upstream Framing Relationship (ATM Case)

Description		Units	Description		Units
Frame Period	5.819	ms	Frame Period	5.819	ms
Time Slots per Frame	728.0		Time Slots per Frame	24.00	
ATM Cell Rate	125102	cells/s	ATM Cell Rate	4124	cells/s
ATM Rate	53.043	Mbit/s	ATM Rate	1.749	Mbit/s
Time Slot Efficiency	371/376		Time Slot Efficiency	63/68	
Bit Rate	53.7582	Mbit/s	Bit Rate	1.8875	Mbit/s
Reed Solomon Efficiency	188/204		Reed Solomon Efficiency	53/63	
Reed Solomon Bit Rate	58.3333	Mbit/s	Channel Bit Rate	2.2436	Mbit/s
Convolutional Code Efficiency	7/8		R_{sd}/R_{su}	26	
Channel Bit Rate	66.6667	Mbit/s	QPSK Modulation	2	
QPSK Modulation	2	bit/symbol	Channel Symbol Rate	1.1218	Mbaud
Channel Symbol Rate	33.3333	Mbaud	Excess Bandwidth	0.3000	
Excess Bandwidth	0.2000		Channel Bandwidth	1.4583	MHz
Channel Bandwidth	40.0000	MHz	Available Bandwidth	300.0000	MHz
Available Bandwidth	850.0000	MHz	Number of Channels	205.71	
Number of Channels	21.25				

In the case of MPEG-2-TS transport, a downstream time slot consists of one MPEG-2-TS packet. The relationship of downstream time slots to upstream time slots must satisfy the following equation:

$$\frac{N_u \cdot 68 \cdot 8}{R_u \cdot 2} = \frac{N_D \cdot 204 \cdot 8}{R_D \cdot 2}$$

where R_U is the upstream channel symbol rate, N_U is the number of upstream time slots (ATM cells), and R_D is the downstream symbol rate after Viterbi decoding N_D is the number of downstream time slots (MPEG-2-TS packets).

Table 7-51 - Example Downstream/Upstream Frame Relationship (MPEG-2-TS Case)

Downstream Description		Units	Upstream Description		Units
Frame Period	5.819	ms	Frame Period	5.819	ms
Time Slots per Frame	208.0		Time Slots per Frame	24.00	
MPEG Packet Rate	35743	pack/s	ATM Cell Rate	4124	cells/s
MPEG Bit Rate	53.7582	Mbit/s	ATM Rate	1.749	Mbit/s
Time Slot Efficiency	1		Time Slot Efficiency	63/68	
Bit Rate	53.7582	Mbit/s	Bit Rate	1.8875	Mbit/s
Reed Solomon Efficiency	188/204		Reed Solomon Efficiency	53/63	
Reed Solomon Bit Rate	58.3333	Mbit/s	Channel Bit Rate	2.2436	Mbit/s
Convolutional Code Efficiency	7/8		R_{sd}/R_{su}	26	
Channel Bit Rate	66.6667	Mbit/s	QPSK Modulation	2	bit/symbol
QPSK Modulation	2	bit/symbol	Channel Symbol Rate	1.1218	Mbaud
Channel Symbol Rate	33.3333	Mbaud	Excess Bandwidth	0.3000	
Excess Bandwidth	0.2000		Channel Bandwidth	1.4583	MHz
Channel Bandwidth	40.0000	MHz	Available Bandwidth	300.000	MHz
Available Bandwidth	850.0000	MHz	Number of Channels	205.71	
Number of Channels	21.25				

7.11.2.2 Physical Medium Dependent Sublayer

The coding and modulation of upstream packets is summarized in the block diagram in Figure 7.11-13.
The upstream ATM cell received from the transmission convergence layer shall be randomized for spectral shaping with a randomizer, and the randomized ATM cell shall be encoded for forward error correction by a Reed Solomon RS(63,53) code with 8-bit code symbols. The 4-byte sync preamble shall be appended to the ATM cell and the resultant coded packet is mapped into I/Q baseband pulses to effect differentially encoded QPSK. The baseband modulation pulses shall be filtered with root-raised cosine filters having an excess bandwidth factor of $\alpha = 0.30$ and the packet data shall be burst modulated onto the upstream RF waveform into an assigned slot.

 © ISO/IEC 1999 - All rights reserved

Copyright International Organization for Standardization
Provided by IHS under license with ISO
No reproduction or networking permitted without license from IHS
Not for Resale

The preceding operations at the subscriber node for upstream transmission shall be reversed at the Access node end for reception of upstream burst transmissions.

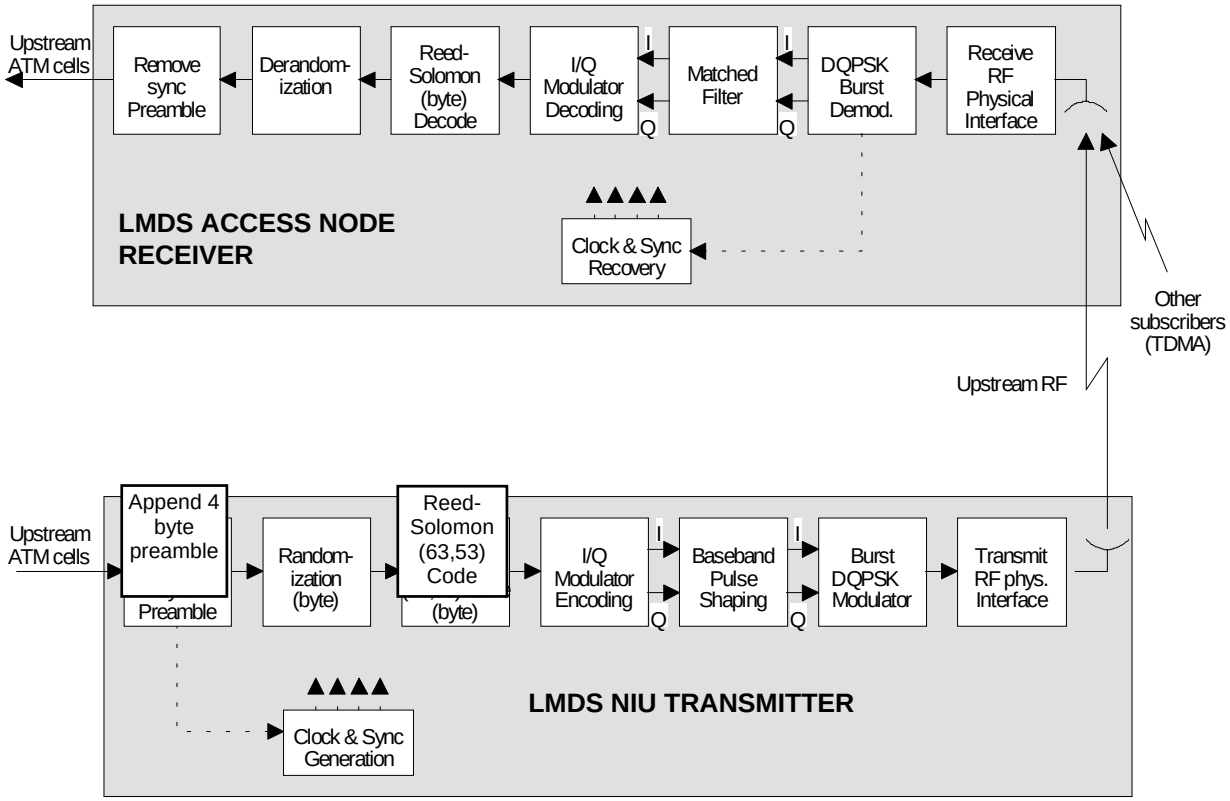

Figure 7.11-13 - Upstream Data Flow

7.11.2.2.1 Randomization for spectrum shaping

For the upstream packet, only the ATM cell of the packet shall be randomized. The randomizer shall be the linear feedback shift register (LFSR) with generating polynomial $x^6 + x^5 + 1$. The initial contents of the register shall be all ones, and the LFSR shall be reset to initial condition at the beginning of each ATM cell. At the upstream receiver, the complementary self-synchronizing feed-forward linear shift register derandomizer shall be used.

7.11.2.2.2 Reed-Solomon coding

Reed Solomon coding shall be applied to each randomized ATM cell. The code shall be the shortened systematic Reed-Solomon code RS(63,53,t=5). The specified code generator polynomials are given by

Code Generator Polynomial: $g(x) = (x+\mu^0)(x+\mu^1)(x+\mu^2) \ldots (x+\mu^9)$, where $\mu = 02\text{hex}$

Field Generator Polynomial: $p(x) = x^8 + x^4 + x^3 + x^2 + 1$

The specified code has a block length of 255 bytes, and shall be configured as a RS(255,245, t=5) code with information bits preceded by 192 zero symbols. The resultant code will correct t=5 byte errors in each code word.

7.11.2.2.3 Modulation

The specifications which shall apply to QPSK modulation for the upstream channel are given in Table 7-52.

Copyright International Organization for Standardization
Provided by IHS under license with ISO
No reproduction or networking permitted without license from IHS Not for Resale

Table 7-52 - Specifications for DQPSK Modulation (Upstream)

Modulation	Differentially encoded QPSK
Differential Encoding	Bytes entering the byte-to-symbol encoder are divided into four bit pairs, each bit pair generating one QPSK symbol. Byte boundaries coincide with bit pair boundaries: that is, no bit pairs overlap two bytes. The bit pair corresponding to the MSBs of the byte is sent first. Within each bit pair, the more significant bit is referred to a 'A' and the less significant as 'B'. The differential encoder shall accept bits A,B in sequence and generate phase changes as follows: A B Phase Change 0 0 none 0 1 +90 degrees 1 1 180 degrees 1 0 -90 degrees
Preamble	The Preamble is four bytes: 00 FC FC F3 hex, transmitted in this order.
Signal Constellation	The outputs I, Q from the differential encoder map to the phase states as follows: 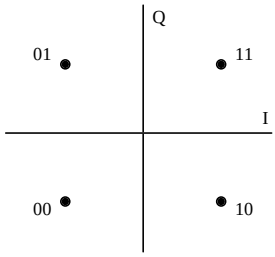 This constellation is used for the detection of the Preamble, which is not differentially encoded.
Transmission Rates	Integer divisors of the downstream symbol rate after Viterbi decoding
Transmit Filtering	Root raised cosine filtering, roll-off factor $\alpha = 0.30$

 © ISO/IEC 1999 - All rights reserved

--`,,```,,,,````-`-`,,`,,`,`,,`---
Copyright International Organization for Standardization
Provided by IHS under license with ISO
No reproduction or networking permitted without license from IHS
Not for Resale

Data Randomization	The Preamble shall be sent in the clear. Before addition of the FEC bytes (to be calculated over the randomized ATM cell), randomization shall apply only to the 53-byte ATM cell, with the randomizer performing modulo-2 addition of the data with a pseudo-random sequence. The generating polynomial is $x^6 + x^5 + 1$ with seed all ones. FEC bytes shall be calculated over the randomized 53-byte ATM cell. Byte/serial conversion shall be MSB first. The 424-bit binary sequence generated by the shift register starts with 00000100… The first "0" is to be added to the first bit after the Preamble. Randomizer: 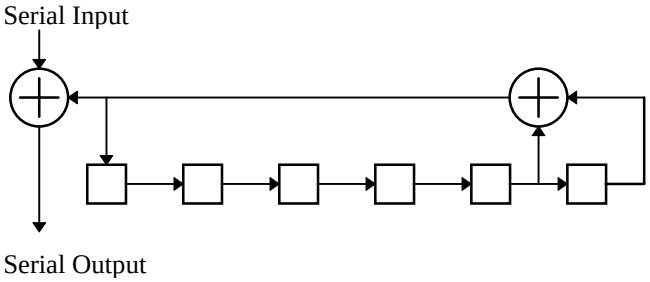 A complementary non self-synchronizing derandomizer is used in the receiver to recover the data. The derandomizer shall be enabled after detection of the Preamble. Derandomizer: 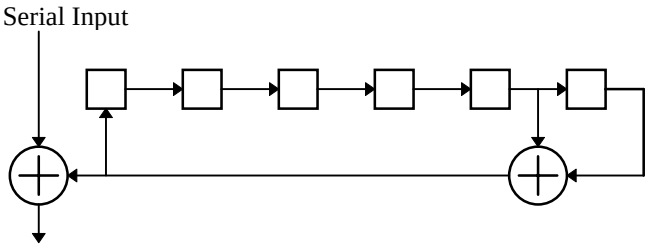
Frequency Range	Region Dependent (above 10 GHz)
Frequency Resolution	≤ 500 Hz
Transmitter Power Spectral Mask	The Transmitter Power Spectral Mask shall comply to the values given in Table 7-53. The transmit filter when convolved with itself shall have a carrier to intersymbol interference ratio of greater than 30 dB.
Carrier Suppression	> 30 dB
I/Q Amplitude Imbalance	< 1 dB
I/Q Phase Imbalance	< 2.0 degrees

Table 7-53 - QPSK Upstream Transmitter Power Spectrum Mask.

$\lvert (f - f_c) / f_N \rvert$	Response [dB]	Tolerance [dB]
≤ 1-α	0	± 0.25
at 1	-3	± 0.5
at 1+α	< -22	-
at 2-α	< -30	-
≥ 2	< -32	-

7.11.2.2.4 Specifications for the IF Interface

The Downstream Physical Interface applies to the intermediate frequency (IF) interface between the Radio Frequency Unit (RFU) and the UPI/STB as measured at the UPI/STB connector. Specifications for the Upstream Physical Interface is shown in Table 7-54 and applies to the same IF interface.

© ISO/IEC 1999 - All rights reserved

Copyright International Organization for Standardization
Provided by IHS under license with ISO
No reproduction or networking permitted without license from IHS
Not for Resale

Table 7-54 - Specifications for the Physical Interface (Upstream)

Upstream Frequency	400 to 700 MHz The transmitter shall operate over the entire specified frequency range.
Upstream signal level	-40 to -10 dBm
Transmission mask (Rejection after burst transmission)	-30 dB below the nominal level after the guard interval -40 dB below the nominal level after a 10 packet length -50 dB below the nominal level after a 100 packet length -60 dB below the nominal level after a 1000 packet length
Channel Spacing	Nx100 kHz, N≥9
Channel Bandwidth	Grade A 1 - 2.5 MHz Grade B 1 - 26 MHz
Phase Noise	The phase noise shall not exceed the maximum levels shown in Table 7-55.
Frequency Resolution	≤ 500 Hz
DC power Note: this power must be supplied by the NIU and is not provided over the A0 interface.	24 - 36 Vdc, $Power_{Available}$ > 36 W (ON/OFF selectable) Note: The RFU manufacturer is free to allocate the available power either with emphasis on long cable extension (example, at 24 V: 40 m of RG6 cable with copper plated steel core - leaving 18W to be dissipated in the RFU), or emphasis on transmit power (example, at 24V: 25W for RFU dissipation - restricting the cable length to 15 m of RG6 with copper plated steel core).
Return Loss	≥ 13 dB (in-band)
Impedance	75 Ω
Physical Connector Type	F-type female

Table 7-55 - Maximum Phase Noise Levels

Frequency Offset [kHz]	At RFU Input [dBc/Hz]	At UPI/STB Input [dBc/Hz]
1	-41	-51
10	-71	-81
50	-92	-99
100	-95	-99
500	-104	-109
1000	-107	-112
2000	-110	-115

7.11.3 MAC Protocols and Scenarios

7.11.3.1 Introduction

This section describes the messages for establishing, maintaining, and managing the physical wireless media for communication between an AIU (Air Interface Unit) at the head-end access node and an NIU (Network Interface Unit) at the subscriber premises. Examples of scenarios such as an NIU entering the network or requesting more resources are given. The messages can be combined in a sequence that would create another scenario and, thus, the scenarios given are not to be interpreted as the only possible scenarios. However, the scenarios given show the sequence of messages that shall occur for the given scenarios. The messages given are the exact specification of the messages between the AIU and NIU across the A1 interface that may be transmitted as the MAC flow. Higher layer flows are not addressed here. Only the messages for set-up of the connections for carrying those higher layer flows are defined here.

The MAC flow is bi-directional supported by modems at the AIU and NIU. Messages may be sent downstream to the NIU or upstream to the AIU. In the case of ATM transport, both the downstream and upstream frames are divided into time slots that encapsulate exactly one ATM cell. In the case of MPEG-2-TS transport, the downstream frame is divided into time slots that encapsulate one MPEG-2-TS packet and the upstream frame is divided into time slots which encapsulate one ATM cell. The modulators at the AIU transmit one or more downstream frequency channels. However, only one downstream frequency channel may be received by the NIU at any instance. The NIU may switch to a different downstream frequency channel, but this switch may require

 © ISO/IEC 1999 - All rights reserved

Copyright International Organization for Standardization
Provided by IHS under license with ISO
No reproduction or networking permitted without license from IHS Not for Resale

time on the order of many time slots. Likewise, the NIU is only capable of transmitting on one upstream frequency channel at an instance in time. However, the NIU may be capable of transmitting on one frequency channel for one time slot and transmit on a different frequency channel for the following time slot.
In the case of ATM transport the MAC flow uses ATM layer encapsulation for all messages. In the case of MPEG-2-TS transport, the MAC flow uses MPEG-2-TS packet encapsulation for all messages.

7.11.3.2 MAC Control Message Structure when Transmitting ATM Cells

The downstream MAC Control Message structure that is utilized when the downstream channel is carrying ATM cells is shown in Figure 7.11-14. With ATM transport, the Access node transmits a Frame_Start AAL5 PDU with VPI/VCI=0xFF/0xFFFF once per frame period. MAC messages can also be sent on individual MAC VCs (0xFF/niu_id) to minimize processing by each NIU/STB. Note that the first cell of the Frame_Start PDU does not have to occur as the first cell of a two MUX packet sequence.

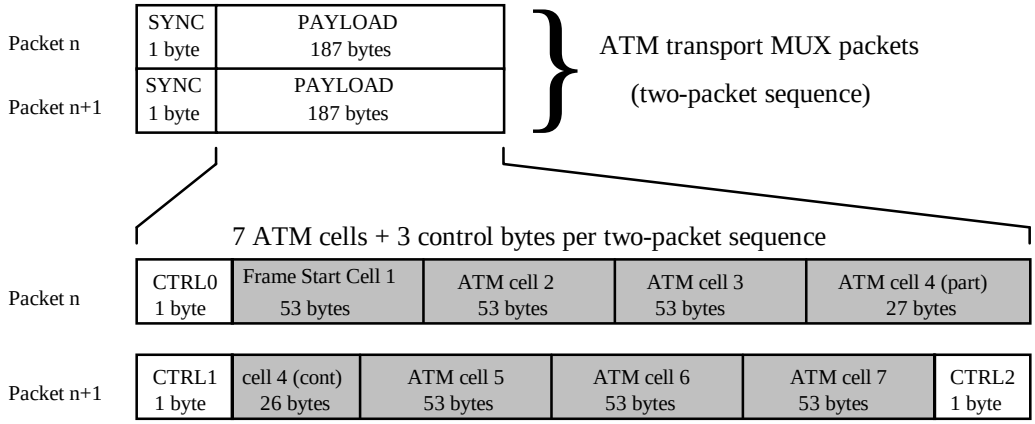

Figure 7.11-14 - Downstream MAC Control Message structure (ATM structure)

The protocol stack for ATM transport based systems is shown in Figure 7.11-15 and Figure 7.11-16. Downstream MAC messages are reassembled out of MPEG-2-TS packets and processed in the NIU/STB. The MAC layer communicates through a Layer Management function to the Transmission Convergence layer to configure such items as the upstream reserved time slot allocation, etc. The MAC layer also communicates to the Physical Medium Dependent Layer to configure the upstream and downstream modulation and FEC parameters and to apply timing, frequency, and power corrections for upstream transmissions.

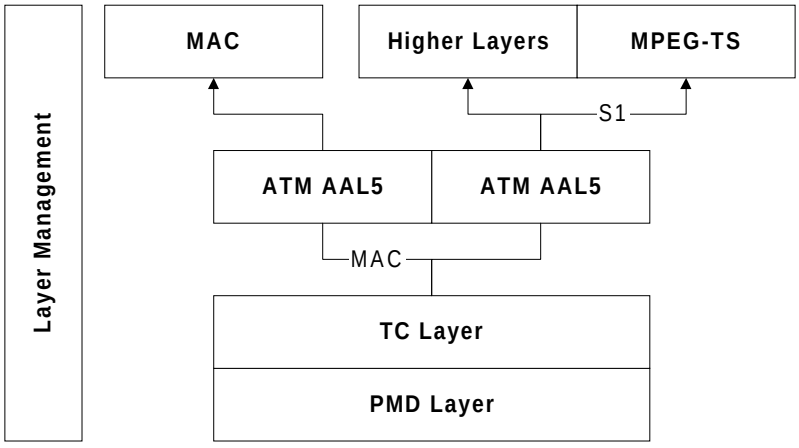

Note: Higher Layers and MPEG-2-TS on ATM AAL5 are shown as an informative example.

Figure 7.11-15 - Downstream MAC Protocol Reference Model, ATM Transport

Copyright International Organization for Standardization
Provided by IHS under license with ISO
No reproduction or networking permitted without license from IHS Not for Resale

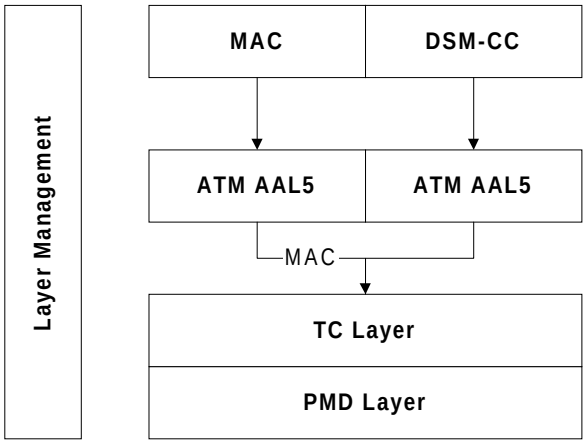

Note: DSM-CC on ATM AAL5 is shown as an informative example.

Figure 7.11-16 - Upstream MAC Protocol Reference Model, ATM Transport

7.11.3.3 MAC Control Message Structure when Transmitting MPEG-2-TS Packets

In the case of an MPEG-2-TS based system, the MAC messages are carried in a MAC PID. MAC messages may span more than one MPEG packet in which case the NIU/STB processor must perform reassembly. Receipt of the first MAC MPEG packet shall be used to synchronize the upstream frame. Because MAC messages will be inserted into the MPEG-2-TS by the final MPEG multiplexer stage, it cannot be guaranteed that the interarrival time between the first MAC packets of each frame will be constant. As a result, each MAC packet shall include a time stamp that will be inserted at the MAC Layer between the MPEG multiplexer and the modulator (see Section 7.11.3.4.4 for the time stamp syntax definition).
The MAC Control Message structure that is utilized when the downstream QAM channel is carrying MPEG-2-TS packets is shown in Figure 7.11-17. The MPEG Header is the 4 byte MPEG-2 Transport Stream Header as defined in ISO/IEC 13818-1 with a specific PID designated for MAC messages.

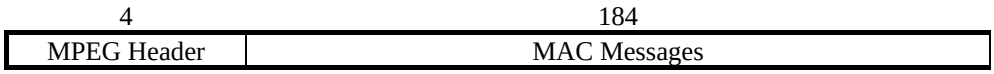

Figure 7.11-17 - MAC downstream message structure (MPEG-2-TS format)

The protocol stack for MPEG-2-TS based systems is shown in Figure 7.11-18 and Figure 7.11-19. Downstream MAC messages are reassembled out of MPEG-2-TS packets and processed in the NIU/STB. The MAC layer communicates through a Layer Management function to the Transmission Convergence layer to configure such items as the upstream reserved time slot allocation, etc. The MAC layer also communicates to the Physical Medium Dependent Layer to configure the upstream and downstream modulation and FEC parameters and to apply timing, frequency, and power corrections for upstream transmissions.

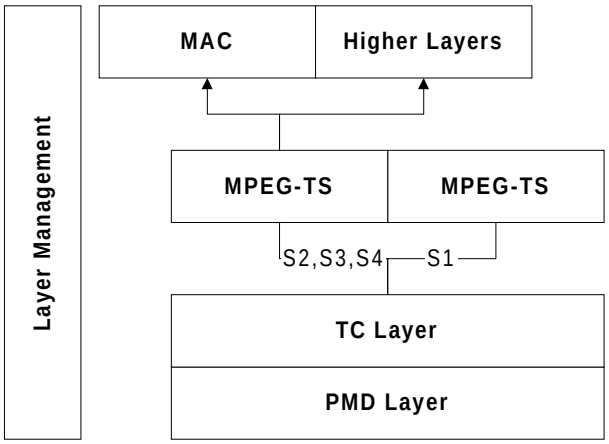

Figure 7.11-18 - Downstream MAC Protocol Reference Model, MPEG-2-TS Transport

 © ISO/IEC 1999 - All rights reserved

Copyright International Organization for Standardization
Provided by IHS under license with ISO
No reproduction or networking permitted without license from IHS
Not for Resale

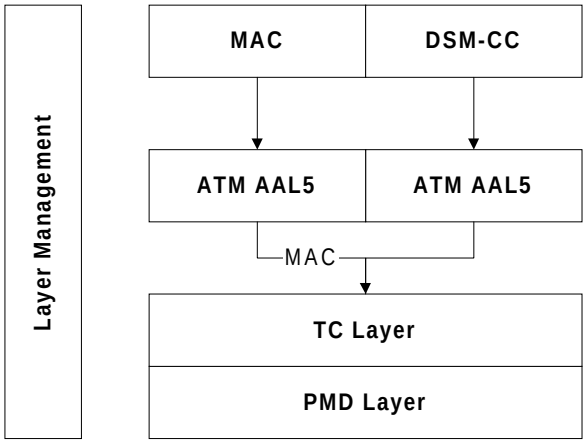

Note: DSM-CC on ATM AAL5 is shown as an informative example.

Figure 7.11-19 - Upstream MAC Protocol Reference Model, ATM Transport

7.11.3.4 Time Slot Types

7.11.3.4.1 ATM Transport

The downstream scheme is time division multiplex and the time slot types are divided into frame start slots and random access slots. The upstream scheme is Time Division Multiple Access and the time slot types are divided into polling response slots, contention slots, and reserved time slots. All MAC messages shall be encapsulated within ATM cells that shall use the UNI cell header format. The AIU shall not send more than 7 percent of the frame, which is about 50 cells per 6msec frame for a downstream bit rate of 51 Mbit/s, encapsulating MAC PDUs to any one NIU in order to set a limit on the amount of processing required by the NIU/STB. These cells, which contain MAC PDUs, include those broadcast via frame start to all NIUs and cells directed to a specific NIU. The poll [P] time slots sent from the NIU only contain MAC messages. The contention [C] time slots sent from the NIU may carry MAC messages or higher layer data. Reserved time slots sent from the NIU carry voice/data, ATM cells and OAM control message cells. Since the random access time slots downstream and the reserved time slots upstream shall transport higher layer data over an ATM virtual connection, these time slots are referenced as [NIU].

7.11.3.4.2 MPEG-2-TS Transport

For an MPEG-2-TS based system, the random access time slots carry PES information in MPEG-2-TS packets. The MAC messages sent to a specific NIU utilize an niu_id in the header for each 48 byte message. The 48 byte messages are encapsulated within the payload of the MPEG-2-TS MAC packet. The AIU shall not send more than 7 percent of the frame which is about 14 MPEG-2-TS packets at a downstream bit rate of 51 Mbit/s.

7.11.3.4.3 Acronyms

FS: Frame Start Time Slot or Frame Start MAC message
FS.P: Polling Request Type with Non-zero Poll_slot_id
C: Contention Time Slot
P: Poll Response Time Slot
NIU: Virtual (Asynchronous)

7.11.3.4.4 Downstream Time Slots

Frame Start Time Slot
In ATM-based systems, the first frame start time slot [FS] always occurs on the first time slot in the downstream frame in order that the NIU may determine the beginning of the downstream frame and synchronize its upstream frame to it. This time slot always encapsulates the first cell of a single or multi-cell AAL5 SDU. The AAL5 SDU

Copyright International Organization for Standardization
Provided by IHS under license with ISO
No reproduction or networking permitted without license from IHS Not for Resale

is referenced as FS. The VPI/VCI of the FS is always 0xFF/0xFFFF to flag that the SDU is the frame start. An AAL5 SDU with the VPI/VCI of frame start shall only occur once in a frame as the first AAL5 SDU in the frame. For MPEG-2-TS based systems, the MPEG multiplexer will, in general, not guarantee that the interarrival period between Frame_Start messages. As a result, a time stamp must be added to indicate the delay to the beginning of the next upstream frame. This is the purpose of **upstream_frame_delay** which is a 32 bit unsigned field. On receipt of the first packet of a Frame_Start on the MAC PID, the NIU starts a timer which counts downstream symbol clocks on the Reed-Solomon decoder output. The upstream_frame_delay represents the terminal count value for this value. In MPEG-2-TS based systems, it is anticipated that the value for the **upstream_frame_delay** will be overwritten by the downstream TC layer which will be inline between the MPEG multiplexer and the modulator and will snoop for the first MPEG-2-TS packet with a MAC PID.
For ATM-based systems, use of the **upstream_frame_delay** field is not required. If not used, it shall be set to a value of zero.
A non-zero poll_slot_id flags that an NIU is being polled and should respond in a polling response time slot [P]. The niu_id field in the message identifies which NIU is being polled. Often, one of the polling request messages is a status_request message. Following the polling request messages, the AIU typically sends a feedback message providing feedback to the NIU that is designated by the niu_id in the message. The polling requests are referred to as FS.P. The AIU may fill the remaining bytes of the frame start with any MAC message, but shall adhere to the following limitations. MAC PDUs to be transmitted on downstream frame n which is designated by frame start frame number n, shall be transmitted to the NIU no later than the first 7 percent of frame n+1. (See time slot allocation messages.) In order to still be able to assign time slots synchronous to the downstream frame start, the MAC messages must be able to designate time slots synchronous to the frame start. Thus, the first field in each frame start shall be an 8-bit **frame_num** which shall be referenced by synchronous time slot allocation messages. Since the absolute frame number is not specified in the polling request, and the polling response time slot allocation must be synchronous, all polling requests shall be in the frame start PDU.

Frame_Start() [FS] {	Bits	Bytes	Bit Number / Description
upstream_frame_delay	**32**	**4**	
frame_num	**8**	**1**	0-255
MAC_message()			
}			

The **upstream_frame_delay** is the delay from the downstream frame to the upstream frame in units of downstream Reed-Solomon symbols.

7.11.3.4.5 Random Access Time Slots

The random access slots [NIU] are all the time slots in the downstream frame except the frame start time slots. This is all the downstream time slots except the first time slots in the frame. The AIU may transmit on any of these time slots whenever it has any cells that need to be transmitted to an NIU. The cells may be OAM cells or part of an adaptation layer SDU, e.g. AAL5. The random access slots are referenced by the symbol NIU because they are utilized in a more true ATM sense rather than being synchronous or semi-synchronous due to physical layer constraints because these are the only downstream time slots on which higher layer cells may be transmitted on a virtual connection.

Downstream Frame

The following table illustrates the downstream frame with N time slots per frame. The frame start time slots always start in the first time slot. All other time slots in the frame are available for the AIU to transport time division multiplexed virtual connection.

Slot #	AIU
1	[FS]
2	[NIU]
3	[NIU]
.	.
.	.
.	.
N	[NIU]

 © ISO/IEC 1999 - All rights reserved

Copyright International Organization for Standardization
Provided by IHS under license with ISO
No reproduction or networking permitted without license from IHS Not for Resale

7.11.3.4.6 Upstream Time Slots

Poll Time Slots
The poll time slots [P] are the time slots in the upstream frame that are allocated to only one or many NIU, but may only be utilized for a poll response after receiving a poll request from the AIU. The poll time slots may only encapsulate a single-cell AAL5 SDU whose payload shall only be MAC messages defined in this document. The VPI/VCI is always0xFF/niu_id.
Contention Time Slots
The contention time slots [C] are the time slots in the upstream frame that may be allocated to more than one NIU and, thus, utilizing the contention time slot may cause a collision with another NIU utilizing the same contention time slot. If a collision occurs, then the contention must be resolved via any number of well-known algorithms implemented in the NIU, such as random retransmission delays based on the niu_id, to determine how many frames the NIU shall wait before retransmission. The contention time slots may encapsulate a single-cell AAL5 SDU whose PDU may be MAC messages defined in this document, a single-cell AAL5 SDU consisting of higher layer data, or a cell of a multi-cell AAL5 SDU consisting of higher layer data. The NIU shall always use VPI/VCI 0xFF/niu_id for transmission of a MAC message PDUs and the VPI/VCI of the higher layer data on contention time slots.
Reserved Time Slots
The reserved time slots [NIU] are the time slots in the upstream frame that are allocated to only one NIU, i.e. they are reserved for use by one NIU. The NIU may transmit on any of these time slots whenever it has any cells that need to be transmitted to the AIU or across the A4 interface via the AIU. The cells may be OAM cells or part of an adaptation layer SDU, e.g. AAL5. The reserved time slots are referenced by the symbol NIU because they are utilized in a more true ATM sense rather than being synchronous or semi-synchronous due to physical layer constraints.

7.11.3.5 Message Structure and Message Types

The MAC messages all utilize the same basic structure as outlined below. Every message consists of the fields: niu_id, msg_length, poll_slot_id, msg_type, num_msg_items, and a list of the msg_items. Each message item table in this document describes the fields for the message items of the type designated by one of the message types in the message type table. The message header, i.e. the niu_id, msg_length, poll_slot_id, msg_type, and num_msg_items is not shown in these tables. Only one instance of the fields for a single item in the msg_items field of the message is given in each message item table. If in the message header the number of message items is greater than one, the message will contains more than one instance of the message item. All message fields are unsigned unless otherwise stated. The type of each field is sufficiently defined by the following message item tables in this document.

MAC_message () {	Bits	Bytes	Bit Number / Description
niu_id	**16**	**2**	
msg_length	**16**	**2**	
poll_slot_id	**8**	**1**	Designates poll response slot.
msg_type	**8**	**1**	Identifies the message type
num_msg_items	**8**	**1**	# of message items being sent
msg_items		**N**	Variable Length Field
}			

The **niu_id** is a unique identifier of a specific NIU in the polling list of NIUs for a group of downstream and corresponding group of upstream frequency channels on which the NIU may receive and transmit, respectively. An niu_id = 0xFFFF is used to indicate all NIUs, i.e. it is the “multi-cast” ID. In the case of ATM, the VC header may direct this message to only one NIU or may broadcast the message. In the case of MPEG-2-TS the broadcast/niu header directs this message to a specific NIU or broadcasts using niu_id=0xFFFF.
The **msg_length** indicates the number of bytes following the msg_length field in this message. This field makes it easier for an NIU to find the second message in the cell or AAL5 SDU. Note that the first message may be for one NIU, whereas the second message may be for a different NIU.
The **poll_slot_id** indicates which of the allocated polling response time slots shall be utilized on the upstream frame that is designated by the synchronous_time_slot_delay. A value of 0 indicates that the NIU is not being polled by this message, and this message is not enabling use of any of the polling response time slots.
The **msg_type** is one of the messages in the msg_type table.
The **num_msgs_items** is the number of items of the designated message type that are in the given instantiation of the message.
The **msg_items** is the list of items of the type designated by the msg_type.

--`,,```,,,,````-`-`,,`,,`,`,,`---
Copyright International Organization for Standardization
Provided by IHS under license with ISO
No reproduction or networking permitted without license from IHS Not for Resale

The following message type table lists the types of MAC messages in the order that they shall be enumerated (reservation_request is coded as msg_type = 0). Any message types added to this table in the future must be added at the end of the enumeration list to assure backwards compatibility. In the message type table, the slot type indicates the type of time slot in which the message of that type would most likely be encapsulated.

MAC_message_type	Slot Type	Delivery	Description
reservation_request	[C]	AIU←NIU/STB	NIU request for reserved time slots.
reserved_slot_allocation	[FS,NIU]	AIU→NIU/STB	Allocation/deallocation of reserved time slots.
contention_slot_allocation	[FS,NIU]	AIU→NIU/STB	Allocation/deallocation of contention time slots.
poll_slot_allocation	[FS,NIU]	AIU→NIU/STB	Allocation/deallocation of poll time slots.
sign_on_request	[FS]	AIU→NIU/STB	Parameters for an NIU to enter the network.
tx_calibration	[FS,NIU]	AIU→NIU/STB	NIU transmit freq, power, time corrections.
status_request	[FS,NIU]	AIU→NIU/STB	Request specified NIU status items.
status_response	[P]	AIU←NIU/STB	Requested NIU status items.
mac_session_request	[C]	AIU←NIU/STB	NIU request a session/control connection.
mac_session_connection	[FS,NIU]	AIU→NIU/STB	AIU assigns VPI/VCI for session connection.
mac_session_release	[FS,NIU]	AIU↔NIU/STB	AIU or NIU releases a session connection.
mac_session_msg_ack	[FS, NIU,C,P]	AIU↔NIU/STB	Acknowledgment of receipt of the 3 above msgs.
new_downstream_channel	[FS,NIU]	AIU→NIU/STB	Command NIU to enter net on new channel.
contention_slot_feedback	[FS]	AIU→NIU/STB	Contention slot stabilization feedback.

7.11.3.6 Idle Cell

The NIU shall transmit on every reserved time slot. If no data is available, an idle shall be transmitted. The AIU may deallocate reserved time slots for an NIU that is not utilizing the reserved time slots for data. The idle cells may be used to determine upstream transmit signal calibration corrections, upstream BER, reserved time slot utilization, and NIU acknowledgment of reserved time slot allocation/deallocation.

 © ISO/IEC 1999 - All rights reserved

Copyright International Organization for Standardization
Provided by IHS under license with ISO
No reproduction or networking permitted without license from IHS
Not for Resale

7.11.3.7 Upstream Time Slot Allocation

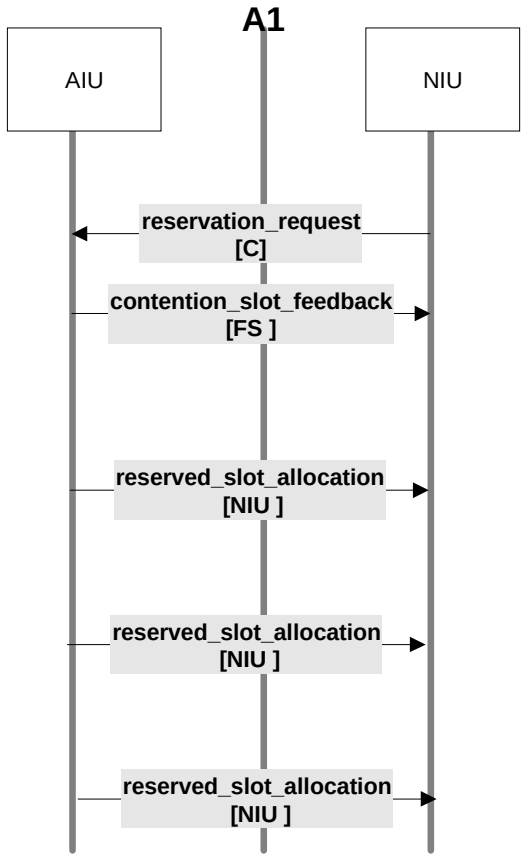

Figure 7.11-20 - Upstream Time Slot Allocation

The MAC upstream time slot allocation scenario depicts how reserved, contention, and polled time slots for transmitting upstream from the NIU are allocated and deallocated. The only difference in the scenario for each of the different type of time slots is that reserved time slots may be requested by the NIU, and the contention_slot_feedback message would serve to acknowledge the request. The contention and polled time slots are never requested by the NIU. The AIU decides which upstream frequency channels and time slots of those channels should be allocated to each NIU as a contention or polled time slot. The reserved time slot allocation differs from the contention and polled time slot allocation in that the NIU may request reserved time slots. However, the reserved times slots, like the contention and polled time slots, may be allocated by the AIU without a request from the NIU. The time slot allocation messages may be sent as an update of a previously sent message rather than a change of allocation. This is shown in the scenario. The three types of time slot allocation messages are also similar in structure. Each is designated by a different message type but the fields are identical.

reservation_request

reservation_request () {	Bits	Bytes	Bit Number / Description
num_time_slots	**8**	**1**	
min_VBR_packet_size	**16**	**2**	
}			

The **num_time_slots** indicates the number of reserved time slots requested by the NIU for user traffic. The AIU decides how many reserved time slots to allocate to the NIU. If the NIU still needs more reserved time slots, it will send another reserved slot request to the AIU. The NIU may send in this message the number of time slots that it believes that it needs or always set the num_time_slots field to 1.
The **min_VBR_packet_size** is the number of cells that are buffered at the NIU awaiting upstream transmission. Note that a cell in this case is considered to be 48-bytes.

Copyright International Organization for Standardization
Provided by IHS under license with ISO
No reproduction or networking permitted without license from IHS Not for Resale

reserved_slot_allocation

reserved_slot_allocation () {	Bits	Bytes	Bit Number / Description
time_slot_allocation ()			
}			

The reserved_slot_allocation message changes or updates the allocation of upstream reserved time slots for an NIU. The reserved time slots are the time slots typically used for higher layer user traffic. The NIU shall transmit an idle message cell on every reserved time slot for which the NIU does not have any data ready to transmit. After the NIU is initially calibrated and is allocated reserved time slots, the calibration correction parameters for the signal transmitted upstream from the NIU may be determined from the receipt of the reserved time slots.

contention_slot_allocation

contention_slot_allocation () {	Bits	Bytes	Bit Number / Description
time_slot_allocation ()			
}			

The contention_slot_allocation message changes or updates the allocation of upstream contention time slots for an NIU. Contention time slots may be used for user traffic. If upstream traffic is mostly bursty data traffic, then contention time slot demand for time slot requests may be high. In order to stabilize the contention time slot retransmission algorithm, the AIU must send a contention_slot_feedback message in every frame start that indicates the usage of the allocated contention time slots.

poll_slot_allocation

poll_slot_allocation () {	Bits	Bytes	Bit Number / Description
poll_slot_id	**8**	**1**	Designates poll response slot.
time_slot_allocation ()			
}			

The poll_slot_allocation message changes or updates the allocation of upstream polling response time slots for an NIU. Guard time slots are not allocated in the poll time slot allocation.
The **poll_slot_id** indicates which of the allocated polling response time slots shall be utilized on the upstream frame that is designated by the synchronous_time_slot_delay. A value of 0 indicates that the NIU is not being polled by this message, and this message is not enabling use of any of the polling response time slots. The synchronous_time_slot_delay is the number of upstream frames that the poll response shall be delayed. See the sign_on_request message for a description of the synchronous_time_slot_delay. For each new polling response time slot that is allocated via a downstream channel, a poll_slot_id shall be assigned by the AIU and indicated in the poll_slot_id field of this message. A poll_slot_id shall not be duplicated for slots on different upstream channel which are allocated via the same downstream channel. The poll_slot_id must be unique for all upstream time slots associated with a given downstream channel.

time_slot_allocation

time_slot_allocation () {	Bits	Bytes	Bit Number / Description
upstream_frequency	**16**	**2**	in steps of 100 kHz
frame_num	**8**	**1**	
time_slot_page	**8**	**1**	
num_frames	**8**	**1**	
change_field		**1**	
Reserved	7		7..1
is_change	1		0:{update, change}
num_time_slots	**8**	**1**	
for (i=0;i<num_time_slots;i++) {			
time_slot_number	**8**	**1**	allocate/deallocate indication
}			
}			

The time_slot_allocation field is common to all time slot allocation messages. A time_slot_allocation type message may be used to change or to update the allocation of any type of upstream time slots for an NIU. Each time slot is referenced by frequency channel and time slot page such that a single time slot is a single element in a 2-dimensional array.
The **upstream_frequency** designates the upstream at the NIU IF output in 100kHz steps.

 © ISO/IEC 1999 - All rights reserved

--`,,```,,,,````-`-`,,`,,`,`,,`---
Copyright International Organization for Standardization
Provided by IHS under license with ISO
No reproduction or networking permitted without license from IHS
Not for Resale

The **frame_num** is an 8-bit unsigned integer that indicates the first frame in which the time slot is being allocated. There shall be a limitation that time slot allocation messages sent on downstream frame n can only be allocating time slots for upstream frames n+1 or later, where upstream frame n is delayed from downstream frame n. Furthermore, the polling response time slot still may not be used until a polling request is received and the synchronous_time_slot_delay should still be used to determine in which frame the polling response time slot may be used by the NIU. For clarification, since the absolute frame number is not specified in the polling request, and the polling response time slot allocation must be synchronous, all polling requests must be in the frame start PDU.
The **time_slot_page** is an 8-bit unsigned integer designating the group of 128 time slots where 0 indicates time slots 0 through 127, 1 indicates time slots 128 through 255, etc.
The **num_frames** is an 8-bit unsigned integer indicating the number of upstream frames for which the NIU is allocated the time slots in the subsequent time slot list. This is set to 0 to mean that the time slots are being allocated indefinitely. The first time slot is in the frame designated during sign-on as the synchronous_time_slot_delay.
The **is_change** bit is a boolean indicating whether this message is allocating or deallocating time slots on the stated page of the frequency channel or is only an update which lists the time slots that are currently allocated for the NIU. The boolean is cleared for update, set for change.
The **num_time_slots** is an 8 bit unsigned integer indicating the number of time slots (from 0 to 127) that are in the following list for the channel and page.
The **time_slot_number** is an 8-bit signed integer that correspond to a time slot on the page. The first time slot is referred to as 0, and the last time slot on the page is referred to as 127. If the time slot number is positive (i.e. the MSB is cleared), then the time slot is allocated. If the time slot number is negative (i.e. the MSB is set), then the time slot is deallocated.

--`,,```,,,,````-`-`,,`,,`,`,,`---
Copyright International Organization for Standardization
Provided by IHS under license with ISO
No reproduction or networking permitted without license from IHS Not for Resale

Example Upstream Time Slot Allocation
The following table illustrates two consecutive upstream frames with ten time slots per frame. In this example, assume that the three NIUs transmit on only one upstream frequency channel and that the channel is the same for all three. A possible allocation of the three types of upstream time slots at an instant in time is shown. The polling response time slot is slot number one for all three NIUs. In this case, time slots 2 and 3 are not allocated and, thus, can be guard time slots. That is, if NIU #1 transmits late and actually the polling response is received at the AIU during time slot number 2, then the polling response does not interfere with any time slots allocated to other NIUs. Also, note that NIU #4 has not entered the network yet and, thus, has not yet been allocated any time slots other than the polling response time slot that is to be used for network entry.

Table 7-56 - Example Upstream Time Slot Allocation

slot #	NIU #1	NIU #2	NIU #3	NIU #4
1	[P]	[P]	[P]	[P]
2				
3				
4	[C]	[C]	[C]	
5			[C]	
6		[C]	[C]	
7			[NIU]	
8		[NIU]		
9			[NIU]	
10			[NIU]	
1	[P]	[P]	[P]	[P]
2				
3				
4	[C]	[C]	[C]	
5			[C]	
6		[C]	[C]	
7			[NIU]	
8		[NIU]		
9			[NIU]	
10			[NIU]	

7.11.3.8 Polling Handshake

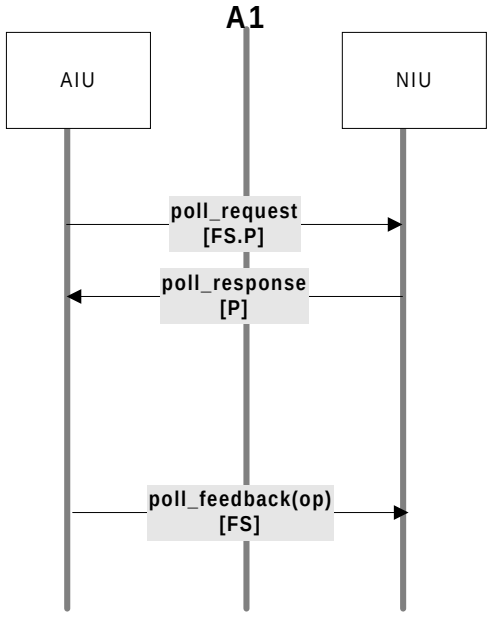

Figure 7.11-21 - Polling Handshake

 © ISO/IEC 1999 - All rights reserved

--`,,```,,,,````-`-`,,`,,`,`,,`---
Copyright International Organization for Standardization
Provided by IHS under license with ISO
No reproduction or networking permitted without license from IHS
Not for Resale

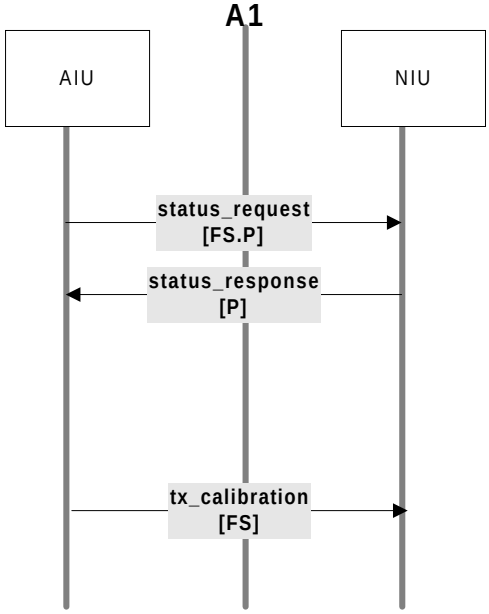

Figure 7.11-22 - Polling Handshake-Upstream Signal Calibration

The NIU shall be polled periodically to establish communication and maintain communication with the NIU. If no other messages are flowing from the AIU to the NIU, the AIU shall poll each NIU assigned to that AIU at an interval of less than or equal to 2 seconds. This is for proper upstream transmit signal calibration and to facilitate network entry both before the NIU has determined which downstream frequency is polling it and while waiting for configuration. The polling handshake is initiated by the AIU with a poll_request which shall be designated by the poll_slot_id field in the message header set to a non-zero value. The NIU responds on the upstream polling time slot that is referenced by the poll_slot_id in the message header and the AIU has allocated to the NIU. If the most recent poll request from the AIU does not include a poll_slots_allocation message in the frame, the NIU shall assume that the time slots allocated for the polling response are the same as indicated in the previous poll_slots_allocation messages that it received from the AIU. If more than one time slot in a frame period is allocated for polling, the NIU shall respond on the time slot that is referenced by the poll_slot_id. If the NIU is not aligned in time, the NIUs response may be received at the AIU during the time slots following the desired polling response time slot. Guard time slots must not be allocated by the AIU as reserved, contention or poll time slot for any NIU if the current NIU being polled is not time aligned. Only 1 polling time slot may need to be allocated otherwise. The guard time slots must follow the poll time slot. Also, the NIU must attempt to respond on the first time slot in order to do timing calculations. Polling of the NIUs that have not been calibrated, i.e. are entering the net, should be done consecutively so that the head-end can allocate the guard time slots for contention usage for the longest amount of time. The polling handshake may include a third message referred as poll_feedback. The poll_response may be a status_response message. Tx_calibration is a type of message that may be included as poll_feedback.

If the NIU/STB loses power, it may remember the assigned niu_id and resources, i.e. connections and time slots. If the NIU remembers its niu_id, it responds to messages from the AIU using that niu_id. Otherwise, the NIU must wait to receive a sign_on_request message. If the NIU does not remember its allocated resources, then it must not remember its niu_id, so that the lack of response to the niu_id indicates to the AIU that the resources allocated to the NIU are no longer valid for that NIU and should be released. The AIU shall declare that the NIU is not responding if the AIU has not received a response to a polling request for 10 seconds. Note that this assumes that the AIU is polling the NIU a minimum of every 2 seconds as stated in this document. If the lack of NIU response or lack of receipt of the response at the AIU is due to a temporary loss of communication versus a more catastrophic loss of power, then this 10 seconds interval accommodates most periods of communication loss. If, however, a communication loss is sustained for a period longer than 10 seconds, then the AIU shall transmit a sign_on_request message to the NIU with a different niu_id. The association of a new niu_id with the serial number in the sign_on_request message indicates to the NIU that the AIU has lost communication with the NIU and, thus, that the AIU has released the allocated resources for that NIU, and the NIU shall release its allocated resources. The AIU shall not transmit a new niu_id for an NIU via the sign_on_request message unless the AIU is releasing all the resources allocated for that NIU. For every new niu_id, the NIU shall perform the

--`,,```,,,,````-`-`,,`,,`,`,,`---

Copyright International Organization for Standardization
Provided by IHS under license with ISO
No reproduction or networking permitted without license from IHS Not for Resale

network entry process again. During a temporary communication loss, the NIU is not calibrated on the specified interval. Therefore, when communication is reestablished, the NIU may be unsatisfactorily calibrated such that the AIU must account for this.

The table below shows that many more downstream cells are transmitted for every upstream cell. The first downstream frame start cell is indicated by the shaded time slot. To the left of the downstream frame is an indication of which NIU is polled in the downstream frame start. Refer to the allocation of upstream time slots in the *Example Upstream Time Slot Allocation* in the *Time Slot Allocation* section of this document. The allocation of time slots in the allocation example is assumed in this example. Note that NIU #4 has not entered the network yet and, thus, its upstream transmit signal has not yet been calibrated. Thus, the polling response from NIU #4 is received on later time slots at the AIU than is allocated for NIU #4's polling response time slot. Also, note that the polling response by the NIUs are delayed by one upstream frame after the polling request is received. Furthermore, the upstream frame is received with an offset delay due to a constant path length difference between NIUs. So long as that difference is a constant, and does not vary between NIUs that may access the same upstream frame or frames, then this offset has no impact other than a delay.

 © ISO/IEC 1999 - All rights reserved

Copyright International Organization for Standardization
Provided by IHS under license with ISO
No reproduction or networking permitted without license from IHS Not for Resale

Table 7-57 - Example Polling Response Frame Delay

Downstream		Upstream slot #	
		5	NIU #3 [C]
[FS] Poll NIU#1		6	NIU #1 [C]
		7	NIU #3 [NIU]
		8	NIU #2 [NIU]
		9	NIU #3 [NIU]
		10	NIU #3 [NIU]
		1	[P]
		2	
		3	
		4	
		5	
[FS] Poll NIU #2		6	
		7	NIU #3 [NIU]
		8	NIU #2 [NIU]
		9	NIU #3 [NIU]
		10	NIU #3 [NIU]
		1	NIU #1 [P]
		2	
		3	
		4	NIU #3 [C]
		5	
[FS] Poll NIU #3		6	NIU #2 [C]
		7	NIU #3 [NIU]
		8	NIU #2 [NIU]
		9	NIU #3 [NIU]
		10	NIU #3 [NIU]
		1	NIU #2 [P]
		2	
		3	
		4	NIU #1 [C]
		5	
[FS] Poll NIU #4		6	
		7	NIU #3 [NIU]
		8	NIU #2 [NIU]
		9	NIU #3 [NIU]
		10	NIU #3 [NIU]
		1	NIU #3 [P]
		2	
		3	
		4	NIU #1,2 [C]
		5	NIU #3 [C]
[FS] Poll NIU #1		6	NIU #1 [C]
		7	NIU #3 [NIU]
		8	NIU #2 [NIU]
		9	NIU #3 [NIU]
		10	NIU #3 [NIU]
		1	
		2	NIU #4 [P]
		3	
		4	
		5	
[FS] Poll NIU #2		6	
		7	NIU #3 [NIU]
		8	NIU #2 [NIU]

© ISO/IEC 1999 - All rights reserved

Copyright International Organization for Standardization
Provided by IHS under license with ISO
No reproduction or networking permitted without license from IHS
Not for Resale

status_request

status_request () {	Bits	Bytes	Bit Number / Description
}			

This is for requesting status items from the NIU via the MAC protocol for status and control of the LDMS medium.

status_response

status_response() {	Bits	Bytes	Bit Number / Description
niu_tx_LO_offset	**8**	**1**	in steps of 1 kHz
niu_rx_LO_offset	**8**	**1**	in steps of 1 kHz
niu_tx_time_offset	**16**	**2**	in steps of half a downstream symbol
niu_tx_power	**8**	**1**	in steps of 0.2 dB below -10 dBm.
niu_rx_power	**8**	**1**	in steps of 0.2 dB below -30 dBm.
}			

The **niu_tx_LO_offset** is a signed integer with a resolution of 1 kHz where a positive value indicates that the LO for the transmitted signal is offset higher than the nominal LO value by this amount. This value includes any short loop, as well as, MAC controlled long loop corrections.
The **niu_rx_LO_offset** is a signed integer with a resolution of 1 kHz where a positive value indicates that the LO for the received signal is offset higher than the nominal LO value by this amount.
The **niu_tx_time_offset** is a signed integer with a resolution of a .5 downstream modulation symbol which equals 1 downstream sample clock period where a positive value indicates that the NIU is delaying its transmit, and a negative value indicates that the NIU is transmitting earlier than nominally expected.
The **niu_tx_power** is a negative integer with a resolution of 0.2 dB below -10 dBm.
The **niu_rx_power** is a negative integer with a resolution of 0.2 dB below -30 dBm.

tx_calibration

tx_calibration()	Bits	Bytes	Bit Number / Description
freq_offset_value	**8**	**1**	in steps of 1 kHz
time_offset_value	**16**	**2**	in steps of half a downstream symbol
power_offset_value	**8**	**1**	in steps of 0.2dB
}			

The offset values for the upstream transmit signal from the NIU are sent in this message.
The **freq_offset_value** is a signed integer with a resolution of 1kHz where a positive value indicates that the NIU should increase its frequency, and a negative value indicates that the NIU should decrease its transmit frequency.
The **time_offset_value** is a signed integer with a resolution of a 0.5 downstream modulation symbol which equals 1 downstream sample clock period where a positive value indicates that the NIU should delay its transmit, and a negative value indicates that the NIU should transmit sooner.
The **power_offset_value** is a signed integer with a resolution of 0.2 dB where a positive value indicates that the NIU should raise its power, and a negative value indicates that the NIU should lower it transmit power. In addition to these power offset values from the AIU, the NIU shall implement an automatic transmit power correction algorithm based on the downstream received signal. Poll requests do not need to be sent in order to determine the NIUs transmit signal offset values. This would be possible if the head-end is capable of determining timing, etc. adjustments from traffic time slots.

7.11.3.9 Network Entry

The AIU polls each of the NIUs on at least one of the downstream frequency channels in a group. Before the NIU enters the network, it may be polled on more than one downstream frequency channel from different channel groups, and a different niu_id may be used for each group. When the NIU attempts to enter the network, it acquires a downstream frequency channel and listens for the poll directed to it. Since the NIU has not entered the network, in order for the NIU to recognize that the poll is directed to it, the AIU sends the NIUs partial or full serial number along with the niu_id in the polling request message. One NIU may be polled more than once before another NIU is polled, so long as no other requirements are being violated. Since polls are not necessarily round robin, an NIU is not able to wait till the same niu_id comes around twice to in order to determine that it is not being polled on that downstream channel. Each NIU's transmit signal must be corrected on a regular basis, but a poll request type message is not necessary in order to send a transmit calibration message to the NIU. The transmit calibration message must be sent at least once every 2 seconds worst case. All NIUs that have not entered

 © ISO/IEC 1999 - All rights reserved

--`,,```,,,,````-`-`,,`,,`,`,,`---

Copyright International Organization for Standardization
Provided by IHS under license with ISO
No reproduction or networking permitted without license from IHS Not for Resale

the network but are assigned to be polled on the downstream frequently will be polled on that downstream frequency channel no less frequent than 2 seconds. If the NIU waits 2 seconds, but does not receive its serial number, it will acquire the next downstream frequency and again listen for its serial number. This process repeats until the NIU finds a downstream frequency channel on which it is being polled. Once the NIU finds its poll and, then, responds to the poll, the NIU is only polled by this one downstream frequency channel.
Guard time slots may need to follow the NIU poll response time slot until the NIU transmit signal is sufficiently time aligned, so that the poll response time slot sent by the NIU does not interfere with adjacent upstream time slots during the initial polling handshakes. Once the NIU is calibrated, contention and reserved time slots may be allocated, and MAC control sessions may be assigned and utilized. The AIU shall continue to poll the NIU to maintain upstream transmit signal calibration, even though there may be a temporary lack of user activity.

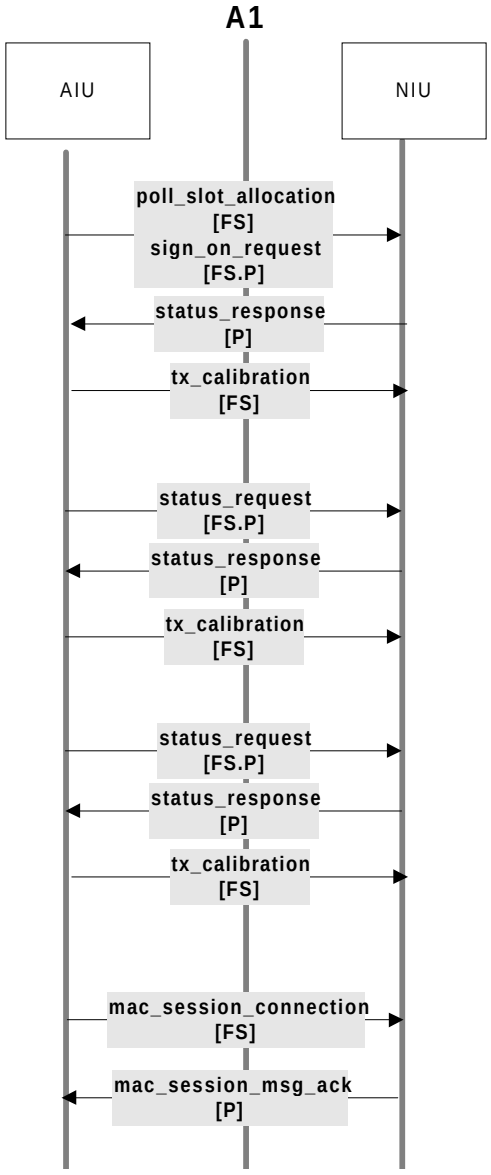

Figure 7.11-23 - Network Entry

--`,,```,,,,````-`-`,,`,,`,`,,`---

Copyright International Organization for Standardization
Provided by IHS under license with ISO
No reproduction or networking permitted without license from IHS Not for Resale

sign_on_request

sign_on_request() {	Bits	Bytes	Bit Number / Description
serial_no			
num_serial_no_bytes	**8**	**1**	Indicates N with N ≤ 20 bytes
serial_no_bytes		**N**	MS-byte first
upstream_signal_config			
symbol_rate_ratio	**8**	**1**	
upstream_frame_delay	**32**	**4**	
synchronous_time_slot_delay	**8**	**1**	
num_pwr_retries	**8**	**1**	
}			

The **sign_on_request** has two parts, the serial_no, which indicates to the NIU that it is assigned to the downstream frequency channel that is transmitting this message, and the upstream_signal_config, which is used by the NIU to configure it upstream transmitted signal.
The **num_serial_no_bytes** is an 8-bit unsigned integer indicating the number of bytes in the serial_no, or least-significant bytes of the serial number, that are in this message. The maximum number of bytes is 20.
The **serial_no_bytes** is a variable length field representing the serial_no, MS-byte first.
The **symbol_rate_ratio** is an 8-bit unsigned integer indicating the ratio of downstream modulation symbols to upstream modulation symbols. Note that this is always an integer. This ratio is used by the NIU to set the upstream data rate.
The **upstream_frame_delay** is a 32-bit unsigned integer indicating the number of downstream Reed-Solomon symbols to delay the start of the upstream frame from receipt of the downstream frame start cell header or MPEG PID. In order to define a lower limit for the time to process the MAC PDUs, the upstream_frame_delay shall be no less than 37 percent of the frame length. Note that the cells which encapsulate MAC PDUs to be transmitted on downstream frame n, which is designated by frame start frame number n, shall be transmitted to the NIU no later than the first 7 percent of frame n+1. This allows the NIU 30 percent of the frame time to process the maximum MAC PDUs that may be received in one frame.
The **synchronous_time_slot_delay** is an 8-bit unsigned integer indicating which upstream frame in which the NIU should start utilizing a synchronously allocated time slot such as a polling response time slot. (See time slot allocation messages.) The start of the next upstream frame after the time slot message is received is frame number 1.
The **num_pwr_retries** is an 8-bit unsigned integer indicating the number of times that the NIU shall attempt to enter the network at the same power level before increasing the transmit power by 3 dB.

 © ISO/IEC 1999 - All rights reserved

Copyright International Organization for Standardization
Provided by IHS under license with ISO
No reproduction or networking permitted without license from IHS Not for Resale

7.11.3.10 MAC Session Connections

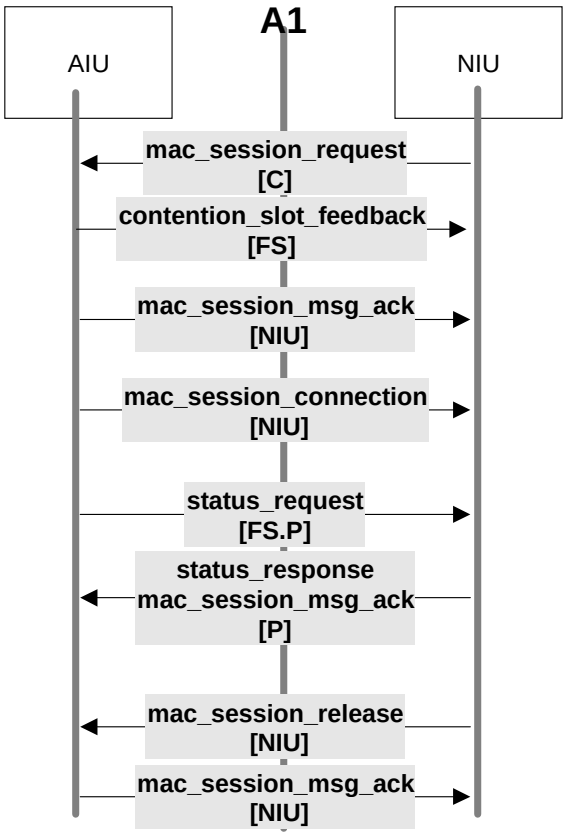

Figure 7.11-24- MAC Session Connections

MAC session connections are ATM connections between the NIU and AIU that transport communication between two control entities. The control entities may or may not reside in the NIU and AIU. It may be necessary that the connection assigned by this mac_session_connection message be switched to other virtual connections one or more times to reach the control entity.

In order to establish a session connection, it is not necessary that the NIU request a connection. The AIU may simply establish the connection by sending a mac_session_connection message to the NIU. In the case of ATM transport, the first MAC session connection is known by default as VPI = 0xFF, VCI = niu_id. This session is the MAC connection for transporting MAC messages in the downstream random access time slots and in the upstream reserved time slots. In the case of MPEG-2-TS transport, the MAC session is known by default as MAC Header 0x1FFF and the broadcast/niu header corresponding to the niu_id.

Due to the shared wireless physical media, assigning a different MAC session connection for each NIU alleviates the need for every NIU to process every MAC session connection cell to identify which cell payloads contain its niu_id.

All session connection messages require an acknowledgment via the mac_session_msg_ack message. A mac_session_msg_ack message sent by an AIU to an NIU, or by an NIU to an AIU, must be completely received by the NIU, or AIU, within 2 seconds from the time that the MAC session message is sent by the NIU, or AIU. Any MAC session message sent by the NIU or AIU that does not receive acknowledgment within the specified time shall immediately be resent. As long as the acknowledgment is not received, the MAC session message shall be resent a minimum of 5 times. If the message becomes invalid during this process, the NIU and AIU shall complete this process with the original message before changing the MAC session message sent.

--`,,```,,,,````-`-`,,`,,`,`,,`---

Copyright International Organization for Standardization
Provided by IHS under license with ISO
No reproduction or networking permitted without license from IHS Not for Resale

mac_session_request

mac_session_request() {	Bits	Bytes	Bit Number / Description
niu_session_id	**32**	**4**	
session_type	**8**	**1**	{enum}
direction_type		**1**	
Reserved	6		7..2
downstream_direction	1		1:{no, yes}
upstream_direction	1		0:{no, yes}
}			

A mac_session_request message is to set-up a connection to an entity that can provide the control flow for that type of session. If a signaling connection for a type of session has been connected, then subsequent signaling messages and connection data do not require a mac_session_request message and handshake.
The **niu_session_id** is a unique number for that session for the one NIU designated by the niu_id in the message header.
The **session_type** is an enumerated type and indicates to the AIU to which entity at the head-end that the session control connection should be made. The session connection can be uni-directional to support uni-directional connections or bi-directional to support bi-directional connections.

```
enum Session_Type {     MAC_CONTROL
                              Reserved 1..255   };
```

To request a bi-directional connection, set both the **downstream** and **upstream** bits. Otherwise, set either the upstream or downstream bit to indicate the direction of the requested uni-directional connection.

mac_session_connection

mac_session_connection() {	Bits	Bytes	Bit Number / Description
niu_session_id	**32**	**4**	
session_type	**8**	**1**	{enum}
Downstream			
VPI	**8**	**1**	VPI/VCI = 0/0 indicates
VCI	**16**	**2**	no assignment is made
Upstream			
VPI	**8**	**1**	VPI/VCI = 0/0 indicates
VCI	**16**	**2**	no assignment is made
}			

The mac_session_connection specifies the VC, i.e. VPI/VCI, or the broadcast/niu header that the NIU must use for the requested session connection. The session connection can be uni-directional to support uni-directional connections. The downstream VPI and downstream VCI are the VPI/VCI for use in the downstream direction. The upstream VPI and upstream VCI are the VPI/VCI for use in the upstream direction. For a bi-directional connection the upstream and downstream VPI/VCI may be the same but are not required to be. In the case of uni-directional connections, the reverse direction is null as indicated by VPI/VCI = 0/0 in that direction. In the case of MPEG-2-TS, the downstream VCI field shall be interpreted as the niu_id. A different control connection for signaling may be assigned for each port of the STU for support of simultaneous signaling control flows from the same STU.
The **session_type** is an enumerated type and indicates to the AIU to which entity the session control connection should be made.

```
enum Session_Type {     MAC_CONTROL
                              Reserved 1..255   };
```

mac_session_release

mac_session_release() {	Bits	Bytes	Bit Number / Description
niu_session_id	**32**	**4**	
}			

The MAC session connection is disconnected after it is no longer needed by the STU or can no longer be supported by the AIU. A mac_session_release originates from either the AIU or the NIU.

 © ISO/IEC 1999 - All rights reserved

Copyright International Organization for Standardization
Provided by IHS under license with ISO
No reproduction or networking permitted without license from IHS
Not for Resale

mac_session_msg_ack

mac_session_msg_ack () {	Bits	Bytes	Bit Number / Description
niu_session_id	**32**	**4**	
}			

To ensure that session is provided within a reasonable or necessary time, as determined by the type of session, the mac_session_msg_ack is sent in response to each of the MAC session messages.

7.11.3.11 Sector Load Balance

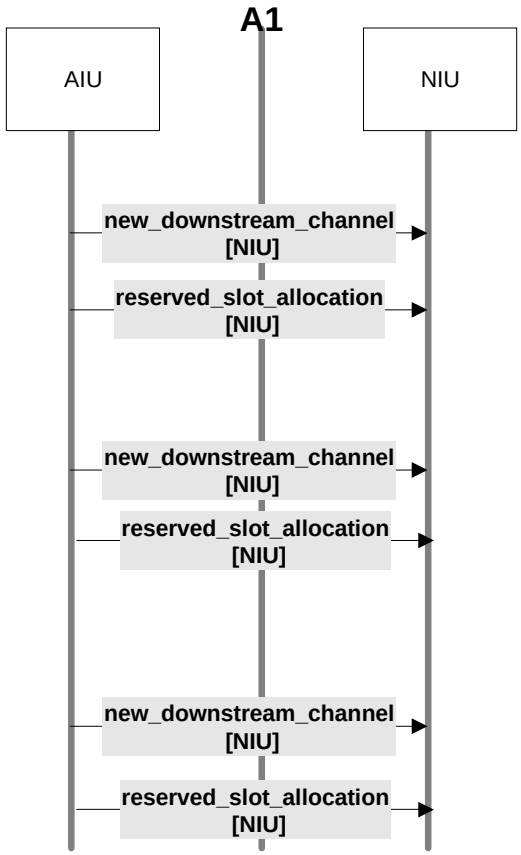

Figure 7.11-25 - Sector Load Balance

new_downstream_channel

new_downstream_channel() {	Bits	Bytes	Bit Number / Description
downstream_frequency	**32**	**4**	in steps of 1 MHz
channel_symbol_rate	**32**	**4**	in steps of 8 kbaud
bits_per_symbol	**8**	**1**	QPSK = 2, 16QAM = 4
roll_off_factor	**8**	**1**	{enum}
convolutional_encode_rate	**8**	**1**	{enum}
}			

This message may be used to tell the NIU to reacquire on a downstream channel other than the one it has currently acquired. The NIU initially acquires the lowest QPSK channel, listens for its poll, goes to the next QPSK channel that it can acquire, and listens there for its poll, etc. until its poll is found. The AIU may then use this message to move the NIU to a downstream channel with different modulation and FEC parameters to take advantage of the enhanced capabilities or advantaged propagation environment of the NIU.
The **downstream_frequency** is a 32-bit unsigned integer indicating the new frequency at the NIU input, in 1 MHz steps at IF frequency.
The **channel_symbol_rate** is a 32-bit unsigned integer indicating the channel symbol rate in 8 kbaud steps.

Copyright International Organization for Standardization
Provided by IHS under license with ISO
No reproduction or networking permitted without license from IHS Not for Resale

The **bits_per_symbol** is an 8-bit unsigned integer used to specify the modulation parameters of the new channel to enable the NIU to use higher order modulation. Valid values are 2 for QPSK and 4 for 16QAM.
The **roll-off_factor** field specifies the roll-off factor (0.2 or 0.35) in an enumerated type.

```
enum roll-off_factor    {     roll_off_0.2
                              roll_off_0.35
                              Reserved 2..255   };
```

The **convolutional_encode_rate** field specifies the amount of convolutional encoding that the new frequency channel will employ in an enumerated type.

```
enum convolutional_encode_rate      {     Rate_1/2
                                          Rate_2/3
                                          Rate_3/4
                                          Rate_5/6
                                          Rate_7/8
                                          Reserved 5..255   };
```

7.11.3.12 Contention Slot Feedback

contention_slot_feedback

contention_slot_feedback() {	Bits	Bytes	Bit Number / Description
upstream_frequency	**16**	**2**	in steps of 100 kHz
retransmission_probability	**8**	**1**	
num_time_slots	**16**	**2**	
for (i=0; i<num_time_slot;i++) {			Fill bytes starting with MSBs
contention_slot_status	**2**		{enum}
}			
}			

The contention_slot_feedback message is used by the AIU to send feedback to the NIU for contention time slot reuse algorithm stabilization. For the time slots in the upstream channels for a given downstream channel, the contention_slot_feedback message shall be sent on every frame start to give status of the last completely received upstream frame. For each upstream frequency, the message contains the probability of retransmission, and it contains specific receipt feedback information for each time slot starting from the lowest numbered time slot, i.e. time slot number 0 or the first time slot, in the upstream frame to the last time slot in the frame that is allocated as a contention time slot.
The **upstream_frequency** is a 16-bit unsigned integer indicating the upstream at the NIU IF output in 100kHz steps.
The **retransmission_probability** is an 8-bit fractional representation of the probability of collision if the NIU transmits on a contention time slot in the next frame on that upstream channel.
The **num_time_slots** is a 16-bit unsigned integer indicating the number of time slots that are in the following list for the upstream frequency.
The **contention_slot_status** list begins with the MS 2-bits of the byte following the num_time_slots field. Four contention_slot_status fields are packed into this and each additional byte. If status for more than four time slots are given for one upstream frequency, then the fifth status is in the MS 2-bits of the next byte, etc. The 2-bits can indicate either idle, receipt, collision, or unused.

Idle indicates that no NIU transmitted on the contention time slot.

Receipt indicates that only one NIU transmitted on the contention time slot, and, thus, the contents have been successfully received at the AIU.

Collision indicates that two or more NIU transmitted on the contention time slot, and, thus, since a collision occurred, none of the transmissions on the time slot have been successfully received at the AIU.

Unused indicates that this time slot is not allocated as a contention time slot.

```
enum contention_slot_status   {     Idle,
                                          Receipt,
                                          Collision,
                                          Unused      };
```

 © ISO/IEC 1999 - All rights reserved

--`,,```,,,,````-`-`,,`,,`,`,,`---
Copyright International Organization for Standardization
Provided by IHS under license with ISO
No reproduction or networking permitted without license from IHS Not for Resale

7.12 Baseband Symmetrical PHY on copper

The physical layer interface when using twisted copper pairs as the physical medium shall comply to the 25.6 Mbit/s symmetric ATM Forum physical layer interface [ATMF 25.6] for twisted copper pairs, with the exception that carrying the 8 kHz network clock in the downstream direction to the user device is mandatory.

7.13 Baseband Symmetrical PHY on fiber

The physical layer interface when using fiber optic cable as physical medium shall comply to the transport of ATM on symmetrical SDH based 155.52 Mbit/s over twin single mode fibers physical layer interface as specified in:
[ITU-T G.652], [ITU-T G.957]
[ITU-T G.707], [ITU-T G.708], [ITU-T G.709]
[ITU-T I.413], [ITU-T I.432]

7.14 Passband Unidirectional PHY for Mobile Reception

This Physical Layer Interface supports unidirectional transmission over radio frequency (up to 1.5 GHz) and is designed to provide mobile reception, even in adverse reception conditions (e.g. urban areas).
This section describes the complete physical layer structure, i.e. framing structure, channel coding and modulation for the carriage of S1 and S2 information. The downstream transmission specification defined below is suitable for either terrestrial or satellite transmission allowing mobile reception, e.g. in cars or trains. Complete physical layer and framing specifications are provided for the downstream information flow.
This Physical Layer Interface is based on Coded Orthogonal Frequency Division Multiplex (COFDM) modulation and a concatenated error protection strategy realized by a convolutional code and a shortened Reed-Solomon (RS) code. The convolutional code rate can be varied allowing optimization of the system performance to specific system requirements.
This Physical Layer Interface supports two separate functions, Grade A and Grade B. The Grade A specifications supports modest channel capacity sufficient for applications such as mobile multimedia. The Grade B specification supports higher channel capacity applications such as mobile digital video.
Grade A uses DQPSK modulation, requires a bandwidth of 1.75 MHz and typically carries a net bit rate of 1.5 Mbit/s for mobile reception environments. Grade B uses QPSK, 16 QAM or 64 QAM modulation, currently requires a bandwidth of 8 MHz and typically carries a net bit rate of 6 Mbit/s for mobile reception.

7.14.1 Encoding/Decoding Process

The processes in the following subclauses shall be applied as shown in the figure below.

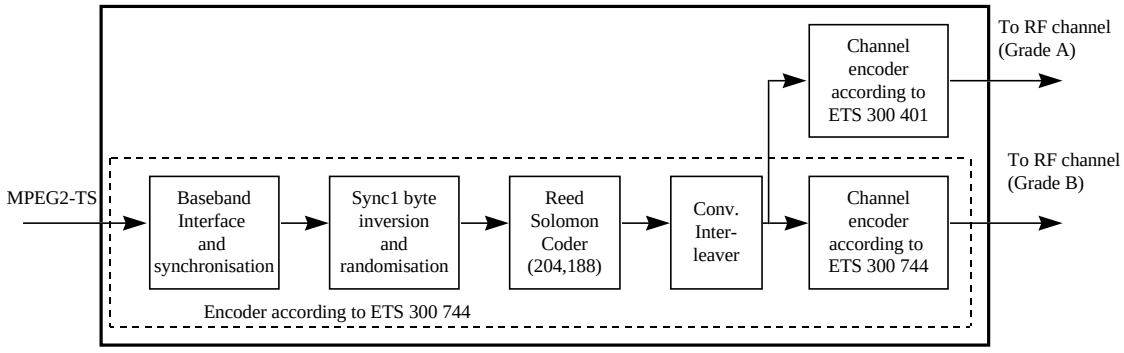

Figure 7.14-1: Conceptual block diagram of mobile wireless broadcast system

7.14.1.1 Baseband interfacing and sync

This unit shall adapt the data structure to the format of the signal source. The framing structure shall be in accordance with MPEG-2 Transport Stream (including sync bytes).Sync 1 inversion and randomization.
This unit shall invert the Sync 1 byte according to the MPEG-2 framing structure, and randomizes the data stream for spectrum shaping purposes. This system framing structure is identical to the one specified in section 7.7.4. The randomization is identical to the one specified in Section 7.7.7.1.

Copyright International Organization for Standardization
Provided by IHS under license with ISO
No reproduction or networking permitted without license from IHS Not for Resale

7.14.1.2 Reed-Solomon (RS) coder

This unit shall apply a shortened Reed-Solomon (RS) code to each randomized transport packet to generate an error-protected packet. This code shall also be applied to the Sync byte itself. The coding is identical to the one specified in Section 7.7.7.2.

7.14.1.3 Convolutional Interleaver

This unit shall perform an interleaving of the error-protected packets with I=12/M=17. This coding is identical to the one specified in Section 7.7.7.3.

7.14.1.4 Channel encoder and modulator

This unit shall perform channel encoding consisting of convolutional coding and COFDM modulation. In Grade A the coding and modulation shall be done in accordance with ETS 300 401. In Grade B the coding and modulation shall be done as defined in ETS 300 744.

8. Network-Interface-Unit to Set-Top-Unit Interface

8.1 Introduction to the A0 Interface

It is expected that settop standards will evolve around several basic types of delivery system architectures. Since no single dominant delivery system architecture is expected to emerge, DAVIC supports portability across dissimilar delivery systems as an optional requirement for the settop. This is the purpose of separating the settop into the Network Interface Unit (NIU) and Settop Unit (STU).
DAVIC defines the NIU as a component which resides between the A1 (or A1*) and A0 interface. The NIU component contains all the access network specific hardware to function with a specific delivery system scheme. The STU, however, is intended to be network-independent. Standardizing the NIU to STU interface (called the A0 interface) will allow implementations to separate the settop box (STB) into an NIU and STU, and achieve STU portability across various access networks. The NIU is co-located (within 25cm or so) with the STU. Access network dependent software configuration of the STU may be required to attain portability across dissimilar A1/A1*s.
DAVIC does not require the A0 interface to be implemented on all STBs; integrated STBs with only an A1/A1* are also defined by DAVIC.

SETTOP BOX WITH NULL UPI

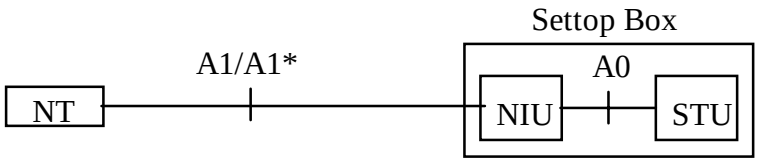

MULTIPLE SETTOPS IN PREMISES NETWORK

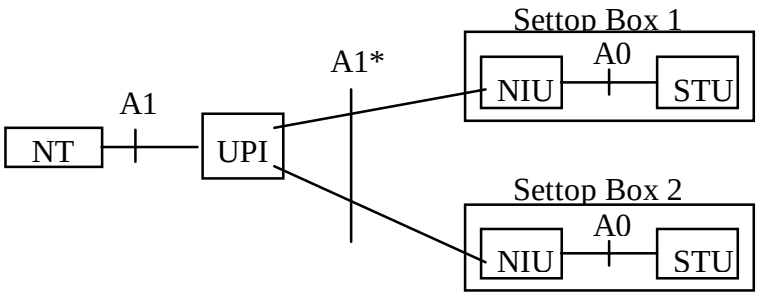

Figure 8.1-1 - Set-top Unit Reference Architecture

 © ISO/IEC 1999 - All rights reserved

Copyright International Organization for Standardization
Provided by IHS under license with ISO
No reproduction or networking permitted without license from IHS
Not for Resale

Figure 8.1-1 illustrates the relationships between STU, NIU, UPI (User Premises Interfaces) and NT. The purpose of the NIU is to ensure network independence and portability of the STU, and leaves delivery system technology dependent functions in the NIU. A1* represents the settop box interface when a premises distribution system is deployed (e.g.: home distribution). In the case where no premises distribution system exists (UPI is null), A1* is functionally equivalent to A1.
An NIU provides an STU with the services needed to reliably send and receive SDUs over the broadband access sub-network. The NIU requires no knowledge of the protocol(s) used by applications running on the STU. Likewise, the STU is isolated from the details of the access sub-network's operation. In addition to its data delivery functionality, the NIU also provides basic set-top services.
The ISO/IEC 16500 A0 specification:

- Defines two interoperable "Levels" of functionality for the A0 interface.
- Defines initialization and local CBD protocols for single NIU per STU arrangements (see Clause 12 of ISO/IEC 16500-5).
- Defines two electrical specifications for the A0 interface. One for NIUs located within the STU enclosure (e.g.: "internal" NIUs), and one for standalone NIUs located outside the STU enclosure (e.g.: "external" NIUs).
- Supports the use of multiple logically and electrically separated NIUs per STU by
    1. use of multiple A0 interfaces
    2. by integrating multiple NIUs into the Settop Box
    3. by any combination of (1) and (2) above

  In STBs that have multiple NIUs, the selection and control of one or more of the NIUs is left up to the STU implementation and or application.
- DAVIC specifications do not consider multiple STUs per NIU. However, DAVIC specifications do address how point-to-multipoint delivery systems can uniquely identify multiple Settop Boxes (STBs) within a single user premises system. Specifications for these point-to-multipoint functionalities may be found in interface specifications in this part of ISO/IEC 16500.

8.2 Functional Description of the A0 Interface

The A0 interface is divided into 3 logical data buses. These are:

- the High-Speed Downstream data bus (carrying data packets as specified in [ISO/IEC 13818-1])
- the Bi-Directional Cell bus
- the Local Control data bus

In addition, the A0 interface has:

- a bi-directional Reset connection
- an non-mandatory Analog Pass-Through bus
- Power Supply connections for the NIU

The analog portion of the A0 interface is OPTIONAL. It is not a requirement for DAVIC compliance. The purpose of specifying optional analog pass through of tuned analog signals is to allow settop manufacturers to develop all-digital A0 compliant interfaces, as well as mixed digital/analog A0 compliant interfaces.
These logical buses provide a single universal interface for the two general delivery system A1/A1*s being addressed in ISO/IEC 16500:

1. End-to-end ATM delivery systems, such as FTTC, VDSL, some ADSL, some HFC, and Active-NT A1/A1*s
2. Non end-to-end ATM delivery systems, such as Satellite, some ADSL, and some HFC A1/A1*s(and non-end-to-end ATM delivery systems

8.3 Capability Levels Required for A0

The A0 Interface specification supports two separate capability Levels -- Level "A" and Level "B". The primary functional characteristics are summarized in Table 8-1

Copyright International Organization for Standardization
Provided by IHS under license with ISO
No reproduction or networking permitted without license from IHS Not for Resale

Table 8-1 - Capability Levels

Specification	Level "A"	Level "B"
High-Speed Downstream Data Bus	≤ 51.84 Mbit/s	≤ 51.84 Mbit/s
Bi-Directional Cell Bus Capacity	≤ 3.088 Mbit/s	≤ 51.84 Mbit/s
Bi-Directional Cell Bus rise/fall time specifications	3ns min 10ns max	2ns min 4ns max
Data Flows allowed on the Bi-Directional Cell Bus	S2, S3, S5	S1, S2, S3, S4, S5
Maximum PDU Size Supported on the Bi-Directional Cell Bus.	1.5 kbyte	64 kbyte (see [ITU-T I.363]) Min. Re-assembly Buffer size of 128 kbytes
Minimum number of VPI/VCI pairs supported on the Bi-Directional Cell Bus.	4	16
Capability to support S4 flow on the STU	Not Mandatory	Mandatory
S1 flow (MPEG-2-TS) characteristics	Carried over the Downstream Bus only with t_jitter=50μs (see [ISO/IEC 13818-9])	Carried over the Downstream Bus with t_jitter=50μs or carried over the Bi-Directional Cell Bus with t_jitter=3.0ms
Local Control Bus	Up to 100 kbit/s required The STU must dedicate a Local Control Bus for each logical A0 interface, and can only exchange local control message with the NIU's processor. The NIU may share its Local Control Bus with other devices within the NIU.	
Reset Bus	Active low. Pulse duration = 1.0 ms minimum. Both the NIU and STU must have the capability to be reset by the other; however, the originating device of the reset is not required to reset itself.	

8.3.1 Notes on Requirements for Level "A" A0 Interface

Maximum PDU Size: The maximum Packet Data Unit length required for any single VCI to be supported by Level "A" STUs and NIUs across the A0 Bi-directional Cell Bus. This part of ISO/IEC 16500 also defines the maximum Packet Data Unit length that any DAVIC application can expect to transmit or receive across the Level "A" A0 Bi-directional Cell bus. NIUs and STUs must support the maximum PDU size for the minimum number of VPI/VCI pairs required for compliance to Level "A" A0 specifications (e.g.: 4 VPI/VCI pairs at 1.5 kbytes each simultaneously).
Minimum Number of VPI/VCI pairs: The minimum number of VPI/VCI pairs that shall be supported by Level "A" STUs and NIUs across the A0 Bi-directional Cell Bus. This part of ISO/IEC 16500 also defines the maximum number of VPI/VCI connections that any DAVIC application can depend on to transmit or receive data across the Level "A" A0 Bi-directional Cell bus.
Bi-Directional Cell Bus Capacity: The 3.088 Mbit/s capacity requirement is a throughput specification (e.g., the Level "A" Bi-directional bus shall support 7,283 ATM cells per second in each direction).

8.3.2 Notes on Requirements for Level "B" A0 Interface

Maximum PDU Size: The maximum Packet Data Unit length for any single VCI to be supported by Level "B" STUs and NIUs across the A0 Bi-directional Cell Bus is defined in [ITU-T I.363]. The minimum re-assembly buffer-size for Level "B" STUs shall be 128 kbytes (aggregate total of simultaneous PDUs).
S1 Flow: The S1 flow over the Level "B" A0 interface may be supported over either the High-Speed Downstream Bus or the Bi-Directional Cell Bus, but not both simultaneously (e.g.: 2 MPEG-2-TS S1 flows occurring at the same time).
Cell Delay Variation for S1 flow (MPEG-2-TS) over Bi-directional Cell Bus: The timing of the real-time delivery of the bytes of Transport Stream packets at the A0 interface over the Bi-directional Cell Bus shall not exceed 3.0 millisecond (3.0 ms). ISO/IEC 16500 requires that packet delay variation be compliant with [ISO/IEC 13818-9]

 © ISO/IEC 1999 - All rights reserved

Copyright International Organization for Standardization
Provided by IHS under license with ISO
No reproduction or networking permitted without license from IHS Not for Resale

(*Extension for real-time interface for systems decoders*) with the modification that subclause 2.5 is replaced with: "The value of the constant t_jitter is 3.0 ms."
Minimum Number of VPI/VCI pairs: The minimum number of VPI/VCI pairs that shall be supported by Level "B" STUs and NIUs across the A0 Bi-directional Cell Bus. This part of ISO/IEC 16500 also defines the maximum number of VPI/VCI connections that any DAVIC application can depend on to transmit or receive data across the Level "B" A0 Bi-directional Cell bus.
S4 Support in the Level "B" STU: The Level "B" STU shall support, in addition to proxy signaling provided in Level "A", the *capability or potential capability*, to use connection control signaling the STU (e.g.: S4 as defined in Part 7, which includes Q.2931, Q.2130, and Q.2110). The S4 capability may be resident on the STU, or provided through hardware/software upgrade installations, or through software updates via downloading to hardware available in the STU. Following any upgrades installations or downloading of S4 capabilities, the Level B STU shall be able to successfully execute all required DAVIC functions listed in ISO/IEC 16500-6 while using the S4 capabilities.
Compatibility with Level "A" NIUs: An additional requirement for Level "B" STU is that it must be compatible for NIUs conforming to the Level "A" specification (e.g.: Level "B" is a super-set of Level "A"). A Level "B" STU must be capable of operation with a Level "A" NIU.

8.4 Definition of Internal and External A0 Interface

DAVIC recognizes two independent tools for the physical connectors of the A0 interface. These include:

1. The situation where an NIU is physically plugged into a slot or opening in the STU. This is called an *"Internal A0"* (Figure 8.4-1).
   The internal A0 interface shall use a 96-pin connector as the interface for all required data busses. The following specifications shall be used for the electrical, mechanical, and physical characteristics of the internal A0 connector. Hot insert of the NIU is not supported by the DAVIC Internal A0 specifications.

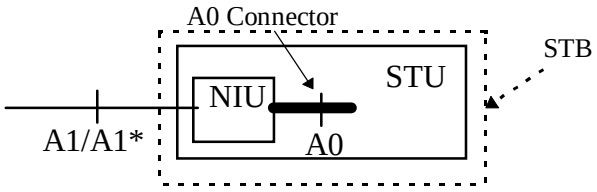

Figure 8.4-1 - Internal A0

2. The situation where an NIU is simply co-located with an STU via a short cable to an external interface on the STU. This is called an *"External A0"* (Figure 8.4-2).

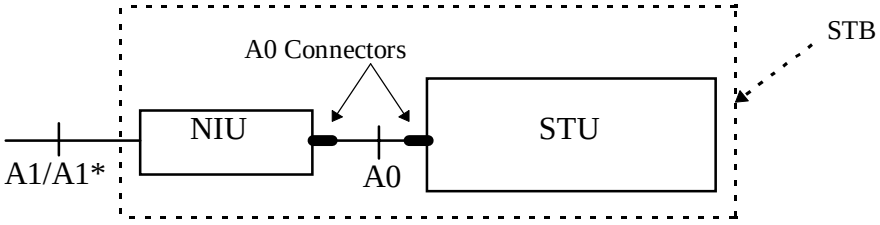

Figure 8.4-2 - External A0

Inter-changeability between Internal NIUs and External A0 NIUs is not required. This is because both the internal NIU and the external NIU must be designed for specific, separate environments. The External NIU must be packaged as a stand-alone device, while the internal NIU is packaged for minimization of size, specific external dimensions, mechanical requirements for the STU slot, and thermal dispersion. Therefore, internal and external NIUs are in fact separate DAVIC tools for implementing the A0 interface.

8.5 Specification of the Internal A0 (Digital Part)

The Digital Part of the Internal A0 consists of the High-Speed Downstream Data Bus, Bi-Directional Data Bus, Local Control Bus, and Reset Bus.

© ISO/IEC 1999 - All rights reserved

Copyright International Organization for Standardization
Provided by IHS under license with ISO
No reproduction or networking permitted without license from IHS
Not for Resale

8.5.1 Electrical Specification

The internal A0 interface shall use a 96-pin connector as the interface for these data busses. The pin assignment and signal legend are given in Table 8-2 and Table 8-3.

Table 8-2 - 96 Pin Connector Signal Assignment

Row A Pins	Signal	Source	Row B Pins	Signal	Source	Row C Pins	Signal	Source
1	GND	STU	33	SCCLK	STU	65	GND	STU
2	MDO0	NIU	34	GND	STU	66	TXDATA0	STU
3	MDO1	NIU	35	SCIO	BI-DIR	67	TXDATA1	STU
4	MDO2	NIU	36	GND	STU	68	TXDATA2	STU
5	MDO3	NIU	37	SCRESET*	STU	69	TXDATA3	STU
6	MDO4	NIU	38	GND	STU	70	TXDATA4	STU
7	MDO5	NIU	39	SCVCCEN*	STU	71	TXDATA5	STU
8	MDO6	NIU	40	GND	STU	72	TXDATA6	STU
9	MDO7	NIU	41	SCDETECT	NIU	73	TXDATA7	STU
10	GND	STU	42	RESETNIU*	STU	74	RESERVED[1]	
11	MOVAL	NIU	43	GND	STU	75	TXSOC	STU
12	MOSTRT	NIU	44	GND	STU	76	TXCLAV	NIU
13	GND	STU	45	DIGADAT[4]	NIU	77	TXENB*	STU
14	MCLKO	NIU	46	GND	STU	78	TXCLK	STU
15	GND	STU	47	DIGALRCK[4]	NIU	79	GND	STU
16	SDA	BI-DIR	48	GND	STU	80	8KHZRXREF	NIU
17	GND	STU	49	27MHZCLK[4]	NIU	81	RESERVED[1]	
18	SCL	BI-DIR	50	GND	STU	82	RXDATA0	NIU
19	GND	STU	51	DIGACLK[4]	STU	83	RXDATA1	NIU
20	DIGVIDEO0[3]	NIU	52	GND	STU	84	RXDATA2	NIU
21	DIGVIDEO1[3]	NIU	53	DIGABCLK[4]	NIU	85	RXDATA3	NIU
22	DIGVIDEO2[3]	NIU	54	GND	STU	86	RXDATA4	NIU
23	DIGVIDEO3[3]	NIU	55	DIGVIDEO6[4]	NIU	87	RXDATA5	NIU
24	DIGVIDEO4[3]	NIU	56	GND	STU	88	RXDATA6	NIU
25	DIGVIDEO5[3]	NIU	57	DIGVIDEO7[4]	NIU	89	RXDATA7	NIU
26	GND	STU	58	RESETSTB*	NIU	90	RESERVED[1]	
27	+3.3V	STU	59	GND	STU	91	RXSOC	NIU
28	+5.0V	STU	60	GND	STU	92	RXCLAV	NIU
29	+5.0V	STU	61	GND	STU	93	RXENB*	STU
30	+12.0V	STU	62	ANLGND[2]	STU	94	RXCLK	STU
31	+21.0V	STU	63	ANLGND[2]	STU	95	GND	STU
32	+35.0V	STU	64	ANLGND[2]	STU	96	-12.0V	STU

Note 1: The pins marked as RESERVED on both sides of the interface shall be connected to ground through a 10 Kohm (±10%) resistor on the NIU. On the STU, these pins are unconnected.

Note 2: The Analog Ground (ANLGND) is to be connected on the STU side directly from the connector to the Ground at the Power Supply using a separate ground wire. Analog grounds will be used for return of +12, +21, +35, and -12 volt power supply connections.

Note 3: These pins are defined for the Optional Analog Pass-Through (see Section 8.6). If the Analog Pass-Through function is not implemented, these pins are RESERVED and shall be implemented as specified in Note 1.

Note 4: These pins are defined for the Optional Analog Pass-Through (see Section 8.6). If the Analog Pass-Through function is not implemented, these pins are GND on the NIU, and unconnected on the STU.

 © ISO/IEC 1999 - All rights reserved

Copyright International Organization for Standardization
Provided by IHS under license with ISO
No reproduction or networking permitted without license from IHS
Not for Resale

Table 8-3 - Signal Legend

Signal	Definition	A0 Signal Reference
GND	Ground	Power
ANLGND	Analog Ground	Power
+3.3V, +5.0V, +12.0V, +21.0V, +35.0V, -12.0V	Power Supplies	Power
MDO[0-7]	8-bit data bus which carries MPEG-2-TS Data from the NIU	HS Downstream
MOVAL	MOVAL indicates valid data bytes on MDO[0-7].	HS Downstream
MOSTRT	MOSTRT is valid during the first byte of an output transport packet	HS Downstream
MOCLKO	MCLKO runs at the rate at which bytes are offered by the module on MDO0-7	HS Downstream
SDA	I^2C Data	I^2C
SCL	I^2C Clock	I^2C
TXDATA[0-7]	Transmit Byte-wide true data driven from ATM to PHY layer. TxData[7] is the MSB.	Bi-Directional
TXSOC	Start Of Cell. Active high signal asserted by the ATM layer when TxData contains the first valid byte of the cell.	Bi-Directional
TXCLAV	Cell Available. For cell-level flow control, TxClav is an active high signal from PHY to ATM layer, asserted by the PHY layer to indicate it can accept the transfer of a complete cell.	Bi-Directional
TXENB*	Enable. Active low signal asserted by the ATM layer during cycles when TxData contains valid cell data.	Bi-Directional
TXCLK	Data transfer/synchronization clock provided by the ATM layer to the PHY layer for synchronizing transfers on TxData.	Bi-Directional
8KHZRXREF	Receive Reference. Output from the PHY layer for synchronization purposes (e.g. 8 kHz marker, frame indicator, etc.).	Bi-Directional
RXDATA[0-7]	Receive Byte-wide data driven from PHY to ATM layer. RxData[7] is the MSB.	Bi-Directional
RXSOC	Start Of Cell. Active high signal asserted by the PHY layer when RxData contains the first valid byte of a cell.	Bi-Directional
RXCLAV	Cell Available. For cell-level flow control, RxClav is an active high signal asserted by the PHY layer to indicate it is has a complete cell available for transfer to the ATM layer. This signal indicates cycles when there is valid information on RxData/RxSOC.	Bi-Directional
RXENB*	Enable. Active low signal asserted by the ATM layer to indicate that RxData and RxSOC will be sampled at the end of the next cycle.	Bi-Directional
RXCLK	Clock. Transfer/synchronization clock from the ATM layer to the PHY layer for synchronizing transfers on RxData.	Bi-Directional
RESETNIU*	Reset NIU. Signal from the STU to cause a hardware reset of the NIU.	RESET
RESETSTB*	Reset STU. Signal from the NIU to cause a hardware reset of the STU.	RESET
DIGADAT	Digitized analog audio, I^2S formatted stereo PCM data pin	Analog[1]
DIGALRCK	Digitized analog audio, I^2S formatted Left/Right clock	Analog[1]
DIGACLK	Digitized analog audio, I^2S formatted oversampled audio DAC clock (frequency is 256 times DIGALRCK)	Analog[1]
DIGABCLK	Digitized analog audio, I^2S formatted bit clock (frequency is 64 times DIGALRCK)	Analog[1]
SCCLK	Serial IO Clock	Smart Card
SCIO	Serial IO	Smart Card
SCRESET	Resets the smart card device (active low)	Smart Card
SCVCCEN	"Turns on" the smart card device (active low)	Smart Card
SCDETECT	Indicates the presence of a smart card in the reader (active high)	Smart Card
27MHZCLK	27MHz clock recovered from analog video	Analog[1]
DIGVIDEO[0-7]	CCIR 656 formatted digitized analog video data. DIGVIDEO0 is LSB.	Analog[1]

Note 1: The Analog Pass-Through functionality is optional in the A0 specification.

8.5.1.1 MPEG Downstream Data Bus Electrical Specifications

The MPEG Downstream Data Bus is similar to the DVB Common Interface which has also been specified for the CA0 Interface in ISO/IEC 16500-7.
Timing characteristics and diagrams are shown in Table 8-4 and Figure 8.5-1.

--`,,```,,,,````-`-`,,`,,`,`,,`---

Copyright International Organization for Standardization
Provided by IHS under license with ISO
No reproduction or networking permitted without license from IHS Not for Resale

Table 8-4 - MPEG Bus Clock Timing Characteristics

Item	Symbol	Min	Max
Clock period	tclkp	111 ns	n/a
Clock High time	tclkh	40 ns	n/a
Clock Low time	tclkl	40 ns	n/a
Data Out Delay	tod	15 ns	tclkp - 20 ns
Clock Rise time	trs	3 ns	10 ns
Clock Fall time	tfll	3 ns	10 ns

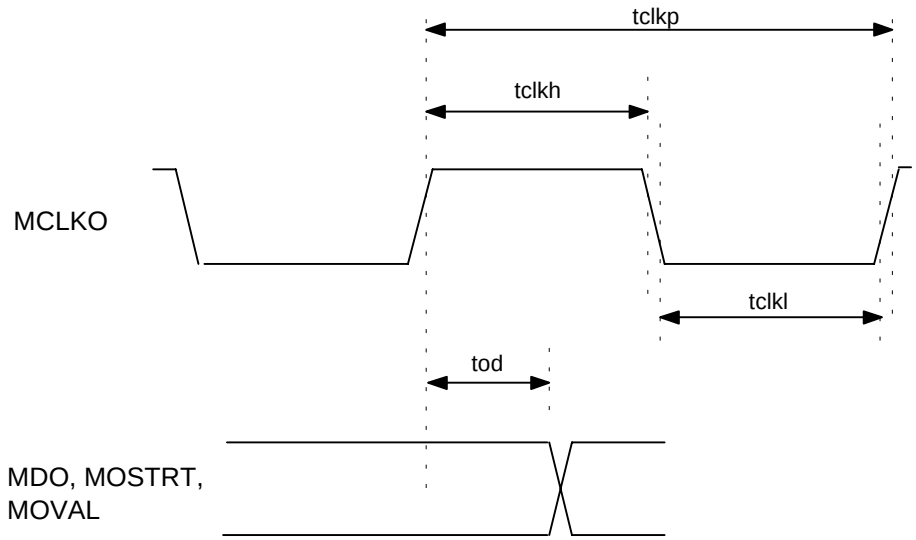

Figure 8.5-1 - MPEG Bus Timing Diagram

8.5.1.2 Bi-Directional Data Bus Electrical Specifications

The implementation of the Bi-Directional Data Bus has been based on the [ATMF UTOPIA] specification. However, it should be noted that some the DAVIC internal A0 specifications do not fully comply with the entire (e.g., Level 1) ATM Forum UTOPIA specifications. This part of ISO/IEC 16500 varies from the UTOPIA specification in regard to:

- Maximum clock rate of 10 MHz
- Input capacitance of 35 pF (this value differs from the one specified in UTOPIA document due to the inclusion of the capacitance of the connector)
- Minimum rise time of 2ns, which is measured loaded at 35 pF

Further, DAVIC has defined two electrical levels for the Bi-Directional Cell Bus. These levels correspond to the Level “A” and Level “B” functional levels defined in Table 8-1. As such, a Level “B” A0 STU shall support both Level “A” and Level “B” Bi-Directional Cell Bus electrical specifications in order to comply with the DAVIC Level “B” A0 specification.

8.5.1.2.1 AC Characteristics

The time characteristics of the Bi-Directional interface are specified in Table 8-5 and Table 8-6. They shall be considered as an addendum to the table already included in [ATMF UTOPIA].

 © ISO/IEC 1999 - All rights reserved

--`,,```,,,,````-`-`,,`,,`,`,,`---

Copyright International Organization for Standardization
Provided by IHS under license with ISO
No reproduction or networking permitted without license from IHS Not for Resale

Table 8-5 - Transmit Direction AC Characteristics.

Signal Name	Direction	Item	Description	Level "A"		Level "B"	
				Min	Max	Min.	Max.
TxClk	A → P	tT1	TxClk frequency	0	10MHz	0	10MHz
		tT2	TxClk duty cycle	40%	60%	40%	60%
		tT3	TxClk peak-to-peak jitter	-	5%	-	5%
			TxClk rise/fall time	3ns	10ns	2ns	4ns
TxData[0..7] TxPrty TxSOC	A → P	tT4	Input set-up to xClk	10ns	-	10ns	-
		tT5	Input hold from TxClk	1ns	-	1ns	-
TxEnb*	A ← P	tT6	Input set up to TxClk	10ns	-	10ns	-
		tT7	Input hold from TxClk	1ns	-	1ns	-
TxFull*/TxClav		tT10	Input set up to TxClk	10ns	-	10ns	-
		tT9	Input hold from TxClk	1ns	-	1ns	-

Table 8-6 - Receive Direction AC Characteristics.

Signal Name	Direction	Item	Description	Level "A"		Level "B'	
				Min.	Max.	Min.	Max
RxClk (See Note 6)	A → P	tT1	RxClk frequency	0	10MHz	0	10MHz
		tT2	RxClk duty cycle	40%	60%	40%	60%
		tT3	RxClk peak-to-peak jitter	-	5%	-	5%
			RxClk rise/fall time	3ns	10ns	2ns	4ns
RxData[0..7] RxPrty RxSOC	A ← P	tT4	Input set-up to RxClk	10ns	-	10ns	-
		tT5	Input hold from RxClk	1ns	-	1ns	-
RxEnb*	A → P	tT6	Input set up to RxClk	10ns	-	10ns	-
		tT7	Input hold from RxClk	1ns	-	1ns	-
RxFull*/RxClav	A ← P	tT10	Input set up to RxClk	10ns	-	10ns	-
		tT9	Input hold from RxClk	1ns	-	1ns	-

8.5.1.2.2 Common Conditions for AC characteristics

Table 8-7 - Common AC Characteristics

Parameter	Level "A"			Level "B"		
	Typ.	Min.	Max.	Typ.	Min.	Max.
Input capacitance of input or input/output signal (pin)	-	-	35pF	-	-	35pF
Input and output timing reference	1.4V	-	-	1.4V	-	-
Absolute input/output voltage ratings with respect to Ground (see notes 1,2 and 3)		-0.5V	+7.0V		-0.5V	+7.0V

8.5.1.3 Notes on AC Characteristics

Note 1: Voltages specified as irrespective of power supply voltage applied.

Note 2: Functional operation at voltages outside the range specified is not implied.

Note 3: Voltages greater than those listed may cause permanent damage.

Note 4: In the Direction Column in Table 8-5 and Table 8-6, "A" is equivalent to STU (ATM Layer side) and "P" is equivalent to NIU (Physical Layer side).

Note 5: The RxClk and TxClk peak-to-peak jitter (for one cycle) shall be measured from one rising edge to the next rising edge.

Note 6: RxClk and TxClk rise time shall be measured at transmit side loaded with 35pF and between 10% and 90% levels of VOH.

Copyright International Organization for Standardization
Provided by IHS under license with ISO
No reproduction or networking permitted without license from IHS Not for Resale

Note 7: DAVIC recommends that, for Level "B" A0 interfaces, trace impedances be designed for typically 60 ohm, with a manufacturing tolerance of ±15 Ohm.

8.5.1.3.1 DC Characteristics

The DC characteristics in Table 8-8 are identical for both Level "A" and Level "B" A0 interfaces.

Table 8-8 - DC Characteristics

Symbol	Parameter	Min.	Max.	Conditions
VIL	Input LOW voltage	-0.3V	+0.8V	-
VIH	Input HIGH voltage	+2.0V	+5.3V (See Note 1)	-
VOH	Output or bi-directional HIGH voltage	+2.4V	-	IOH ≥ | -4mA |
VOL	Output or bi-directional LOW voltage	-	+0.5V	IOL ≥ +4mA
IOH	Output current at HIGH voltage	-	-4mA	VOH ≥ +2.4V
IOL	Output current at LOW voltage	-	+4mA	VOL≤ +0.5V
IIH	Input current at HIGH voltage	-	±300μA	Input can sink and source
IIL	Input current at LOW voltage	-	±300μA	Input can sink and source

Note 1: This specifications is not a recommendation to use 5.3V as the output level, but should be considered a cautionary note that 3.3V designed technology should be sufficiently robust to tolerate 5.3V.

8.5.1.3.2 UTOPIA Level 1 Options

The UTOPIA Level 1 implementation for the A0 interface shall implement the Cell-Level Handshake. The A0 interface shall deassert TxClav and RxClav exactly 4 cycles before the end of cell if it cannot accept the immediate transfer of the subsequent cell.

8.5.1.4 I^2C Data Bus Electrical Specification

For the internal A0 interface, the Local Control Bus shall:

1. Use the I^2C protocol as specified in the [I^2C Interface].
2. Identify the STU processor with the 7 bit I^2C address of "0101011"
3. Identify the NIU processor with the 7 bit I^2C address of "0101100"
4. Allocate the capacitance and resistance between the NIU and STU as shown in Table 8-9.

Table 8-9 - I^2C Specifications

NIU	STU
Capacitance shall be less than or equal to 150pF	Capacitance shall be less than or equal to 50pF
Resistance R_p as defined in [I^2C Interface], section 10.1. This value shall be 4.7 kΩ +/- 10%.	Resistance R_p defined in [I^2C Interface], section 10.1. This value shall be 10 kΩ +/- 10%.

Note: R_p is a pull-up resistor to +5V.

8.5.1.5 Local Reset Bus Electrical Specifications

For the Internal A0 interface, the Local Reset Bus shall comply to the following requirements:

1. The Reset signals (RESETNIU* and RESETSTB*) shall be implemented on two separate PINs.
2. A minimum pulse duration of 1.0 ms shall be performed for the RESET signals.
3. The RESET signals shall be active at low level.
4. The voltage levels for the RESET signals shall comply to Table 8-10.
5. The Load Characteristics of the RESET signals shall be the same as those specified for the UTOPIA signals in Table 8-7.

 © ISO/IEC 1999 - All rights reserved

--`,,```,,,,````-`-`,,`,,`,`,,`---

Copyright International Organization for Standardization
Provided by IHS under license with ISO
No reproduction or networking permitted without license from IHS Not for Resale

Table 8-10 - Reset Signals Specifications

Parameter	Min.	Max.	Conditions
Input LOW voltage	-	+0.8V	-
Input HIGH voltage	+2.0V	-	-
Output HIGH voltage	+2.4V	-	IOH, max = -4mA @+2.4V
Output LOW voltage	-	+0.5V	IOL, max = +4mA @+0.5V

8.5.1.6 Power Supply Electrical Specifications

The voltages and the correspondent current that shall be provided by the power supply are specified in Table 8-11. The total power consumption drawn from the STU to the NIU shall be lower than 20 watts.

Table 8-11 - Power Supplies

Supply Voltage	Supply Current	Allowed Voltage Variation
3.3	1.0 amps	±5%
5.0	2.0 amps	±5%
12.0	0.75 amps	±10%
- 12.0	0.10 amps	±10%
21.0	0.30 amps	±10%
35.0	0.01 amps	±10%

8.5.2 Physical and Mechanical Connector Specifications

The A0 Internal connector (Figure 8.5-2) shall meet the requirements set forth in [DIN 41612]. The connector used shall contain 96 pins arranged in a 3 rows by 32 pins format, and shall use board locks. The Socket (Female) type of connector shall be used on the STU side of the interface and the NIU side of the interface shall use the Pin (Male) type of connector.

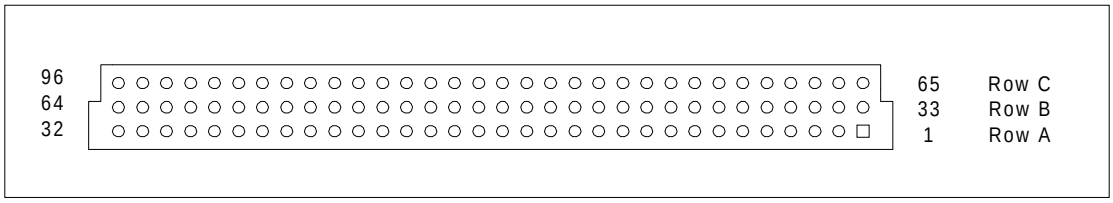

Figure 8.5-2 - Internal A0 Connector

8.6 Optional Internal A0 Specification (Analog Pass-Through Part)

The Internal A0 Analog Pass-Through Bus shall require an analog-to-digital conversion of analog video and audio in the Internal A0 NIU. The digitized baseband PCM data are transmitted to the STU over pins (8 for video data, 1 for video clock, 1 for audio data, 3 for audio clocks) on the Internal A0 connector. See Table 8-2 for information regarding pin layout and specifications.

8.6.1 Electrical Specifications

Table 8-12 and Table 8-13 provide the electrical specifications required for the Optional Analog Pass-Through functionality. The input capacitance of input or input/output signal (pin) for Optional Analog Pass-Through functionality shall be 35pF.

Copyright International Organization for Standardization
Provided by IHS under license with ISO
No reproduction or networking permitted without license from IHS Not for Resale

Table 8-12 - Rise & Fall Times

Signal	Min.	Max.
DIGALRCK DIGACLK DIGABCLK	-	5ns
27MHZCLK DIGVIDEOn	-	5ns
DIGADAT	-	10ns

Table 8-13 - Propagation Delay

Signal	Min	Max
27MHZCLK rising edge to video data		25ns
DIGADAT propagation delay		30ns

8.6.2 Baseband Analog Video - Digitized Format

The digitized video interfaces shall consist of 8 pins for formatted PCM data, and 1 pin for a 27 MHz clock which shall be recovered from the incoming analog on A1/A1*.The video data shall be formatted according to [ITU-R CCIR 656] with the following additions:

1. 27MHZCLK has a duty cycle of MIN = 40%, MAX = 60%
2. AC Characteristics as defined in Table 8-14.

Table 8-14 - Propagation Delay

Signal	Min.	Max.
27MHZCLK rising edge to video data	10ns	25ns
27MHZCLK Jitter from the average period over one field		3ns

3. The accuracy of 27MHZCLK shall be bounded within ±50 ppm.
4. DC Characteristics are defined as in Table 8-8.
5. Additional Parts II and III to [ITU-R CCIR 656] are not used.

8.6.3 Baseband Analog Audio - Digitized Format

The digitized audio interface shall consist of 1 pin for formatted PCM data, 1 pin for a Left/Right clock (called DIGALRCK), 1 pin for an oversampled audio DAC clock (called DIGACLK, with a frequency equal to 256 times DIGALRCK), and 1 pin for a bit clock (called DIGABCLK, with a frequency equal to 64 times the DIGALRCK). The PCM data shall be formatted according to I^2S format, and specified as in Figure 8.6-1.

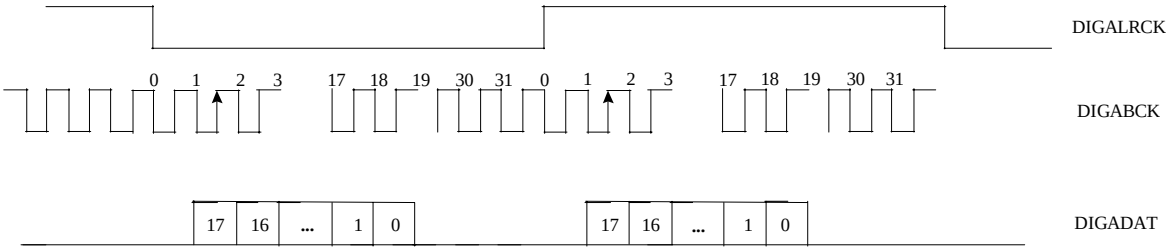

Figure 8.6-1 - Digitized Audio Interface Waveforms

Additional Digital Audio specifications:

1. The audio digitized signal has no emphasis
2. Audio digitization may take place at the following frequencies: 32kHz, 44.1kHz, 48kHz
3. Audio interface AC characteristics are as in Table 8-15.

 © ISO/IEC 1999 - All rights reserved

--`,,```,,,,````-`-`,,`,,`,`,,`---

Copyright International Organization for Standardization
Provided by IHS under license with ISO
No reproduction or networking permitted without license from IHS Not for Resale

Table 8-15 - Audio Interface AC Characteristics

Signal	Min.	Max.
DIGALRCK from falling edge of DIGABCK	-10ns	+10ns
DIGADAT from falling edge of DIGABCK	+2ns	+35ns
DIGABCK transition from rising edge of DIGACLK	+12ns	+46ns

8.7 Optional Internal A0 Specification (Smart Card Bus)

The A0 supports the option of locating a DAVIC CA1 smart card reader on the NIU. If the NIU implements the CA1 interface and the STU wishes to utilize said interface then the connections shall conform to [ISO/IEC 7816-3]. When the NIU implements the smart card bus, the SCIO signal shall be pulled up on the NIU via a 4.7kΩ resistor connected to +5vdc in addition to being connected to the CA1 smart card reader.

8.7.1 Electrical Connections When Not Implementing The Smart Card Bus

If either the STU or the NIU does not support the smart card bus then the smart card bus must be properly terminated as specified below.

8.7.1.1 Connections If STU Does Not Support The A0 Smart Card Bus

If the A0 smart card bus is not enabled the smart card bus shall be connected as follows:

Pin	Name	Connection
33	SCCLK	10 kΩ to Ground
35	SCIO	10 kΩ to Ground
37	SCRESET	10 kΩ to Ground
39	SCVCCEN	10 kΩ to +5vdc
41	SCDETECT	10 kΩ to Ground

Note: All resistances subject to a tolerance of +/- 10% of the stated value

8.7.1.2 NIU Does Not Support The A0 Smart Card Bus

If the A0 smart card bus is not enabled the smart card bus shall be connected as follows:

Pin	Name	Connection
33	SCCLK	Not Connected
35	SCIO	4.7 kΩ to +5vdc
37	SCRESET	Not Connected
39	SCVCCEN	Not Connected
41	SCDETECT	Connected to Ground

Note: All resistances subject to a tolerance of +/- 10% of the stated value

8.7.1.3 Smart Card Bus Electrical Specifications

8.7.1.3.1 AC Characteristics

The time characteristics of the Smart Card interface are specified in Table 8-16 and Table 8-17. Note that the Smart Card clock, ScClk, is divided by two before being passed on to the external card. While the smart card reset signal, ScReset*, is documented as an active low signal the polarity of the reset signal is defined by the type of smart card according to the protocol layer of the ISO/IEC 7816-3 standard. The logic value presented on the ScReset* signal shall be same value presented to the Smart Card by the NIU.

Copyright International Organization for Standardization
Provided by IHS under license with ISO
No reproduction or networking permitted without license from IHS Not for Resale

Table 8-16 - Smart Card AC Characteristics.

Signal Name	Description	Specification	
		Min	Max
ScClk	ScClk frequency	0	40MHz
	ScClk duty cycle	40%	60%
	ScClk peak-to-peak jitter		5%
	ScClk rise/fall time	3ns	8ns
ScIO	ScIO rise time	3ns	200ns
	ScIO fall time	3ns	10ns
ScReset*	ScReset* rise/fall time	3ns	10ns
ScVccEn*	ScVccEn* rise/fall time	3ns	10ns
ScDetect	ScClk rise time	3ns	200ns
	ScClk fall time	3ns	10ns

8.7.1.3.2 Common Conditions for AC characteristics

Table 8-17 - Common AC Characteristics

Parameter	Specification		
	Typ.	Min.	Max.
Input capacitance of input or input/output signal (pin)	-	-	35pF
Input and output timing reference	1.4V	-	-
Absolute input/output voltage ratings with respect to Ground (see notes 1,2 and 3)		-0.5V	+7.0V

8.7.1.4 Notes on AC Characteristics

Note 1: Voltages specified as irrespective of power supply voltage applied.

Note 2: Functional operation at voltages outside the range specified is not implied.

Note 3: Voltages greater than those listed may cause permanent damage.

8.7.1.4.1 DC Characteristics

The DC characteristics for the Smart Card Bus are contained in the following table.

Table 8-18 - Smart Card Bus DC Characteristics

Symbol	Parameter	Min.	Max.	Conditions
VIL	Input LOW voltage	-0.3V	+0.8V	-
VIH	Input HIGH voltage	+2.0V	+5.3V (See Note 1)	-
VOH	Output or bi-directional HIGH voltage	+2.4V	-	IOH ≥ | -2mA |
VOL	Output or bi-directional LOW voltage	-	+0.5V	IOL ≥ +2mA
IOH	Output current at HIGH voltage	-	-2mA	VOH ≥ +2.4V
IOL	Output current at LOW voltage	-	+2mA	VOL≤ +0.5V
IIH	Input current at HIGH voltage	-	±300μA	Input can sink and source
IIL	Input current at LOW voltage	-	±300μA	Input can sink and source

Note 1: This specifications is not a recommendation to use 5.3V as the output level, but should be considered a cautionary note that 3.3V designed technology should be sufficiently robust to tolerate 5.3V.

8.7.1.5 Notes on AC Characteristics

Note 1: Voltages specified as irrespective of power supply voltage applied.

Note 2: Functional operation at voltages outside the range specified is not implied.

Note 3: Voltages greater than those listed may cause permanent damage.

 © ISO/IEC 1999 - All rights reserved

--`,,```,,,,````-`-`,,`,,`,`,,`---

Copyright International Organization for Standardization
Provided by IHS under license with ISO
No reproduction or networking permitted without license from IHS Not for Resale

8.7.1.5.1 DC Characteristics

The DC characteristics for the Smart Card Bus are contained in the following table.

Table 8-19 - Smart Card Bus DC Characteristics

Symbol	Parameter	Min.	Max.	Conditions
VIL	Input LOW voltage	-0.3V	+0.8V	-
VIH	Input HIGH voltage	+2.0V	+5.3V (See Note 1)	-
VOH	Output or bi-directional HIGH voltage	+2.4V	-	IOH ≥ | -2mA |
VOL	Output or bi-directional LOW voltage	-	+0.5V	IOL ≥ +2mA
IOH	Output current at HIGH voltage	-	-2mA	VOH ≥ +2.4V
IOL	Output current at LOW voltage	-	+2mA	VOL≤ +0.5V
IIH	Input current at HIGH voltage	-	±300μA	Input can sink and source
IIL	Input current at LOW voltage	-	±300μA	Input can sink and source

Note 1: This specifications is not a recommendation to use 5.3V as the output level, but should be considered a cautionary note that 3.3V designed technology should be sufficiently robust to tolerate 5.3V.

8.8 Physical Internal NIU Specifications

These specifications support *User Rep*laceable Internal NIUs and *Manufacturer Rep*laceable Internal NIUs. Both of these specifications utilize the DAVIC Internal A0 connector (DIN 41612) as provided in Part 8.

For the User Replaceable Internal NIU, the NIU operates in a user accessible interface "bay" environment which supports the insertion and removal of the Internal NIU without the need to disassemble the STU. The NIU must provide an external A1/A1* connection, but may also provide interfaces for other non-DAVIC specified services (e.g.: analog bypass, etc.).

For the Manufacturer Replaceable Internal NIU, the NIU is an internal PCB "board" or "daughter card" in the STU. Removal and replacement of this type of Internal NIU may require disassembly of the STU, via a method not readily accomplished by end users (e.g.: mechanical removal of a STU cover, panel, etc.). The specific methods of removal are not part of this specification. The NIU must provide an external A1/A1* connection, but may also provide interfaces for other non-DAVIC specified services (e.g.: analog bypass, etc.).

8.8.1 User Replaceable Internal NIU Specifications:

The interface "bay" technique is illustrated in Figure 8.8-1. While this illustration shows the NIU Interface Bay opening in the rear of the STU, this part of ISO/IEC 16500 does not require the bay to be located in any specific portion of the STU.

© ISO/IEC 1999 - All rights reserved

Copyright International Organization for Standardization
Provided by IHS under license with ISO
No reproduction or networking permitted without license from IHS
Not for Resale

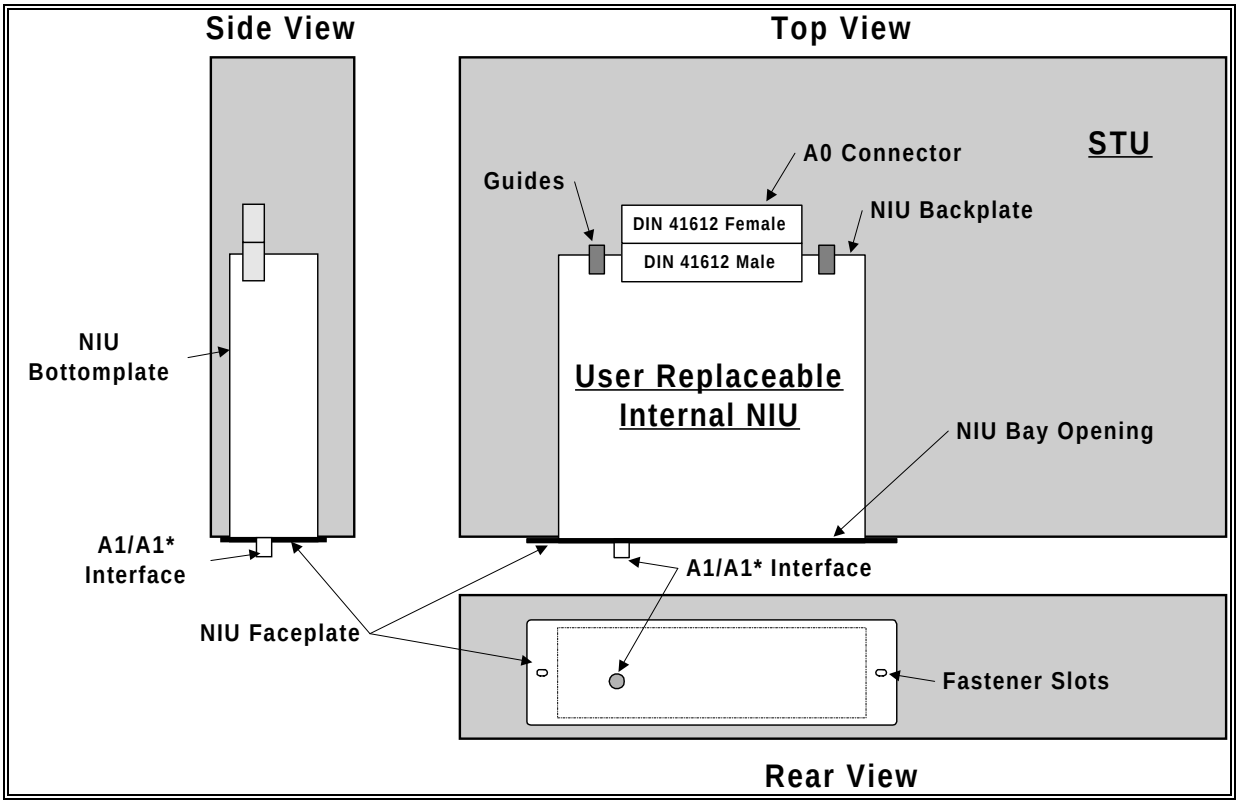

Figure 8.8-1: Internal NIU Overview

This part of ISO/IEC 16500 segments the User Replaceable Internal NIU requirements into three separate sections:

1. *NIU Enclosure* - section 8.8.1.1 covers the dimensions of the NIU, NIU Faceplate specifications, and NIU Backplate specifications.
2. *Interface Bay* - section 8.8.1.2 covers the dimensional requirements for the NIU's Interface Bay, Bay Opening Area specifications, and Bay Connector Area specifications.
3. *Internal NIU Emission* - section 8.8.1.3 covers the thermal and EMI emission requirements for the NIU Enclosure and Interface Bay environments.

8.8.1.1 User Replaceable NIU Enclosure Specifications

The User Replaceable NIU Enclosure essentially makes up the physical NIU that is inserted into the STU interface bay. At a minimum, the NIU Enclosure shall consist of:

1. A bottom plate
2. A face plate
3. A back plate

Side and top portions of the Enclosure may be provided, but are not required by this specification. The material requirements (e.g.: plastic, metal) for the Enclosure are also not part of this specification. In addition to the overall housing for NIU components, the Enclosure provides mounting for the Internal A0 connector, and support for Interface Bay guide posts. These features are shown in Figure 8.8-2.

8.8.1.1.1 User Replaceable NIU Enclosure Dimensions

The NIU Enclosure shall have overall dimensions of:

- **Depth = 150mm ± 1mm**, measured from the outside edge of the Backplate to the inside (e.g.: STU side) edge of the Faceplate
- **Width = 160mm ± 1mm**, measured from outside edge to outside edge of the Backplate

 © ISO/IEC 1999 - All rights reserved

Copyright International Organization for Standardization
Provided by IHS under license with ISO
No reproduction or networking permitted without license from IHS
Not for Resale

- **Height = 46mm ± 1mm**, measured form the outside edge of the Bottomplate to the outside edge of the top of the Backplate

These dimensions are shown in Figure 8.8-2. At a minimum, the NIU Enclosure must provide a Bottomplate, Backplate and a Faceplate conforming to this specification. If a right side, left side, or top is included in the Internal NIU's Enclosure, then the resultant NIU must conform to the overall dimensions provided by this specification.

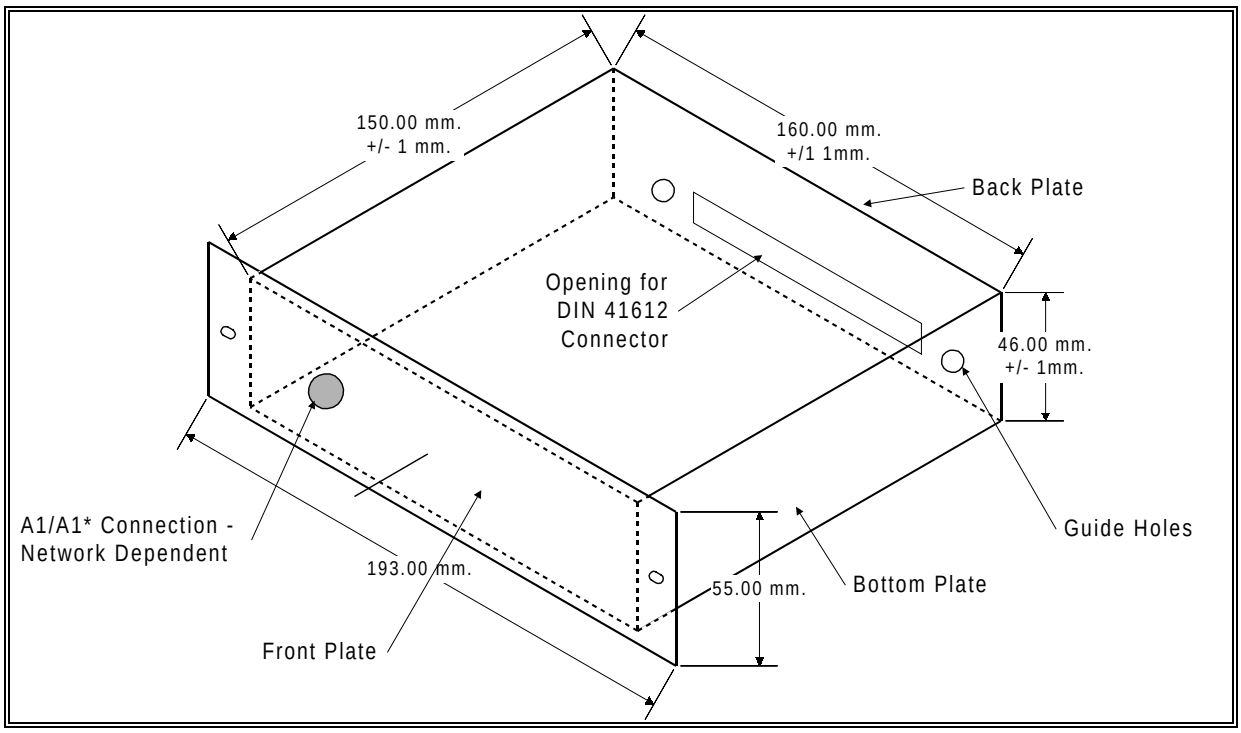

Figure 8.8-2: User Replaceable Internal NIU

8.8.1.1.2 User Replaceable NIU Faceplate Specifications

The NIU faceplate shall provide fastener Slots for securing the NIU to the STU, and an overlapping surface to ensure coverage of the Interface Bay opening. See Figure 8.8-3.

8.8.1.1.2.1 Faceplate Dimensions

The faceplate shall be constructed such that it extends 16mm beyond each side of the maximum allowable NIU Enclosure width of 161mm, and 4mm beyond the top and bottom edge of the maximum allowable NIU Enclosure height of 47mm, Thus, the Faceplate dimensions are 193 mm long by 55 mm high. The faceplate shall be centered on the out-facing end of the NIU enclosure, as shown in Figure 8.8-2 and Figure 8.8-3. The corners of the faceplate shall be rounded with a 2mm radius.

8.8.1.1.2.2 Fastener Slots

The faceplate shall provide two oval fastener Slots with dimensions of 5.4mm in width and 3.4mm in height. See the *"Slot Detail"* section of Figure 8.8-3 for more information. These Slots shall provide sufficient clearance to support the use of an M3-type screw as a fastening device. The centers for these Slots shall be located along the center line of the NIU Faceplate (27.5mm from the horizontal edge of the faceplate), 88.5 mm from either side of the vertical center of the NIU Faceplate (8mm from each vertical edge of the faceplate).

Copyright International Organization for Standardization
Provided by IHS under license with ISO
No reproduction or networking permitted without license from IHS Not for Resale

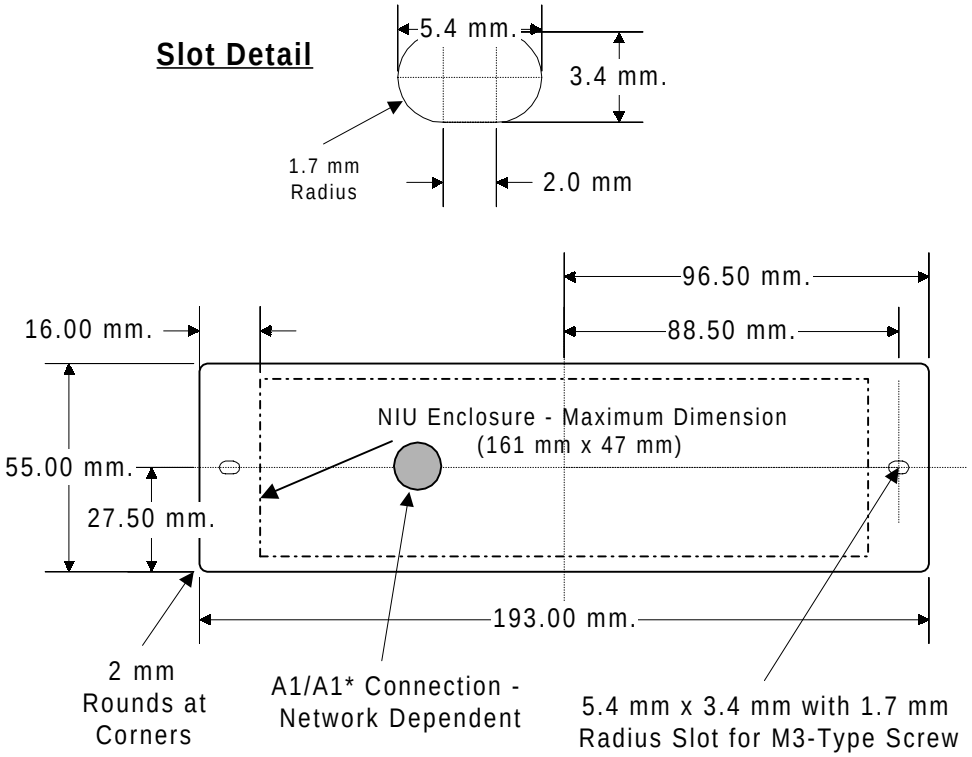

Figure 8.8-3: Face plate -- Rearview

8.8.1.1.3 User Replaceable NIU Backplate Specifications

The Backplate of the NIU Enclosure provides the interface support for the Internal A0 connector (DIN 41612 -- male) and guide holes for guide posts provided by the Interface Bay. See Figure 8.8-4 and Figure 8.8-5.

8.8.1.1.3.1 Connector Support

The Internal A0 connector shall be horizontally centered along the vertical center line of the NIU Enclosure, with Pin #1 located 15.5mm below the horizontal center line of the NIU Enclosure. See Figure 8.8-4. The Internal A0 connector shall extend 6mm beyond the outside edge of the Backplate. See Figure 8.8-5. This extension will ensure sufficient contact between the Interface Bay's connectors sockets and the NIU Enclosure's connector pins.

8.8.1.1.3.2 Guide Holes

The Backplate of the Internal NIU shall provide two 8mm diameter holes for supporting guide posts or other similar guiding structures in the Interface Bay. The centers for these holes shall be located along the horizontal center line of the A0 Connector (located 13mm from the horizontal centerline of the NIU Enclosure), 60mm on either side from the vertical centerline of the NIU Enclosure. See Figure 8.8-4. The NIU Enclosure shall reserve area inside the guide holes to allow a 10mm deep, 8mm high and 8mm wide penetration of the Interface Bay's guide structure. See Figure 8.8-5.

 © ISO/IEC 1999 - All rights reserved

--`,,```,,,,````-`-`,,`,,`,`,,`---

Copyright International Organization for Standardization
Provided by IHS under license with ISO
No reproduction or networking permitted without license from IHS
Not for Resale

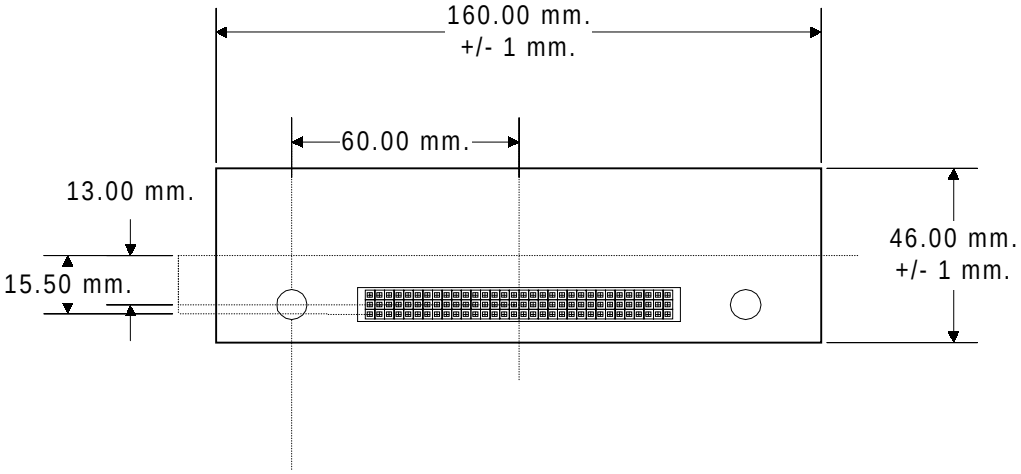

Figure 8.8-4: Backplate -- Front View

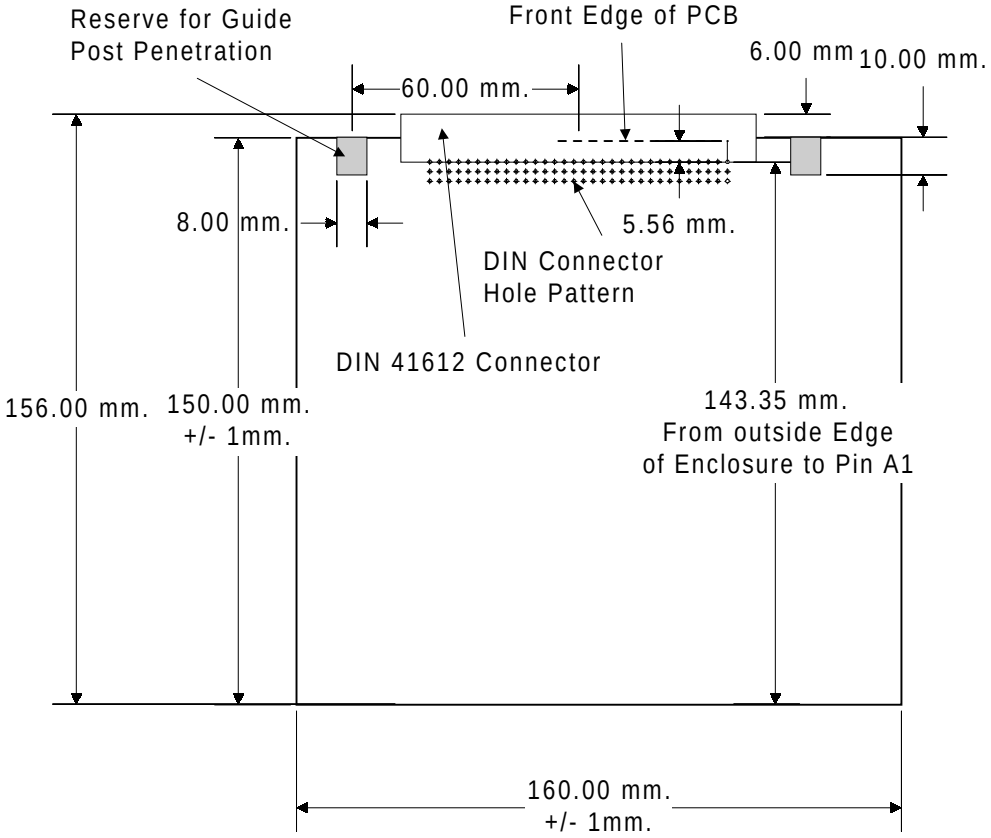

Figure 8.8-5: Bottomplate - Top View

8.8.1.2 User Replaceable Internal NIU Interface Bay Specifications

The A0 Internal Interface Bay ("Interface Bay") provides the opening in the wall of the STU and the cavity within the STU to accommodate the insertion of the User Replaceable Internal NIU. These specifications are specifically designed to work with the User Replaceable NIU specified in 8.8.1.1 above. The Interface Bay shall consist of an opening in the STU, a cavity for the NIU Enclosure, and a connector area to guide and engage the NIU Enclosure's A0 connector. These areas are identified in Figure 8.8-6.

Copyright International Organization for Standardization
Provided by IHS under license with ISO
No reproduction or networking permitted without license from IHS Not for Resale

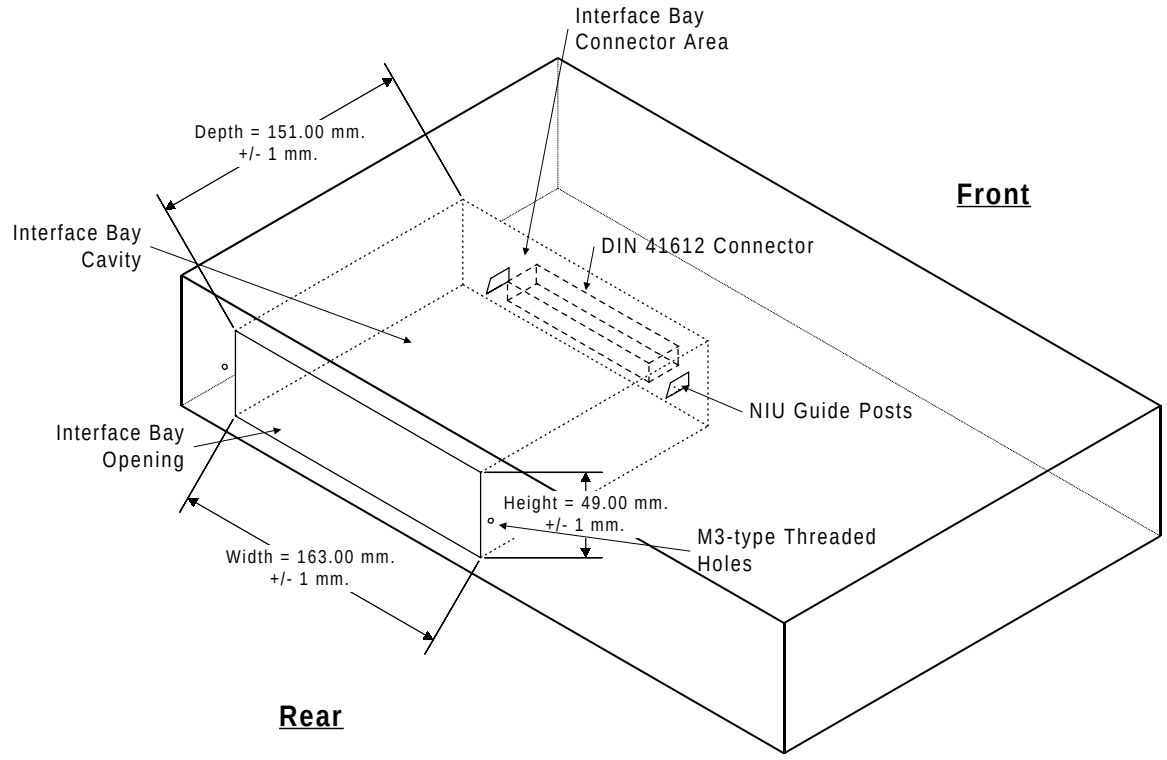

Figure 8.8-6: A0 Internal Interface Bay

8.8.1.2.1 User Replaceable Internal NIU Interface Bay Dimensions

The User Replaceable Interface Bay shall have an opening and cavity with overall dimensions of:

- **Depth = 151mm ± 1mm**, measured from the outside edge of the Bay Cavity Opening to the vertical plane of the face of the female A0 connector.
- **Width = 163mm ± 1mm**, measured from inside edge to inside edge of the Bay Cavity Opening.
- **Height = 49mm ± 1mm**, measured from inside edge to inside edge of the Bay Cavity Opening.

These dimensions are shown in Figure 8.8-6.

The Interface Bay shall also provide a buffer area around the Interface Bay opening, and a specialized area around the A0 connector area. See Figure 8.8-7.

8.8.1.2.2 Interface Bay Opening Area Specifications

The Bay Opening Area shall provide threaded fastener Holes for securing the NIU to the STU, and a buffer area to accommodate the NIU Enclosure Faceplate. Specifications for these feature are shown in the *"Bay Opening Area -- Rearview"* section of Figure 8.8-7.

8.8.1.2.2.1 Opening Area Buffer Zone

To accommodate the NIU Enclosure faceplate, the Interface Bay Opening Area shall reserve a buffer zone extending, at a minimum, 17mm beyond each side of the Interface Bay opening, and, at a minimum, 5mm beyond the top and bottom edge of the Interface Bay opening. The buffer zone surface shall be maintained as a flat area, and shall be clear of all obstructions including but not limited to connectors, or any other disruption of the buffer zone's surface.

 © ISO/IEC 1999 - All rights reserved

Copyright International Organization for Standardization
Provided by IHS under license with ISO
No reproduction or networking permitted without license from IHS
Not for Resale

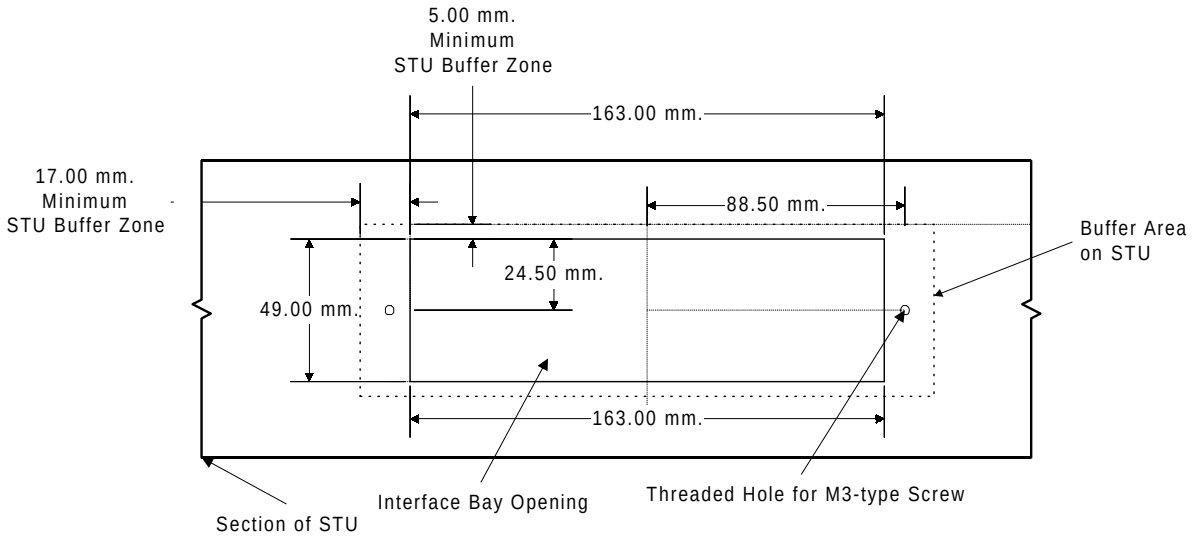

Figure 8.8-7: Interface Bay Opening Area - Rear View

8.8.1.2.2.2 Fastener Holes

The Interface Bay Opening Area shall provide two threaded fastener holes sufficient to accommodate an M3-type screw as shown in Figure 8.8-7. These holes shall be threaded at a pitch of 0.5mm. While this part of ISO/IEC 16500 does not require any specific fastener style (e.g.: slot-head, knurled, etc.), it shall be the responsibility of the STU to provide these fasteners as part of the Interface Bay.

The centers for these holes shall be located along the center line of the Interface Bay opening (24.5mm from the inside horizontal edge of the opening), 88.5mm from either side of the vertical center of the Interface Bay opening as shown in Figure 8.8-7.

8.8.1.2.3 Interface Bay Connector Area Specifications

The Connector Area of the Interface Bay provides the interface support for the Internal A0 connector (DIN 41612 -- female) and for guide structures for the NIU Enclosure. See Figure 8.8-8.

8.8.1.2.3.1 Connector Support

The Internal A0 connector shall be horizontally centered along the vertical center line of the Interface Bay cavity, with Pin Position 1 located 15.5mm below the horizontal center line of the Interface Bay cavity as shown in Figure 8.8-8. In addition, the Internal A0 connector shall be mounted such that the vertical plane of the connector's face is flush with the rear of the Interface Bay cavity (i.e.: 151mm, measured between the connector face and the outside edge of the Interface Bay opening) as shown in Figure 8.8-9. Further, there shall be sufficient space surrounding the Cavity opening for the female Interface Bay connector to allow the Male NIU connector to fully engage (see the DIN 41612 specification).

8.8.1.2.3.2 Guide Structures

The Connector Area of the Interface Bay shall provide two guide structures (e.g.: guide posts) of not greater than 7mm in diameter for proper alignment during the insertion of the NIU Enclosure into the Interface Bay. The centers for these guide structures shall be located along the horizontal center line of the A0 Connector (located 13mm from the horizontal centerline of the Interface Bay), 60mm on either side from the vertical centerline of the Interface Bay as shown in Figure 8.8-8. The Interface Bay guide structure shall not penetrate the NIU Enclosure greater than 10mm as shown in Figure 8.8-9. While this part of ISO/IEC 16500 does not require any particular guide structure form, these structures should be tapered such that alignment is achieved prior to the engagement of the A0 connector pins.

--`,,```,,,,````-`-`,,`,,`,`,,`---

Copyright International Organization for Standardization
Provided by IHS under license with ISO
No reproduction or networking permitted without license from IHS Not for Resale

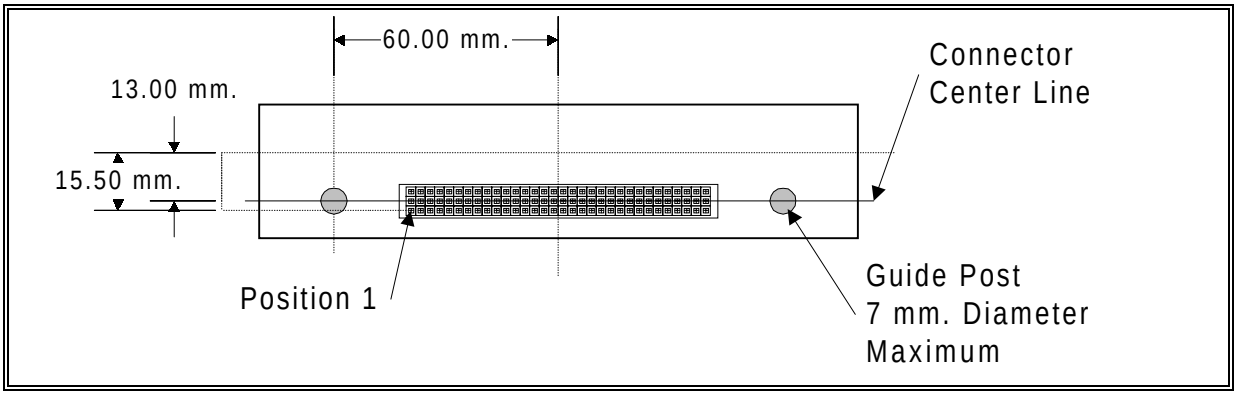

Figure 8.8-8: Interface Bay Connector Area -- Rear View

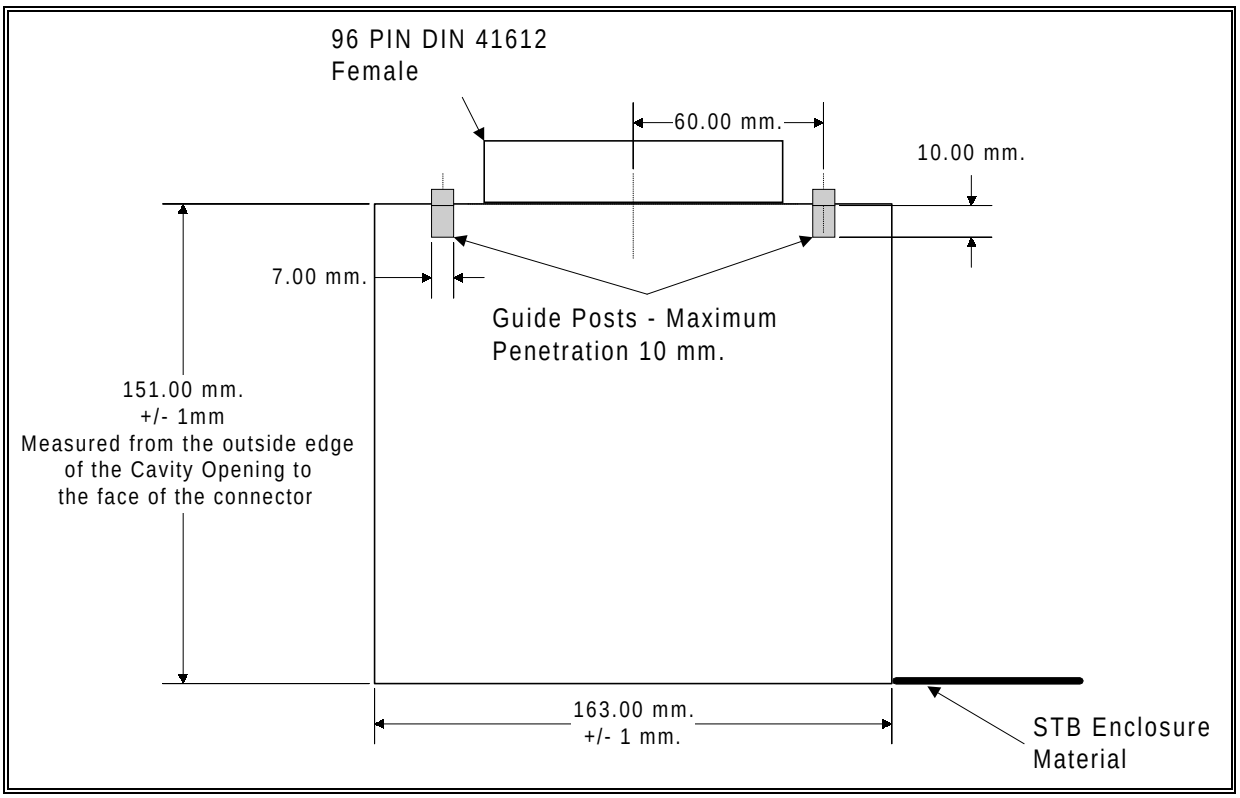

Figure 8.8-9: Interface Bay Cavity - Top View

8.8.1.2.4 Interface Bay Cavity

The Interface Bay Cavity is the volume within the STU described by the Width, Depth and Height shown in Figure 8.8-6. With the exception of the NIU Guide Posts, no components from the STU may impinge on this volume.

8.8.1.3 User Replaceable Internal NIU Emission Requirements

The NIU Enclosure and Interface Bay shall conform to the following EMI and Thermal emission specifications.

8.8.1.3.1 EMI Requirements

Beyond the provisions in section 8.8.1.1.2 [the NIU Enclosure Faceplate, which was designed to prevent Electromagnetic Interference (EMI) leakage to the surrounding STU environment], this part of ISO/IEC 16500 does not address EMI parameters. EMI emissions within the Interface Bay, whether they be sourced at the NIU or

 © ISO/IEC 1999 - All rights reserved

Copyright International Organization for Standardization
Provided by IHS under license with ISO
No reproduction or networking permitted without license from IHS Not for Resale

STU, are subject to procedures beyond the DAVIC specifications. Any NIU or STU should comply with whatever requirements exist in the device's expected operating domain.

8.8.1.3.2 Thermal Load and Dispersion

The A0 Internal NIU shall not dissipate more than 15 Watts of heat during its operation. The STU, while in its intended ambient operating environment, shall maintain an Interface Bay temperature of not more than 55°C during a sustained Internal NIU load of 15 Watts. This temperature shall be measured 5mm above and below the NIU maximum vertical dimension.

8.8.2 Manufacturer Replaceable Internal NIU Specifications:

The Manufacturer Replaceable NIU Specification uses a PCB Daughter-Card technique which is intended to facilitate easy installation by STU manufacturers of NIUs built by one or more NIU manufacturers. The specification is derived from the User Replaceable NIU specification.

The PCB "daughter card" technique is illustrated in Figure 8.8-10. While this illustration shows the NIU Interface in the rear of the STU, this part of ISO/IEC 16500 does not require the bay to be located in any specific portion or in any specific orientation of the STU.

The Manufacturer Replaceable NIU will mount as a parallel daughter card to the main (or secondary) STU board in the STU. The Faceplate will contact the STU vertical enclosure surface from inside the STU (as opposed to outside in the User Replaceable). The NIU is secured with two mounting screws between the Faceplate and the STU and the vertically mounted 41612 A0 connector which connects the NIU PCB to the STU PCB.

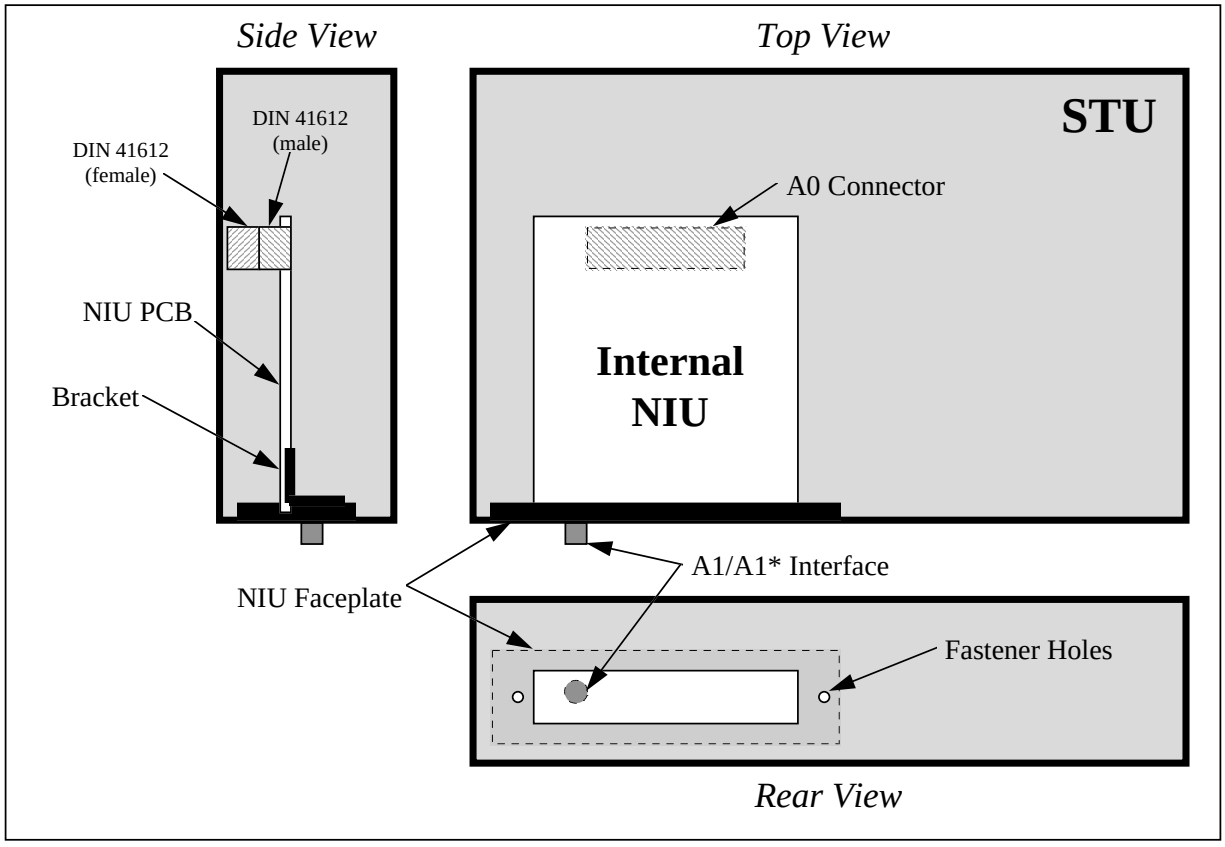

Figure 8.8-10: **Manufacturer Replaceable NIU Overview**

This part of ISO/IEC 16500 maximizes the commonality between PCB boards designed for the User Replaceable Internal NIU and PBC boards designed for the Manufacturer Replaceable Internal NIU. The specification makes it possible (though not mandatory) to use the same PCB that is used for the User Replaceable Internal NIU in the Manufacturer Replaceable NIU with only minor accommodations. The Manufacturer Replaceable Internal NIU requirements are segmented into three separate sections:

© ISO/IEC 1999 - All rights reserved

Copyright International Organization for Standardization
Provided by IHS under license with ISO
No reproduction or networking permitted without license from IHS
Not for Resale

1. *NIU* - section 8.8.2.1 covers the dimensions of the NIU, location of A0 Connector and NIU Faceplate specifications.
2. *STU Interface Bay* - section 8.8.2.2 covers the dimensional requirements for the STU in order to accept the Manufacturer Replaceable Internal NIU including connector location and mounting method.
3. *Manufacturer Replaceable NIU Emission* - section 8.8.2.3 covers the thermal and EMI emission requirements for the NIU Enclosure and Interface Bay environments.

8.8.2.1 Manufacturer Replaceable NIU PCB and Faceplate Specifications

The Manufacturer Replaceable NIU comprises the following components. Note that no enclosure is required or provided for in this specification. At a minimum, the NIU shall consist of:

1. A PCB with A0 Connector (DIN 41612 96 PIN Male)
2. A Faceplate attached to the PCB

The material requirements (e.g.: plastic, metal, etc.) for the NIU are not part of this part of ISO/IEC 16500 nor is the method for attaching the NIU PCB to the NIU Faceplate.

8.8.2.1.1 Manufacturer Replaceable NIU Dimensions

The NIU shall have overall dimensions of:

- **Maximum Depth = 150mm ± 1mm**, measured from the outside edge of the Faceplate to back edge of the PCB.
- **Maximum Width = 160mm ± 1mm**, measured from outside edge to outside edge of the PCB
- **Maximum Height = 50mm ± 1mm**, measured from 5.5 mm below the bottom surface of the NIU PCB which contains the A0 Connector.
- It is important to note that the NIU may only extend 4mm (as opposed to 5.5mm elsewhere) below its PCB for the 30 mm nearest the NIU faceplate opening. This restriction is to accommodate a 30mm by 1.5mm volume along underfacing rear edge of the NIU to accommodate other STU connectors on the STU's main PCB.

These dimensions are shown in Figure 8.8-11 and Figure 8.8-15.

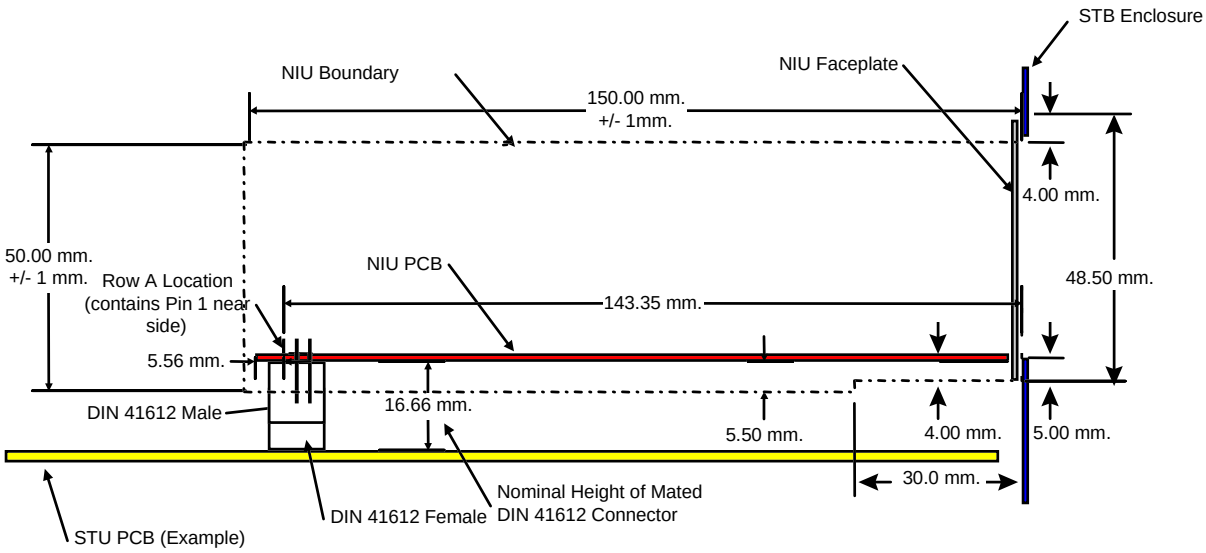

Figure 8.8-11: Side View Internal NIU Dimensions

8.8.2.1.2 A0 Connector

The Internal A0 connector shall be horizontally centered along the vertical center line of the NIU, with the center of Pin #1 located 143.35 mm from the outside surface of the Faceplate. This puts the position of the solder pins of

 © ISO/IEC 1999 - All rights reserved

Copyright International Organization for Standardization
Provided by IHS under license with ISO
No reproduction or networking permitted without license from IHS
Not for Resale

the A0 connector at the same location required for the User Replaceable NIU thus making it possible to use the same PCB design for both the User and Manufacturer Replaceable Internal NIUs.

8.8.2.1.3 Faceplate Specifications

The NIU faceplate shall provide threaded holes for M3-type screw for securing the NIU to the STU and an overlapping surface to ensure coverage of the Interface Bay opening. Specifications for these features are shown in Figure 8.8-12.

8.8.2.1.3.1 Faceplate Dimensions

The faceplate shall be constructed such that it extends 3 mm beyond each side of the nominal NIU width of 160mm, and directly even with the nominal top of the NIU, and 1.5 mm short of the bottom of the nominal NIU height of 50mm. Thus, the Faceplate dimensions are 166 mm long by 48.50 mm high. The faceplate shall be mounted on the out-facing end of the NIU as shown in Figure 8.8-12 relative to the nominal height and width dimensions of the NIU.

8.8.2.1.3.2 Fastener Holes

The faceplate shall provide two threaded fastener holes sufficient to accommodate an M3-type screw. These holes shall be threaded at a pitch of 0.5mm. The centers for these holes shall be located along the center line of the Faceplate (27.5mm from horizontal edge of the faceplate), 88.5mm from either side of the vertical center of the Faceplate (8mm from each inside of the Faceplate). See Figure 8.8-12. The STU manufacturer is required to provide the screws for attaching the NIU to the STU enclosure.

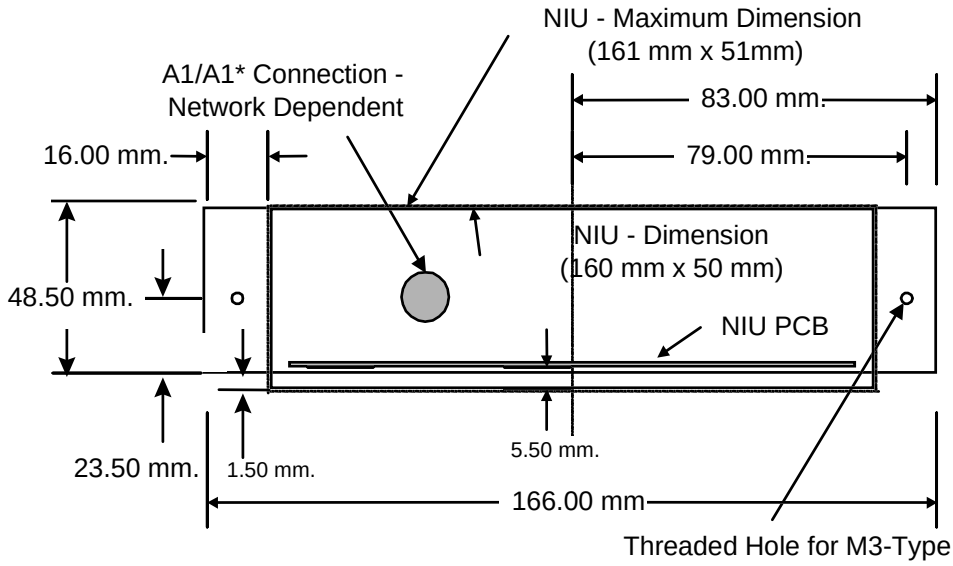

Figure 8.8-12: Faceplate of Manufacturer Replaceable NIU

8.8.2.2 Manufacturer Replaceable Internal NIU STU Interface Bay Specifications

The A0 Internal Interface Bay (“Interface Bay”) provides the STU features needed to accommodate the installation of the Manufacturer Replaceable NIU. The Interface Bay shall consist of an opening in the STU, a volume in the STU for the NIU, and a mating vertical connector for the NIU’s A0 connector. These items are shown in Figure 8.8-13.

Copyright International Organization for Standardization
Provided by IHS under license with ISO
No reproduction or networking permitted without license from IHS Not for Resale

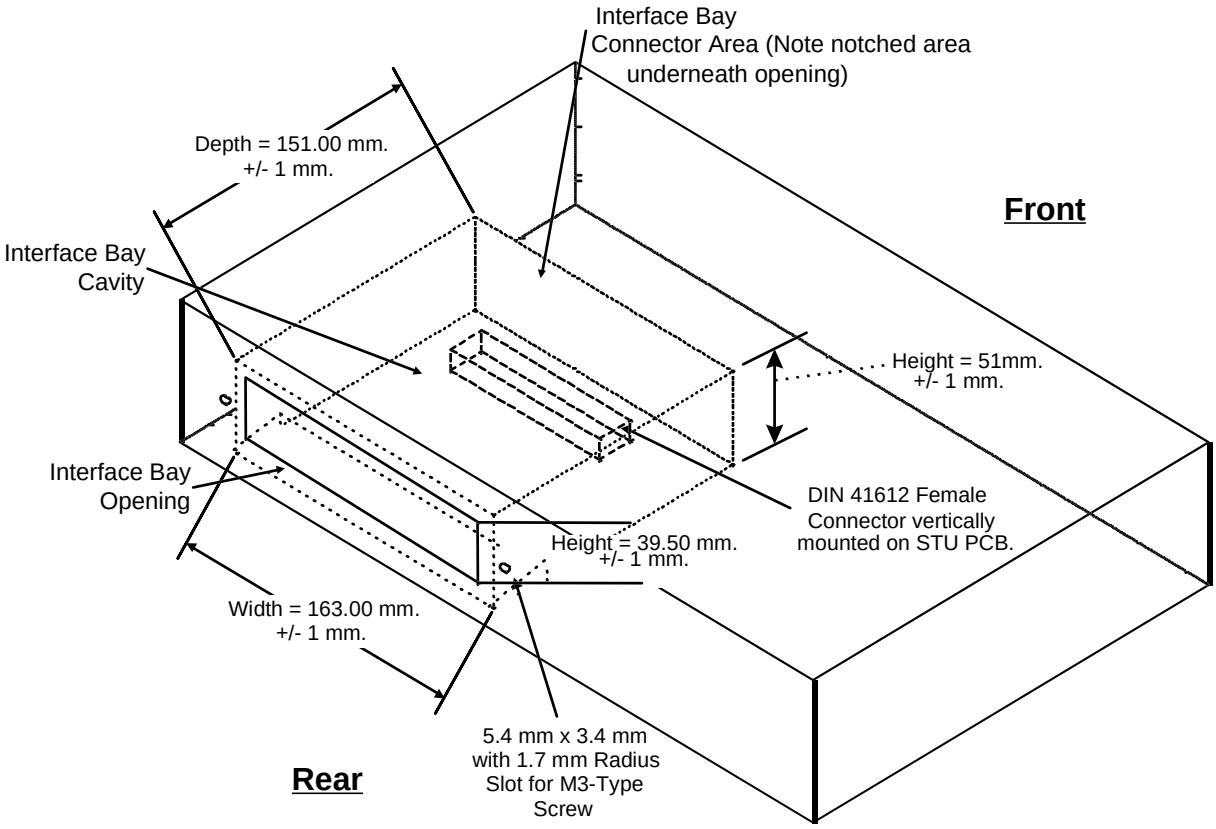

Figure 8.8-13: STU Interface Bay for Manufacturer Replaceable Internal NIU

8.8.2.2.1 Interface Bay Dimensions

The Interface Bay shall have an opening and clear volume in the STU with overall dimensions of:

- **Depth = 151mm ± 1mm**, measured from the inside edge of the Interface Bay Opening.
- **Width = 163mm ± 1mm**, measured from inside edge to inside edge of the Bay Cavity Opening.
- **Height = 51mm ± 1mm**, measured from inside edge to inside edge of the Bay Cavity Opening.

These dimensions are shown in Figure 8.8-13.

A notch in the NIU's clear volume shall exist in the area underneath the opening edge of the PCB of the NIU such that connectors may be mounted on the STU's main PCB underneath the PCB of the NIU. This notched area shall run the entire length of the NIU, and consist of a 30mm deep, 1.5mm high volume. This notched area is shown in Figure 8.8-11.

The Interface Bay shall also provide a buffer area around the Interface Bay opening. Additional specifications regarding these Interface bay components are provided below and in Figure 8.8-14.

 © ISO/IEC 1999 - All rights reserved

--`,,```,,,,````-`-`,,`,,`,`,,`---

Copyright International Organization for Standardization
Provided by IHS under license with ISO
No reproduction or networking permitted without license from IHS
Not for Resale

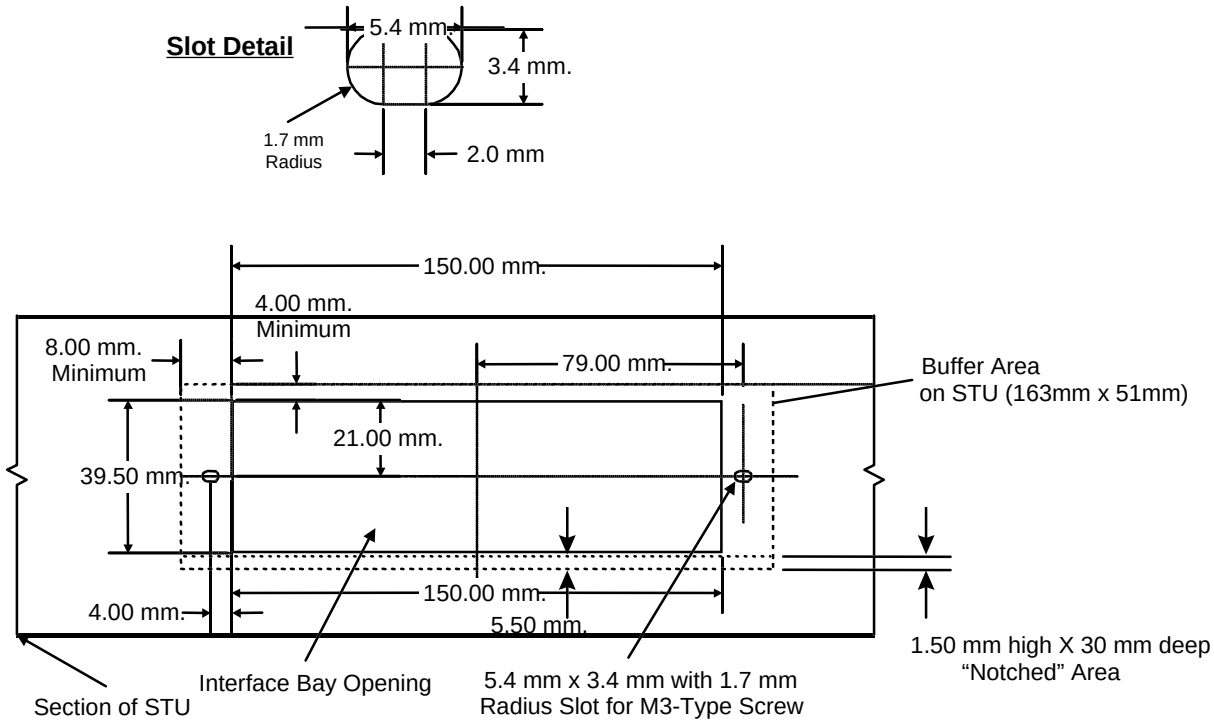

Figure 8.8-14: Interface Bay Opening

8.8.2.2.2 Interface Bay Opening Area Specifications

The Bay Opening Area shall provide clearance slots for securing the NIU to the STU, and a buffer area to accommodate the NIU Enclosure Faceplate. Specifications for these features are shown below and in Figure 8.8-14.

8.8.2.2.2.1 Fastener Holes

The STU Interface Bay shall provide two oval fastener holes (slots) with dimensions of 5.4mm in width and 3.4mm in height. See the *"Hole Detail"* section of Figure 8.8-14 for more information. These holes provide sufficient clearance to support the use of an M3-type screw as a fastening device. The centers for these holes shall be located along the center line of the Interface Bay opening, 21.0 mm from the upper horizontal edge of the Interface Bay opening. and 79.0 mm from either side of the vertical center of the STU Interface Bay.

8.8.2.2.2.2 Opening Area Buffer Zone

To accommodate the NIU Enclosure faceplate, the Interface Bay Opening Area shall reserve a buffer zone extending, at a minimum, 8mm beyond each side of the Interface Bay opening, and, at a minimum, 4mm beyond the top edge of the Interface Bay opening and 5mm beyond the lower edge of the Interface Bay opening. The buffer zone surface shall be maintained as a flat area, and shall be clear of all obstructions including but not limited to fasteners, connectors, or any other disruption of the buffer zone's surface.

8.8.2.2.2.3 Interface Bay Connector Area Specifications

The Interface Bay shall provide a female A0 connector whose PCB shall be mounted as shown in Figure 8.8-11. The distance between the bottom of the NIU PCB and the top of the STU A0 Connector PCB is nominally 16.66 mm based on the DIN 41612 specification. Specification of this distance is outside the scope of ISO/IEC 16500.

Positioning of the Female A0 connector relative to the STU enclosure is illustrated in Figure 8.8-15.

Copyright International Organization for Standardization
Provided by IHS under license with ISO
No reproduction or networking permitted without license from IHS Not for Resale

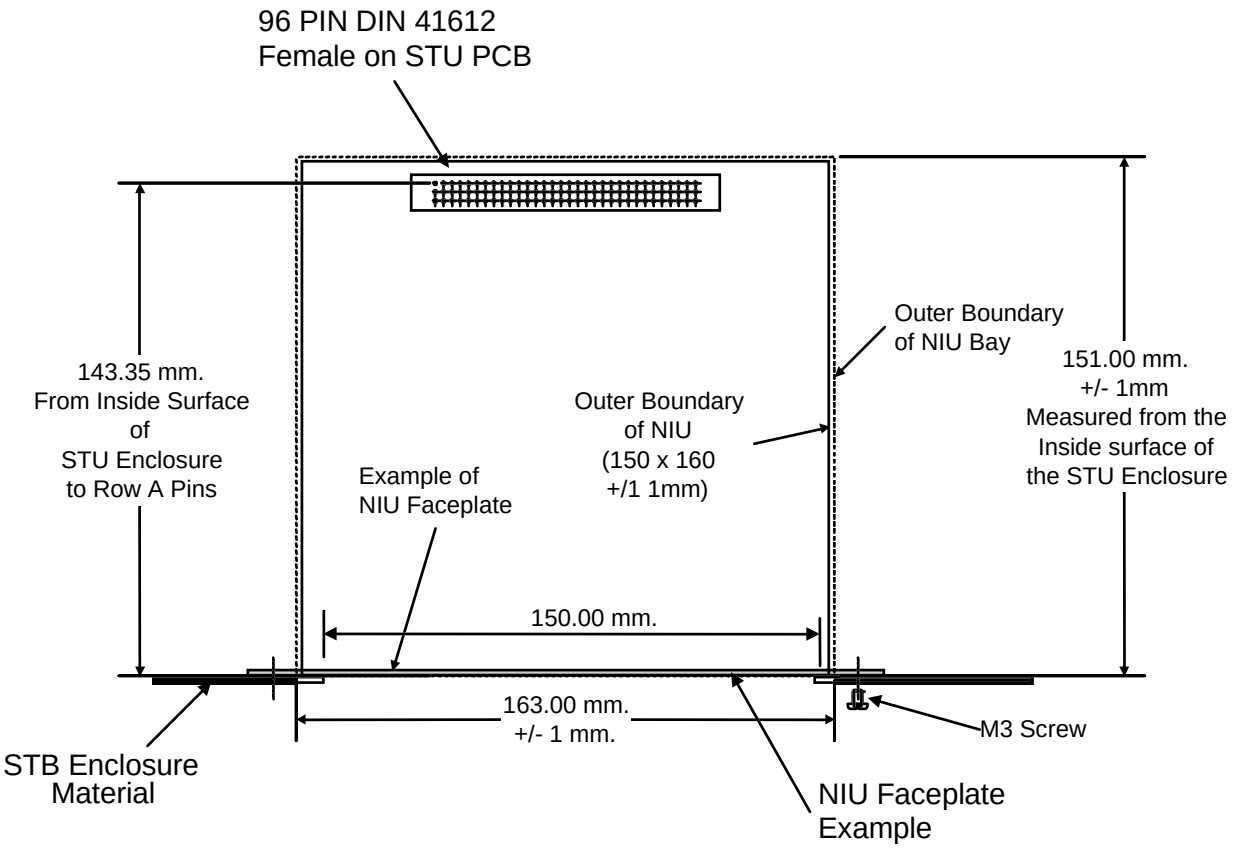

Figure 8.8-15: Interface Bay Top View

8.8.2.3 Manufacturer Replaceable NIU Emission Requirements

The NIU Enclosure and Interface Bay shall conform to the following EMI and Thermal emission specifications.

8.8.2.3.1 EMI Requirements

This part of ISO/IEC 16500 will not address EMI parameters. EMI emissions within the Interface Bay, whether they be sourced at the NIU or STU, are subject to procedures beyond the DAVIC specifications. The resultant STB created by the combination of an NIU and an STU shall comply with whatever requirements exist in the device's expected operating domain.

8.8.2.3.2 Thermal Load and Dispersion

The A0 Internal NIU shall not dissipate more than 15 Watts of heat during its operation. The STU, while in its intended ambient operating environment, shall maintain an Interface Bay temperature of not more than 55°C during a sustained Internal NIU load of 15 Watts. This temperature shall be measured 5mm above the and below the NIU maximum allowed dimension.

8.9 External A0 Specification (Digital Part)

The Digital Part of the External A0 consists of the High-Speed Downstream Data Bus, Bi-Directional Data Bus, Local Control Bus, and Reset Bus.

External A0 interfaces shall use the IEEE 1394 standard, S200 speed or greater, as the basis for the physical layer implementation of the all logical connections except the optional analog pass-through function. The analog portion of the External A0 interface shall be supported with RCA-type connectors and compatible patch cords. The physical configuration of the External A0 interface shall be such that:

 © ISO/IEC 1999 - All rights reserved

Copyright International Organization for Standardization
Provided by IHS under license with ISO
No reproduction or networking permitted without license from IHS
Not for Resale

1. The STU shall support the bandwidth required by the NIU (which for DAVIC 1.3.1a NIUs cannot exceed 200 Mbps) IEEE 1394 logical bus implementing the A0 interface to the A0 interface functions. Any additional bus capacity above the capacity needed for the A0 functions may be shared with other IEEE 1394 interfaces which the STU may support, but not another External A0 interface. *[Note: In certain circumstances, sharing of the STU's IEEE 1394 logical bus could create a loss of functionality. Implementers are cautioned that care must be taken to ensure that the bandwidth of IEEE 1394 logical bus will not be oversubscribed.]*
2. The NIU shall not share the 1394 logical bus implementing the A0 interface with any other 1394 interface which it may provide.
3. The STU shall advise the user if shared configurations may limit other STU functions, or if an invalid A0 NIU configurations exists. The STU shall ensure that sufficient bandwidth if available on the logical 1394 bus for proper operation of the NIU prior to sending the Wake_Up request as defined Part 7, Section 12.

8.9.1 Electrical Specifications

The External A0 Interface electrical specifications shall conform to the requirements on IEEE 1394-1995 which are specified in [IEC 61883]. At a minimum, the External A0 interface shall operate at the S200 speed.

Configuration and initialization of the IEEE 1394 physical layer shall comply to Part 1 of [IEC 61883]. On reception of the ***Wake_up*** message as defined in DAVIC 1.3.1a Part 7, Section 12, the NIU will allocate the appropriate bandwidth and channel resources required for the High Speed Downstream Data Bus and the Bi-Directional Data Bus. The NIU will also establish the connections by means of the plug control registers as defined in [IEC 61883] Part 1. For the High-Speed Downstream data bus the plug control registers oPCR[0] and iPCR[0] shall be used whereas for the Bi-directional Cell Bus the plug control registers oPCR[1] and iPCR[1] shall be used.

Additionally, the Unit_directory of a NIU node shall make accessible the NIU Configuration Table per DAVIC 1.3.1a Part 7 Section 12.5.2.1. Similarly, the Unit_directory of the STU shall make accessible the STU Configuration Table per DAVIC 1.3.1a Part 7 Section 12.5.3.1. Once the 1394 configuration has taken place, the STU performs initialization per DAVIC 1.3.1a Part 7 Section 12.3.1.2.

8.9.1.1 High Speed Downstream Data Bus TC Specifications

The Transmission Convergence layer for the MPEG-2-TS data stream on this bus shall be defined as in Part 4 of [IEC 61883] for isochronous transmission. Note that this part of ISO/IEC 16500 uses the Common Isochronous Packet Layer (CIP) so jitter across A0 is minimized.

8.9.1.2 Bi-Directional Data Bus TC Specifications

The Transmission Convergence layer for the ATM/AAL5 data stream on this bus shall be defined as in Part 4 of [IEC 61883] for isochronous transmission and the following modifications and features:

- A source packet shall consist of a four byte Time Stamp as per Part 4 of [IEC 61883], followed by one ATM Cell (53 bytes) padded with 3 bytes to align the quadlet boundary for a total of 60 bytes (15 quadlets) and DBS="00001111". A source packet shall be carried in one data block (FN=00)
- The Time Stamp may be used to ensure that jitter induced across the A0 interface is reduced in order to comply with DAVIC requirements for STU S1 jitter (see Section 8.3).
- Flow control shall be performed using the concept of plugs and plug control registers as specified in Clause of Part 1 of [IEC 61883]. Transmission and reception of isochronous data flows is controlled by output/input plug control registers (iPCR/oPCR) and an input/output plug master register. The value of the register shall be equal to "1" when the flow is enabled, and decremented (i.e.: set to "0") when the plug is said to be unconnected. Per Clause 7.4 of Part 1 of [IEC 61883], a plug shall cease transmitting an isochronous data flow within 250 microseconds after becoming unconnected.
- The ATM bit stream shall be carried by a single 1394 isochronous channel in each direction.

Both the PHY and ATM layers of the Bi-Directional Bus will require buffering for about 250 μs of cell data to cover the queuing of incoming cell data while awaiting the next isochronous interval (which could be delayed by an ongoing asynchronous subaction). The delay should never cause an isochronous interval to be missed, except

--`,,```,,,,````-`-`,,`,,`,`,,`---

Copyright International Organization for Standardization
Provided by IHS under license with ISO
No reproduction or networking permitted without license from IHS Not for Resale

in the case of a Bus Reset. During this time cells may be dropped by either layer. This scheme is illustrated in Figure 8.9-1.

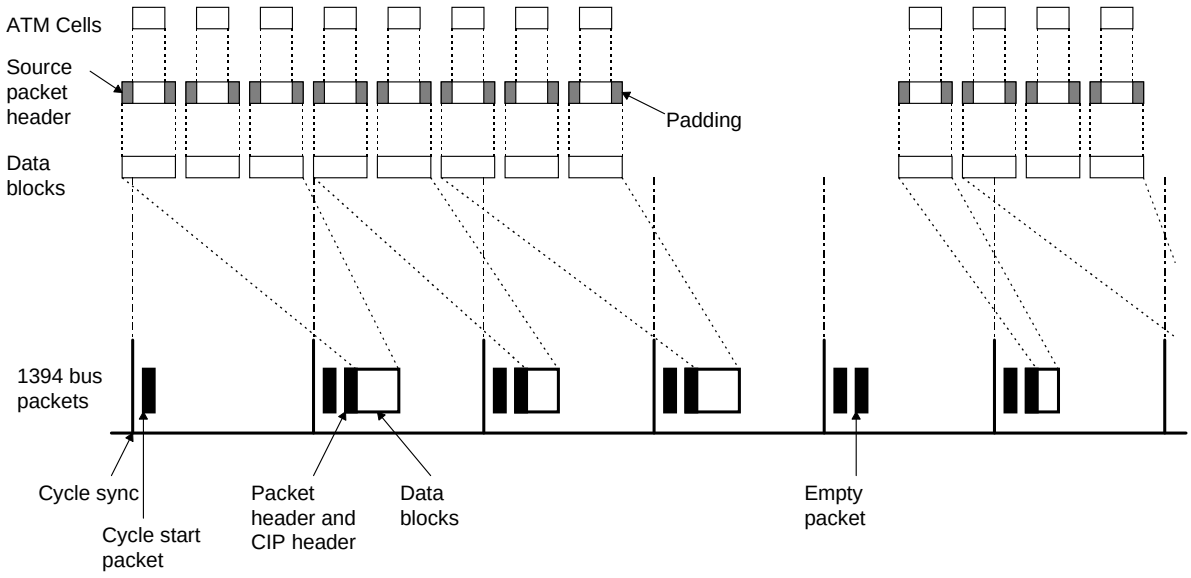

Figure 8.9-1 - ATM Cell Transmission Convergence

8.9.1.3 Local Control Data Bus TC Specifications

For the External A0 Interface, the Local Control Bus shall comply to [IEC 61883] for asynchronous data transmission with the following specifications:

The Functional Control Protocol (FCP) shall be as defined in Clause 9 of Part 1 of [IEC 61883]. For the Local Control Bus messages, the STU and NIU shall use the frame format specified in Figure 5-1 of [AV/C DICS] for the AV/C Command Frame. This frame format is illustrated in Figure 8.9-2.

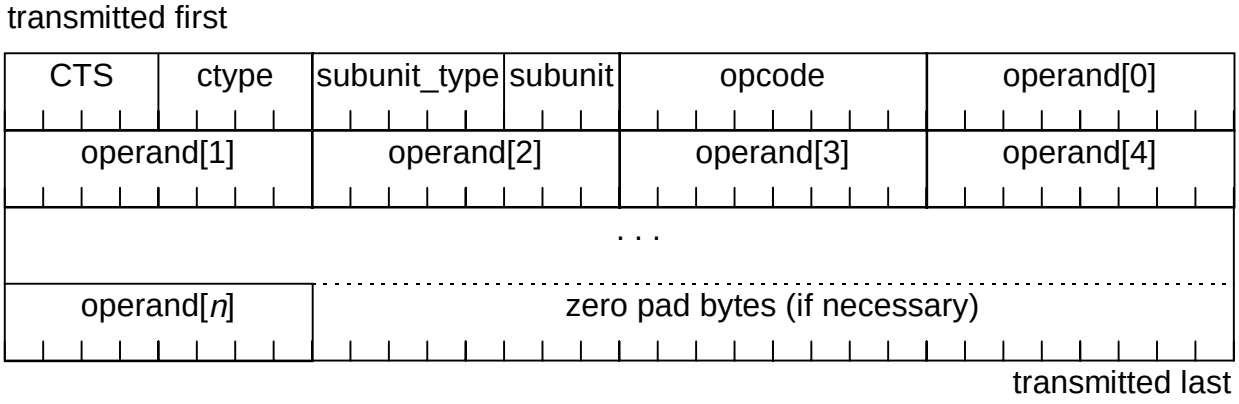

CTS = 0011 (provisional, to be defined in ref IEC 1883 CDV)
ctype = 0000 (other values reserved for future use)
subunit_type = 00000 (other values reserved for future use)
subunit = 000 (other values reserved for future use)

Figure 8.9-2 - FCP Frame Format

 © ISO/IEC 1999 - All rights reserved

Copyright International Organization for Standardization
Provided by IHS under license with ISO
No reproduction or networking permitted without license from IHS
Not for Resale

The “opcode” and “operand” fields are as defined in DAVIC 1.3.1a Part 7, Section 12.

8.9.1.4 Reset Bus Specifications

For the External A0 Interface, the Reset Bus shall use the RESET_START register as specified in Section 8.3.2.2.4 of [IEEE 1394-1995]. In accordance to the CSR specification [ISO/IEC 13213], a write (data contents is irrelevant) to this register is equivalent to a power down/power-up cycle of the specific node (either NIU or STU).

8.9.2 Physical and Mechanical Specifications

The External A0 interface connector shall comply with the Cable Physical Layer [IEEE 1394-1995] requirements for physical and mechanical specifications. The STU and NIU shall be equipped with IEEE 1394 6-pin sockets. The connection between the NIU and STU shall be accomplished via a 1394 compliant cable, equipped with IEEE 1394 6-pin plugs. The STU shall be capable of supplying a minimum power of 15 Watts to the NIU in accordance with [IEEE 1394-1995]. External NIUs needing power in excess of 15 Watts may be required to have additional power sources provided beyond what is specified for the A0 interface.

External A0 interface pin sockets shall be identified through markings that include “DAVIC External A0” or other equivalent terms.

8.10 Optional External A0 Specification (Analog Pass-Through Part)

Electrical, Physical, and Mechanical specifications:

- Video Channel -- STU and NIU shall have yellow RCA-type female connectors. The connection between the NIU and STU shall be accomplished via a 75 Ohm patch cable.
- Audio Channel, Right -- STU and NIU shall have red RCA-type female connectors. The connection between the NIU and STU shall be accomplished via a 75 Ohm patch cable, equipped with male RCA-type connectors.
- Audio Channel, Left -- STU and NIU shall have white RCA-type female connectors. The connection between the NIU and STU shall be accomplished via a 75 Ohm patch cable, equipped with male RCA-type connectors.

9. STU Dataport Interface

9.1 Overview of the STU Dataport

The Dataport connector is defined to provide the STU with the capability to connect to various peripheral devices. These devices could be used to access DAVIC functionality’s, or simply to augment applications resident within the DAVIC STU. Requirements for the Dataport connector specification include functions included in applications identified in DAVIC Part 9 such as: MHEG5 applications, MPEG Audio and Visual streams, Text and Graphics. In general, these requirements have been segmented into MPEG based applications and IP based applications.

This specification is segmented into three parts: a normative STU Multimedia Dataport tool, an informative STU PC Dataport tool, and an informative STU Parallel Dataport tool. The normative specification was selected on the basis that it provided the single best tool to meet the specific applications expected to be used for the Dataport, namely IP traffic for PCs and MPEG traffic for multimedia consumer appliances. The informative STU Dataport tools are provided by DAVIC to support widely deployed existing peripheral devices which may not support the STU Multimedia tool technology.

9.2 STU Multimedia Dataport

The STU Dataport shall be a fully functional, fully interoperable IEEE 1394-1995 interface. This includes supporting many devices such as camcorders, VCRs, and Computers on the same IEEE 1394 bus as the STU Dataport. This part of ISO/IEC 16500 also defines IP over IEEE 1394-1995 to allow Internet access to the PC. This part of ISO/IEC 16500 supports all derivatives of 1394 including S100, S200, and S400 interfaces. See Part 7 of DAVIC 1.3.1a for specifications regarding MTU size, an encapsulation format, ARP packet formats, and IP Broadcast & Multicast.

© ISO/IEC 1999 - All rights reserved

Copyright International Organization for Standardization
Provided by IHS under license with ISO
No reproduction or networking permitted without license from IHS
Not for Resale

9.2.1 Physical Specification (PMD)

The physical connector shall comply to the six pin connector defined in [IEEE 1394-1995]. The STU is not required to implement a power source as defined in Section 4.2.2.7 of [IEEE 1394-1995] to comply with the DAVIC STU Multimedia Dataport specification.

9.2.2 Electrical Specification (PHY)

The electrical specifications shall comply to [IEEE 1394-1995].

9.2.3 Transmission Convergence Layer Specification (TC)

9.2.3.1 TC Layer for MPEG Applications

For MPEG traffic, the transmission convergence layer shall comply to [IEC 61883].

9.2.3.2 TC Layer for IP Applications

For IP traffic, IP encapsulation shall comply to the LLC/SNAP as specified in ISO/IEC 16500-5.

9.3 STU PC Dataport - INFORMATIVE Specification.

This optional STU PC Dataport connector, if implemented, should comply to the IEEE 10Base-T Ethernet interface as specified in [ISO/IEC 8802.3].

9.3.1 Physical Specification (PMD)

The physical connector shall conform to the RJ-45 connector as specified in [ISO/IEC 8802.3].

9.3.2 Electrical Specification (PHY)

The electrical characteristics shall comply to [ISO/IEC 8802.3].

9.3.3 Transmission Convergence Layer Specification (TC)

The transmission convergence layer shall comply to [ISO/IEC 8802.3].

9.4 STU Parallel Dataport - INFORMATIVE Specification

This optional STU Parallel Dataport connector is based on the [IEEE 1284-1994] standards.

If implemented, the Physical Specification (PMD) and the Electrical Specification (PHY) should comply to [IEEE 1284-1994].

10. Tools for digitizing the SPS/SPS core network and SPS internal networks

DAVIC supports Physical Interfaces for interconnections between cascaded SPS entities with and without an intervening core network (across A11/A10) and for networks used to interconnect various hosts within the SPS (across A9*).
DAVIC supports the use of any of: ATM on SDH networks, DVB Asynchronous Serial Interface (ASI) and/or Unshielded Twisted Pair Ethernet (10BaseT or 100BaseT). Where ATM is used across A11/A10, the maximum CDV limit is defined to be 3ms for the receive side of the A10 reference point.

 © ISO/IEC 1999 - All rights reserved

Copyright International Organization for Standardization
Provided by IHS under license with ISO
No reproduction or networking permitted without license from IHS Not for Resale

Table 10-1 - SPS/SPS core network and SPS internal network interfaces.

Physical Interface		Bit Rate	References
SDH	STM-1	155.52 Mbit/s	[ITU-T G.652], [ITU-T G.957], [ITU-T G.707], [ITU-T G.708], [ITU-T G.709] [ITU-T I.413], [ITU-T I.432]
	STM-4	622.08 Mbit/s	[ITU-T G.652], [ITU-T G.957], [ITU-T G.707], [ITU-T G.708], [ITU-T G.709], [ITU-T I.413], [ITU-T I.432]
DVB	ASI	270 Mbit/s	[CENELEC EN50083-9]
Ethernet	10BaseT	10 Mbit/s	[ISO/IEC 8802-3]
	100BaseT	100 Mbit/s	[ISO/IEC 8802-3]

Copyright International Organization for Standardization
Provided by IHS under license with ISO
No reproduction or networking permitted without license from IHS Not for Resale

ICS 35.040

Price based on 243 pages

© ISO/IEC 1999 – All rights reserved

Copyright International Organization for Standardization
Provided by IHS under license with ISO
No reproduction or networking permitted without license from IHS

Not for Resale