INTERNATIONAL STANDARD

ISO/IEC 16500-3

First edition
1999-12-15

Information technology — Generic digital audio-visual systems —

Part 3:
Contours: Technology domain

Technologies de l'information — Systèmes audiovisuels numériques génériques —

Partie 3: Contours: Domaine des technologies

Reference number
ISO/IEC 16500-3:1999(E)

© ISO/IEC 1999

Copyright International Organization for Standardization
Provided by IHS under license with ISO
No reproduction or networking permitted without license from IHS

Not for Resale

PDF disclaimer

This PDF file may contain embedded typefaces. In accordance with Adobe's licensing policy, this file may be printed or viewed but shall not be edited unless the typefaces which are embedded are licensed to and installed on the computer performing the editing. In downloading this file, parties accept therein the responsibility of not infringing Adobe's licensing policy. The ISO Central Secretariat accepts no liability in this area.

Adobe is a trademark of Adobe Systems Incorporated.

Details of the software products used to create this PDF file can be found in the General Info relative to the file; the PDF-creation parameters were optimized for printing. Every care has been taken to ensure that the file is suitable for use by ISO member bodies. In the unlikely event that a problem relating to it is found, please inform the Central Secretariat at the address given below.

© ISO/IEC 1999

All rights reserved. Unless otherwise specified, no part of this publication may be reproduced or utilized in any form or by any means, electronic or mechanical, including photocopying and microfilm, without permission in writing from either ISO at the address below or ISO's member body in the country of the requester.

ISO copyright office
Case postale 56 • CH-1211 Geneva 20
Tel. + 41 22 749 01 11
Fax + 41 22 734 10 79
E-mail copyright@iso.ch
Web www.iso.ch

Printed in Switzerland

Copyright International Organization for Standardization
Provided by IHS under license with ISO
No reproduction or networking permitted without license from IHS

© ISO/IEC 1999 – All rights reserved

Not for Resale

Contents Page

Foreword ..... **iv**
Introduction ..... **v**
1. Scope **1**
2. Normative references **1**
3. Definitions **5**
4. Acronyms and abbreviations **5**
5. Conventions **8**
6. Concepts — Contours, Systems and Interoperability **8**
Annex A (normative) **Enhanced Digital Broadcast (EDB) Technology Domain** **11**
A.1 Scope **11**
A.2 Overview of system functions **11**
A.3 Cross Reference between System Requirements and System Functions **17**
A.4 List of tools required to implement the system functions **28**
Annex B (normative) **Interactive Digital Broadcast (IDB) Technology Domain** **51**
B.1 Scope **51**
B.2 Overview of system functions **51**
B.3 Cross Reference between System Requirements and System Functions **57**
B.4 List of tools required to implement the system functions **68**
Bibliography **94**

© ISO/IEC 1999 - All rights reserved

Copyright International Organization for Standardization
Provided by IHS under license with ISO
No reproduction or networking permitted without license from IHS Not for Resale

Foreword

ISO (the International Organization for Standardization) and IEC (the International Electrotechnical Commission) form the specialized system for worldwide standardization. National bodies that are members of ISO or IEC participate in the development of International Standards through technical committees established by the respective organization to deal with particular fields of technical activity. ISO and IEC technical committees collaborate in fields of mutual interest. Other international organizations, governmental and non-governmental, in liaison with ISO and IEC, also take part in the work.

International Standards are drafted in accordance with the rules given in the ISO/IEC Directives, Part 3.

In the field of information technology, ISO and IEC have established a joint technical committee, ISO/IEC JTC 1. Draft International Standards adopted by the joint technical committee are circulated to national bodies for voting. Publication as an International Standard requires approval by at least 75 % of the national bodies casting a vote.

Attention is drawn to the possibility that some of the elements of this part of ISO/IEC 16500 may be the subject of patent rights. ISO and IEC shall not be held responsible for identifying any or all such patent rights.

International Standard ISO/IEC 16500-3 was prepared by DAVIC (Digital Audio-Visual Council) and was adopted, under the PAS procedure, by Joint Technical Committee ISO/IEC JTC 1, *Information technology*, in parallel with its approval by national bodies of ISO and IEC.

ISO/IEC 16500 consists of the following parts, under the general title *Information technology — Generic digital audio-visual systems*:

— *Part 1: System reference models and scenarios*

— *Part 2: System dynamics, scenarios and protocol requirements*

— *Part 3: Contours: Technology domain*

— *Part 4: Lower-layer protocols and physical interfaces*

— *Part 5: High and mid-layer protocols*

— *Part 6: Information representation*

— *Part 7: Basic security tools*

— *Part 8: Management architecture and protocols*

— *Part 9: Usage information protocols*

Annexes A and B form a normative part of this part of ISO/IEC 16500.

 © ISO/IEC 1999 - All rights reserved

Copyright International Organization for Standardization
Provided by IHS under license with ISO
No reproduction or networking permitted without license from IHS Not for Resale

Introduction

ISO/IEC 16500 defines the minimum tools and dynamic behavior required by digital audio-visual systems for end-to-end interoperability across countries, applications and services. To achieve this interoperability, it defines the technologies and information flows to be used within and between the major components of generic digital audio-visual systems. Interoperability between these components and between individual sub-systems is assured through specification of tools and specification of dynamic systems behavior at defined reference points. A reference point can comprise one or more logical (non-physical) information-transfer interfaces, and one or more physical signal-transfer interfaces. A logical interface is defined by a set of information flows and associated protocol stacks. A physical interface is an external interface and is fully defined by its physical and electrical characteristics. Accessible reference points are used to determine and demonstrate compliance of a digital audio-visual subsystem with this international standard.

A summary of each part follows.

ISO/IEC 16500-1 (DAVIC 1.3.1a Part 2) defines the normative digital audio-visual systems technical framework. It provides a vocabulary and a Systems Reference Model, which identifies specific functional blocks and information flows, interfaces and reference points.

ISO/IEC 16500-2 (DAVIC 1.3.1a Part 12) defines system dynamic behavior and physical scenarios. It details the locations of the control functional entities along with the normative protocols needed to support the systems behavior. It is structured as a set of protocol walk-throughs, or "*Application Notes"*, that rehearse both the steady state and dynamic operation of the system at relevant reference points using specified protocols. Detailed dynamics are given for the following scenarios: video on demand, switched video broadcast, interactive broadcast, and internet access.

ISO/IEC 16500-3 (DAVIC 1.3.1a Part 14) provides the normative definition of DAVIC Technology Contours. These are strict sets of Applications, Functionalities and Technologies which allow compliance and conformance criteria to be easily specified and assessed. This part of ISO/IEC 16500 contains the full details of two contours. These are the Enhanced Digital Broadcast (EDB) and Interactive Digital Broadcast (IDB). ISO/IEC 16500-3 specifies required technologies and is a mandatory compliance document for contour implementations.

ISO/IEC 16500-4 (DAVIC 1.3.1a Part 8) defines the toolbox of technologies used for lower layer protocols and physical interfaces. The tools specified are those required to digitize signals and information in the Core Network and in the Access Network. Each tool is applicable at one or more of the reference points specified within the Delivery System. In addition a detailed specification is provided of the physical interfaces between the Network Interface Unit and the Set Top Unit and of the physical interfaces used to connect Set Top Boxes to various peripheral devices (digital video recorder, PC, printer). The physical Delivery System mechanisms included are copper pairs, coaxial cable, fiber, HFC, MMDS, LMDS, satellite and terrestrial broadcasting.

ISO/IEC 16500-5 (DAVIC 1.3.1a Part 7) defines the technologies used for high and mid-layer protocols for ISO/IEC 16500 digital audio-visual systems. In particular, this part defines the specific protocol stacks and requirements on protocols at specific interfaces for the content, control and management information flows.

ISO/IEC 16500-6 (DAVIC 1.3.1a Part 9) defines what the user will eventually see and hear and with what quality. It specifies the way in which monomedia and multimedia information types are coded and exchanged. This includes the definition of a virtual machine and a set of APIs to support interoperable exchange of program code. Interoperability of applications is achieved, without specifying the internal design of a set top unit, by a normative Reference Decoder Model which defines specific memory and behavior constraints for content decoding. Separate profiles are defined for different sets of multimedia components.

ISO/IEC 16500-7 (DAVIC 1.3.1a Part 10) defines the interfaces and the security tools required for an ISO/IEC 16500 system implementing security profiles. These tools include security protocols which operate across one or both of the defined conditional access interfaces CA0 and CA1. The interface CA0 is to all security and conditional access functions, including the high speed descrambling functions. The interface CA1 is to a tamper resistant device used for low speed cryptographic processing. This cryptographic processing function is implemented in a smart card.

ISO/IEC 16500-8 (DAVIC 1.3.1a Part 6) specifies the information model used for managing ISO/IEC 16500 systems. In particular, this part defines the managed object classes and their associated characteristics for managing the access network and service-related data in the Delivery System. Where these definitions are taken from existing standards, full reference to the required standards is provided. Otherwise a full description is integrated in the text of this part. Usage-related information model is defined in ISO/IEC 16500-9.

© ISO/IEC 1999 - All rights reserved

--`,,```,,,,````-`-`,,`,,`,`,,`---

Copyright International Organization for Standardization
Provided by IHS under license with ISO
No reproduction or networking permitted without license from IHS Not for Resale

ISO/IEC 16500-9 (DAVIC 1.3.1a Part 11) specifies the interface requirements and defines the formats for the collection of usage data used for billing, and other business-related operations such as customer profile maintenance. It also specifies the protocols for the transfer of Usage Information into and out of the ISO/IEC 16500 digital audio-visual system. In summary, flows of audio, video and audio-visual works are monitored at defined usage data collection elements (e.g., servers, elements of the Delivery System, set-top boxes). Information concerning these flows is then collected, processed and passed to external systems such as billing or a rights administration society via a standardised usage data transfer interface.

Additional Information

ISO/IEC TR 16501 is an accompanying Technical Report. Further architectural and conformance information is provided in other non-normative parts of DAVIC 1.3.1a (1999). A summary of these documents is included here for information.

ISO/IEC TR 16501 (DAVIC 1.3.1a Part 1) provides a detailed listing of the functionalities required by users and providers of digital audio-visual applications and systems. It introduces the concept of a contour and defines the IDB (Interactive Digital Broadcast) and EDB (Enhanced Digital Broadcast) functionality requirements which are used to define the normative contour technology toolsets provided in ISO/IEC 16500-3.

DAVIC 1.3.1a Parts 3, 4 and 5 are DAVIC technical reports. They provide additional architectural and other information for the server, the delivery-system, and the Service Consumer systems respectively. Part 3 defines how to load an application, once created, onto a server and gives information and guidance on the protocols transmitted from the set-top user to the server, and those used to control the set-up and execution of a selected application. Part 4 provides an overview of Delivery Systems and describes instances of specific DAVIC networked service architectures. These include physical and wireless networks. Non-networked delivery (e.g., local storage physical media like discs, tapes and CD-ROMs) are not specified. Part 5 provides a Service Consumer systems architecture and a description of the DAVIC Set Top reference points defined elsewhere in the normative parts of the specification.

DAVIC 1.3.1a Part 13 is a DAVIC technical report, which provides guidelines on how to validate the systems, technology tools and protocols through conformance and / or interoperability testing.

 © ISO/IEC 1999 - All rights reserved

Copyright International Organization for Standardization
Provided by IHS under license with ISO
No reproduction or networking permitted without license from IHS Not for Resale

Information technology — Generic digital audio-visual systems — Part 3: Contours: Technology domain

1. Scope

This part of ISO/IEC 16500 on "Contours: Technology Domain" describes the system functions and DAVIC tools relevant to the Contours defined in ISO/IEC TR 165001. A goal of this part of ISO/IEC 16500 is to guide implementers to those parts of ISO/IEC 16500 which are relevant for the implementation of the systems in each Contour and to show the relation between the various tools. Another goal of this specification is to state which specific DAVIC tools have to be implemented to realize interoperable system components.

As the underlying trade-off between system component cost and service revenue may vary considerably, e.g., by geographical location and time, this trade-off is deemed to be outside of the scope of DAVIC and hence a more detailed "micro profiling" of the tool set needs to be agreed upon between the various parties involved with the realization of a system. An STB that is fully interoperable with, for example, Enhanced Broadcast Services within a certain geographical area, can be designed by implementing all defined DAVIC tools used by the Enhanced Broadcast Services in that area.

In order to assist the above mentioned micro-profiling activity the DAVIC tools relevant to a specific Contour have been structured in the following way. A collection of DAVIC tools (sub/clauses of ISO/IEC 16500) which together realize a complete system function (e.g., the reliable transmission of synchronized multimedia information) are grouped together. The group is identified as "system function". For each of these groups an overall informative description is given and a table listing in detail the included DAVIC tools. For the tools dependencies are indicated if applicable. The functional requirements derived from the User & Market Domain of a contour (see ISO/IEC TR 16501) are fully mapped to the above list of system functions.

2. Normative references

The following normative documents contain provisions which, through reference in this text, constitute provisions of this part of ISO/IEC 16500. For dated references, subsequent amendments to, or revisions of, any of these publications do not apply. However, parties to agreements based on this part of ISO/IEC 16500 are encouraged to investigate the possibility of applying the most recent editions of the standards indicated below. For undated references, the latest edition of the normative document referred to applies. Members of ISO and IEC maintain registers of currently valid International Standards. The Telecommunication Standardization Bureau (TSB) maintains a list of currently valid ITU-T Recommendations.

2.1 Identical Recommendations | International Standards

1. ITU-T Recommendation H.222.0 (1995) | ISO/IEC 13818–1: 1996, *Information technology—Generic coding of moving pictures and associated audio information: Systems* (Note: known as MPEG-2).
   - ISO/IEC 13818-1/Amendment 1: 1997, *Registration procedure for "copyright identifier"*.
   - ISO/IEC 13818-1/Amendment 2: 1997, *Registration procedure for "format identifier"*.
   - ISO/IEC 13818-1/Amendment 3: 1998, *Private data identifier.*
2. ITU-T Recommendation H.262 | ISO/IEC 13818–2:1996, *Information technology—Generic coding of moving pictures and associated audio information: Video* (Note: known as MPEG-2).
   - ISO/IEC 13818–2 /Amendment 1: *Registration procedure for "copyright identifier".*

2.2 Similar Recommendations | International Standards

The following Recommendations or International standards have equivalent technical content:

Copyright International Organization for Standardization
Provided by IHS under license with ISO
No reproduction or networking permitted without license from IHS Not for Resale

1. ITU-T (CCITT) Recommendation X.208 (1988), *Specification of Abstract Syntax Notation One (ASN.1)* | ISO/IEC 8824: 1990, *Information technology — Open Systems Interconnection — Specification of Abstract Syntax Notation One (ASN.1).*
2. ITU-T (CCITT) Recommendation X.209 (1988) *Specification of Basic Encoding rules for abstract syntax notation one (ASN.1)* | ISO/IEC 8825: 1990, *Information technology — Open Systems Interconnection — Specification of basic encoding rules for Abstract Syntax Notation One (ASN.1).*
3. ITU-T Recommendation X.218 (1995), *Reliable transfer: model and service definition* | ISO/IEC 9066-1: 1989, *Information Processing Systems — Text Communication — Reliable Transfer — Model and service definition for the Association Control Service Element.*
4. ITU-T (CCITT) Recommendation X.219 (1988) *Remote operations: Model, notation and service definition* | ISO/IEC 9072–1: 1989, *Information processing systems—Text communication—Remote Operations: Model, notation and service definition.*

2.3 Additional References

1394 Trade Association

1. *AV/DICS Specification for AV/C Digital Interface Command Set, September 13, 1996.*
   available at http://firewire.org/abouttech/specifications/1394_AVC.pdf

Apple Computer Inc.

1. *AIFF-C Audio Interchange File Format, version C, A revision allowing for Compression.*
   (Note: Required specification is provided in ISO/IEC 16500-6 Annex B. AIFF is also available at http://www.apple.com/quicktime/developers/ffda.html.)

ATM (Asynchronous Transfer Mode) Forum

1. af-phy-0017.000 - *UTOPIA: an ATM-PHY Interface Specification, Level 1, Version 2.01, March 21, 1994.* available at ftp://ftp.atmforum.com/pub/approved-specs/ af-phy-0017.000.pdf

ATSC (Advanced Television Systems Committee)

1. ATSC A/52: *Digital Audio Compression Standard (AC-3).*
   available at ftp://ftp.atsc.org/pub/Standards/A52

CENELEC (Comité Européen de Normalisation Electrotechnique)

1. CENELEC EN 50221, *Common Interface for Conditional Access and other Digital Video Decoder Applications.*

DVB (Digital Video Broadcasting)

1. DVB A007 *see* ETSI ETR 289
2. DVB Document A010 *see* CENELEC EN 50083-9
3. DVB Blue Book A017 *see* CENELEC EN 50221

ETSI (European Telecommunications Standards Institute)

1. ETR 162 (October 1995): *Digital broadcasting systems for television, sound and data services: Allocation of Service Information (SI) codes for Digital Broadcasting (DVB) systems.*
2. ETR 211*: Digital broadcasting systems for television, sound, and data services; Guidelines for the usage of Service Information (SI) in Digital Video Broadcasting (DVB) systems.*
3. ETR 289 (October 1996): *Support for use of Scrambling and Conditional Access (CA) within Digital Broadcasting Systems.*

 © ISO/IEC 1999 - All rights reserved

Copyright International Organization for Standardization
Provided by IHS under license with ISO
No reproduction or networking permitted without license from IHS Not for Resale

4. ETS 300 421 (December 1994): *Digital broadcasting systems for television, sound and data services; Framing structure, channel coding and modulation for 11/12 GHz satellite services.*
5. ETS 300 468 (January 1997): *Specification for Service Information (SI) in DVB Systems.*
   - Informative Annex C: *Conversion Between Time and Date Conventions*
6. ETS 300 472 (October 1996), *Digital broadcasting systems for television, sound, and data services; Specification for conveying ITU-R System B Teletext in Digital Video Broadcasting (DVB) bitstreams*.
7. ETS 300 743, *Digital Video Broadcasting (DVB), DVB subtitling*.
8. ETS 300 777-2, *Use of Digital Storage Media Command and Control (DSM-CC) for basic multimedia applications.*

IEC (International Electrotechnical Commission)

1. IEC 61883-1:1997, *Digital Interface for Consumer Electronics Audio/Video Equipment – General.*
2. IEC 61883-4:1997, *Digital Interface for Consumer Electronics Audio/Video Equipment – MPEG-2 TS Data Transmission.*

IEEE (Institute of Electrical and Electronics Engineers)

1. IEEE 1394-*1995 Standard for a High Performance Serial Bus, August 1996.*

Internet Society

1. RFC 768, J. Postel, *User Datagram Protocol (UDP),* 08/28/1980 (STD-6).
2. RFC 791, J. Postel, *Internet Protocol (IP Addressing),* 09/01/1981 (STD-5).
3. RFC 793, J. Postel, *Transmission Control Protocol (TCP),* 09/01/1981 (STD-7).
4. RFC 1662, W. Simpson, *PPP in HDLC-like Framing*, 07/21/1994 (STD-51).
5. RFC 1700, J. Reynolds, J. Postel, *Assigned Numbers,* 10/20/1994 (STD-2).

ISO (International Organization for Standardization*)*

1. ISO 639, *Codes for the representation of names of languages.*
2. ISO 3166, *Codes for the representation of names of countries.*
3. ISO 8859-1:1987, *Information technology - 8-bit single-byte coded graphic character sets – Part 1: Latin alphabet No. 1.*

ISO/IEC

1. ISO/IEC 7816-1:1987, *Identification cards - Integrated circuit(s) cards with contacts - Part 1: Physical characteristics.*
2. ISO/IEC 7816-2:1988, *Identification cards - Integrated circuit(s) cards with contacts - Part 2: Dimensions and location of the contacts.*
3. ISO/IEC 7816-3:1989, *Identification cards - Integrated circuit(s) cards with contacts - Part 3: Electronic signals and transmission protocols.*
4. ISO/IEC 7816-4:1995, *Identification cards - Integrated circuit(s) cards with contacts - Part 4: Interindustry commands for interchange.*
5. ISO/IEC 7816-5:1994, *Identification cards - Integrated circuit(s) cards with contacts - Part 5: Numbering system and registration procedure for application identifiers.*
6. ISO/IEC 7816-6:1996, *Identification cards - Integrated circuit(s) cards with contacts - Part 6: Interindustry data elements.*
7. ISO/IEC 10646-1, *Information technology - Universal Multiple-Octet Coded Character Set (UCS), Part 1: Architecture and Basic Multilingual Plane"* (also known as Unicode).
8. ISO/IEC 11172–2:1993, *Information technology—Coding of moving pictures and associated audio for digital storage media at up to about 1,5 Mbit/s—Part 2: Video* (Note: known as MPEG-1).
9. ISO/IEC 11172–3:1993, *Information technology—Coding of moving pictures and associated audio for digital storage media at up to about 1,5 Mbit/s—Part 3: Audio* (Note: known as MPEG-1).

Copyright International Organization for Standardization
Provided by IHS under license with ISO
No reproduction or networking permitted without license from IHS Not for Resale

10. ISO/IEC 13522–5:1997, *Information technology—Coding of Multimedia and Hypermedia Information—Part 5: Support for Base-Level Interactive Applications* (Note: known as MHEG-5).
11. ISO/IEC 13522-6, *Information technology - Coding of multimedia and hypermedia information (MHEG) - Part 6: Support for Enhanced Interactive Applications.*
12. ISO/IEC 13818–6, *Information technology—Generic coding of moving pictures and associated audio information—Part 6: Extensions for DSM-CC.*
13. ISO/IEC 13818–9:1996, *Information technology—Generic coding of moving pictures and associated audio information—Part 9: Extension for real-time interface for systems decoders.*
14. ISO/IEC 14750, *Information technology -- Open Distributed Processing - Interface Definition Language.*

ITU-R (International Telecommunications Union - Radiocommunication Sector)

1. ITU-R BT.601-4, *Encoding parameters of digital television for studios.*
2. ITU-R BT.709-1, *Basic parameter values for the HDTV standard for the studio and for international program exchange.*
3. ITU-R BT.1208, *Video coding for digital terrestrial television broadcasting.*

ITU-T (International Telecommunication Union - Telecommunication Standardization Sector)

1. ITU-T Recommendation E.164 / I.331 (1991) *Numbering plan for the ISDN era.*
2. ITU-T Recommendation I.361 (1995) *B-ISDN ATM layer specification.*
3. ITU-T recommendation V.22 (1988), *1200 bits per second duplex modem standardized for use on the general switched telephone network and on point-to-point 2-wire leased telephone-type circuits.*
4. ITU-T Recommendation V.22 bis (1988), *2400 bits per second duplex modem using the frequency division technique standardized for use on the general switched telephone network and on point-to-point 2-wire leased telephone-type circuits.*
5. ITU-T Recommendation V.32 (1993), *A family of 2-wire, duplex modems operating at data signaling rates of up to 9600 bit/s for use on the general switched telephone network and on leased telephone-type circuits.*
6. ITU-T Recommendation V.32 bis (1991), *A duplex modem operating at data signaling rates of up to 14400 bit/s for use on a general switched telephone network and on leased point-to-point 2-wire telephone-type circuits.*
7. ITU-T Recommendation V.34 (1994), *A modem operating at data signaling rates of up to 28800 bit/s for use on the general switched telephone network and on leased point-to-point 2-wire telephone-type circuits, version September 1994, published December 1994.*

OMG (Object Management Group)

1. *Common Object Request Broker: Architecture and Specification, version 2.1 August 1997.* (Note: known as OMG CORBA 2.1).

PCMCIA (Personal Computer Memory Card International Association)

1. Personal Computer Memory Card International Association, *PC Card Standard, Volume 2 - Electrical Specification*, February 1995.
2. Personal Computer Memory Card International Association, *PC Card Standard, Volume 3 - Physical Specification*, February 1995.
3. Personal Computer Memory Card International Association, *PC Card Standard, Volume 4 - Metaformat Specification*, February 1995.

Philips Semiconductor B.V.

1. Philips Semiconductor Specification, *The I^2C-bus and How to Use It (Including Specifications)*, 1995. Update, released April 1995, by Philips Semiconductor, Document number 9398-393-40011

 © ISO/IEC 1999 - All rights reserved

Copyright International Organization for Standardization
Provided by IHS under license with ISO
No reproduction or networking permitted without license from IHS
Not for Resale

SMPTE (Society of Motion Picture & Television Engineers)

1. SMPTE 274M *see* ANSI SMPTE 274M-1995
2. SMPTE S17.392 *see* ANSI SMPTE 296M-1997

W3C (WorldWide Web Consortium)

1. HTML 3.2, *HyperText Mark-up Language reference specification, 14-Jan-1997*

3. Definitions

For the purposes of this part of ISO/IEC 16500, the definitions given in other parts of ISO/IEC 16500 apply.

4. Acronyms and abbreviations

This clause defines the acronyms and abbreviations used in this part of ISO/IEC 16500. Annex B of ISO/IEC 16500-1 defines acronyms and abbreviations used within ISO/IEC 16500.

AAL	ATM Adaptation Layer
AC-3	ATSC A52 Audio
AFI	Authority and Format Identifier
AIFF	Audio Interchange File Format
ANSI	American National Standards Institute
API	Application Programming Interface
ASCII	American Standard Code for Information Exchange
ASN.1	Abstract Syntax Notation 1
ATM	Asynchronous Transfer Mode
ATSC	Advanced Television Systems Committee
AWG	American Wire Gauge
B-ISDN	Broadband Integrated Services Digital Network
BER	Bit Error Ratio
BNF	Backus-Naur Format
bslbf	bit string left bit first
BW	Bandwidth
CA	Conditional Access
CATV	Community Antenna TeleVision
CBD	Connection Block Descriptor
CI	Content Item
CIE	Content Item Element
CLUT	Color LookUp Table
CMB	CRC Message Block
CMIP	Common Management Information Protocol
CMISE	Common Management Information Service Element
CMSL	Content Metadata Specification Language
CORBA	Common Object Request Broker Architecture
CPS	Content Provider System
CRC	Cyclic Redundancy Check
CW	Control Word
DFP	Downstream Frame Period
DIS	Draft International Standard
DLL	Data Link Layer
DS	Downstream
DSM-CC	Digital Storage Media - Command and Control
DSM-CC U-N	Digital Storage Media - Command and Control User-to-Network
DSM-CC U-U	Digital Storage Media - Command and Control User-to-User
DTS	Decoding Time Stamp
DVB	Digital Video Broadcasting
DVB-SI	DVB - Service Information
ECM	Entitlement Control Message
EMM	Entitlement Management Message

Copyright International Organization for Standardization
Provided by IHS under license with ISO
No reproduction or networking permitted without license from IHS Not for Resale

EPG	Electronic Program Guide
ESC	End Service Consumer
ESCS	End-Service Consumer System
ESF	Extended SuperFrame
ESP	End Service Provider
ESPS	End-Service Provider System
ETR	European Telecommunications Recommendation
ETS	European Telecommunications Standard
ETSI	European Telecommunications Standards Institute
FEC	Forward Error Correction
FIFO	First In First Out
fpvsbf	floating point value sign bit first
GIOP	Generic Inter-ORB Protocol
GSM	Global System for Mobile communications
HDTV	High Definition TeleVision
HFC	Hybrid Fiber Coax
HRM	High Reliability Marker
HTML	HyperText Markup Language
ID	Identification
IDL	Interface Definition Language
IEC	International Electrotechnical Commission
IETF	Internet Engineering Task Force
IIOP	Internet Inter-ORB Protocol
IP	Internet Protocol
IPR	Intellectual Property Rights
ISDN	Integrated Services Digital Network
ISO	International Organization for Standardization
ITU	International Telecommunications Union
ITU-T	International Telecommunication Union - Telecommunications sector
IWU	InterWorking Unit Functionality
LAPB	Link Access Procedure Balanced
LAPD	Link Access Procedure D-channel
LFSR	Linear Feedback Shift Register
LSB	Least Significant Bit
MAC	Medium Access control
MAC	Media Access Control
Mbps	Megabits per second
MHEG	Multimedia and Hypermedia information coding Experts Group
MIB	Management Information Base
MPEG	Moving Pictures Experts Group
MPEG-TS	MPEG-2 Transport Stream
MSB	Most Significant Bit
MUX	Multiplex
N-ISDN	Narrowband Integrated Services Digital Network
NIU	Network Interface Unit
NMS	Network Management System
NPT	Normal Play Time
NRZ	Non-Return-to-Zero
NSAP	Network Service Access Point
NTSC	National Television Systems Committee
OAM	Operation and Maintenance
OMG	Object Management Group
OMG-CDR	Object Management Group - Common Data Representation
OS	Operating System
OSI	Open Systems Interconnection (Reference Model)
PC	Personal Computer
PCR	Program Clock Reference
PDU	Protocol Data Unit
PDU	Packet Data Unit

 © ISO/IEC 1999 - All rights reserved

Copyright International Organization for Standardization
Provided by IHS under license with ISO
No reproduction or networking permitted without license from IHS Not for Resale

PES	Packetized Elementary Stream
PHY	Physical Layer Interface
PID	Packet Identifier
PLMN	Public Land Mobile Network
PM	Phase Modulation
PMD	Physical Medium Dependent
PMT	Program Map Table
PN	Program Number (MPEG-2)
POTS	Plain Old Telephone System
PPM	Pulses Per Million
PRBS	Pseudo Random Binary Sequence
PSI	Program Specific Information (MPEG-2)
PSK	Phase Shift Keying
PSTN	Public Switched Telephone Network
PTS	Presentation Time Stamp
PVC	Permanent Virtual Connection
QAM	Quadrature Amplitude Modulation
QoS	Quality of Service
QPSK	Quaternary Phase Shift Keying
RDM	Reference Decoder Model
RF	Radio Frequency
RGB	Red Green Blue
RL	Return Loss
ROSE	Remote Operation Service Element
RPC	Remote Procedure Call
RS	Reed-Solomon
RTE	RunTime Engine
SAAL	Signaling ATM Adaptation Layer
SAR	Segmentation and Re-assembly
SCS	Service Consumer System
SDL	Syntax Description Language
SDU	Service Data Unit
SFP	SuperFrame Period
SFSC	SuperFrame Synchronization Control
SGML	Standard Generalized Markup Language
SI	Service Information
SL-ESF	Signaling Link - Extended Superframe
SMATV	Satellite Master Antenna Television
SNMP	Simple Network Management Protocol
SONET	Synchronous Optical Network
SPS	Service Provider System
SPV	Service Provider
SRC	Service Related Control
SSCOP	Service Specific Connection Oriented Protocol
STS	Satellite Transmission System
STU	Set Top Unit
T-STD	Transport System Target Decoder
TBD	To be defined
TC	Transmission Convergence
TCP	Transmission Control Protocol
TDM	Time Division Multiplex
TDMA	Time Division Multiple Access
TE	Terminal Equipment
TS	Transport Stream
TV	Television
UD	User Data
UDP	User Datagram Protocol
uimsbf	unsigned integer most significant bit first
UNI	User Network Interface

Copyright International Organization for Standardization
Provided by IHS under license with ISO
No reproduction or networking permitted without license from IHS Not for Resale

UPI	User Premises Interface
US	Upstream
UTC	Universal Coordinated Time
UTP	Unshielded Twisted Pair
VASP	Value Added Service Provider
VCI	Virtual Channel Identifier
VCR	Video Cassette Recorder
VM	Virtual Machine
VP	Virtual Path
VPCI	Virtual Path Connection Identifier
VPI	Virtual Path Identifier

5. Conventions

The style of this part of ISO/IEC 16500 follows the general guidelines of the *Guide for ITU-T and ISO/IEC JTC 1 cooperation. Appendix II: Rules for presentation of ITU-T | ISO/IEC Common Text (March 1993).*

6. Concepts — Contours, Systems and Interoperability

This clause describes the underlining concepts of Contours within this this part of ISO/IEC 16500.

Figure 6-1 illustrates the definition of “Technology Domain” in the concept of “DAVIC Contours”. The detailed definition of “DAVIC Contours” is provided in ISO/IEC TR 16501.

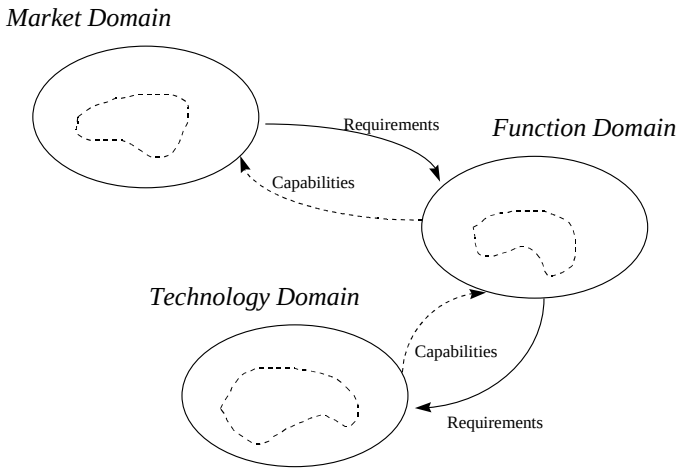

Figure 6-1 — Contour Definition and Technology Domain

The systems based on DAVIC specifications will be built upon a set of “technical tools” specified in the DAVIC contour, plus some of additional tools which may or may not specified by DAVIC. These relationships are illustrated in Figure 6-2.

 © ISO/IEC 1999 - All rights reserved

Copyright International Organization for Standardization
Provided by IHS under license with ISO
No reproduction or networking permitted without license from IHS
Not for Resale

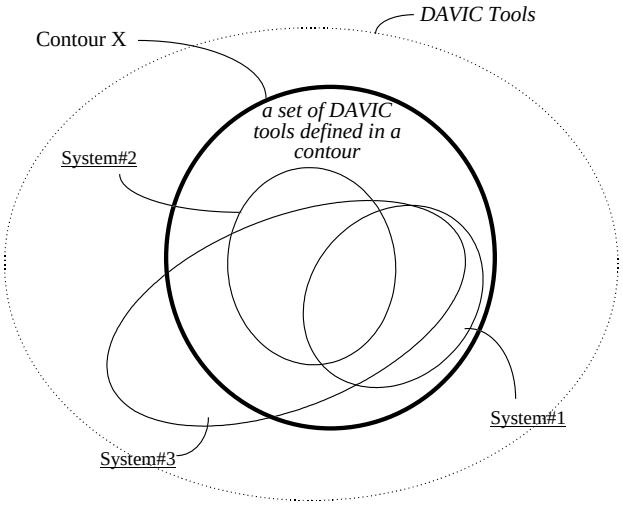

Figure 6-2 — Concept of a Contour and Systems

The goal of the contour concept is to achieve the maximum interoperability between systems implemented based on a specific contour definition and, at the same time, between systems built upon different defined contours. The latter is important for easy migration (or elaboration) of the systems from one contour to another.

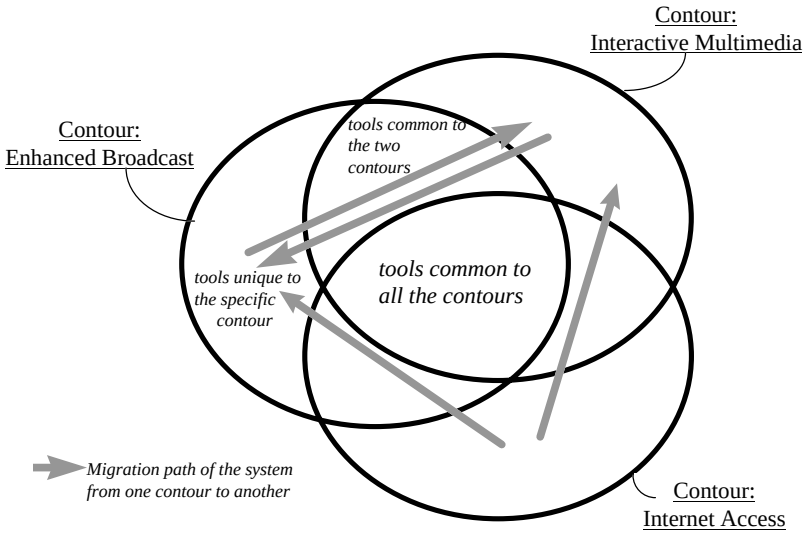

Figure 6-3 — Interoperability between Contours

"Interoperability", "Conformance" and "Compliance" and in the context of technical description of Contours are defined as:

Interoperability

is the ability between two or more implementations to interact with each other as required by the contour specification. Interoperability can only be determined between sub-systems which are part of an end-to-end system that encompasses the entire contour. Sub-systems are separated by DAVIC reference points. Interoperability can only be tested between sub-systems connected to the same reference point or to different reference points connected via a transparent link for the protocol peers be tested.

Copyright International Organization for Standardization
Provided by IHS under license with ISO
No reproduction or networking permitted without license from IHS Not for Resale

Conformance

means providing system functions, as defined in a particular contour, used by the services in a system for which conformance is declared. These functions have to be implemented according to the tool definition as described in the contour's list of tools. The set of system functions used needs to be agreed upon by the parties involved with the realization of the system. Conformance can only be declared to a Contour listing those system functions which are provided in the system.

Compliance

means providing all of the system functions specified in a Contour according to the mapping to DAVIC technologies specified in the corresponding annex of this part of ISO/IEC 16500. DAVIC systems compliant to a particular Contour are characterized as follows:

- The system must be built from the set of tools defined in ISO/IEC 16500 and referred in the annex of this part of ISO/IEC 16500 for the particular Contour
- The system must illustrate DAVIC conformance at reference points defined in ISO/IEC 16500-1 and referred in the annex of this part of ISO/IEC 16500 for the particular Contour
- The system must perform functional requirements defined in ISO/IEC TR 16501 and referred in the annex of this part of ISO/IEC 16500 Part 14 for the particular Contour.

Appropriate reference points must be accessible to allow effective interoperability testing throughout the system.

 © ISO/IEC 1999 - All rights reserved

--`,,```,,,,````-`-`,,`,,`,`,,`---

Copyright International Organization for Standardization
Provided by IHS under license with ISO
No reproduction or networking permitted without license from IHS Not for Resale

Annex A
(normative)
Enhanced Digital Broadcast (EDB) Technology Domain

A.1 Scope

This Appendix specifies the Technology Domain of the Enhanced Digital Broadcast (EDB) contour.

Figure A-1 shows a system configuration implementing the EDB contour.

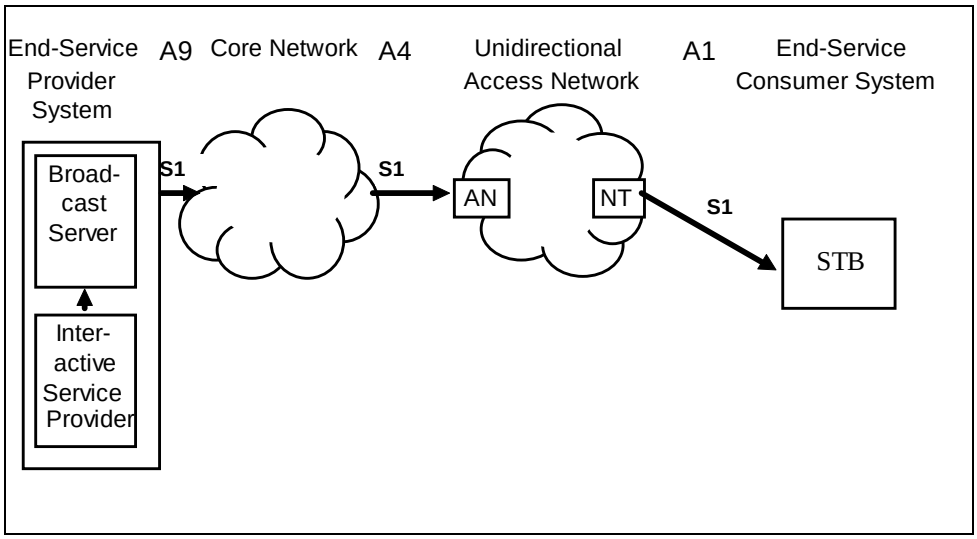

Figure A-1 — Configuration of Enhanced Digital Broadcast System

A.2 Overview of system functions

Table A2-1, Table A2-2, Table A2-3, and Table A2-4 list the system functions relevant to the Enhanced Digital Broadcast Contour. As described above, system functions are a collection of DAVIC clauses which together realize a complete system function. For each of the system functions it is indicated which DAVIC Clause implements the function, the Reference Point to which the function applies, the system location where the function is implemented and other system functions which shall be implemented if the function is implemented. An acronym is assigned to each function for further reference. This acronym is used in subclause A.4 of this Annex where detailed lists of DAVIC tools belonging to each function are given.

Note that these system functions have been defined on the basis of DAVIC 1.2 tools. Revisions of this technology contour may include new functions when suitable tools are identified according to the DAVIC Rules for technical procedure.

© ISO/IEC 1999 - All rights reserved

--`,,```,,,,````-`-`,,`,,`,`,,`---

Copyright International Organization for Standardization
Provided by IHS under license with ISO
No reproduction or networking permitted without license from IHS
Not for Resale

Table A2-1 Overview of System Functions for Enhanced Digital Broadcast - High and Mid layer protocols

Acronym	Description	Standard Referenced	DAVIC Clause	Relevant Reference Point	System Location	Requires Function
P7URTS	High and Mid layer Protocols for unidirectional Real-Time Streams - MPEG-2 Transport Stream for Audio, Video and data Transmission	ISO/IEC 13818-1	Part 7, Sec 6	A9,A1	SPS, DS, SCS	P8PBUCX or P8PBUSL or P8PBUMD or P8PBULM
P7URTSE	Extension to P7URTS for Stream Events etc.	ISO/IEC 13818-1	Part 7, Sec 7	A9, A1	SPS, DS,SCS	P7URTS
P7UNRT	Mid- and High-layer protocols for unidirectional Non Real-Time Transmission	ISO/IEC 13818-6 ISO/IEC 13818-1	Part 7 Sec 6,7		SPS, DS,SCS	P8PBUCX or P8PBUSL or P8PBUMD or P8PBULM
P7CNLD	High and Mid Layer Protocols for Content Loading	ISO/IEC 13818-6	Part 7 Sec 7	A10	SPS,DS	
P7A0	Protocols for interfacing a Network-Interface-Unit to a Set-Top-Unit	ISO/IEC 13818-1 ITU-T I.363.5 (AAL5)	Part 7 Sec 12	A0	SCS	P8A0EXT or P8A0INT
P7MPMMDP	Protocols for MPEG based services on the STU Multimedia Dataport	ISO/IEC 13818-1 IEC 61883	Part 7 Sec 13	A20	SCS	P8MMDP

 © ISO/IEC 1999 - All rights reserved

Copyright International Organization for Standardization
Provided by IHS under license with ISO
No reproduction or networking permitted without license from IHS Not for Resale

Table A2-2 Overview of System Functions for Enhanced Digital Broadcast - Lower Layer Protocols and Physical Interfaces

Acronym	Description	Standard Referenced	DAVIC Clause	Relevant Reference Point	System Location	Requires Function
P8PBUCX	Passband Unidirectional PHY on coax		Part 8 Sec 7.7	A9, A1	DS	
P8PBUSL	Passband Unidirectional PHY on Satellite	ETS 300 421	Part 8 Sec 7.9	A9, A1	DS	
P8PBUMD	Passband Unidirectional PHY on MMDS		Part 8 Sec 7.10	A9, A1	DS	
P8PBULM	Passband Unidirectional PHY on LMDS		Part 8 Sec 7.11	A9, A1	DS	
P8A0INT	Interface of Set-Top-Unit to Internal Network-Interface-Unit	UTOPIA Level 1 I^2C	Part 8 Section 8	A0	SCS	
P8A0EXT	Interface of Set-Top-Unit to External Network-Interface-Unit	IEEE 1394-1995	Part 8 Section 8	A0	SCS	
P8MMDP	STU Multimedia Dataport	IEEE 1394-1995	Part 8 Sec 9.2	A20	SCS	

Table A2-3 Overview of System Functions for Enhanced Digital Broadcast - Information Representation

Acronym	Description	Standard Referenced	DAVIC Clause	Relevant Reference Point	System Location	Requires Function
P9VIDMR	Information Representation for Real-Time compressed Video streams with a resolution up to ITU-R 601	ISO/IEC 13818-2	Part 9 Sec 6, 7, 8	A9,A1	SPS,SCS	P7URTS

--`,,```,,,,````-`-`,,`,,`,`,,`---

Copyright International Organization for Standardization
Provided by IHS under license with ISO
No reproduction or networking permitted without license from IHS Not for Resale

P9VIDHR	Information Representation for Real-Time compressed Video streams with a resolution beyond ITU-R 601	ISO/IEC 13818-2	Part 9 Sec 6, 7, 8	A9,A1	SPS,SCS	P7URTS
P9VIDMS	Information Representation for Stored compressed Video streams with a resolution up to ITU-R 601	ISO/IEC 13818-2	Part 9 Sec 6, 7, 8	A9,A1	SPS,SCS	P9RDM and P7UNRT
P9VIDHS	Information Representation for Stored compressed Video streams with a resolution beyond ITU-R 601	ISO/IEC 13818-2	Part 9 Sec 6, 7, 8	A9,A1	SPS,SCS	P9RDM and P7UNRT
P9AUDMP1R	Information Representation for Real-Time compressed Audio streams using MPEG-1	ISO/IEC 11172-3	Part 9 Sec 6, 7, 8	A9,A1	SPS,SCS	P7URTS
P9AUDATR	Information Representation for Real-Time compressed Audio streams using ATSC A/52 Audio	ATSC A/52	Part 9 Sec 6, 7, 8	A9,A1	SPS,SCS	P7URTS
P9AUDMP1S	Information Representation for stored compressed Audio streams using MPEG-1	ISO/IEC 11172-3	Part 9 Sec 6, 7, 8	A9,A1	SPS,SCS	P9RDM and P7UNRT

 © ISO/IEC 1999 - All rights reserved

Copyright International Organization for Standardization
Provided by IHS under license with ISO
No reproduction or networking permitted without license from IHS Not for Resale

P9AUDATS	Information Representation for stored compressed Audio streams using ATSC A/52 Audio	ATSC A/52	Part 9 Sec 6, 7, 8	A9,A1	SPS,SCS	P9RDM and P7UNRT
P9CGR	Information Representation for Compressed Graphics Real-Time streams	ETS 300 743	Part 9 Sec 6,7,8	A9,A1	SPS,SCS	P7URTS
P9CGS	Information Representation for Compressed Graphics Stored streams	ETS 300 743	Part 9 Sec 6,7,8	A9,A1	SPS,SCS	P9RDM and P7UNRT
P9CGB	Information Representation for Graphics Bitmaps	ETS 300 743	Part 9 Sec 6,7,8	A9,A1	SPS,SCS	P9RDM and P7UNRT
P9SPICR	Information Representation for real-time streams of Still Pictures	ISO/IEC 13818-2	Part 9 Sec 6, 7, 8	A9,A1	SPS,SCS	P7URTS
P9SPICS	Information Representation for stored streams of Still Pictures	ISO/IEC 13818-2	Part 9 Sec 6, 7, 8	A9,A1	SPS,SCS	P9RDM and P7UNRT
P9SPB	Information Representation for Still Picture bitmaps	ISO/IEC 13818-2	Part 9 Sec 6, 7,8	A9,A1	SPS,SCS	P9RDM and P7UNRT
P9CCR	Information representation for Real-Time streams of Compressed Character Data		Part 9 Sec 6, 7, 8	A9, A1	SPS,SCS	P7URTS
P9CCS	Information representation for Stored streams of Compressed Character Data		Part 9 Sec 6, 7, 8	A9, A1	SPS,SCS	P9RDM and P7UNRT

Copyright International Organization for Standardization
Provided by IHS under license with ISO
No reproduction or networking permitted without license from IHS Not for Resale

P9LNAD	Information Representation for stored Linear Audio streams	AIFF-C	Part 9 Sec 6, 7, 8, A, C	A9,A1	SPS,SCS	P9RDM and P7UNRT
P9TXT	Information Representation for Text and Characters	ISO 10646-1 HTML 3.2	Part 9 Sec 6, 7, 8	A9,A1	SPS,SCS	P9RDM and P7UNRT
P9SI	Information Representation for Service Information	ETS 300 468	Part 9 Sec 6	A9,A1	SPS,SCS	P7UNRT
P9CNLD	Information Representation for Content Loading		Part 9 Sec 11	A10	SPS	P7CNLD
P9DAPP	Information Representation for Declarative Applications	ISO/IEC 13522-5	Part 5, Part 9 Sec 9, 10	A1, A9	SPS, SCSS	P9RDM and P7UNRT
P9PAPP	Information Representation for Procedural Applications	ISO/IEC 13522-6 JAVA VM	Part 9 Sec 9, 10	A1, A9	SPS, SCSS	P9DAPP
P9RDM	Reference Decoder Model		Part 9 Section 10	A1, A9	SPS, SCSS	

Table A2-4 Overview of System Functions for Enhanced Digital Broadcast - Security

Acronym	Description	Standard Referenced	DAVIC Clause	Relevant Reference Point	System Location	Requires Function
P10CA0	Security Tools: Interface for Conditional Access based on PCCard Form Factor	CENELEC EN 50221	Part10 Sec 9, 10, 9, 13	CA0/CA1	SPS,DS, SPS	
P10CA1	Security Tools: Interface for Conditional Access based on Smart Card	ISO/IEC 7816-1, 2, 3, 4, 5, 6	Part10 Sec 10, 9, 12	CA0/CA1	SPS,DS, SPS	
P10DL	Security Tools: Secure Download	ISO/IEC 13818-6	Part 10 Sec 7	A1, A9	DC, SC, SPS	P7UNRT

Note 1: Some detailed aspects of some tools identified are further qualified to be optional in the following tables. Implementations may elect not to implement these aspects.

 © ISO/IEC 1999 - All rights reserved

Copyright International Organization for Standardization
Provided by IHS under license with ISO
No reproduction or networking permitted without license from IHS Not for Resale

A.3 Cross Reference between System Requirements and System Functions

Systems Requirements which may be supported in future revisions of ISO/IEC 16500, if appropriate tools are available, are indicated by TBD (To Be Determined). They are included here to indicate perceived gaps in technology relative to the Contours defined in ISO/IEC TR 16501.

Table A3-1 — Cross Reference between System Requirement and System Functions

Ref.	Description	Technology Domain
	CONTENT LOADING FUNCTIONS	
1.01	The system must support the delivery of content material from the Content Provider to the Service Provider via physical media.	TBD
1.02	The system must support the delivery of content material from the Content Provider to Service Provider via an electronic link.	TBD
1.05	The system must support the delivery of content from the Content Provider to Service Provider as separate, distinguishable content item elements.	P9CNLD
1.06	Content item elements on the Service Provider's system may be replaced with new versions.	P7CNLD
1.08	Content item elements from a variety of content items may be packaged together and carried as one package from the Content Provider to the Service Provider.	P9CNLD
1.15	The Service Provider must be able to authenticate the identity of the Content Provider.	P10AUT
1.16	Transfer of material between a Content Provider and Service Provider should have the possibility of being secure, using encryption or other techniques.	TBD
1.20	The system must support the delivery of content material in real-time from the Content Provider, through the Service Provider to the End User.	TBD
1.22	The flow of content material in real-time may be initiated by the Service Provider or User.	P7CNLD
1.23	It must be possible for a Content Provider to automatically load content item elements into a Service Provider's system.	P7CNLD
1.26	It must be possible for Content Management Data stored on the Service Provider's system to grant or deny User access to content material.	P7CNLD
1.27	It must be possible for Content Management Data stored on the Service Provider's system to employ embargo dates/times to deny and grant access to content material.	P9CNLD
1.28	It must be possible for Content Management Data stored on the Service Provider's system to cause the content to be automatically deleted at a prescribed date and time.	P9CNLD
1.29	It must be possible for embargo and deletion dates/times to be set differently in different areas.	P9CNLD
1.30	It must be possible for Content Management Data to include copyright information.	P9CNLD
1.31	It must be possible for Content Management Data to include the rights to alter the material.	P9CNLD
1.32	It must be possible for Content Management Data to include the rights to distribute the material.	P9CNLD
1.33	It must be possible for Content Management Data to include an **extensible** set of features (e.g., price, number of plays and ownership).	P9CNLD
1.34	One or more content item elements must be able to carry Navigation Data, enabling End Users to locate content.	P9CNLD
1.35	It must be possible for Content Navigation Data to carry a content label for unique identification of the content item.	P9CNLD

Copyright International Organization for Standardization
Provided by IHS under license with ISO
No reproduction or networking permitted without license from IHS Not for Resale

Ref.	Description	Technology Domain
1.36	It must be possible for Content Navigation Data to include an extensible set of features (e.g., title, rating, synopsis, producer, length, price, "attractors" like stars etc., presentation format and Content Provider name).	P9CNLD
1.37	The STU must be able to decode at least MPEG-2 TS MP @ ML	P9VIDMR
1.38	Display normal and wide screen material on either normal or wide screen displays	P9VIDMR
1.39	The STU must be able to decode and display 4:3 and 16:9 formats	P9VIDMR
1.41	The Content Management System must retain all appropriate information for respecting Intellectual Property Rights..	P9CNLD
	BIT TRANSPORT FUNCTIONS	
2.01	The system should provide connection from the Service Provider to the STU at a specified bit-rate.	P7URTS
2.03	The system should enable transmission of bit-stream from the Service Provider to a single STU destination (Unicasting).	P7URTS AND (P10CA0 OR P10CA1)
2.04	The system should enable simultaneous transmission of bit-stream from Service Provider to selected multiple STU destinations (Multicasting).	P7URTS AND (P10CA0 OR P10CA1)
2.05	The system should enable simultaneous transmission of bit-stream from Service Provider to all STU destinations (Broadcasting).	P7URTS
2.07	The system should provide a broadcast control channel from the Service Provider to all STUs.	P7UNRT
2.10	The system should enable the transportation of application program code from the Service Provider to the STU.	P7UNRT
2.11	The system should enable the transportation of programme content (audio, video, text, graphics etc.) and data from the Service Provider to the STU.	P7URTS OR PUNRT
2.12	The system should enable the transportation of programme service information (Station Identification, descriptive material about programme content etc.)	P7UNRT
2.13	The transport link should provide error -resilience.	P7UNRT
2.20	Support the transport of multi-lingual audio	P7URTS OR P7UNRT
	NETWORK MANAGEMENT FUNCTIONS	
3.01	The system should facilitate the Operation, Administration, Maintenance & Provisioning functions required by Network Providers.	P10CA0 or P10CA1
3.02	The system should signal faults and failures to Service Providers and Network Providers, and facilitate rapid recovery under such failure conditions.	TBD
	SESSION FUNCTIONS	
	General	
4.01	The Service Provider should be able to download information to allow the STU to locate material carried on a variety of media (including satellite, terrestrial and cable delivery).	P9SI
4.04	Each application should be able to establish a communications session.	P9DAPP
4.08	The application should be able to terminate a session in an orderly fashion.	P9DAPP
4.09	The application should be able to reserve a session in advance.	P9DAPP
4.11	The application should be able to provide information to the user about the reserved program timeslot, and to provide control and warning signals when required.	P9DAPP

 © ISO/IEC 1999 - All rights reserved

Copyright International Organization for Standardization
Provided by IHS under license with ISO
No reproduction or networking permitted without license from IHS Not for Resale

Ref.	Description	Technology Domain
4.12	The application should be able to provide a range of choices of audio, video, textual and graphical quality and definition.	P9DAPP and (P9VIDMR or PDVIDHR or P9VIDMS or P9VIDHS or P9AUDMP1R or P9AUDATR or P9AUDMP1S or P9AUDATS or P9CGR or P9CGS or P9CGB or P9SPICR OR P9SPICS or P9SPB or P9LNAD or P9TXT or PGCCR or P9CCS)
4.13	An application should be able to dynamically change the quality of audio, video, text and graphics of an existing session during operation.	System Functions listed for 4.12
4.14	A user should be able to request an application to change the quality of audio, video, text and graphics of an existing session during operation.	System Functions listed for 4.12
	Session types	
4.16	A user should be able to suspend an active session.	P9DAPP
4.17	A user should be able to resume a suspended session.	P9DAPP
4.18	A user should be able to start another session during suspension of a current session (e.g.. to use a navigation facility to access different programme content or to run other applications).	P9DAPP
4.19	A user should be able to cancel a suspended session.	P9DAPP
4.20	It should be possible for a suspended session to be cancelled automatically after a timeout.	P9DAPP
	Content aspects of sessions	

--`,,```,,,,````-`-`,,`,,`,`,,`---
Copyright International Organization for Standardization
Provided by IHS under license with ISO
No reproduction or networking permitted without license from IHS Not for Resale

Ref.	Description	Technology Domain
4.24	The system should be able to encode content material.	P9VIDMR OR P9VIDMR OR PDVIDHR OR P9VIDMS OR P9VIDHS OR P9AUDMP1R OR P9AUDATR OR P9AUDMP1S OR P9AUDATS OR P9CGR OR P9CGSOR P9CGB OR P9SPICR OR P9SPICS OR P9SPB OR P9LNAD OR P9TXT or PGCCR or P9CCS
4.25	The STU should be able to decode content material.	System functions listed per 4.24
4.28	The system should be able to transfer audio-visual clip material.	P9VIDMS OR P9VIDHS OR P9AUDMP1S OR P9AUDATS
4.29	The system should be able to transfer still picture material.	P9SPICR OR P9SPICS OR P9SPB
4.30	The system should be able to transfer a text description of audio-visual material.	P9TXT OR P9SI
4.32	The system should be able to transfer multi-channel audio material	P9AUDATR OR P9AUDATS
4.33	The system should be able to transfer text material	P9TXT or PGCCR or P9CCS
4.34	The system should be able to transfer motion audio-video material	((P9VIDMR OR PDVIDHR) AND (P9AUDMP1R OR P9AUDATR)) OR ((P9VIDMS OR P9VIDHS) AND (P9AUDMP1S OR P9AUDATS))
4.35	The system should be able to transfer graphics material	P9CGR OR P9CGS OR P9CGB

 © ISO/IEC 1999 - All rights reserved

Copyright International Organization for Standardization
Provided by IHS under license with ISO
No reproduction or networking permitted without license from IHS Not for Resale

Ref.	Description	Technology Domain
4.36	The system should be able to transfer monophonic audio material	P9AUDMP1S OR P9AUMP1S
4.37	The system should be able to transfer stereophonic audio material	P9AUDMP1S OR P9AUMP1S
4.38	Provide data carousel functionality	P7UNRT
	ACCESS CONTROL FUNCTIONS	
	General	
5.03	The system should provide effective, yet unobtrusive means to prevent unauthorised access to the network.	P10CA0 OR P10CA1 OR P10AUT
5.04	The system should provide means to prevent unauthorised access to Service Provider by STUs.	P10AUT
5.05	The system should provide means to prevent unauthorised access to the STU.	P9DAPP
5.06	The system should provide means to prevent unauthorised access to Service Provider by Content Providers.	P9DAPP
5.07	The system should provide means to limit access to certain content and applications on the Server.	P10CA0 OR P10CA1
5.09	The system should provide means to protect against viruses etc.	P9DAPP
5.10	A Service Provider should be able to dynamically authorise or deny access to services according to contract with customer.	P10CA0 OR P10CA1
5.11	A system needs to provide means to authenticate the identity of Service Provider.	P10AUT
5.12	A Service Provider needs to be able to authenticate the identity of the user.	P10AUT
5.13	A Service Provider needs to be able to utilise a user's identity to select a particular User Profile.	P9DAPP
5.14	The system should provide the means by which a customer account may apply to several users, each to be separately identified with a different service level (for example parents / children).	P10CA0 OR P10CA1
5.15	Each customer account may apply to several users, each to be separately identified with a different User Profile (covering preferences, shoe sizes etc.).	P9DAPP
5.18	The system should support and control conditional access services.	P10CA0 OR P10CA1
5.19	The account owner should have the ability to control access to material by subsidiary users of the same account.	P10CA0 OR P10CA1
5.20	users should be able to control access to certain applications and content.	P10CA0 OR P10CA1
5.21	The system should provide means for the Service Provider to control access services according to credit status and payment history (or customer characteristics).	P10CA0 OR P10CA1
5.23	The system should enable access control limits to be dynamic (for example peak/off peak hours)	P9DAPP
5.24	The system should facilitate the non-repudiation of downloaded data.	P9DAPP
	IPR aspects	
5.25	The system should provide means to control access to copyright material (applications, programme content etc.).	P10CA0 OR P10CA1
5.26	The system should provide means to generate records of usage of copyright material to facilitate payment.	P10CA0 OR P10CA1
5.28	The system should include mechanisms to prohibit copies of material being made if not authorised.	P7URTS

© ISO/IEC 1999 - All rights reserved

Copyright International Organization for Standardization
Provided by IHS under license with ISO
No reproduction or networking permitted without license from IHS
Not for Resale

Ref.	Description	Technology Domain
5.29	The Service Provider should be able to control access to material in given geographical areas (e.g., local football match not available in real time to area from which spectators will be drawn).	P10CA0 OR P10CA1
	Authorisation	
5.30	The system should provide means to enable the user to authorise the supply of Service Provider-delivered services (applications, VoD etc.).	P9DAPP
5.31	The system should provide means to enable a user to authorise the supply of goods and services.	P9DAPP
5.32	The system should provide means to enable a user to authorise payment of goods and services.	P9DAPP
5.33	The system should provide means to enable a user to arrange for delivery of goods and services (not necessarily to user's address).	P9DAPP
5.34	The system should provide a secure validation system for financial transactions (such as the transmission, reception, validation and transfer to third-parties of electronic signatures).	P10AUT
5.35	Provide means for user to acquire rights to access-limited content	P10CA0 OR P10CA1
5.36	The system should allow secure access to customer databases at service provider premises	TBD
5.37	The system should allow secure access to user profile data	P10CA0 OR P10CA1
5.38	The system should provide means to prevent unwanted material from being received by the user.	P10CA0 OR P10CA1
	NAVIGATION FUNCTIONS	
	General	
6.01	Set-top units should offer a start-up function to allow user to make initial choice of service or application.	P9DAPP
6.02	Set-top units should offer other menus as a result of subsequent user command or system response.	P9DAPP
6.03	The system should offer equally easy access to the full range of available Service Providers.	P9DAPP
6.04	The system should permit a Service Provider to present a range of services and products to the user.	P9DAPP
6.05	The system should permit the user to create and maintain a list of favourite places (Services Providers and Services frequently used).	P9DAPP OR P9PAPP
6.06	The user should be able to find/choose/select an application using a navigation system.	P9DAPP OR P9PAPP
6.07	The user should be able to find/choose/select a content item using a navigation system.	P9DAPP OR P9PAPP
6.08	The user should be able to find/choose/select a product/service using a navigation system.	P9DAPP OR P9PAPP
6.09	Navigation systems should permit Service Providers to identify the commercial conditions (cost etc.) of applications delivery to users.	P9DAPP
6.10	Navigation systems should permit Service Providers to identify the commercial conditions (cost etc.) of content delivery to users.	P9DAPP
6.11	Navigation systems should permit Service Providers to identify the commercial conditions (cost etc.) of product/service delivery to users.	P9DAPP
6.12	Navigation system should permit the prices of a given application, content item, product or service to vary with time.	P9DAPP

 © ISO/IEC 1999 - All rights reserved

--`,,```,,,,````-`-`,,`,,`,`,,`---

Copyright International Organization for Standardization
Provided by IHS under license with ISO
No reproduction or networking permitted without license from IHS Not for Resale

Ref.	Description	Technology Domain
6.13	Navigation systems should permit the user to select the language used for presentation of menus, functions and options.	P9DAPP
6.14	Navigation systems should offer each Service Provider the opportunity to create an individual "look and feel" to the services.	P9DAPP
6.15	Navigation systems should offer the user a set of consistent or obvious controls and tools in order to facilitate easy operation and migration.	P9DAPP
6.16	Navigation systems should be able to display a single screen image which comprises a "mosaic" of still or moving pictures.	P9DAPP
6.17	Navigation systems should be able to display a multitude of independent image objects as a "mosaic" of still or moving pictures.	P9DAPP
6.18	Navigation systems should be able to display options for selection as a menu of textual items.	P9DAPP
6.19	Navigation systems should be able to recognise that a selection has been made, and which item from the available options has been selected.	P9DAPP
6.20	Navigation systems should be able to trigger the launch of the selected item.	P9DAPP
6.21	Navigation systems should be able to employ intelligent agents to optimise the choices presented to the user.	P9SI
6.21.1	Navigation system must only present material available for viewing (e.g., respect regional blackouts)	P9SI
	AV programme aspects	
6.24	The system should enable the use of Electronic Programme Guides to plan programme content selection.	P9SI
6.25	The system should permit personally tailored Electronic Guides to be produced and used.	P9SI AND P9PAPP
6.26	The system should permit the user to select a content element for immediate consumption using an Electronic Programme Guide.	P9SI
6.27	The system should permit the user to select a content element for future consumption using an Electronic Programme Guide.	P9SI
6.28	Electronic Programme Guides may be user driven by date/ time/ source/ programme type etc.	P9SI
6.29	Electronic Programme Guides may present information as text, graphics, audio or video.	P9SI AND (P9DAPP OR P9PAPP)
6.30	Electronic Programme Guides should support the categorisation of material by programme-type (e.g., Sports).	P9SI
6.31	Electronic Programme Guides should support the inclusion of additional information (e.g., cast lists).	P9SI AND (P9DAPP OR P9PAPP)
6.32	The system should include means to allow Content Providers to supply information to support Electronic Programme Guides.	P9SI
6.33	Electronic Programme Guides should permit content presentation format and resolution to be described.	P9SI
6.34	Electronic Programme Guides should permit the use of a customised filter to prevent display of unwanted material.	P9SI
6.35	Electronic Programme Guides should permit users to select content material by rating.	P9SI
6.36	The system should permit a user to review the available combinations of delivery dates/times and prices.	P9SI AND (P9DAPP OR P9PAPP)
6.37	The system should permit a user to review the available combinations of presentation format/resolution and prices.	P9SI AND (P9DAPP OR P9PAPP)

Copyright International Organization for Standardization
Provided by IHS under license with ISO
No reproduction or networking permitted without license from IHS Not for Resale

Ref.	Description	Technology Domain
6.38	The system should enable a Service Provider to be able to display the time interval between consecutive copies of content (e.g., for NVoD).	P9SI
6.39	The system should enable a user to review lists of content items booked in advance.	P9SI AND (P9DAPP OR P9PAPP)
6.40	The system should enable a user to cancel a content element item booked in advance.	P9SI AND (P9DAPP OR P9PAPP)
6.43	The system should permit the user to browse through any audio-visual clips.	P9DAPP + functions identified for requirement 4.28
6.44	The system, when NVoD content viewing has been paused, should enable the display of the time remaining before viewing may recommence.	P9DAPP
6.45	The system should facilitate the display of lists on multiple pages.	P9DAPP
6.46	85% of the users must be able to use 75% of the user terminal functions within 2 minutes without reading an instruction manual	No specific DAVIC tool required
6.47	The system should permit the use of Electronic Programme Guides for current and future events.	P9SI
	APPLICATION LAUNCH	
	General	
7.02	The system should provide the means to transfer data (executable code, files etc.) to ancillary equipment connected to the STU (Computer, Printer, Games Machine etc.).	P7MPMMDP
7.03	The system should provide the means to select and download platform-independent application programs to the STU.	P9DAPP OR P9PAPP
7.04	The system should provide the means to select and download platform-independent application programs to the STU (e.g., Java classes)	P9DAPP OR P9PAPP
7.05	The system should provide the means to select and download platform-dependent application programs (outside the scope of DAVIC) to the STU.	P9DAPP
7.06	The system should enable an STU-specific application program (outside the scope of DAVIC) to be launched on the STU.	P9DAPP
7.07	The system should enable the STU to automatically identify and preload channels and services available on cable, satellite and terrestrial networks.	P9SI
	MEDIA SYNCHRONISATION LINK FUNCTIONS	
8.01	The system should enable media components which may be delivered and stored separately to be presented in a synchronised manner.	P9DAPP AND P7URTSE
8.02	The system should enable text and graphics to be scrolled on the screen within a defined window size.	P9DAPP
8.03	The system should enable text and graphics windows to be repositioned during the programme.	P9DAPP
8.04	The system should enable text and graphics displays to be transparent or coloured as defined by the programme content.	P9DAPP
8.05	The system should provide the means to cue user activity (e.g., a moving cursor, a bouncing ball, or a moving colour change).	P9DAPP
8.06	The system should enable the transfer and subsequent synchronisation of media components.	P9DAPP

 © ISO/IEC 1999 - All rights reserved

Copyright International Organization for Standardization
Provided by IHS under license with ISO
No reproduction or networking permitted without license from IHS Not for Resale

Ref.	Description	Technology Domain
8.07	The system should permit insertion points to be defined within content to enable sequential media components to be synchronised (e.g., advertisements).	P9DAPP AND P7URTSE
8.08	The system should enable the sequential components inserted at the synchronisation points to change.	P9DAPP AND P7URTSE
8.09	The system should enable one application to launch another (e.g., advertisements providing links to Home Shopping).	P9DAPP
8.10	The system should provide the means by which users may be linked in real time to a general broadcast message.	P9DAPP
8.11	The system should allow linkages to general broadcast messages to be regionally focused.	P9DAPP
	APPLICATION CONTROL FUNCTIONS	
9.01	A user should be given visual/audio feedback within 250ms whenever an application control function is utilised.	P9DAPP
9.02	The STU should provide at least a defined set of user-activated command "keys" (e.g., on a remote control, keyboard etc.).	P9DAPP
9.03	The STU should provide direct selection of any "broadcast" channel within 300ms.	P9DAPP
	Functions operating on Linear Material	
9.04	The user should be able to start and stop the presentation of the material.	P9DAPP
9.05	The user should be able to pause (with frame freeze) and resume the presentation of the material.	P9DAPP
	Programme presentation functions for linear material.	
9.13	The user should be able to choose the language for the audio presentation from those available.	P9SI
9.14	The user should be able to choose whether the material is presented with subtitles overlaid on the picture.	P9CGR OR P9CGS
9.15	The user should be able to choose the language for the presentation of subtitles and other text from those available.	P9SI
9.16	The system should be able to present additional overlaid text/graphics, either application demanded or user-selected (e.g., optional supplementary information for the hearing impaired or lyrics for Karaoke-on-Demand).	P9DAPP
9.17	The STU should present the user with options for presentation for subtitles, text and graphics (e.g., position, font, size and style).	P9DAPP
	Indexing functions	
	Parallel Stream material	
9.21	The system should enable the use of content material comprised of linked objects, in which one object may link to two or more objects (e.g., sad/happy ending to a movie).	P9DAPP and P7URTSE
9.22	The system should allow the end-user to select the link utilised at a decision point.	P9DAPP and P7URTSE
9.23	The system should enable the use of multiple related parallel broadcast streams, offering the user the ability to select between these streams.	P9DAPP
	Games	
9.26	Provide the ability to synchronize STU applications with the audio/video stream	P7URTSE
	PRESENTATION CONTROL FUNCTIONS	
10.01	A user should be given visual/audio feedback within 250ms whenever a presentation control function is utilised.	P9DAPP
10.02	The system should permit the user to make hard copy from the application, subject to copyright controls.	P7URTS
10.03	The receiving site will contain an appropriate user interaction device able to invoke all functionality	P9DAPP

Copyright International Organization for Standardization
Provided by IHS under license with ISO
No reproduction or networking permitted without license from IHS Not for Resale

Ref.	Description	Technology Domain
10.04	Display normal and widescreen material on either normal or widescreen displays	P9VIDMR or P9VIDHR or P9VIDMS or P9VIDHs
	USAGE DATA FUNCTIONS	
11.01	The system should provide a standard interface to external agencies and systems to permit access to usage data for Billing, Service Monitoring and Royalty purposes.	TBD
11.03	The system should record use of network, Server and content resources.	TBD
11.04	The system should be able to track use by different users within one customer account (e.g., parents/children).	P10CA0 OR P10CA1
11.06	The system should be able to track the use of Copyright (IPR) material.	P10CA0 OR P10CA1
	Real-time pricing functions	
11.07	The system should enable Service Providers to offer flexible charging structures to individual users.	P10CA0 OR P10CA1
11.08	The system should enable a user to be advised of the duration of free viewing time before charging starts.	P10CA0 OR P10CA1
11.09	The system should enable users to cancel viewing within free time, and to precept default action at end of free time.	P10CA0 OR P10CA1
11.10	The user should be able to see the cost of current or just-finished transaction or service.	P10CA0 OR P10CA1
11.11	The system should enable the user to be able to obtain information on the up-to-date credit limit and bill liabilities.	P10CA0 OR P10CA1
11.12	The system should allow a Service Provider to obtain information on bill liabilities.	P10CA0 OR P10CA1
	USER PROFILE FUNCTIONS	
12.01	The system should enable the creation of personal profiles for user(s) which record preferences (e.g., shoe size for applications such as teleshopping).	P9DAPP
12.02	The system should support portable user profiles (e.g., smart card or central database)..	TBD
	SECURITY FUNCTIONS	
13.01	The reporting of distribution and usage data, must be protected	P10CA0 OR P10CA1
13.02	Security measures applied to content should not negatively impact the delivered quality of the content	P10CA0 OR P10CA1
13.03	Reporting of distribution and usage data must be Auditable	P10CA0 OR P10CA1
13.04	All copies (authorised and unauthorised) of content must be traceable	P7URTS
13.05	All instances of delivery should be securely reported, with minimal loss	P10CA0 OR P10CA1
13.06	IPR tracking should be supported at the elemental level (picture, audio, piece of picture or audio)	P7URTS
13.07	The availability of the clear digital stream is controllable by the system	P7URTS
13.10	Usage data must be secure	P10CA0 or P10CA1
13.11	The system must support a hierarchical security approach, such that .a security failure may translate into loss of e.g., 1 frame, 5 minutes, or a large amount	P10CA0 OR P10CA1

 © ISO/IEC 1999 - All rights reserved

--`,,```,,,,````-`-`,,`,,`,`,,`---

Copyright International Organization for Standardization
Provided by IHS under license with ISO
No reproduction or networking permitted without license from IHS Not for Resale

Ref.	Description	Technology Domain
13.12	Security measures should not significantly increases latency for e.g., channel up/down	P10CA0 OR P10CA1
13.13	Security should not require multiple formats and/or versions of content for distribution	P7URTS
13.14	Meta-data should be subject to the same level of security as audio and video content	P10CA0 OR P10CA1
13.15	The system must support Regional blackout	P10CA0 OR P10CA1
13.16	The system should support a degraded digital stream output capability for recording	P10CA0
13.17	Unauthorised intrusion should not compromise end-to-end security	P10CA0 OR P10CA1
13.18	Security management should not be complex	P10CA0 OR P10CA1
13.19	All cases of entity authentication must be traceable and auditable	P10CA0 OR P10CA1
13.20	The system should support Irrefutability and non-repudiation functions such that they are usable as legal proof	P10CA0 OR P10CA1
13.21	Data to and from the DAVIC system should be protected such that it is secure and private within the DAVIC system	P10CA0 OR P10CA1
13.22	Upgrades to security elements in face of a breach should be easy and quick	P10CA0 OR P10CA1
13.23	Delivery in the face of security failure may be allowed by the Service Provider	P10CA0 OR P10CA1
13.24	The system must support secure download of software	P10DL
13.25	Source of security related problems should be readily determinable	P10CA0 OR P10CA1
13.26	Security processes will not impose significant overheads on the DVIC system performance	P10CA0 OR P10CA1
13.27	Security processes should not cause non-delivery of authorised media	P10CA0 OR P10CA1
13.28	Security processes should be transparent to running (operating) of network	P10CA0 OR P10CA1
13.29	Unauthorised intrusion should not compromise end-to-end security	P10CA0 OR P10CA1
13.30	Multiple scramble/descramble processes are allowed	P10CA0
13.31	Scrambling for network security reasons should be allowed	No specific tool required
13.32	Access to the Network must be controllable	P9DAPP
13.33	Media delivery should be controllable based on e.g., rating, time of day, user, etc.	P10CA0 OR P10CA1
13.34	Purchases should be controllable based on e.g., user, credit, existing billings, etc.	P9DAPP
13.35	All transactions must be secure	P10AUT
13.36	Access to profile data must be controllable by user	P9DAPP
13.37	Usage data should be anonymous for statistical analyses	No tool required
13.38	Individual user data will be secure	TBD
13.40	The system will support both subscriber and user authentication	P10AUT
13.41	Usage Data reporting must be accurate, auditable	TBD
13.42	All equipment must allow testing under secure environments for all features (including clear digital stream)	No specific DAVIC tool required

Copyright International Organization for Standardization
Provided by IHS under license with ISO
No reproduction or networking permitted without license from IHS Not for Resale

Ref.	Description	Technology Domain
13.43	Inclusion of security features must still allow for export	P10CA0 OR P10CA1
13.44	Security should not significantly increase complexity	P10CA0 OR P10CA1
13.45	Manufacturing must minimise requirements for secure facilities	P10CA0 OR P10CA1
13.46	Access to data limited to authorised users only	P10CA0 OR P10CA1
13.49	The DAVIC system must support authentication to and from external support systems	P10AUT
13.51	The system must support identification of consumed material	P10CA0 or P10CA1
13.52	The system must support identification of the IPR holder	P9CNLD
13.53	The system must support identification of author	P9CNLD
13.54	The system must support identification of the source/provider of material	P9CNLD
13.55	Content control and supervision must be authenticatable	P10AUT
13.56	Proof/tracing data for Legal proceedings must be authenticatable	P10AUT
13.57	Transmission logging data should be secure and authenticatable	P10AUT
13.60	Provide plug and play capability for connection to in home digital consumer electronic equipment	P7MPMMDP
	FUNCTIONS CONSIDERED TO BELONG TO APPLICATIONS	
103.12	The system should permit collaborative (group) shopping.	P9DAPP
	Games applications	
104.01	The system should permit high scores for games to be recorded.	P9DAPP
104.02	The system should enable a service provider to provide advertisements for new games.	P9DAPP
104.03	The system should permit a service provider to record and distribute high scores for games.	P9DAPP

A.4 List of tools required to implement the system functions

A.4.1 Introduction

In this subclause for each system function listed above a short descriptive summary is provided along with a detailed lists of DAVIC tools is given in the form of a table. Note that the normative technical content of this Appendix is constrained to these detailed lists. The tables contain for each component of the DAVIC tools: a description of the DAVIC tool component, a reference to the DAVIC specification, additional implementation information which may be required for full interoperability and other contours for which the tool component is relevant.

A.4.2 Mid- and high-layer protocols

Common transport mechanisms are vital to realize full service interoperability. Apart from the functionality to deliver accurately synchronized streams (A/V/Graphics) functionality is needed to transmit data sets (files) which are presented upon user demand. Key tools specified by DAVIC include MPEG-2 Transport Streams and MPEG-2 DSMCC.

Table A4-1 describes the protocols required for the transmission of uni-directional Real-Time Streams. This is the basic function to transmit Audio and Video while maintaining proper synchronisation.

 © ISO/IEC 1999 - All rights reserved

Copyright International Organization for Standardization
Provided by IHS under license with ISO
No reproduction or networking permitted without license from IHS Not for Resale

Table A4-1 Function P7URTS: High and Mid layer Protocols for unidirectional Real-Time Stream Transmission

#	Description	DAVIC Clause	Additional Implementation Information	Common with Contour
1	S1 Flow Description	Part 7 Section 6.1		IDB
2	Overview of protocol stacks	Part 7 Section 6.2		IDB
4	MPEG-2 Program specific Information. Indicates which streams are present in a MPEG-2 Transport Stream	Part 7 Section 6.3.10		IDB
5	MPEG-2 Transport Stream - overall protocol for the transmission of uni-directional information	Part 7 Section 6.3.11		IDB
6	MPEG Packetised Elementary Stream for the transmission of real-time synchronised streams	Part 7 Section 6.3.1 & 6.3.4		IDB

Table A4-2 specifies some additional mid- and high-layer protocols for Real-Rime stream transmission. In particular with respect to streams of graphic pictures (animations, subtitling) and Stream Events which are markers embedded in a real-time stream which can be used to trigger a specific (application defined) action in a service.

Table A4-2 — Function P7URTSE: Additional High and Mid layer Protocols for unidirectional Real-Time Stream Transmission

#	Description	DAVIC Clause	Additional Implementation Information	Common with Contour
1	Stream Events - Markers in the broadcast stream to trigger events in the application	Part 7 Section 7.3.8.2		IDB
2	(Transport of) Normal Play Time and Stream Mode	Part 7 Section 7.1 - third paragraph		IDB

Apart from Real-Time streams, broadcast applications also require access to other data which can be presented under application control to the user. Examples are text, graphics, sounds. Within DAVIC a mechanism is adopted to cyclically transmit data in a carousel fashion. Also a “name space” is provided which allows applications to refer to specific named objects transmitted via the carousels. Table A4-3 specifies the DAVIC tools used for these functions. The key tool is MPEG-2 DSM-CC.

Table A4-3 — Function P7UNRT: Mid- and High-layer protocols for unidirectional Non Real-Time Transmission

Item	Description	DAVIC Clause	Additional Implementation Information	Common with Contour
1	S1 Flow Description	Part 7 Section 6.1		IDB
2	Overview of protocol stacks	Part 7		IDB

Copyright International Organization for Standardization
Provided by IHS under license with ISO
No reproduction or networking permitted without license from IHS Not for Resale

		Section 6.2		
3	MPEG-2 Program specific Information. Indicates which streams are present in a MPEG-2 Transport Stream	Part 7 Section 6.3.10		IDB
4	MPEG-2 Transport Stream - overall protocol for the transmission of uni-directional information	Part 7 Section 6.3.11		IDB
5	MPEG-2 Private Section - generic method for transmission of chunks of data	Part 7 Section 6.3.2		IDB
6	DSMCC- Private Section Specific instance of P7UNRT.1 for the transmission of DSMCC data	Part 7 Section 6.3.3	Not applicable to support P9SI	IDB
7	Stored Monomedia Stream - specifies the use of DSMCC U-U Object Carousels Provides transmission of "A/V clips - sound maps" which are stored in the receiver for playback under application control. Example is a audible effect if a user presses a button. These streams are encapsulated in PES packets and transmitted as DSMCC U-U objects.	Part 7 Section 6.3.7	Only applicable to support P9VIDMS, P9VIDHS, P9AUDMP1S, P9AUATS, P9CGS, P9SPICS, P9CCS, P9LNAD	IDB
8	Stand-alone Monomedia Components - provides transmission of bitmaps, text etc - specifies the use of DSMCC U-U Object Carousels.	Part 7 Section 6.3.8	Only applicable to support P9CGB, P9SPB, P9TXT, P9DAPP, P9PAPP	IDB
9	Other Data - such as Service Information, Application Code - transmitted as MPEG-2 Private Sections	Part 7 Section 6.3.9	Only applicable to support P9SI	IDB
10	DSM-CC Options Summary - add precision to the use of DSMCC in the DAVIC context	Part 7 Section 7.3.1	Only those clauses which are relevant to uni-cast transmission - only applicable if DSMCC Object Carousels are used	IDB
11	File Access - Describes the functions to Access Files transmitted via Carousels	Part 7 Section 7.3.9	Only the read function is supported - only applicable if DSMCC Object Carousels are used	IDB
12	Use of the DSM-CC User-to-User interface in the DAVIC distribution profile	Part 7 Section 7.3.11	Only applicable if DSMCC Object Carousels are used	IDB
13	Support of DSM-CC User to User Interaction - specifies the use of DSMCC Object Carousels	Part 7 Section 7.2.2 - Figure 7-7	Only applicable if DSMCC Object Carousels are used	IDB

DAVIC has selected DSMCC as the interface to control content transfer. Table A4-4 specificies the DAVIC tools used for content loading

 © ISO/IEC 1999 - All rights reserved

--`,,```,,,,````-`-`,,`,,`,`,,`---
Copyright International Organization for Standardization
Provided by IHS under license with ISO
No reproduction or networking permitted without license from IHS
Not for Resale

Table A4-4 — Function P7CNLD: High and Mid Layer Protocols for content transfer

#	Description	DAVIC Clause	Additional Implementation Information	Common with Contour
1	A10 content transfer Interface	Part 7 Section 7.3.14		IDB

DAVIC has specified tools to interface a Network-Interface-Unit to a Set-Top-Unit. Table A4-5 specificies the protocols defined by DAVIC for use on this interface.

Table A4-5 — Function P7A0: Protocols for interfacing a Network-Interface-Unit to a Set-Top-Unit

#	Description	DAVIC Clause	Additional Implementation Information	Common with Contour
1	Connection Block Descriptors and Initialisation Protocols for A0 - Protocols to initialise and control the Network-Interface-Unit from the Set-Top-Unit	Part 7 Section 12		IDB

DAVIC has specified tools to equip a Set-Top-Unit with a Multimedia Dataport. This Multimedia Dataport can be used to connect the STU to a variety of other equipment. Table A4-6 specificies the protocols defined by DAVIC for use on this interface to support MPEG based services.

Table A4-6 — Function P7MPMMDP: Protocols for MPEG based services on the STU Multimedia Dataport

#	Description	DAVIC Clause	Additional Implementation Information	Common with Contour
1	Protocols Stacks for the STU Multimedia Dataport - MPEG Based Services	Part 7 Section 13.1.1		IDB
2	TC Layer for MPEG Applications	Part 8 Section 9.2.3.1		IDB

A.4.3 Lower Layer Protocols and Physical Interfaces

DAVIC has specified tools for digital transmission for a variety of media. This subclause details those functions applicable to broadcast.

A.4.3.1 Passband Uni- directional PHY on coax

Table A4-7 indicates the clauses from DAVIC Part 8 relevant to the unidirectional transmission over radio frequency coax (up to 1 GHz bandwidth) using QAM modulation in the context of the *Enhanced Digital* Broadcast Contour.

--`,,```,,,,````-`-`,,`,,`,`,,`---

Copyright International Organization for Standardization
Provided by IHS under license with ISO
No reproduction or networking permitted without license from IHS Not for Resale

Table A4-7 — Function P8PBUCX: Passband Unidirectional PHY on coax

#	Description	DAVIC Clause	Additional Implementation Information	Common with Contour
1	Passband Unidirectional Phy on coax	Part 8 Section 7.7.X	The frame structure should be MPEG-2 TS. Sections 7.7.3, 7.7.4.1 and 7.7.5.X do not apply. Note that two Grades are specified. Selection between Grade A and Grade B (256 QAM) has to be agreed upon by the parties involved with the realisation of a DAVIC system	IDB

A.4.3.2 Passband Uni- directional PHY on satellite

Table A4-8 indicates the clauses from DAVIC Part 8 relevant to the uni-directional transmission over a satellite transmission system using QPSK modulation in the context of the *Enhanced Digital* Broadcast Contour.

Table A4-8 — Function P8PBUSL: Passband Unidirectional PHY on satellite

#	Description	DAVIC Clause	Additional Implementation Information	Common with Contour
1	Passband Unidirectional Phy on Satellite	Part 8 Section 7.9.X		IDB

A.4.3.3 Passband Uni- directional PHY on MMDS

DAVIC defines tools for the uni-directional transmission over radio frequency (up to 10 GHz) using QAM modulation. It is refered to as Microwave Multipoint Distribution Services. Table A4-9 indicates the clauses from DAVIC Part 8 relevant to MMDS in the context of the *Enhanced Digital* Broadcast Contour.

 © ISO/IEC 1999 - All rights reserved

Copyright International Organization for Standardization
Provided by IHS under license with ISO
No reproduction or networking permitted without license from IHS
Not for Resale

Table A4-9 — Function P8PBUMD: Passband Unidirectional PHY on MMDS

#	Description	DAVIC Clause	Additional Implementation Information	Common with Contour
1	Passband Unidirectional Phy on MMDS	Part 8 Section 7.10.X	The frame structure should be MPEG-2 TS. Hence 7.10.1.3 and 7.10.1.5 are not applicable. 7.10.2 and 7.10.3 are not applicable to Uni-directional MMDS. Note that three grades are specified. Selection between Grade A, A+, B (16 and 64 QAM, 16 and 64 QAM/TCM,256 QAM) has to be agreed upon by the parties involved with the realisation of a DAVIC system	IDB

A.4.3.4 Passband Uni-directional PHY on LMDS

DAVIC defines tools for the uni-directional transmission over radio frequency (above 10 GHz) using QPSK or QAM modulation. It is referred to as Local Multipoint Distribution Services. Table A4-10 indicates the clauses from DAVIC Part 8 relevant to uni-directional LMDS in the context of the *Enhanced Digital* Broadcast Contour.

Table A4-10 — Function P8PBULM: Passband Unidirectional PHY on LMDS

#	Description	DAVIC Clause	Additional Implementation Information	Common with Contour
1	Passband Uni-directional Phy on LMDS	Part 8 Section 7.11.X	The frame structure should be MPEG-2 TS. Hence 7.11.1.3 and 7.11.1.5 are not applicable. 7.11.2 and 7.11.3 are not applicable to Uni-directional MMDS. Note that two grades are specified. Selection between Grade A and B (QPSK or 16 QAM) has to be agreed upon by the parties involved with the realisation of a DAVIC system	IDB

A.4.3.5 Network-Interface-Unit to Set-Top-Unit Interface

DAVIC has specified tools to interface a Network-Interface-Unit to a Set-Top-Unit. Specifically one set of tools for NIUs located within the STU enclosure (e.g.: "internal" NIUs), and one for standalone NIUs located outside the STU enclosure (e.g.: "external" NIUs). Table A4-11 specificies the physical interface defined by DAVIC for the intenal NIUs. Table A4-12 specificies the physical interface defined by DAVIC for the external NIUs.

Copyright International Organization for Standardization
Provided by IHS under license with ISO
No reproduction or networking permitted without license from IHS Not for Resale

Table A4-11 — Function P8A0INT: Interface of Set-Top-Unit to Internal Network-Interface-Unit

#	Description	DAVIC Clause	Additional Implementation Information	Common with Contour
1	Introduction to the A0 interface	Part 8 Section 8.1	Description only	IDB
2	Functional Description of the A0 interface	Part 8 Section 8.2	Description only	IDB
3	Capability Levels Required for A0	Part 8 Section 8.3	Only level A capability is required	IDB
4	Definition of Internal and External A0	Part 8 Section 8.4	For P8A0INT only the Internal A0 is applicable	IDB
5	Specification of the Internal A0 (Digital Part)- specifies connector, pin assignment and electrical specification	Part 8 Section 8.5		IDB
6	Optional Internal A0 Specification (Analog Pass-Through Part) - specifies how digitized analog baseband video and audio is carried over the internal A0 interface	Part 8 Section 8.6	Support of this tool is optional	IDB

Table A4-12 — Function P8A0EXT: Interface of Set-Top-Unit to External Network-Interface-Unit

#	Description	DAVIC Clause	Additional Implementation Information	Common with Contour
1	Introduction to the A0 interface	Part 8 Section 8.1	Description only	IDB
2	Functional Description of the A0 interface	Part 8 Section 8.2	Description only	IDB
3	Capability Levels Required for A0	Part 8 Section 8.3	Only level A capability is required	IDB
4	Definition of Internal and External A0	Part 8 Section 8.4	For P8A0INT only the Internal A0 is applicable	IDB
5	External A0 Specification (Digital Part) - specifies the use of IEEE 1394	Part 8 Section 8.7		IDB
6	Optional Internal A0 Specification (Analog Pass-Through Part) - specifies how analog baseband video and audio is carried over the external A0 interface	Part 8 Section 8.8	Support of this tool is optional	IDB

A.4.3.6 STU Dataport Interface

DAVIC has specified tools to equip a Set-Top-Unit with a Multimedia Dataport. This Multimedia Dataport can be used to connect the STU to a variety of other equipment. Table A4-13 specificies the physical interface defined by DAVIC for this purpose.

 © ISO/IEC 1999 - All rights reserved

--`,,```,,,,````-`-`,,`,,`,`,,`---

Copyright International Organization for Standardization
Provided by IHS under license with ISO
No reproduction or networking permitted without license from IHS Not for Resale

Table A4-13 — Function P8MMDP: Physical Inteface for STU Multimedia Dataport

#	Description	DAVIC Clause	Additional Implementation Information	Common with Contour
1	Physical Specification - IEEE 1394-1995	Part 8 Section 9.2, 9.2.1		IDB
2	Electrical Specification - IEEE 1394-1995	Part 8 Section 9.2.2		IDB

A.4.4 Information Representation

System interoperability requires agreements on the way the various types of information required for the application are expressed. DAVIC Part 9 describes a comprehensive set which in general reuses the appropriate standards from the Classical Broadcast domain (DVB and ATSC) as well as from the WWW. Apart from the actual coding formats, DAVIC Part 9 also describes methods of encapsulation to be used in conjunction with the transport mechanisms specified in Section A.4.2.

A.4.4.1 Compressed Video

DAVIC specifies the use of MPEG-2 for compressed video coding. DAVIC distinguishes between two sets of resolutions and also whether the stream is real-time (presented immediately after reception) or a stored stream (presented from memory under control of an application) The following tables: Table A4-14, Table A4-15, Table A4-16, and Table A4-17 indicate the clauses from DAVIC Part 9 relevant to compressed video in the context of the *Enhanced Digital* Broadcast Contour for the functions identified above.

Copyright International Organization for Standardization
Provided by IHS under license with ISO
No reproduction or networking permitted without license from IHS Not for Resale

Table A4-14 — Function P9VIDMR: Information Representation for real-time Compressed Video streams with a resolution up to ITU-R 601

#	Description	DAVIC Clause	Additional Implementation Information	Common with Contour
1	Compressed Video - Specifies the Use of MPEG-1/2 Video	Part 9 Section 6.10		IDB
2	Coding Constraints for video with a resolution up to ITU-R 601	Part 9 Section 6.10.1.x		IDB
4	Types of Monomedia Components – Identifies Compressed Video as an instance of a Monomedia Component	Part 9 Section 7.1		IDB
5	Real-time and Stored Monomedia Streams - Identifies Compressed Video as an instance of both real-time and stored streams	Part 9 Section 7.2	Support for Compressed Video as a stored stream is not a part of P9VIDMR	IDB
6	Carriage of Monomedia Streams in PES Packets	Part 9 Section 7.3		IDB
7	Packetization of MPEG and ATSC-defined Components	Part 9 Section 7.3.1		IDB
8	Transport of Real-Time Streams	Part 9 Section 8, 8.1		IDB

Table A4-15 — Function P9VIDHR: Information Representation for real-time Compressed Video streams with a resolution beyond ITU-R 601

#	Description	DAVIC Clause	Additional Implementation Information	Common with Contour
1	Compressed Video - Specifies the Use of MPEG-1/2 Video	Part 9 Section 6.10		IDB
3	Coding Constraints for video with a resolution beyond ITU-R 601	Part 9 Section 6.10.2.x		IDB
4	Types of Monomedia Components – Identifies Compressed Video as an instance of a Monomedia Component	Part 9 Section 7.1		IDB
5	Real-time and Stored Monomedia Streams - Identifies Compressed Video as an instance of both real-time and stored streams	Part 9 Section 7.2	Support for Compressed Video as a stored stream is not a part of P9VIDHR	IDB
6	Carriage of Monomedia Streams in PES Packets	Part 9 Section 7.3		IDB
7	Packetization of MPEG and ATSC-defined Components	Part 9 Section 7.3.1		IDB
8	Transport of Real-Time Streams	Part 9 Section 8, 8.1,		IDB

 © ISO/IEC 1999 - All rights reserved

Copyright International Organization for Standardization
Provided by IHS under license with ISO
No reproduction or networking permitted without license from IHS
Not for Resale

Table A4-16 — Function P9VIDMS: Information Representation for stored Compressed Video streams with a resolution up to ITU-R 601

#	Description	DAVIC Clause	Additional Implementation Information	Common with Contour
1	Compressed Video - Specifies the Use of MPEG-1/2 Video	Part 9 Section 6.10		IDB
2	Coding Constraints for video with a resolution up to ITU-R 601	Part 9 Section 6.10.1.x		IDB
4	Types of Monomedia Components - Identifies Compressed Video as an instance of a Monomedia Component	Part 9 Section 7.1		IDB
5	Real-time and Stored Monomedia Streams - Identifies Compressed Video as an instance of both real-time and stored streams	Part 9 Section 7.2	Support for Compressed Video as a real-time stream is no a part of P9VIDMS	IDB
6	Carriage of Monomedia Streams in PES Packets	Part 9 Section 7.3		IDB
7	Packetization of MPEG and ATSC-defined Components	Part 9 Section 7.3.1		IDB
8	Transport of stored streams	Part 9 Section 8, 8.2		IDB

Table A4-17 — Function P9VIDHS: Information Representation for stored Compressed Video streams with a resolution up to ITU-R 601

#	Description	DAVIC Clause	Additional Implementation Information	Common with Contour
1	Compressed Video - Specifies the Use of MPEG-1/2 Video	Part 9 Section 6.10		IDB
3	Coding Constraints for video with a resolution beyond ITU-R 601	Part 9 Section 6.10.2.x		IDB
4	Types of Monomedia Components - Identifies Compressed Video as an instance of a Monomedia Component	Part 9 Section 7.1		IDB
5	Real-time and Stored Monomedia Streams - Identifies Compressed Video as an instance of both real-time and stored streams	Part 9 Section 7.2	Support for Compressed Video as a real-time stream is not a port of P9VIDHS	IDB
6	Carriage of Monomedia Streams in PES Packets	Part 9 Section 7.3		IDB
7	Packetization of MPEG and ATSC-defined Components	Part 9 Section 7.3.1		IDB
8	Transport of Stored streams	Part 9 Section 8, 8.2		IDB

Copyright International Organization for Standardization
Provided by IHS under license with ISO
No reproduction or networking permitted without license from IHS Not for Resale

A.4.4.2 Compressed Audio

DAVIC specifies the use of MPEG-1 for compressed audio coding as well as ATSC A/52 for surround sound compressed audio coding. Compressed audio can be used as a stream which is played directly from the network and also as a stored stream which is played from memory under control of an application. The following tables: indicate the clauses from DAVIC Part 9 relevant to compressed audio in the context of the *Enhanced Digital* Broadcast Contour for the functions identified above.

Table A4-18 — Function P9AUDMP1R: Information Representation for Real-Time Compressed Audio using MPEG-1

#	Description	DAVIC Clause	Additional Implementation Information	Common with Contour
1	Compressed Audio - Specifies the use of MPEG-1 and ATSC A/52 as audio coding standards	Part 9 Section 6.7		IDB
2	Compressed audio - coding using MPEG-1 Audio Coding	Part 9 Section 6.7.1		IDB
4	Types of Monomedia Components - Identifies Compressed Audio as an instance of a Monomedia Component	Part 9 Section 7.1		IDB
5	Real-time and Stored Monomedia Streams - Identifies Compressed Audio as an instance of both real-time and stored streams	Part 9 Section 7.2	Support for Compressed Audio as a stored stream is not part of P9AUDMP1R	IDB
6	Carriage of Monomedia Streams in PES Packets	Part 9 Section 7.3		IDB
7	Packetization of MPEG and ATSC-defined Components	Part 9 Section 7.3.1		IDB
8	Transport of Real-Time Streams and Components	Part 9 Section 8, 8.1		IDB

 © ISO/IEC 1999 - All rights reserved

Copyright International Organization for Standardization
Provided by IHS under license with ISO
No reproduction or networking permitted without license from IHS Not for Resale

Table A4-19 — Function P9AUDATR: Information Representation for Real-Time Compressed Audio streams using ATSC A/52

#	Description	DAVIC Clause	Additional Implementation Information	Common with Contour
1	Compressed Audio - Specifies the use of MPEG-1 and ATSC A/52 as audio coding standards	Part 9 Section 6.7		IDB
3	Compressed audio coding for multi-channel surround sound using ATSC A/52	Part 9 Section 6.7.2		IDB
4	Types of Monomedia Components - Identifies Compressed Audio as an instance of a Monomedia Component	Part 9 Section 7.1		IDB
5	Real-time and Stored Monomedia Streams - Identifies Compressed Audio as an instance of both real-time and stored streams	Part 9 Section 7.2	Support for Compressed Audio as a stored stream is not part of P9AUDATR	IDB
6	Carriage of Monomedia Streams in PES Packets	Part 9 Section 7.3		IDB
7	Packetization of MPEG and ATSC-defined Components	Part 9 Section 7.3.1		IDB
8	Transport of Real-Time Streams	Part 9 Section 8, 8.1		IDB

Table A4-20 — Function P9AUDMP1S: Information Representation for stored Compressed Audio streams using MPEG-1

#	Description	DAVIC Clause	Additional Implementation Information	Common with Contour
1	Compressed Audio - Specifies the use of MPEG-1 and ATSC A/52 as audio coding standards	Part 9 Section 6.7		IDB
2	Compressed audio - coding using MPEG-1 Audio Coding	Part 9 Section 6.7.1		IDB
4	Types of Monomedia Components – Identifies Compressed Audio as an instance of a Monomedia Component	Part 9 Section 7.1		IDB
5	Real-time and Stored Monomedia Streams - Identifies Compressed Audio as an instance of both real-time and stored streams	Part 9 Section 7.2	Support for Compressed Audio as a Real-Time stream is not part of P9AUDMP1S	IDB
6	Carriage of Monomedia Streams in PES Packets	Part 9 Section 7.3		IDB
7	Packetization of MPEG and ATSC-defined Components	Part 9 Section 7.3.1		IDB
8	Transport of Stored Streams	Part 9 Section 8, 8.2		IDB

Copyright International Organization for Standardization
Provided by IHS under license with ISO
No reproduction or networking permitted without license from IHS Not for Resale

Table A4-21 — Function P9AUDATS: Information Representation for stored Compressed Audio streams using ATSC A/52

#	Description	DAVIC Clause	Additional Implementation Information	Common with Contour
1	Compressed Audio - Specifies the use of MPEG-1 and ATSC A/52 as audio coding standards	Part 9 Section 6.7		IDB
3	Compressed audio coding for multi-channel surround sound using ATSC A/52	Part 9 Section 6.7.2		IDB
4	Types of Monomedia Components – Identifies Compressed Audio as an instance of a Monomedia Component	Part 9 Section 7.1		IDB
5	Real-time and Stored Monomedia Streams - Identifies Compressed Audio as an instance of both real-time and stored streams	Part 9 Section 7.2	Support for Compressed Audio as a Real-Time stream is not part of P9AUDATS	IDB
6	Carriage of Monomedia Streams in PES Packets	Part 9 Section 7.3		IDB
7	Packetization of MPEG and ATSC-defined Components	Part 9 Section 7.3.1		IDB
8	Transport of Stored Streams	Part 9 Section 8, 8.2		IDB

A.4.4.3 Still Pictures and Graphics

DAVIC specifies several tools for the representation of Still Pictures and Graphics namely: Still Pictures, Compressed Graphics and Compressed Character Data.. The Still Pictures tool is intended for the representation of natural images. The Compressed Graphics tools is intended for the represenation of synthetic images such as subtitles and animations. The Compressed Character Data tools is intended for the graphical representation of text. All of these tools can used as Real Time or Stored streams. Still Pictures and Compressed Graphics can also be used as a stand-alone component.

A.4.4.3.1 Still Pictures

Many applications require presentation of high-quality (photo-realistic) still images. DAVIC has selected MPEG-2 for this as the facility for MPEG-2 decoding is already present in each receiver and the coding efficiency of MPEG-2 is higher than for other standards such as JPEG.

The following tables indicate the clauses from DAVIC Part 9 relevant to still pictures in the context of the *Enhanced Digital* Broadcast Contour.

 © ISO/IEC 1999 - All rights reserved

Copyright International Organization for Standardization
Provided by IHS under license with ISO
No reproduction or networking permitted without license from IHS Not for Resale

Table A4-22 — Function P9SPICR : Information Representation for Real-Time streams of Still Pictures

#	Description	DAVIC Clause	Additional Implementation Information	Common with Contour
1	Still Pictures - Specifies the use of MPEG-2 I frames	Part 9 Section 6.11.1		IDB
2	Types of Monomedia Components – Identifies Still Pictures as stream or as stand-alone component	Part 9 Section 7.1	Support of Still Pictures as a stand-alone component is not a part of P9SPICR	IDB
3	Real-time and Stored Monomedia Streams - identifies a stream of still pictures as an instance of both real-time and stored streams	Part 9 Section 7.2	Support of Still Pictures as a stored stream is not a part of P9SPICR	IDB
4	Carriage of Monomedia Streams in PES Packets - Specifies that streams of Still Pictures are contained in PES packets	Part 9 Section 7.3		IDB
5	Packetization of MPEG and ATSC-defined Components – Specifies some details with respect to the way Streams of Still pictures are packaged	Part 9 Section 7.3.1		IDB
6	Transport of Real-Time Streams	Part 9 Section 8.1		IDB

Table A4-23 — Function P9SPICS: Information Representation for stored streams of Still Pictures

#	Description	DAVIC Clause	Additional Implementation Information	Common with Contour
1	Still Pictures - Specifies the use of MPEG-2 I frames	Part 9 Section 6.11.1		IDB
2	Types of Monomedia Components - Identifies Still Pictures as stream or as stand-alone component	Part 9 Section 7.1	Support of Still Pictures as a stand-alone component is not a part of P9SPICS	IDB
3	Real-time and Stored Monomedia Streams – identifies a stream of still pictures as an instance of both real-time and stored streams	Part 9 Section 7.2	Support of Still Pictures as a Real-Time stream is not a part of P9SPICS	IDB
4	Carriage of Monomedia Streams in PES Packets - Specifies that streams of Still Pictures are contained in PES packets	Part 9 Section 7.3		IDB
5	Packetization of MPEG and ATSC-defined Components - Specifies some details with respect to the way Streams of Still pictures are packaged	Part 9 Section 7.3.1		IDB
6	Transport of Stored Streams	Part 9 Section 8.2		IDB

Copyright International Organization for Standardization
Provided by IHS under license with ISO
No reproduction or networking permitted without license from IHS Not for Resale

Table A4-24 — Function P9SPB: Information Representation for Still Picture bitmaps

#	Description	DAVIC Clause	Additional Implementation Information	Common with Contour
1	Still Pictures – Specifies the use of MPEG-2 I frames	Part 9 Section 6.11.1		IDB
2	Types of Monomedia Components - Identifies Still Pictures as stream or as stand-alone component	Part 9 Section 7.1	Support of Still Pictures as a stream is not a part of P9SPB	IDB
5	Packetization of MPEG and ATSC-defined Components - Specifies some details with respect to the way Streams of Still pictures are packaged	Part 9 Section 7.3.1		IDB
6	Transport of Stand-alone Monomedia Components	Part 9 Section 8.3		IDB

A.4.4.3.2 Compressed Graphics

DAVIC specifies the use of DVB subtitling for streams of graphics pictures encoded as bitmaps which can be used for e.g., subtitling and animations. Graphics streams can be used as a stream which is played directly from the network and also as a stored stream which is played from memory under control of an application. A third possibility is the use of a single Compressed Graphics bitmap as a stand-alone component. The following tables: indicate the clauses from DAVIC Part 9 relevant to compressed graphics in the context of the *Enhanced Digital* Broadcast Contour for the functions identified above.

Table A4-25 — Function `P9CGR` Information Representation for Compressed Graphics Real-Time streams

#	Description	DAVIC Clause	Additional Implementation Information	Common with Contour
1	Compressed Graphics – Specifies the use of DVB subtitling	Part 9 Section 6.12.2 , 6.12.2.1		IDB
2	Types of Monomedia Components – Identifies Compressed Graphics as a stream or as a stand-alone component	Part 9 Section 7.1	Support of Compressed Graphics as a stand-alone component is not a part of P9CGR	IDB
3	Real-time and Stored Monomedia Streams - Identifies Compressed Graphics an instance of both real-time and stored streams	Part 9 Section 7.2	Support of stored streams is not a part of P9CGR	IDB
4	Carriage of Monomedia Streams in PES Packets - Specifies that Compressed Graphics is carried in PES packets	Part 9 Section 7.3		IDB
5	Packetization of DVB-defined Components - Specifies that the packetization of Compressed Graphics conforms to the DVB subtitling specification	Part 9 Section 7.3.2		IDB
6	Transport of Real-Time Streams	Part 9 Section 8.1		IDB

 © ISO/IEC 1999 - All rights reserved

Copyright International Organization for Standardization
Provided by IHS under license with ISO
No reproduction or networking permitted without license from IHS Not for Resale

Table A4-26 — Function P9CGS Information Representation for Compressed Graphics stored streams

#	Description	DAVIC Clause	Additional Implementation Information	Common with Contour
1	Compressed Graphics - Specifies the use of DVB subtitling	Part 9 Section 6.12.2, 6.12.2.1		IDB
2	Types of Monomedia Components – Identifies Compressed Graphics as a stream or as a stand-alone component	Part 9 Section 7.1	Support of Compressed Graphics as a stand-alone component is not a part of P9CGS	IDB
3	Real-time and Stored Monomedia Streams – Identifies Compressed Graphics an instance of both real-time and stored streams	Part 9 Section 7.2	Support of real-time streams is not a part of P9CGS	IDB
4	Carriage of Monomedia Streams in PES Packets – Specifies that Compressed Graphics is carried in PES packets	Part 9 Section 7.3		IDB
5	Packetization of DVB-defined Components - Specifies that the packetization of Compressed Graphics conforms to the DVB subtitling specification	Part 9 Section 7.3.2		IDB
6	Transport of Stored Streams	Part 9 Section 8.2		IDB

Table A4-27 — Function P9CGB Information Representation for Compressed Graphics Bitmaps

#	Description	DAVIC Clause	Additional Implementation Information	Common with Contour
1	Compressed Graphics - Specifies the use of DVB subtitling and specifics how single bitmaps are coded.	Part 9 Section 6.12.2, 6.12.2.2		IDB
2	Types of Monomedia Components - Identifies Compressed Graphics as a stream or as a stand-alone Component	Part 9 Section 7.1	Support of Compressed Graphics as a stream is not a part of P9CGB	IDB
3	Transport of stand-alone Components	Part 9 Section 8, 8.3		IDB

A.4.4.3.3 Compressed Character Data Streams

DAVIC defines a format for compressed character data streams. These streams can be used as a stream which is played directly from the network and also as a stored stream which is played from memory under control of an application. The following tables: indicate the clauses from DAVIC Part 9 relevant to compressed character data streams graphics in the context of the *Enhanced Digital* Broadcast Contour for the functions identified above.

Copyright International Organization for Standardization
Provided by IHS under license with ISO
No reproduction or networking permitted without license from IHS Not for Resale

Table A4-28 — Function P9CCR Information Representation for Compressed Character Data Real-Time streams

#	Description	DAVIC Clause	Additional Implementation Information	Common with Contour
1	Compressed Character Data	Part 9 Section 6.13		IDB
2	Types of Monomedia Components – Identifies Compressed Character Data Graphics as a stream	Part 9 Section 7.1		IDB
3	Real-time and Stored Monomedia Streams - Identifies Compressed Character Data as an instance of both real-time and stored streams	Part 9 Section 7.2	Support of stored streams is not a part of P9CCR	IDB
4	Carriage of Monomedia Streams in PES Packets - Specifies that Compressed Graphics is carried in PES packets	Part 9 Section 7.3		IDB
5	Packetization of DAVIC-defined componetns	part 9 Section 7.3.2, Annex D		
6	Transport of Real-Time Streams	Part 9 Section 8.1		IDB

Table A4-29 — Function P9CCS Information Representation for Compressed Character stored streams

#	Description	DAVIC Clause	Additional Implementation Information	Common with Contour
1	Compressed Character Data	Part 9 Section 6.13		IDB
2	Types of Monomedia Components - Identifies Compressed Character Data Graphics as a stream	Part 9 Section 7.1		IDB
3	Real-time and Stored Monomedia Streams - Identifies Compressed Character Data as an instance of both real-time and stored streams	Part 9 Section 7.2	Support of real-time streams is not a part of P9CCS	IDB
4	Carriage of Monomedia Streams in PES Packets - Specifies that Compressed Graphics is carried in PES packets	Part 9 Section 7.3		IDB
5	Packetization of DAVIC-defined componetns	part 9 Section 7.3.2, Annex D		
6	Transport of Stored Streams	Part 9 Section 8.2		IDB

A.4.4.4 Linear Audio

Linear audio is intended as an alternative means to present audio information in addition and possibly simultaneous with the main audio channel. Applications include audible-feedback to user actions such as key presses, audible indication of a special situation (error condition, timed event).

Table A4-30 indicates the clauses from DAVIC Part 9 relevant to linear audio in the context of the *Enhanced Digital* Broadcast Contour.

 © ISO/IEC 1999 - All rights reserved

--`,,```,,,,````-`-`,,`,,`,`,,`---

Copyright International Organization for Standardization
Provided by IHS under license with ISO
No reproduction or networking permitted without license from IHS Not for Resale

Table A4-30 — Function P9LNAD: Information Representation for Stored Linear Audio streams

#	Description	DAVIC Clause	Additional Implementation Information	Common with Contour
1	Linear Audio - Specifies that Linear Audio is coded as AIFF-C	Part 9 Section 6.9		IDB
2	Types of Monomedia Components - Identifies Linear Audio as a monomedia component of the stream type	Part 9 Section 7.1		IDB
3	Real-time and Stored Monomedia Streams - Identifies linear audio as an instance of a stored stream	Part 9 Section 7.2		IDB
4	Carriage of Monomedia Streams in PES Packets - Specifies that Linear Audio is contained in PES packets	Part 9 Section 7.3		IDB
5	Packetization of DAVIC-defined Components	Part 9 Section 7.3.3		IDB
6	Transport of Stored Streams	Part 9 Section 8, 8.2		IDB
7	Coding of Linear Audio -Specifies the AIFF-C format	Annex B		IDB
8	Packetization of DAVIC defined Monomedia Components in PES packets - specifies details about how AIFF-C is contained in PES packets	Annex D		IDB

A.4.4.5 Text and Characters

DAVIC has selected a subset of the HTML 3.2 specification as a coding method for text with associated hyper links (corresponding to the MHEG-5 Hypertext Class anchor) . The coding of characters is based on Unicode to support multilingual text.

DAVIC has covered internationalization aspects by referencing work of the World Wide Web Consortium.

Detailed control of text presentation is provided by (Cascading) Style Sheets defined by the World Wide Web Consortium.

Table A4-31 indicates the clauses from DAVIC Part 9 relevant to text rendering issues in the context of the *Enhanced Digital* Broadcast Contour

Table A4-31 — Function P9TXT: Information Representation for Text and Characters

#	Description	DAVIC Clause	Additional Implementation Information	Common with Contour
1	Character Information - Specifies the use of Unicode	Part 9 Section 6.1		IDB
2	Text Information - Specifies the use of a subset of HTML 3.2 for text markup coding	Part 9 Section 6.2.x		IDB
3	Types of Monomedia Components - Identifies Text as a stand-alone component	Part 9 Section 7.1		IDB
3	Transport of stand-alone Components	Part 9 Section 8, 8.3		IDB

--`,,```,,,,````-`-`,,`,,`,`,,`---
Copyright International Organization for Standardization
Provided by IHS under license with ISO
No reproduction or networking permitted without license from IHS Not for Resale

A.4.4.6 Service Information

Service Information data forms part of the bitstream to provide the user with information to assist in the selection of services and/or events within the bitstream. DAVIC has selected ETSI ETS 300 468 (DVB) as its specification for the representation for Service Information. Table A4-32 indicates the clauses from DAVIC Part 9 relevant to text rendering issues in the context of the *Enhanced Digital* Broadcast Contour

Table A4-32 — Function P9SI: Information Representation for Service Information

#	Description	DAVIC Clause	Additional Implementation Information	Common with Contour
1	Service Information- Specifies the use of DVB-SI for the coding of Service Information	Part 9 Section 6.5		IDB

A.4.4.7 Content Loading

DAVIC has defined tools for Content Packaging. A Structure as well as Metadata has been defined. *Table A*4-33 indicates the clauses from DAVIC Part 9 relevant to text rendering issues in the context of the *Enhanced Digital* Broadcast Contour

Table A4-33 — Function P9CLND: Information Representation for Content Loading

#	Description	DAVIC Clause	Additional Implementation Information	Common with Contour
1	Content Packaging and Metadata - Introduction	Part 9 Section 11		IDB
2	Content Package Structure	Part 9 Section 11.1.x		IDB
3	Content Metadata	Part 9 Section 11.2.x		IDB

A.4.4.8 Application Format

Background Information:

Applications pose widely varying requirements to the Interactive Engine. Broadly speaking, two language styles are currently in active use and therefore included in the *Enhanced Digital* Broadcast Contour as is the case in DAVIC:

1. A functional/declarative style. A declarative language consists of a collection of high-level explicitly specified functional objects. The possible interactions between these functional objects are also explicitly defined. Applications take the form of a interconnected set of objects. The functional style lends itself naturally to the implementation of services requiring navigation within a collection of “pages” containing information. Due to the high-level nature of the interface and the fact that there is no direct access from within applications to the infrastructure of the receiver applications reliable and safe execution is easily achieved.
2. A procedural style (Script/byte-code). Not all services can be expressed in the functional/declarative style. Examples are services that rely on extensive data manipulation and/or direct access to the receiver’s infrastructure. In this case a procedural paradigm is more appropriate. This requires a so-called byte-code interface such as JAVA.

Specifications for an interactive engine supporting both styles are given in DAVIC Part 9 and are detailed below.

 © ISO/IEC 1999 - All rights reserved

Copyright International Organization for Standardization
Provided by IHS under license with ISO
No reproduction or networking permitted without license from IHS Not for Resale

MHEG-5 has been selected as the declarative engine this is specifically designed for TV-oriented navigation-like services. *Table A*4-34 indicates the clauses from DAVIC Part 9 and Part 5 relevant for the *Enhanced Digital* Broadcast Contour. This includes the mapping of MHEG-5 Elements to DSM-CC U-U which is the method used by the application to access its data either from the broadcast stream or from a point-to-point link (e.g., a telephone modem connection).

Table A4-34 — Function P9DAPP: Information Representation for Declarative Applications

#	Description	DAVIC Clause	Additional Implementation Information	Common with Contour
1	Application Interchange Format - Specifies the use of MHEG-5 for the coding of Declarative Applications	Part 9 Section 9.1	Only the first paragraph applies to the coding of Declarative Application	IDB
2	MHEG-5 profile for the DAVIC application domain - Specific details for the use of MHEG-5 in DAVIC	Part 9 Section 9.2.1, 9.2.2, 9.2.3, 9.2.4, 9.2.5, 9.2.6, 9.2.7, 9.2.8, 9.2.9, 9.2.10, 9.2.13		IDB
3	Mapping of MHEG-5 Elements to DSM-CC U-U - Specifies how MHEG-5 objects are retrieved using DSMCC	Part 9 Section 9.3.1, 9.3.2, 9.3.3, 9.3.4, 9.3.5		IDB
4	Reference Decoder Model- specifies the size and other relevant bounds to MHEG applications	Part 9 Section 10.1, 10.2, 10.3, 10.4		IDB
5	Run-time execution environment	Part 9 Section 9.6, 9.6.1	Implementation of the JAVA VM and packages is not part of P9DAPP	IDB
6	User Input Events Specifies how User Input (e.g., RC keys) is mapped onto application level events	Part 9 Section 9.6.2		IDB

MHEG-5 provides a mechanism, the InterchangedProgram Class, to execute procedural code from within a MHEG application. DAVIC has selected this procedural code to be JAVA VM. DAVIC has also specified a core set of JAVA APIs. *Table A*4-35 indicates the clauses from DAVIC Part 9 and MHEG-6 relevant for the *Enhanced Digital* Broadcast Contour.

Copyright International Organization for Standardization
Provided by IHS under license with ISO
No reproduction or networking permitted without license from IHS Not for Resale

Table A4-35 — Function P9PAPP: Information Representation for Procedural Applications

#	Description	DAVIC Clause	Additional Implementation Information	Common with Contour
1	Application Interchange Format - Specifies JAVA for the coding of procedural applications	Part 9 Section 9.1		IDB
2	Core set of Java APIs	Part 9 Section 9.4		IDB
3	java.lang - Minimal set of classes to run Java code	Part 9 Section 9.4.1		IDB
4	java.util - Utility features (strings, date handling, math)	Part 9 Section 9.4.2		IDB
5	java.io - access to non real time streams of data	Part 9 Section 9.4.3		IDB
6	iso.mheg5 - access to MHEG-5 objects	Part 9 Section 9.4.4		IDB
7	davic.dsmccuu -access to the DSMCC U-U interface for network data access	Part 9 Section 9.4.5	Support of this API is optional	IDB

A.4.4.9 Reference Decoder Model

DAVIC defines a Reference Decoding Model (RDM) which specifies semantic constraints on delivery, handling and decoding of content. The RDM does not describe any specific receiver architecture.

The RDM provides models for data delivery, memory usage for code and content objects and timing for object handling and instruction execution.

DAVIC application developers use the RDM as a virtual platform for application development and as the tool for verification of application correctness, without requiring any application testing at each specific STU implementation of the DAVIC specification.

*Table A*4-36 indicates the clauses from DAVIC Part 9 relevant to the reference decoding model in the context of the *Enhanced Digital* Broadcast Contour.

 © ISO/IEC 1999 - All rights reserved

Copyright International Organization for Standardization
Provided by IHS under license with ISO
No reproduction or networking permitted without license from IHS
Not for Resale

Table A4-36 — Function P9RDM Reference Decoder Model

#	Description	DAVIC Clause	Additional Implementation Information	Common with Contour
1	Scope - The RDM specifies semantic constraints on delivery, handling and decoding of content	Part 9 Section 10.1		IDB
2	Reference Decoding Model - Specification of the Reference Decoder Model	Part 9 Section 10.2		IDB
3	DAVIC Application Resource Descriptor - Descriptor which describes resources needed to execute a specific application on a receiver	Part 9 Section 10.3		IDB
4	Minimum DAVIC 1.2 STU requirements	Part 9 Section 10.4		IDB
5	Support for Graphics in STU	Part 9 Section 10.5		IDB
6	Persistent Memory	Part 9 Section 10.6		IDB

A.4.5 Security

DAVIC provides several kinds of tools for security. Two sets of tools deal with interfaces to detachable security devices. They are listed in *Table A*4-37 and *Table A*4-38 below. Also a set of tools, listed in *Table A*4-41 below, for the secure download (with respect to integrity, source and freshness of the information) of information to the STU has been defined.

Table A4-37 — Function P10CA0: Security Tool for Conditional Access based on PCCard Form Factor

#	Description	DAVIC Clause	Additional Implementation Information	Common with Contour
1	S1 Scrambling - Describes the methodology of rendering information unintelligible to prevent use of protected material by unauthorised individuals	Part 10 Section 10.1		IDB
2	Security Interfaces - describes the approach adopted by DAVIC to put the vital security elements of the SCS on detachable units which can be easily exchanged	Part 10 Section 9		IDB
3	Security Interface CA0 - Specifies the use of the DVB-CI as a DAVIC Security Interface (based on the PCCard FormFactor)	Part 10 Section 10 and Section 13		IDB

Copyright International Organization for Standardization
Provided by IHS under license with ISO
No reproduction or networking permitted without license from IHS Not for Resale

Table A4-38 — Function P10CA1: Security Tool for Conditional Access based on SmartCard

#	Description	DAVIC Clause	Additional Implementation Information	Common with Contour
1	S1 Scrambling - Describes the methodology of rendering information unintelligible to prevent use of protected material by unauthorised individuals	Part 10 Section 10.1		IDB
2	Security Interfaces - describes the approach adopted by DAVIC to put the vital security elements of the SCS on detachable units which can be easily exchanged	Part 10 Section 9		IDB
3	Security Interface CA1 - Specifies the DAVIC defined Security Interface CA1 (implemented on a ISO-7816) SmartCard	Part 10 Section 12.x		IDB

Table A4-39 — Function P10DL: Security Tool for Secure Download

#	Description	DAVIC Clause	Additional Implementation Information	Common with Contour
1	Secure Download - a mechanism for protecting software and data downloads to the STU. The integrity, source and freshness of the data is protected by this mechanism; however, confidentiality of the data is not provided.	Part 10 Section 7.6.x		IDB

 © ISO/IEC 1999 - All rights reserved

Copyright International Organization for Standardization
Provided by IHS under license with ISO
No reproduction or networking permitted without license from IHS Not for Resale

Annex B
(normative)
Interactive Digital Broadcast (IDB) Technology Domain

B.1 Scope

This Appendix specifies the Technology Domain of the Interactive Digital Broadcast (IDB) contour. Figure B-1 shows a system configuration implementing the IDB contour.

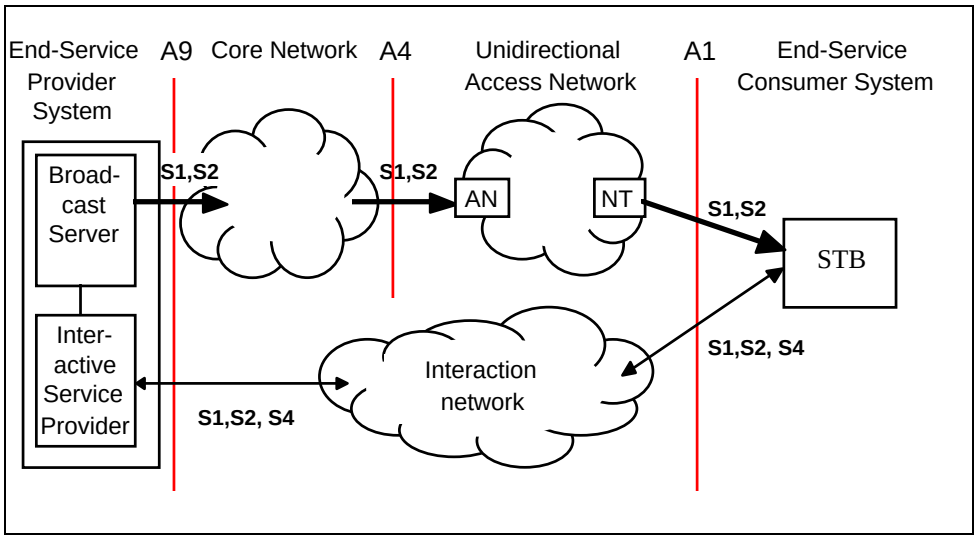

Figure B-1 — Configuration of Interactive Digital Broadcast System

B.2 Overview of system functions

Table B2-1, Table B2-2, Table B2-3, Table B2-4, Table B2-5 and Table B2-6 list the system functions relevant to the Interactive Digital Broadcast Contour. As described above, system functions are a collection of DAVIC clauses which together realize a complete system function. For each of the system functions it is indicated which DAVIC Clause implements the function, the Reference Point to which the function applies, the system location where the function is implemented and other system functions which shall be implemented if the function is implemented. An acronym is assigned to each function for further reference. This acronym is used in subclause B.4 of this Annex where detailed lists of DAVIC tools belonging to each function are given. Note that the functions defined in Table B2-5 and Table B2-6 are already sufficiently detailed so that these are not addressed in subclause B.4 of this Annex.

Note that these system functions have been defined on the basis of DAVIC 1.2 tools. Revisions of this technology contour may include new functions when suitable tools are identified according to the DAVIC Rules for technical procedure.

© ISO/IEC 1999 - All rights reserved

Copyright International Organization for Standardization
Provided by IHS under license with ISO
No reproduction or networking permitted without license from IHS
Not for Resale

Table B2-1 — Overview of System Functions for Interactive Digital Broadcast - High and Mid layer protocols

Acronym	Description	Standard Referenced	DAVIC Clause	Relevant Reference Point	System Location	Requires Function
P7URTS	High and Mid layer Protocols for unidirectional Real-Time Streams - MPEG-2 Transport Stream for Audio, Video and data Transmission	ISO/IEC 13818-1	Part 7, Sec 6	A9,A1	SPS, DS, SCS	P8PBUCX or P8PBUSL or P8PBUMD or P8PBULM
P7URTSE	Extension to P7URTS for Stream Events etc.	ISO/IEC 13818-1	Part 7, Sec 7	A9, A1	SPS, DS,SCS	P7URTS
P7UNRT	Mid- and High-layer protocols for unidirectional Non Real-Time Transmission	ISO/IEC 13818-6 ISO/IEC 13818-1	Part 7 Sec 6,7		SPS, DS,SCS	P8PBUCX or P8PBUSL or P8PBUMD or P8PBULM
P7BUCD	High and Mid Layer Protocols for bi-directional User Control data Transmission	ISO/IEC 13818-6 OMG-CDR OMG-UNO RFC 793 (TCP) RFC 791 (IP)	Part 7 Sec 7	A9, A1	SPS, DS,SCS,	P12SYSDYN and (P8LSSPS or P8LSSIS or P8LSPLM or P8PBBCX or P8PBBLM)
P7IPMP2	High and Mid Layer Protocols for IP over MPEG2 transmission	ISO/IEC 13818-6	Part 7 Sec 6	A9, A1	SPS, DS, SCS	P7BUCD
P7CNLD	High and Mid Layer Protocols for Content Loading	ISO/IEC 13818-6	Part 7 Sec 7	A10	SPS,DS	
P7A0	Protocols for interfacing a Network-Interface-Unit to a Set-Top-Unit	ISO/IEC 13818-1 ITU-T I.363.5 (AAL5)	Part 7 Sec 12	A0	SCS	P8A0EXT or P8A0INT
P7MPMMDP	Protocols for MPEG based services on the STU Multimedia Dataport	ISO/IEC 13818-1 IEC 61883	Part 7 Sec 13	A20	SCS	P8MMDP
P7IPMMDP	Protocols for IP based services on the STU Multimedia Dataport	RFC 793 (TCP) RFC 791 (IP)	Part 7 Sec 13	RP2	SCS	P8MMDP

 © ISO/IEC 1999 - All rights reserved

Copyright International Organization for Standardization
Provided by IHS under license with ISO
No reproduction or networking permitted without license from IHS Not for Resale

Table B2-2 — Overview of System Functions for Interactive Digital Broadcast - Lower Layer Protocols And Physical Interfaces

Acronym	Description	Standard Referenced	DAVIC Clause	Relevant Reference Point	System Location	Requires Function
P8PBUCX	Passband Unidirectional PHY on coax		Part 8 Sec 7.7	A9, A1	DS	
P8PBUSL	Passband Unidirectional PHY on Satellite	ETS 300 421	Part 8 Sec 7.9	A9, A1	DS	
P8PBUMD	Passband Unidirectional PHY on MMDS		Part 8 Sec 7.10	A9, A1	DS	
P8PBULM	Passband Unidirectional PHY on LMDS		Part 8 Sec 7.11	A9, A1	DS	
P8LSSPS	Low-Speed Symmetrical PHY on the PSTN	ITU-T V.22bis, V32, V.32bis, V.34	Part 8 Sec 7.1	A9, A1	DS	
P8LSSIS	Low-Speed Symmetrical PHY on the ISDN	ITU-T I.430	Part 8 Sec 7.2	A9, A1	DS	
P8LSPLM	Low-Speed Symmetrical PHY on Public Land Mobile Networks	ITU-T V.22, V.22bis, V32,	Part 8 Sec 7.3	A9, A1	DS	
P8PBBCX	Passband Bi-directional PHY on coax		Part 8 Sec 7.8	A9, A1	DS	P8PBUCX
P8PBBLM	Passband Bi-directional PHY on LMDS		Part 8 Sec 7.11	A9, A1	DS	P8PBULM
P8A0INT	Interface of Set-Top-Unit to Internal Network-Interface-Unit	UTOPIA Level 1 I^2C	Part 8 Section 8	A0	SCS	
P8A0EXT	Interface of Set-Top-Unit to External Network-Interface-Unit	IEEE 1394-1995	Part 8 Section 8	A0	SCS	
P8MMDP	STU Multimedia Dataport	IEEE 1394-1995	Part 8 Sec 9.2	A20	SCS	

Copyright International Organization for Standardization
Provided by IHS under license with ISO
No reproduction or networking permitted without license from IHS Not for Resale

Table B2-3 — Overview of System Functions for Interactive Digital Broadcast - Information Representation

Acronym	Description	Standard Referenced	DAVIC Clause	Relevant Reference Point	System Location	Requires Function
P9VIDMR	Information Representation for Real-Time compressed Video streams with a resolution up to ITU-R 601	ISO/IEC 13818-2	Part 9 Sec 6, 7, 8	A9,A1	SPS,SCS	P7URTS
P9VIDHR	Information Representation for Real-Time compressed Video streams with a resolution beyond ITU-R 601	ISO/IEC 13818-2	Part 9 Sec 6, 7, 8	A9,A1	SPS,SCS	P7URTS
P9VIDMS	Information Representation for Stored compressed Video streams with a resolution up to ITU-R 601	ISO/IEC 13818-2	Part 9 Sec 6, 7, 8	A9,A1	SPS,SCS	P9RDM and (P7UNRT or P7BUCD)
P9VIDHS	Information Representation for Stored compressed Video streams with a resolution beyond ITU-R 601	ISO/IEC 13818-2	Part 9 Sec 6, 7, 8	A9,A1	SPS,SCS	P9RDM and (P7UNRT or P7BUCD)
P9AUDMP1R	Information Representation for Real-Time compressed Audio streams using MPEG-1	ISO/IEC 11172-3	Part 9 Sec 6, 7, 8	A9,A1	SPS,SCS	P7URTS
P9AUDATR	Information Representation for Real-Time compressed Audio streams using ATSC A/52 Audio	ATSC A/52	Part 9 Sec 6, 7, 8	A9,A1	SPS,SCS	P7URTS
P9AUDMP1S	Information Representation for stored compressed Audio streams using MPEG-1	ISO/IEC 11172-3	Part 9 Sec 6, 7, 8	A9,A1	SPS,SCS	P9RDM and (P7UNRT or P7BUCD)
P9AUDATS	Information Representation for stored compressed Audio streams using ATSC A/52 Audio	ATSC A/52	Part 9 Sec 6, 7, 8	A9,A1	SPS,SCS	P9RDM and (P7UNRT or P7BUCD)
P9CGR	Information Representation for Compressed Graphics Real-Time streams	ETS 300 743	Part 9 Sec 6,7,8	A9,A1	SPS,SCS	P7URTS

 © ISO/IEC 1999 - All rights reserved

Copyright International Organization for Standardization
Provided by IHS under license with ISO
No reproduction or networking permitted without license from IHS Not for Resale

P9CGS	Information Representation for Compressed Graphics Stored streams	ETS 300 743	Part 9 Sec 6,7,8	A9,A1	SPS,SCS	P9RDM and (P7UNRT or P7BUCD)
P9CGB	Information Representation for Graphics Bitmaps	ETS 300 743	Part 9 Sec 6,7,8	A9,A1	SPS,SCS	P9RDM and (P7UNRT or P7BUCD)
P9SPICR	Information Representation for real-time streams of Still Pictures	ISO/IEC 13818-2	Part 9 Sec 6, 7, 8	A9,A1	SPS,SCS	P7URTS
P9SPICS	Information Representation for stored streams of Still Pictures	ISO/IEC 13818-2	Part 9 Sec 6, 7, 8	A9,A1	SPS,SCS	P9RDM and P7URTS and (P7UNRT or P7BUCD)
P9SPB	Information Representation for Still Picture bitmaps	ISO/IEC 13818-2	Part 9 Sec 6, 7,8	A9,A1	SPS,SCS	P9RDM and (P7UNRT or P7BUCD)
P9CCR	Information representation for Real-Time streams of Compressed Character Data		Part 9 Sec 6, 7, 8	A9, A1	SPS,SCS	P7URTS
P9CCS	Information representation for Stored streams of Compressed Character Data		Part 9 Sec 6, 7, 8	A9, A1	SPS,SCS	P9RDM and (P7UNRT or P7BUCD)
P9LNAD	Information Representation for stored Linear Audio streams	AIFF-C	Part 9 Sec 6, 7, 8, A, C	A9,A1	SPS,SCS	P9RDM and P7URTS and (P7UNRT or P7BUCD)
P9TXT	Information Representation for Text and Characters	ISO 10646-1 HTML 3.2	Part 9 Sec 6, 7, 8	A9,A1	SPS,SCS	P9RDM and (P7UNRT or P7BUCD)
P9SI	Information Representation for Service Information	ETS 300 468	Part 9 Sec 6	A9,A1	SPS,SCS	P7UNRT
P9CNLD	Information Representation for Content Loading		Part 9 Sec 11	A10	SPS	P7CNLD
P9DAPP	Information Representation for Declarative Applications	ISO/IEC 13522-5	Part 5, Part 9 Sec 9, 10	A1, A9	SPS, SCSS	P9RDM and (P7UNRT or P7BUCD)
P9PAPP	Information Representation for Procedural Applications	ISO/IEC 13522-6 JAVA VM	Part 9 Sec 9, 10	A1, A9	SPS, SCSS	P9DAPP
P9RDM	Reference Decoder Model		Part 9 Section 10	A1, A9	SPS, SCSS	

Copyright International Organization for Standardization
Provided by IHS under license with ISO
No reproduction or networking permitted without license from IHS Not for Resale

Table B2-4 — Overview of System Functions for Interactive Digital Broadcast - Security

Acronym	Description	Standard Referenced	DAVIC Clause	Relevant Reference Point	System Location	Requires Function
P10CA0	Security Tools: Interface for Conditional Access based on PCCard Form Factor	CENELEC EN 50221	Part10 Sec 9, 10, 9, 13	CA0/CA1	SPS,DS, SPS	
P10CA1	Security Tools: Interface for Conditional Access based on Smart Card	ISO/IEC 7816-1, 2, 3, 4, 5, 6	Part10 Sec 10, 9, 12	CA0/CA1	SPS,DS, SPS	
P10AUT	Security Tools: Authentication	X.509 X.511	Part 10 Sec 7	A1,A9	DS,SCSPS	P7BUCD
P10DL	Security Tools: Secure Download	ISO/IEC 13818-6	Part 10 Sec 7	A1, A9	DC, SC, SPS	P7UNRT or P7BUCD

Table B2-5 — Overview of System Functions for Interactive Digital Broadcast - Usage Data

Acronym	Description	DAVIC Clause	Relevant Reference Point	System Location	Requires Function
P11UDCSNMP	Usage Data Collection Interface Based on SNMP	Part 11 Section 9.1.1	A1, A9	SPS, SCS	P7BUCD
P11UDCCMIP	Usage Data Collection Interface based on CMIP	Part 11 Section 9.1.2	A1, A9	SPS, SCS	P7BUCD
P11UDITI	Interactive Usage Data Transfer Interface	Part 11 Section 10.1			P11UDCSNMP or P11UDCCMIP
P11UDBTI	Bulk Usage Data Transfer Interface	Part 11 Section 10.2			P11UDDSNMP or P11UDDCMIP

Table B2-6 — Overview of System Functions for Interactive Digital Broadcast - System Dynamic Modelling

Acronym	Description	DAVIC Clause	Relevant Reference Point	System Location	Requires Function
P12SYSDYN	DAVIC System Dynamic Modelling for Interactive Broadcast (PSTN/ISDN Return channel)	Part12 Section 9.4	A1, A9	SPS,DS, SPS	

Note 1: Some detailed aspects of some tools identified are further qualified to be optional in the following tables. Implementations may elect not to implement these aspects.

 © ISO/IEC 1999 - All rights reserved

--`,,```,,,,````-`-`,,`,,`,`,,`---

Copyright International Organization for Standardization
Provided by IHS under license with ISO
No reproduction or networking permitted without license from IHS Not for Resale

B.3 Cross Reference between System Requirements and System Functions

Systems Requirements which may be supported in future revisions of DAVIC specifications, if appropriate tools are available, are indicated by TBD (To Be Determined). They are included here to indicate perceived gaps in technology relative to the Contours defined in ISO/IEC TR 16501.

Table B3-1 — Cross Reference between System Requirement and System Functions

Ref.	Description	Technology Domain
	CONTENT LOADING FUNCTIONS	
1.01	The system must support the delivery of content material from the Content Provider to the Service Provider via physical media.	TBD
1.02	The system must support the delivery of content material from the Content Provider to Service Provider via an electronic link.	TBD
1.05	The system must support the delivery of content from the Content Provider to Service Provider as separate, distinguishable content item elements.	P9CNLD
1.06	Content item elements on the Service Provider's system may be replaced with new versions.	P7CNLD
1.08	Content item elements from a variety of content items may be packaged together and carried as one package from the Content Provider to the Service Provider.	P9CNLD
1.15	The Service Provider must be able to authenticate the identity of the Content Provider.	P10AUT
1.16	Transfer of material between a Content Provider and Service Provider should have the possibility of being secure, using encryption or other techniques.	TBD
1.20	The system must support the delivery of content material in real-time from the Content Provider, through the Service Provider to the End User.	TBD
1.22	The flow of content material in real-time may be initiated by the Service Provider or User.	P7CNLD
1.23	It must be possible for a Content Provider to automatically load content item elements into a Service Provider's system.	P7CNLD
1.26	It must be possible for Content Management Data stored on the Service Provider's system to grant or deny User access to content material.	P7CNLD
1.27	It must be possible for Content Management Data stored on the Service Provider's system to employ embargo dates/times to deny and grant access to content material.	P9CNLD
1.28	It must be possible for Content Management Data stored on the Service Provider's system to cause the content to be automatically deleted at a prescribed date and time.	P9CNLD
1.29	It must be possible for embargo and deletion dates/times to be set differently in different areas.	P9CNLD
1.30	It must be possible for Content Management Data to include copyright information.	P9CNLD
1.31	It must be possible for Content Management Data to include the rights to alter the material.	P9CNLD
1.32	It must be possible for Content Management Data to include the rights to distribute the material.	P9CNLD
1.33	It must be possible for Content Management Data to include an extensible set of features (e.g.. price, number of plays and ownership).	P9CNLD
1.34	One or more content item elements must be able to carry Navigation Data, enabling End Users to locate content.	P9CNLD
1.35	It must be possible for Content Navigation Data to carry a content label for unique identification of the content item.	P9CNLD

© ISO/IEC 1999 - All rights reserved

Copyright International Organization for Standardization
Provided by IHS under license with ISO
No reproduction or networking permitted without license from IHS
Not for Resale

Ref.	Description	Technology Domain
1.36	It must be possible for Content Navigation Data to include an extensible set of features (e.g., title, rating, synopsis, producer, length, price, "attractors" like stars etc., presentation format and Content Provider name).	P9CNLD
1.37	The STU must be able to decode at least MPEG-2 TS MP @ ML	P9VIDMR
1.38	Display normal and wide screen material on either normal or wide screen displays	P9VIDMR
1.39	The STU must be able to decode and display 4:3 and 16:9 formats	P9VIDMR
1.41	The Content Management System must retain all appropriate information for respecting Intellectual Property Rights..	P9CNLD
	BIT TRANSPORT FUNCTIONS	
2.01	The system should provide connection from the Service Provider to the STU at a specified bit-rate.	P7URTS
2.02	The system should provide transmission means from the STU to the Service Provider at a specified bit-rate.	P7BUCD
2.03	The system should enable transmission of bit-stream from the Service Provider to a single STU destination (Unicasting).	(P7URTS AND (P10CA0 OR P10CA1)) OR P7BUCD
2.04	The system should enable simultaneous transmission of bit-stream from Service Provider to selected multiple STU destinations (Multicasting).	P7URTS AND (P10CA0 OR P10CA1)
2.05	The system should enable simultaneous transmission of bit-stream from Service Provider to all STU destinations (Broadcasting).	P7URTS
2.06	The system should provide a return channel from each STU to the Service Provider.	P7BUCD
2.07	The system should provide a broadcast control channel from the Service Provider to all STUs.	P7UNRT
2.09	The system should provide a dedicated control channel from the Service Provider to each STU.	P7BUCD
2.10	The system should enable the transportation of application program code from the Service Provider to the STU.	P7UNRT
2.11	The system should enable the transportation of programme content (audio, video, text, graphics etc.) and data from the Service Provider to the STU.	P7URTS or PUNRT
2.12	The system should enable the transportation of programme service information (Station Identification, descriptive material about programme content etc.)	P7UNRT
2.13	The transport link should provide error -resilience.	P7UNRT
2.20	Support the transport of multi-lingual audio	P7URTS or P7UNRT
	NETWORK MANAGEMENT FUNCTIONS	
3.01	The system should facilitate the Operation, Administration, Maintenance & Provisioning functions required by Network Providers.	P10CA0 or P10CA1
3.02	The system should signal faults and failures to Service Providers and Network Providers, and facilitate rapid recovery under such failure conditions.	TBD
	SESSION FUNCTIONS	
	General	
4.01	The Service Provider should be able to download information to allow the STU to locate material carried on a variety of media (including satellite, terrestrial and cable delivery).	P9SI
4.04	Each application should be able to establish a communications session.	P9DAPP
4.08	The application should be able to terminate a session in an orderly fashion.	P9DAPP

 © ISO/IEC 1999 - All rights reserved

Copyright International Organization for Standardization
Provided by IHS under license with ISO
No reproduction or networking permitted without license from IHS
Not for Resale

Ref.	Description	Technology Domain
4.09	The application should be able to reserve a session in advance.	P9DAPP
4.11	The application should be able to provide information to the user about the reserved program timeslot, and to provide control and warning signals when required.	P9DAPP
4.12	The application should be able to provide a range of choices of audio, video, textual and graphical quality and definition.	P9DAPP and (P9VIDMR or PDVIDHR or P9VIDMS or P9VIDHS or P9AUDMP1R or P9AUDATR or P9AUDMP1S or P9AUDATS or P9CGR or P9CGS OR P9CGB or P9SPICR OR P9SPICS or P9SPB or P9LNAD or P9TXT or PGCCR or P9CCS)
4.13	An application should be able to dynamically change the quality of audio, video, text and graphics of an existing session during operation.	System Functions listed for 4.12
4.14	A user should be able to request an application to change the quality of audio, video, text and graphics of an existing session during operation.	System Functions listed for 4.12
	Session types	
4.16	A user should be able to suspend an active session.	P9DAPP
4.17	A user should be able to resume a suspended session.	P9DAPP
4.18	A user should be able to start another session during suspension of a current session (e.g.. to use a navigation facility to access different programme content or to run other applications).	P9DAPP
4.19	A user should be able to cancel a suspended session.	P9DAPP
4.20	It should be possible for a suspended session to be cancelled automatically after a timeout.	P9DAPP
	Content aspects of sessions	

Copyright International Organization for Standardization
Provided by IHS under license with ISO
No reproduction or networking permitted without license from IHS Not for Resale

Ref.	Description	Technology Domain
4.24	The system should be able to encode content material.	P9VIDMR OR P9VIDMR OR PDVIDHR OR P9VIDMS OR P9VIDHS OR P9AUDMP1R OR P9AUDATR OR P9AUDMP1S OR P9AUDATS OR P9CGR OR P9CGS OR P9CGB OR P9SPICR OR P9SPICS OR P9SPB OR P9LNAD OR P9TXT or PGCCR or P9CCS
4.25	The STU should be able to decode content material.	System functions listed per 4.24
4.28	The system should be able to transfer audio-visual clip material.	P9VIDMS OR P9VIDHS OR P9AUDMP1S OR P9AUDATS
4.29	The system should be able to transfer still picture material.	P9SPICR OR P9SPICS OR P9SPB
4.30	The system should be able to transfer a text description of audio-visual material.	P9TXT OR P9SI
4.32	The system should be able to transfer multi-channel audio material	P9AUDATR OR P9AUDATS
4.33	The system should be able to transfer text material	P9TXT or PGCCR or P9CCS
4.34	The system should be able to transfer motion audio-video material	((P9VIDMR OR PDVIDHR) AND (P9AUDMP1R OR P9AUDATR)) OR ((P9VIDMS OR P9VIDHS) AND (P9AUDMP1S OR P9AUDATS))
4.35	The system should be able to transfer graphics material	P9CGR OR P9CGS OR P9CGB
4.36	The system should be able to transfer monophonic audio material	P9AUDMP1S OR P9AUMP1S

 © ISO/IEC 1999 - All rights reserved

--`,,```,,,,````-`-`,,`,,`,`,,`---

Copyright International Organization for Standardization
Provided by IHS under license with ISO
No reproduction or networking permitted without license from IHS Not for Resale

Ref.	Description	Technology Domain
4.37	The system should be able to transfer stereophonic audio material	P9AUDMP1S OR P9AUMP1S
4.38	Provide data carousel functionality	P7UNRT
	ACCESS CONTROL FUNCTIONS	
	General	
5.03	The system should provide effective, yet unobtrusive means to prevent unauthorised access to the network.	P10CA0 OR P10CA1 OR P10AUT
5.04	The system should provide means to prevent unauthorised access to Service Provider by STUs.	P10AUT
5.05	The system should provide means to prevent unauthorised access to the STU.	P9DAPP
5.06	The system should provide means to prevent unauthorised access to Service Provider by Content Providers.	P9DAPP
5.07	The system should provide means to limit access to certain content and applications on the Server.	P10CA0 OR P10CA1
5.08	The system should provide means to prevent unwanted material from being sent to a user.	P10CA0 OR P10CA1
5.09	The system should provide means to protect against viruses etc.	P9DAPP
5.10	A Service Provider should be able to dynamically authorise or deny access to services according to contract with customer.	P10CA0 OR P10CA1
5.11	A system needs to provide means to authenticate the identity of Service Provider.	P10AUT
5.12	A Service Provider needs to be able to authenticate the identity of the user.	P10AUT
5.13	A Service Provider needs to be able to utilise a user's identity to select a particular User Profile.	P9DAPP
5.14	The system should provide the means by which a customer account may apply to several users, each to be separately identified with a different service level (for example parents / children).	P10CA0 OR P10CA1
5.15	Each customer account may apply to several users, each to be separately identified with a different User Profile (covering preferences, shoe sizes etc.).	P9DAPP
5.18	The system should support and control conditional access services.	P10CA0 OR P10CA1
5.19	The account owner should have the ability to control access to material by subsidiary users of the same account.	P10CA0 OR P10CA1
5.20	users should be able to control access to certain applications and content.	P10CA0 OR P10CA1
5.21	The system should provide means for the Service Provider to control access services according to credit status and payment history (or customer characteristics).	P10CA0 OR P10CA1
5.23	The system should enable access control limits to be dynamic (for example peak/off peak hours)	P9DAPP
5.24	The system should facilitate the non-repudiation of downloaded data.	P9DAPP
	IPR aspects	
5.25	The system should provide means to control access to copyright material (applications, programme content etc.).	P10CA0 OR P10CA1
5.26	The system should provide means to generate records of usage of copyright material to facilitate payment.	P10CA0 OR P10CA1
5.28	The system should include mechanisms to prohibit copies of material being made if not authorised.	P7URTS

Copyright International Organization for Standardization
Provided by IHS under license with ISO
No reproduction or networking permitted without license from IHS Not for Resale

Ref.	Description	Technology Domain
5.29	The Service Provider should be able to control access to material in given geographical areas (e.g., local football match not available in real time to area from which spectators will be drawn).	P10CA0 OR P10CA1
	Authorisation	
5.30	The system should provide means to enable the user to authorise the supply of Service Provider-delivered services (applications, VoD etc.).	P9DAPP
5.31	The system should provide means to enable a user to authorise the supply of goods and services.	P9DAPP
5.32	The system should provide means to enable a user to authorise payment of goods and services.	P9DAPP
5.33	The system should provide means to enable a user to arrange for delivery of goods and services (not necessarily to user's address).	P9DAPP
5.34	The system should provide a secure validation system for financial transactions (such as the transmission, reception, validation and transfer to third-parties of electronic signatures).	P10AUT
5.35	Provide means for user to acquire rights to access-limited content	P10CA0 OR P10CA1
5.36	The system should allow secure access to customer databases at service provider premises	TBD
5.37	The system should allow secure access to user profile data	P10CA0 OR P10CA1
5.38	The system should provide means to prevent unwanted material from being received by the user.	P10CA0 OR P10CA1
	NAVIGATION FUNCTIONS	
	General	
6.01	Set-top units should offer a start-up function to allow user to make initial choice of service or application.	P9DAPP
6.02	Set-top units should offer other menus as a result of subsequent user command or system response.	P9DAPP
6.03	The system should offer equally easy access to the full range of available Service Providers.	P9DAPP
6.04	The system should permit a Service Provider to present a range of services and products to the user.	P9DAPP
6.05	The system should permit the user to create and maintain a list of favourite places (Services Providers and Services frequently used).	P9DAPP OR P9PAPP
6.06	The user should be able to find/choose/select an application using a navigation system.	P9DAPP OR P9PAPP
6.07	The user should be able to find/choose/select a content item using a navigation system.	P9DAPP OR P9PAPP
6.08	The user should be able to find/choose/select a product/service using a navigation system.	P9DAPP OR P9PAPP
6.09	Navigation systems should permit Service Providers to identify the commercial conditions (cost etc.) of applications delivery to users.	P9DAPP
6.10	Navigation systems should permit Service Providers to identify the commercial conditions (cost etc.) of content delivery to users.	P9DAPP
6.11	Navigation systems should permit Service Providers to identify the commercial conditions (cost etc.) of product/service delivery to users.	P9DAPP
6.12	Navigation system should permit the prices of a given application, content item, product or service to vary with time.	P9DAPP

 © ISO/IEC 1999 - All rights reserved

Copyright International Organization for Standardization
Provided by IHS under license with ISO
No reproduction or networking permitted without license from IHS Not for Resale

Ref.	Description	Technology Domain
6.13	Navigation systems should permit the user to select the language used for presentation of menus, functions and options.	P9DAPP
6.14	Navigation systems should offer each Service Provider the opportunity to create an individual "look and feel" to the services.	P9DAPP
6.15	Navigation systems should offer the user a set of consistent or obvious controls and tools in order to facilitate easy operation and migration.	P9DAPP
6.16	Navigation systems should be able to display a single screen image which comprises a "mosaic" of still or moving pictures.	P9DAPP
6.17	Navigation systems should be able to display a multitude of independent image objects as a "mosaic" of still or moving pictures.	P9DAPP
6.18	Navigation systems should be able to display options for selection as a menu of textual items.	P9DAPP
6.19	Navigation systems should be able to recognise that a selection has been made, and which item from the available options has been selected.	P9DAPP
6.20	Navigation systems should be able to trigger the launch of the selected item.	P9DAPP
6.21	Navigation systems should be able to employ intelligent agents to optimise the choices presented to the user.	P9SI
6.21.1	Navigation system must only present material available for viewing (e.g., respect regional blackouts)	P9SI
	AV programme aspects	
6.24	The system should enable the use of Electronic Programme Guides to plan programme content selection.	P9SI
6.25	The system should permit personally tailored Electronic Guides to be produced and used.	P9SI AND P9PAPP
6.26	The system should permit the user to select a content element for immediate consumption using an Electronic Programme Guide.	P9SI
6.27	The system should permit the user to select a content element for future consumption using an Electronic Programme Guide.	P9SI
6.28	Electronic Programme Guides may be user driven by date/ time/ source/ programme type etc.	P9SI
6.29	Electronic Programme Guides may present information as text, graphics, audio or video.	P9SI AND (P9DAPP OR P9PAPP)
6.30	Electronic Programme Guides should support the categorisation of material by programme-type (e.g., Sports).	P9SI
6.31	Electronic Programme Guides should support the inclusion of additional information (e.g., cast lists).	P9SI AND (P9DAPP OR P9PAPP)
6.32	The system should include means to allow Content Providers to supply information to support Electronic Programme Guides.	P9SI
6.33	Electronic Programme Guides should permit content presentation format and resolution to be described.	P9SI
6.34	Electronic Programme Guides should permit the use of a customised filter to prevent display of unwanted material.	P9SI
6.35	Electronic Programme Guides should permit users to select content material by rating.	P9SI
6.36	The system should permit a user to review the available combinations of delivery dates/times and prices.	P9SI AND (P9DAPP OR P9PAPP)
6.37	The system should permit a user to review the available combinations of presentation format/resolution and prices.	P9SI AND (P9DAPP OR P9PAPP)

Copyright International Organization for Standardization
Provided by IHS under license with ISO
No reproduction or networking permitted without license from IHS Not for Resale

Ref.	Description	Technology Domain
6.38	The system should enable a Service Provider to be able to display the time interval between consecutive copies of content (e.g., for NVoD).	P9SI
6.39	The system should enable a user to review lists of content items booked in advance.	P9SI AND (P9DAPP OR P9PAPP)
6.40	The system should enable a user to cancel a content element item booked in advance.	P9SI AND (P9DAPP OR P9PAPP)
6.43	The system should permit the user to browse through any audio-visual clips.	P9DAPP + functions identified for requirement 4.28
6.44	The system, when NVoD content viewing has been paused, should enable the display of the time remaining before viewing may recommence.	P9DAPP
6.45	The system should facilitate the display of lists on multiple pages.	P9DAPP
6.46	85% of the users must be able to use 75% of the user terminal functions within 2 minutes without reading an instruction manual	No specific DAVIC tool required
6.47	The system should permit the use of Electronic Programme Guides for current and future events.	P9SI
	APPLICATION LAUNCH	
	General	
7.01	The system should support applications which run on the STU, the Service Provider, or both.	P9DAPP
7.02	The system should provide the means to transfer data (executable code, files etc.) to ancillary equipment connected to the STU (Computer, Printer, Games Machine etc.).	P7MPMMDP
7.03	The system should provide the means to select and download platform-independent application programs to the STU.	P9DAPP OR P9PAPP
7.04	The system should provide the means to select and download platform-independent application programs to the STU (e.g., Java classes)	P9DAPP OR P9PAPP
7.05	The system should provide the means to select and download platform-dependent application programs (outside the scope of DAVIC) to the STU.	P9DAPP
7.06	The system should enable an STU-specific application program (outside the scope of DAVIC) to be launched on the STU.	P9DAPP
7.07	The system should enable the STU to automatically identify and preload channels and services available on cable, satellite and terrestrial networks.	P9SI
	MEDIA SYNCHRONISATION LINK FUNCTIONS	
8.01	The system should enable media components which may be delivered and stored separately to be presented in a synchronised manner.	P9DAPP AND P7URTSE
8.02	The system should enable text and graphics to be scrolled on the screen within a defined window size.	P9DAPP
8.03	The system should enable text and graphics windows to be repositioned during the programme.	P9DAPP
8.04	The system should enable text and graphics displays to be transparent or coloured as defined by the programme content.	P9DAPP
8.05	The system should provide the means to cue user activity (e.g., a moving cursor, a bouncing ball, or a moving colour change).	P9DAPP

 © ISO/IEC 1999 - All rights reserved

Copyright International Organization for Standardization
Provided by IHS under license with ISO
No reproduction or networking permitted without license from IHS Not for Resale

Ref.	Description	Technology Domain
8.06	The system should enable the transfer and subsequent synchronisation of media components.	P9DAPP
8.07	The system should permit insertion points to be defined within content to enable sequential media components to be synchronised (e.g., advertisements).	P9DAPP AND P7URTSE
8.08	The system should enable the sequential components inserted at the synchronisation points to change.	P9DAPP AND P7URTSE
8.09	The system should enable one application to launch another (e.g., advertisements providing links to Home Shopping).	P9DAPP
8.10	The system should provide the means by which users may be linked in real time to a general broadcast message.	P9DAPP
8.11	The system should allow linkages to general broadcast messages to be regionally focused.	P9DAPP
	APPLICATION CONTROL FUNCTIONS	
9.01	A user should be given visual/audio feedback within 250ms whenever an application control function is utilised.	P9DAPP
9.02	The STU should provide at least a defined set of user-activated command "keys" (e.g., on a remote control, keyboard etc.).	P9DAPP
9.03	The STU should provide direct selection of any "broadcast" channel within 300ms.	P9DAPP
	Functions operating on Linear Material	
9.04	The user should be able to start and stop the presentation of the material.	P9DAPP
9.05	The user should be able to pause (with frame freeze) and resume the presentation of the material.	P9DAPP
	Programme presentation functions for linear material.	
9.13	The user should be able to choose the language for the audio presentation from those available.	P9SI
9.14	The user should be able to choose whether the material is presented with subtitles overlaid on the picture.	P9CGR OR P9CGS
9.15	The user should be able to choose the language for the presentation of subtitles and other text from those available.	P9SI
9.16	The system should be able to present additional overlaid text/graphics, either application demanded or user-selected (e.g., optional supplementary information for the hearing impaired or lyrics for Karaoke-on-Demand).	P9DAPP
9.17	The STU should present the user with options for presentation for subtitles, text and graphics (e.g., position, font, size and style).	P9DAPP
	Indexing functions	
	Parallel Stream material	
9.21	The system should enable the use of content material comprised of linked objects, in which one object may link to two or more objects (e.g., sad/happy ending to a movie).	P9DAPP and P7URTSE
9.22	The system should allow the end-user to select the link utilised at a decision point.	P9DAPP and P7URTSE
9.23	The system should enable the use of multiple related parallel broadcast streams, offering the user the ability to select between these streams.	P9DAPP
9.26	Provide the ability to synchronize STU applications with the audio/video stream	P9DAPP and P7URTSE
	PRESENTATION CONTROL FUNCTIONS	

Copyright International Organization for Standardization
Provided by IHS under license with ISO
No reproduction or networking permitted without license from IHS Not for Resale

Ref.	Description	Technology Domain
10.01	A user should be given visual/audio feedback within 250ms whenever a presentation control function is utilised.	P9DAPP
10.02	The system should permit the user to make hard copy from the application, subject to copyright controls.	P7URTS
10.03	The receiving site will contain an appropriate user interaction device able to invoke all functionality	P9DAPP
10.04	Display normal and widescreen material on either normal or widescreen displays	P9VIDMR or P9VIDHR or P9VIDMS or P9VIDHs
	USAGE DATA FUNCTIONS	
11.01	The system should provide a standard interface to external agencies and systems to permit access to usage data for Billing, Service Monitoring and Royalty purposes.	P11UDITI and/or P11UDBTI
11.03	The system should record use of network, Server and content resources.	P11UDITI and/or P11UDBTI
11.04	The system should be able to track use by different users within one customer account (e.g., parents/children).	P10CA0 OR P10CA1
11.06	The system should be able to track the use of Copyright (IPR) material.	P10CA0 OR P10CA1
	Real-time pricing functions	
11.07	The system should enable Service Providers to offer flexible charging structures to individual users.	P10CA0 OR P10CA1
11.08	The system should enable a user to be advised of the duration of free viewing time before charging starts.	P10CA0 OR P10CA1
11.09	The system should enable users to cancel viewing within free time, and to precept default action at end of free time.	P10CA0 OR P10CA1
11.10	The user should be able to see the cost of current or just-finished transaction or service.	P10CA0 OR P10CA1
11.11	The system should enable the user to be able to obtain information on the up-to-date credit limit and bill liabilities.	P10CA0 OR P10CA1
11.12	The system should allow a Service Provider to obtain information on bill liabilities.	P10CA0 OR P10CA1
	USER PROFILE FUNCTIONS	
12.01	The system should enable the creation of personal profiles for user(s) which record preferences (e.g., shoe size for applications such as teleshopping).	P9DAPP
12.02	The system should support portable user profiles (e.g., smart card or central database)..	TBD
	SECURITY FUNCTIONS	
13.01	The reporting of distribution and usage data, must be protected	P10CA0 OR P10CA1
13.02	Security measures applied to content should not negatively impact the delivered quality of the content	P10CA0 OR P10CA1
13.03	Reporting of distribution and usage data must be Auditable	P10CA0 OR P10CA1
13.04	All copies (authorised and unauthorised) of content must be traceable	P7URTS

 © ISO/IEC 1999 - All rights reserved

Copyright International Organization for Standardization
Provided by IHS under license with ISO
No reproduction or networking permitted without license from IHS
Not for Resale

Ref.	Description	Technology Domain
13.05	All instances of delivery should be securely reported, with minimal loss	P10CA0 OR P10CA1
13.06	IPR tracking should be supported at the elemental level (picture, audio, piece of picture or audio)	P7URTS
13.07	The availability of the clear digital stream is controllable by the system	P7URTS
13.10	Usage data must be secure	P10CA0 or P10CA1
13.11	The system must support a hierarchical security approach, such that .a security failure may translate into loss of e.g., 1 frame, 5 minutes, or a large amount	P10CA0 OR P10CA1
13.12	Security measures should not significantly increases latency for e.g., channel up/down	P10CA0 OR P10CA1
13.13	Security should not require multiple formats and/or versions of content for distribution	P7URTS
13.14	Meta-data should be subject to the same level of security as audio and video content	P10CA0 OR P10CA1
13.15	The system must support Regional blackout	P10CA0 OR P10CA1
13.16	The system should support a degraded digital stream output capability for recording	P10CA0
13.17	Unauthorised intrusion should not compromise end-to-end security	P10CA0 OR P10CA1
13.18	Security management should not be complex	P10CA0 OR P10CA1
13.19	All cases of entity authentication must be traceable and auditable	P10CA0 OR P10CA1
13.20	The system should support Irrefutability and non-repudiation functions such that they are usable as legal proof	P10CA0 OR P10CA1
13.21	Data to and from the DAVIC system should be protected such that it is secure and private within the DAVIC system	P10CA0 OR P10CA1
13.22	Upgrades to security elements in face of a breach should be easy and quick	P10CA0 OR P10CA1
13.23	Delivery in the face of security failure may be allowed by the Service Provider	P10CA0 OR P10CA1
13.24	The system must support secure download of software	P10DL
13.25	Source of security related problems should be readily determinable	P10CA0 OR P10CA1
13.26	Security processes will not impose significant overheads on the DVIC system performance	P10CA0 OR P10CA1
13.27	Security processes should not cause non-delivery of authorised media	P10CA0 OR P10CA1
13.28	Security processes should be transparent to running (operating) of network	P10CA0 OR P10CA1
13.29	Unauthorised intrusion should not compromise end-to-end security	P10CA0 OR P10CA1
13.30	Multiple scramble/descramble processes are allowed	P10CA0
13.31	Scrambling for network security reasons should be allowed	No specific tool required
13.32	Access to the Network must be controllable	P9DAPP
13.33	Media delivery should be controllable based on e.g., rating, time of day, user, etc.	P10CA0 OR P10CA1
13.34	Purchases should be controllable based on e.g., user, credit, existing billings, etc.	P9DAPP
13.35	All transactions must be secure	P10AUT

--`,,```,,,,````-`-`,,`,,`,`,,`---
Copyright International Organization for Standardization
Provided by IHS under license with ISO
No reproduction or networking permitted without license from IHS Not for Resale

Ref.	Description	Technology Domain
13.36	Access to profile data must be controllable by user	P9DAPP
13.37	Usage data should be anonymous for statistical analyses	No tool required
13.38	Individual user data will be secure	P11UDCSNMP or P11UDCCMIP
13.40	The system will support both subscriber and user authentication	P10AUT
13.41	Usage Data reporting must be accurate, auditable	P11UDCSNMIP or P11UDCCMIP
13.42	All equipment must allow testing under secure environments for all features (including clear digital stream)	No specific DAVIC tool required
13.43	Inclusion of security features must still allow for export	P10CA0 OR P10CA1
13.44	Security should not significantly increase complexity	P10CA0 OR P10CA1
13.45	Manufacturing must minimise requirements for secure facilities	P10CA0 OR P10CA1
13.46	Access to data limited to authorised users only	P10CA0 OR P10CA1
13.47	The two-way Usage Data interface must be secure	P11UDCSNMP or P11UDCCMIP
13.49	The DAVIC system must support authentication to and from external support systems	P10AUT
13.51	The system must support identification of consumed material	P10CA0 or P10CA1
13.52	The system must support identification of the IPR holder	P9CNLD
13.53	The system must support identification of author	P9CNLD
13.54	The system must support identification of the source/provider of material	P9CNLD
13.55	Content control and supervision must be authenticatable	P10AUT
13.56	Proof/tracing data for Legal proceedings must be authenticatable	P10AUT
13.57	Transmission logging data should be secure and authenticatable	P10AUT
13.60	Provide plug and play capability for connection to in home digital consumer electronic equipment	P7MPMMDP
	FUNCTIONS CONSIDERED TO BELONG TO APPLICATIONS	
	Games applications	
104.01	The system should permit high scores for games to be recorded.	P9DAPP
104.02	The system should enable a service provider to provide advertisements for new games.	P9DAPP
104.03	The system should permit a service provider to record and distribute high scores for games.	P9DAPP

B.4 List of tools required to implement the system functions

B.4.1 Introduction

In this subclause for each system function listed above a short descriptive summary is provided along with a detailed lists of DAVIC tools is given in the form of a table. Note that the normative technical content of this

 © ISO/IEC 1999 - All rights reserved

Copyright International Organization for Standardization
Provided by IHS under license with ISO
No reproduction or networking permitted without license from IHS Not for Resale

Appendix is constrained to these detailed lists. The tables contain for each component of the DAVIC tools: a description of the DAVIC tool component, a reference to the DAVIC specification, additional implementation information which may be required for full interoperability and other contours for which the tool component is relevant.

B.4.2 Mid- and high-layer protocols

Common transport mechanisms are vital to realize full service interoperability. Apart from the functionality to deliver accurately synchronized streams (A./V/Graphics) functionality is needed to transmit data sets (files) which are presented upon user demand. Key tools specified by DAVIC include MPEG-2 Transport Streams and MPEG-2 DSMCC.

Table B4-1 describes the protocols required for the transmission of uni-directional Real-Time Streams. This is the basic function to transmit Audio and Video while maintaining proper synchronisation.

Table B4-1 — Function P7URTS: High and Mid layer Protocols for unidirectional Real-Time Stream Transmission

#	Description	DAVIC Clause	Additional Implementation Information	Common with Contour
1	S1 Flow Description	Part 7 Section 6.1		EDB
2	Overview of protocol stacks	Part 7 Section 6.2		EDB
4	MPEG-2 Program specific Information. Indicates which streams are present in a MPEG-2 Transport Stream	Part 7 Section 6.3.10		EDB
5	MPEG-2 Transport Stream - overall protocol for the transmission of uni-directional information	Part 7 Section 6.3.11		EDB
6	MPEG Packetised Elementary Stream for the transmission of real-time synchronised streams	Part 7 Section 6.3.1 & 6.3.4		EDB

Table B4-2 specifies some additional mid- and high-layer protocols for Real-Rime stream transmission. In particular with respect to streams of graphic pictures (animations, subtitling) and Stream Events which are markers embedded in a real-time stream which can be used to trigger a specific (application defined) action in a service

Table B4-2 — Function P7URTSE: Additional High and Mid layer Protocols for unidirectional Real-Time Stream Transmission

#	Description	DAVIC Clause	Additional Implementation Information	Common with Contour
1	Stream Events - Markers in the broadcast stream to trigger events in the application	Part 7 Section 7.3.8.2		EDB
2	(Transport of) Normal Play Time and Stream Mode	Part 7 Section 7.1 - third paragraph		EDB

--`,,```,,,,````-`-`,,`,,`,`,,`---

Copyright International Organization for Standardization
Provided by IHS under license with ISO
No reproduction or networking permitted without license from IHS Not for Resale

Apart from Real-Time streams, broadcast applications also require access to other data which can be presented under application control to the user. Examples are text, graphics, sounds. Within DAVIC a mechanism is adopted to cyclically transmit data in a carousel fashion. Also a “name space” is provided which allows applications to refer to specific named objects transmitted via the carousels. Table B4-3 specifies the DAVIC tools used for these functions. The key tool is MPEG-2 DSM-CC.

Table B4-3 — Function P7UNRT: Mid- and High-layer protocols for unidirectional Non Real-Time Transmission

Item	Description	DAVIC Clause	Additional Implementation Information	Common with Contour
1	S1 Flow Description	Part 7 Section 6.1		EDB
2	Overview of protocol stacks	Part 7 Section 6.2		EDB
3	MPEG-2 Program specific Information. Indicates which streams are present in a MPEG-2 Transport Stream	Part 7 Section 6.3.10		EDB
4	MPEG-2 Transport Stream - overall protocol for the transmission of uni-directional information	Part 7 Section 6.3.11		EDB

 © ISO/IEC 1999 - All rights reserved

Copyright International Organization for Standardization
Provided by IHS under license with ISO
No reproduction or networking permitted without license from IHS Not for Resale

5	MPEG-2 Private Section - generic method for transmission of chunks of data	Part 7 Section 6.3.2		EDB
6	DSMCC- Private Section Specific instance of P7UNRT.1 for the transmission of DSMCC data	Part 7 Section 6.3.3	Not applicable to support P9SI	EDB
7	Stored Monomedia Stream - specifies the use of DSMCC U-U Object Carousels Provides transmission of "A/V clips - sound maps" which are stored in the receiver for playback under application control. Example is a audible effect if a user presses a button. These streams are encapsulated in PES packets and transmitted as DSMCC U-U objects.	Part 7 Section 6.3.7	Only applicable to support P9VIDMS, P9VIDHS, P9AUDMP1S, P9AUATS, P9CGS, P9SPICS, P9CCS, P9LNAD	EDB
8	Stand-alone Monomedia Components - provides transmission of bitmaps, text etc - specifies the use of DSMCC U-U Object Carousels.	Part 7 Section 6.3.8	Only applicable to support P9CGB, P9SPB, P9TXT, P9DAPP, P9PAPP	EDB
9	Other Data - such as Service Information, Application Code - transmitted as MPEG-2 Private Sections	Part 7 Section 6.3.9	Only applicable to support P9SI	EDB
10	DSM-CC Options Summary - add precision to the use of DSMCC in the DAVIC context	Part 7 Section 7.3.1	Only those clauses which are relevant to uni-cast transmission - only applicable if DSMCC Object Carousels are used	EDB
11	File Access - Describes the functions to Access Files transmitted via Carousels	Part 7 Section 7.3.9	Only the read function is supported - only applicable if DSMCC Object Carousels are used	EDB
12	Use of the DSM-CC User-to-User interface in the DAVIC distribution profile	Part 7 Section 7.3.11	Only applicable if DSMCC Object Carousels are used	EDB
13	Support of DSM-CC User to User Interaction - specifies the use of DSMCC Object Carousels	Part 7 Section 7.2.2 - Figure 7-7	Only applicable if DSMCC Object Carousels are used	EDB

Using the return channel, information is transmitted in a point-to-point fashion. DSMCC provides the file system whereas TCP/IP provides reliable point-to-point information transmission. Note that DSMCC can provide unified access to both the broadcast as well as the bidirectional channel which hides the actual transport method from the application. Table B4-4 specificies the DAVIC tools used for bi-directional transmission

Copyright International Organization for Standardization
Provided by IHS under license with ISO
No reproduction or networking permitted without license from IHS Not for Resale

Table B4-4 — Function P7BUCD: Mid- and High-layer protocols for bi-directional transfer

#	Description	DAVIC Clause	Additional Implementation Information	Common with Contour
1	S2 flow description	Part 7 Section 7.1		
2	Download Control	Part 7 Section 7.2.1	ATM Case is not applicable	
3	User-User interaction Protocols for the return channel	Part 7 Section 7.2.2	ATM case is not applicable	
4	Description of specific protocols	Part 7 Section 7.3		
5	DSM-CC Option choices summary	Part 7 Section 7.3.1		
6	Remote Procedure Call - Mechanism to access functionality provided by the Server	Part 7 Section 7.3.2		
7	Download	Part 7 Section 7.3.3		
8	User-User Interaction	Part 7 Section 7.3.4		
9	Service Gateway Function	Part 7 Section 7.3.5		
10	Application Service Functions	Part 7 Section 7.3.6		
11	Access Control	Part 7 Section 7.3.7		
12	Stream Service Functions	Part 7 Section 7.3.8.		
13	File Access	Part 7 Section 7.3.9		

DAVIC provides a tool for transmission of IP over MPEG2 transmission. Table B4-5 specifies the DAVIC clauses.

Table B4-5 — Function P7IPMP2: Mid- and High-layer protocols for transmission of IP over MPEG2 transmission

1	Broadband MPEG-2 TS Encapsulation format and filtering - Specifies “tunneling” of IP datagrams in MPEG-2 Transport Stream	Part 7 Section 6.3.11.1	Only one way	

 © ISO/IEC 1999 - All rights reserved

Copyright International Organization for Standardization
Provided by IHS under license with ISO
No reproduction or networking permitted without license from IHS Not for Resale

DAVIC has selected DSMCC as the interface to control content transfer. Table B4-6 specificies the DAVIC tools used for content loading

Table B4-6 — Function P7CNLD: High and Mid Layer Protocols for content transfer

#	Description	DAVIC Clause	Additional Implementation Information	Common with Contour
1	A10 content transfer Interface	Part 7 Section 7.3.14		EDB

DAVIC has specified tools to interface a Network-Interface-Unit to a Set-Top-Unit. Table B4-7 specificies the protocols defined by DAVIC for use on this interface.

Table B4-7 — Function P7A0: Protocols for interfacing a Network-Interface-Unit to a Set-Top-Unit

#	Description	DAVIC Clause	Additional Implementation Information	Common with Contour
1	Connection Block Descriptors and Initialisation Protocols for A0 - Protocols to initialise and control the Network-Interface-Unit from the Set-Top-Unit	Part 7 Section 12		EDB

DAVIC has specified tools to equip a Set-Top-Unit with a Multimedia Dataport. This Multimedia Dataport can be used to connect the STU to a variety of other equipment. Table B4-8 specificies the protocols defined by DAVIC for use on this interface to support MPEG based services. Table B4-9 specificies the protocols defined by DAVIC for use on this interface to support IP based services.

Table B4-8 — Function P7MPMMDP: Protocols for MPEG based services on the STU Multimedia Dataport

#	Description	DAVIC Clause	Additional Implementation Information	Common with Contour
1	Protocols Stacks for the STU Multimedia Dataport - MPEG Based Services	Part 7 Section 13.1.1		EDB
2	TC Layer for MPEG Applications	Part 8 Section 9.2.3.1		EDB

Table B4-9 — Function P7IPMMDP: Protocols for IP based services on the STU Multimedia Dataport

#	Description	DAVIC Clause	Additional Implementation Information	Common with Contour
1	Protocols Stacks for the STU Multimedia Dataport - IP Based Services	Part 7 Section 13.1.2		
2	Support of IP services over the STU Multimedia Dataport - describes the encapsulation of IP packets in IEEE 1394 packets	Part 7 Section 13.2		
3	TC Layer for IP applications	Part 8 Section 9.2.3.2		

Copyright International Organization for Standardization
Provided by IHS under license with ISO
No reproduction or networking permitted without license from IHS Not for Resale

B.4.3 Lower Layer Protocols and Physical Interfaces

DAVIC has specified tools for digital transmission for a variety of media. This subclause details those functions applicable to broadcast.

B.4.3.1 Passband Uni- and Bi-directional PHY on coax

Table B4-10 indicates the clauses from DAVIC Part 8 relevant to the unidirectional transmission over radio frequency coax (up to 1 GHz bandwidth) using QAM modulation in the context of the *Interactive Digital* Broadcast Contour.

Table B4-10 — Function P8PBUCX: Passband Unidirectional PHY on coax

#	Description	DAVIC Clause	Additional Implementation Information	Common with Contour
1	Passband Unidirectional Phy on coax	Part 8 Section 7.7.X	The frame structure should be MPEG-2 TS. Sections 7.7.3, 7.7.4.1 and 7.7.5.X do not apply. Note that two Grades are specified. Selection between Grade A and Grade B (256 QAM) has to be agreed upon by the parties involved with the realisation of a DAVIC system	EDB

Table B4-11 indicates the clauses from DAVIC Part 8 relevant to the bi-directional transmission over radio frequency coax (up to 1 GHz bandwidth) using QPSK modulation in the context of the *Interactive Digital* Broadcast Contour.

Table B4-11 — Function P8PBBCX: Passband Bi-directional PHY on coax

#	Description	DAVIC Clause	Additional Implementation Information	Common with Contour
1	Passband Bi-directional PHY on coax	Part 8 Section 7.8.X	Note that three grades are specified. Selection between Grade A and Grade B Downstream (1.544 or 3.088 Mbit/s QPSK) and A,B,C upstream (0.256, 1.544, 3.088 Mbit/s) has to be agreed upon by the parties involved with the realisation of a DAVIC system	

B.4.3.2 Passband Uni- directional PHY on satellite

Table B4-12 indicates the clauses from DAVIC Part 8 relevant to the uni-directional transmission over a satellite transmission system using QPSK modulation in the context of the *Interactive Digital* Broadcast Contour.

Table B4-12 — Function P8PBUSL: Passband Unidirectional PHY on satellite

#	Description	DAVIC Clause	Additional Implementation Information	Common with Contour
1	Passband Unidirectional Phy on Satellite	Part 8 Section 7.9.X		EDB

 © ISO/IEC 1999 - All rights reserved

Copyright International Organization for Standardization
Provided by IHS under license with ISO
No reproduction or networking permitted without license from IHS Not for Resale

B.4.3.3 Passband Uni- directional PHY on MMDS

DAVIC defines tools for the uni-directional transmission over radio frequency (up to 10 GHz) using QAM modulation. It is refered to as Microwave Multipoint Distribution Services. Table B4-13 indicates the clauses from DAVIC Part 8 relevant to MMDS in the context of the *Interactive Digital* Broadcast Contour.

Table B4-13 — Function P8PBUMD: Passband Unidirectional PHY on MMDS

#	Description	DAVIC Clause	Additional Implementation Information	Common with Contour
1	Passband Unidirectional Phy on MMDS	Part 8 Section 7.10.x	The frame structure should be MPEG-2 TS. Hence 7.10.1.3 and 7.10.1.5 are not applicable. 7.10.2 and 7.10.3 are not applicable to Uni-directional MMDS. Note that three grades are specified. Selection between Grade A, A+, B (16 and 64 QAM, 16 and 64 QAM/TCM,256 QAM) has to be agreed upon by the parties involved with the realisation of a DAVIC system	EDB

B.4.3.4 Passband Uni- and Bi-directional PHY on LMDS

DAVIC defines tools for the uni- and bi-directional transmission over radio frequency (above 10 GHz) using QPSK or QAM modulation. It is referred to as Local Multipoint Distribution Services. Table B4-14 indicates the clauses from DAVIC Part 8 relevant to uni-directional LMDS in the context of the *Interactive Digital* Broadcast Contour. Table B4-15 indicates the clauses from DAVIC Part 8 relevant to bi-directional LMDS in the context of the *Interactive Digital* Broadcast Contour.

Copyright International Organization for Standardization
Provided by IHS under license with ISO
No reproduction or networking permitted without license from IHS Not for Resale

Table B4-14 — Function P8PBULM: Passband Unidirectional PHY on LMDS

#	Description	DAVIC Clause	Additional Implementation Information	Common with Contour
1	Passband Bidirectional Phy on LMDS	Part 8 Section 7.11.X	The frame structure should be MPEG-2 TS. Hence 7.11.1.3 and 7.11.1.5 are not applicable. 7.11.2 and 7.11.3 are not applicable to Uni-directional MMDS. Note that two grades are specified. Selection between Grade A and B (QPSK or 16 QAM) has to be agreed upon by the parties involved with the realisation of a DAVIC system	

Table B4-15 — Function P8PBBLM: Passband Bi-directional PHY on LMDS

#	Description	DAVIC Clause	Additional Implementation Information	Common with Contour
1	Passband Bi-directional PHY on LMDS	Part 8 Section 7.11.2.X and 7.11.3.X		

B.4.3.5 Low-speed Symmetrical PHY on the PSTN, the ISDN and the Public Land Mobile Networks

Davic has specified tools which utilise the PSTN, the ISDN and the PLMN as a bi-directional communication path in the end-to-end delivery system by making use of a modem. Table B4-16, Table B4-17 and Table B4-18 list the clauses from DAVIC Part 8 relevant to the above networks in the context of the *Interactive Digital* Broadcast Contour.

Table B4-16 — Function P8LSSPS: Low-Speed Symmetrical PHY on the PSTN

#	Deshcription	DAVIC Clause	Additional Implementation Information	Common with Contour
1	The Narrowband Core Network	Part 8 Section 6.2		
2	Low-Speed Symmetrical PHY on the PSTN	Part 8 Section 7.1	Note that four performance levels are specified. Selection between level 1, 2, 3 or 4 (2.4 kbit/s, 9.6 kbit/s, 14.4 kbit/s, 28.8 kbit/s) has to be agreed upon by the parties involved with the realisation of a DAVIC system	

Table B4-17 — Function P8LSSIS: Low-Speed Symmetrical PHY on the ISDN

#	Description	DAVIC Clause	Additional Implementation Information	Common with Contour
1	The Narrowband Core Network	Part 8 Section 6.2		
2	Low-Speed Symmetrical PHY on the ISDN	Part 8 Section 7.2		

 © ISO/IEC 1999 - All rights reserved

--`,,```,,,,````-`-`,,`,,`,`,,`---
Copyright International Organization for Standardization
Provided by IHS under license with ISO
No reproduction or networking permitted without license from IHS
Not for Resale

Table B4-18 — Function P8LSPLM: Low-Speed Symmetrical PHY on Public Land Mobile Networks

#	Description	DAVIC Clause	Additional Implementation Information	Common with Contour
1	The Narrowband Core Network	Part 8 Section 6.2		
2	Low-Speed Symmetrical PHY on Public Land Mobile Networks	Part 8 Section 7.3	Note that four performance levels are specified. Selection between level 1, 2, 3 or 4 (1,2 kbit/s, 2.4 kbit/s, 4.8 kbit/s, 9.6 kbit/s) has to be agreed upon by the parties involved with the realisation of a DAVIC system	

B.4.3.6 Network-Interface-Unit to Set-Top-Unit Interface

DAVIC has specified tools to interface a Network-Interface-Unit to a Set-Top-Unit. Specifically one set of tools for NIUs located within the STU enclosure (e.g.: "internal" NIUs), and one for standalone NIUs located outside the STU enclosure (e.g.: "external" NIUs). Table B4-19 specificies the physical interface defined by DAVIC for the intenal NIUs. Table B4-20 specificies the physical interface defined by DAVIC for the external NIUs.

Table B4-19 — Function P8A0INT: Interface of Set-Top-Unit to Internal Network-Interface-Unit

#	Description	DAVIC Clause	Additional Implementation Information	Common with Contour
1	Introduction to the A0 interface	Part 8 Section 8.1	Description only	EDB
2	Functional Description of the A0 interface	Part 8 Section 8.2	Description only	EDB
3	Capability Levels Required for A0	Part 8 Section 8.3	Only level A capability is required	EDB
4	Definition of Internal and External A0	Part 8 Section 8.4	For P8A0INT only the Internal A0 is applicable	EDB
5	Specification of the Internal A0 (Digital Part)- specifies connector, pin assignment and electrical specification	Part 8 Section 8.5		EDB
6	Optional Internal A0 Specification (Analog Pass-Through Part) - specifies how digitized analog baseband video and audio is carried over the internal A0 interface	Part 8 Section 8.6	Support of this tool is optional	EDB

Copyright International Organization for Standardization
Provided by IHS under license with ISO
No reproduction or networking permitted without license from IHS Not for Resale

Table B4-20 — Function P8A0EXT: Interface of Set-Top-Unit to External Network-Interface-Unit

#	Description	DAVIC Clause	Additional Implementation Information	Common with Contour
1	Introduction to the A0 interface	Part 8 Section 8.1	Description only	EDB
2	Functional Description of the A0 interface	Part 8 Section 8.2	Description only	EDB
3	Capability Levels Required for A0	Part 8 Section 8.3	Only level A capability is required	EDB
4	Definition of Internal and External A0	Part 8 Section 8.4	For P8A0INT only the Internal A0 is applicable	EDB
5	External A0 Specification (Digital Part) - specifies the use of IEEE 1394	Part 8 Section 8.7		EDB
6	Optional Internal A0 Specification (Analog Pass-Through Part) - specifies how analog baseband video and audio is carried over the external A0 interface	Part 8 Section 8.8	Support of this tool is optional	EDB

B.4.3.7 STU Dataport Interface

DAVIC has specified tools to equip a Set-Top-Unit with a Multimedia Dataport. This Multimedia Dataport can be used to connect the STU to a variety of other equipment. Table B4-21 specificies the physical interface defined by DAVIC for this purpose.

Table B4-21 — Function P8MMDP: Physical Inteface for STU Multimedia Dataport

#	Description	DAVIC Clause	Additional Implementation Information	Common with Contour
1	Physical Specification - IEEE 1394-1995	Part 8 Section 9.2, 9.2.1		EDB
2	Electrical Specification - IEEE 1394-1995	Part 8 Section 9.2.2		EDB

B.4.4 Information Representation

System interoperability requires agreements on the way the various types of information required for the application are expressed. DAVIC Part 9 describes a comprehensive set which in general reuses the appropriate standards from the Classical Broadcast domain (DVB and ATSC) as well as from the WWW. Apart from the actual coding formats, DAVIC Part 9 also describes methods of encapsulation to be used in conjunction with the transport mechanisms specified in subclause B.4.2.

B.4.4.1 Compressed Video

DAVIC specifies the use of MPEG-2 for compressed video coding. DAVIC distinguishes between two sets of resolutions and also whether the stream is real-time (presented immediately after reception) or a stored stream (presented from memory under control of an application) The following tables: Table B4-22, Table B4-23, Table

 © ISO/IEC 1999 - All rights reserved

Copyright International Organization for Standardization
Provided by IHS under license with ISO
No reproduction or networking permitted without license from IHS Not for Resale

B4-24 and Table B4-25 indicate the clauses from DAVIC Part 9 relevant to compressed video in the context of the *Interactive Digital* Broadcast Contour for the functions identified above.

Table B4-22 — Function P9VIDMR: Information Representation for real-time Compressed Video streams with a resolution up to ITU-R 601

#	Description	DAVIC Clause	Additional Implementation Information	Common with Contour
1	Compressed Video - Specifies the Use of MPEG-1/2 Video	Part 9 Section 6.10		EDB
2	Coding Constraints for video with a resolution up to ITU-R 601	Part 9 Section 6.10.1.x		EDB
4	Types of Monomedia Components – Identifies Compressed Video as an instance of a Monomedia Component	Part 9 Section 7.1		EDB
5	Real-time and Stored Monomedia Streams - Identifies Compressed Video as an instance of both real-time and stored streams	Part 9 Section 7.2	Support for Compressed Video as a stored stream is not a part of P9VIDMR	EDB
6	Carriage of Monomedia Streams in PES Packets	Part 9 Section 7.3		EDB
7	Packetization of MPEG and ATSC-defined Components	Part 9 Section 7.3.1		EDB
8	Transport of Real-Time Streams	Part 9 Section 8, 8.1		EDB

Table B4-23 — Function P9VIDHR: Information Representation for real-time Compressed Video streams with a resolution beyond ITU-R 601

#	Description	DAVIC Clause	Additional Implementation Information	Common with Contour
1	Compressed Video - Specifies the Use of MPEG-1/2 Video	Part 9 Section 6.10		EDB
3	Coding Constraints for video with a resolution beyond ITU-R 601	Part 9 Section 6.10.2.x		EDB
4	Types of Monomedia Components – Identifies Compressed Video as an instance of a Monomedia Component	Part 9 Section 7.1		EDB
5	Real-time and Stored Monomedia Streams - Identifies Compressed Video as an instance of both real-time and stored streams	Part 9 Section 7.2	Support for Compressed Video as a stored stream is not a part of P9VIDHR	EDB
6	Carriage of Monomedia Streams in PES Packets	Part 9 Section 7.3		EDB
7	Packetization of MPEG and ATSC-defined Components	Part 9 Section 7.3.1		EDB
8	Transport of Real-Time Streams	Part 9 Section 8, 8.1,		EDB

--`,,```,,,,````-`-`,,`,,`,`,,`---
Copyright International Organization for Standardization
Provided by IHS under license with ISO
No reproduction or networking permitted without license from IHS Not for Resale

Table B4-24 — Function P9VIDMS: Information Representation for stored Compressed Video streams with a resolution up to ITU-R 601

#	Description	DAVIC Clause	Additional Implementation Information	Common with Contour
1	Compressed Video - Specifies the Use of MPEG-1/2 Video	Part 9 Section 6.10		EDB
2	Coding Constraints for video with a resolution up to ITU-R 601	Part 9 Section 6.10.1.x		EDB
4	Types of Monomedia Components – Identifies Compressed Video as an instance of a Monomedia Component	Part 9 Section 7.1		EDB
5	Real-time and Stored Monomedia Streams - Identifies Compressed Video as an instance of both real-time and stored streams	Part 9 Section 7.2	Support for Compressed Video as a real-time stream is no a part of P9VIDMS	EDB
6	Carriage of Monomedia Streams in PES Packets	Part 9 Section 7.3		EDB
7	Packetization of MPEG and ATSC-defined Components	Part 9 Section 7.3.1		EDB
8	Transport of stored streams	Part 9 Section 8, 8.2		EDB

Table B4-25 — Function P9VIDHS: Information Representation for stored Compressed Video streams with a resolution up to ITU-R 601

#	Description	DAVIC Clause	Additional Implementation Information	Common with Contour
1	Compressed Video - Specifies the Use of MPEG-1/2 Video	Part 9 Section 6.10		EDB
3	Coding Constraints for video with a resolution beyond ITU-R 601	Part 9 Section 6.10.2.x		EDB
4	Types of Monomedia Components – Identifies Compressed Video as an instance of a Monomedia Component	Part 9 Section 7.1		EDB
5	Real-time and Stored Monomedia Streams - Identifies Compressed Video as an instance of both real-time and stored streams	Part 9 Section 7.2	Support for Compressed Video as a real-time stream is not a port of P9VIDHS	EDB
6	Carriage of Monomedia Streams in PES Packets	Part 9 Section 7.3		EDB
7	Packetization of MPEG and ATSC-defined Components	Part 9 Section 7.3.1		EDB
8	Transport of Stored streams	Part 9 Section 8, 8.2		EDB

 © ISO/IEC 1999 - All rights reserved

--`,,```,,,,````-`-`,,`,,`,`,,`---

Copyright International Organization for Standardization
Provided by IHS under license with ISO
No reproduction or networking permitted without license from IHS Not for Resale

B.4.4.2 Compressed Audio

DAVIC specifies the use of MPEG-1 for compressed audio coding as well as ATSC A/52 for surround sound compressed audio coding. Compressed audio can be used as a stream which is played directly from the network and also as a stored stream which is played from memory under control of an application. The following tables: indicate the clauses from DAVIC Part 9 relevant to compressed audio in the context of the *Interactive Digital* Broadcast Contour for the functions identified above.

Table B4-26 — Function P9AUDMP1R: Information Representation for Real-Time Compressed Audio using MPEG-1

#	Description	DAVIC Clause	Additional Implementation Information	Common with Contour
1	Compressed Audio - Specifies the use of MPEG-1 and ATSC A/52 as audio coding standards	Part 9 Section 6.7		EDB
2	Compressed audio - coding using MPEG-1 Audio Coding	Part 9 Section 6.7.1		EDB
4	Types of Monomedia Components - Identifies Compressed Audio as an instance of a Monomedia Component	Part 9 Section 7.1		EDB
5	Real-time and Stored Monomedia Streams - Identifies Compressed Audio as an instance of both real-time and stored streams	Part 9 Section 7.2	Support for Compressed Audio as a stored stream is not part of P9AUDMP1R	EDB
6	Carriage of Monomedia Streams in PES Packets	Part 9 Section 7.3		EDB
7	Packetization of MPEG and ATSC-defined Components	Part 9 Section 7.3.1		EDB
8	Transport of Real-Time Streams and Components	Part 9 Section 8, 8.1		EDB

Copyright International Organization for Standardization
Provided by IHS under license with ISO
No reproduction or networking permitted without license from IHS Not for Resale

Table B4-27 — Function P9AUDATR: Information Representation for Real-Time Compressed Audio streams using ATSC A/52

#	Description	DAVIC Clause	Additional Implementation Information	Common with Contour
1	Compressed Audio - Specifies the use of MPEG-1 and ATSC A/52 as audio coding standards	Part 9 Section 6.7		EDB
3	Compressed audio coding for multi-channel surround sound using ATSC A/52	Part 9 Section 6.7.2		EDB
4	Types of Monomedia Components - Identifies Compressed Audio as an instance of a Monomedia Component	Part 9 Section 7.1		EDB
5	Real-time and Stored Monomedia Streams – Identifies Compressed Audio as an instance of both real-time and stored streams	Part 9 Section 7.2	Support for Compressed Audio as a stored stream is not part of P9AUDATR	EDB
6	Carriage of Monomedia Streams in PES Packets	Part 9 Section 7.3		EDB
7	Packetization of MPEG and ATSC-defined Components	Part 9 Section 7.3.1		EDB
8	Transport of Real-Time Streams	Part 9 Section 8, 8.1		EDB

 © ISO/IEC 1999 - All rights reserved

Copyright International Organization for Standardization
Provided by IHS under license with ISO
No reproduction or networking permitted without license from IHS
Not for Resale

Table B4-28 — Function P9AUDMP1S: Information Representation for stored Compressed Audio streams using MPEG-1

#	Description	DAVIC Clause	Additional Implementation Information	Common with Contour
1	Compressed Audio - Specifies the use of MPEG-1 and ATSC A/52 as audio coding standards	Part 9 Section 6.7		EDB
2	Compressed audio - coding using MPEG-1 Audio Coding	Part 9 Section 6.7.1		EDB
4	Types of Monomedia Components – Identifies Compressed Audio as an instance of a Monomedia Component	Part 9 Section 7.1		EDB
5	Real-time and Stored Monomedia Streams - Identifies Compressed Audio as an instance of both real-time and stored streams	Part 9 Section 7.2	Support for Compressed Audio as a Real-Time stream is not part of P9AUDMP1S	EDB
6	Carriage of Monomedia Streams in PES Packets	Part 9 Section 7.3		EDB
7	Packetization of MPEG and ATSC-defined Components	Part 9 Section 7.3.1		EDB
8	Transport of Stored Streams	Part 9 Section 8, 8.2		EDB

Table B4-29 — Function P9AUDATS: Information Representation for stored Compressed Audio streams using ATSC A/52

#	Description	DAVIC Clause	Additional Implementation Information	Common with Contour
1	Compressed Audio - Specifies the use of MPEG-1 and ATSC A/52 as audio coding standards	Part 9 Section 6.7		EDB
3	Compressed audio coding for multi-channel surround sound using ATSC A/52	Part 9 Section 6.7.2		EDB
4	Types of Monomedia Components – Identifies Compressed Audio as an instance of a Monomedia Component	Part 9 Section 7.1		EDB
5	Real-time and Stored Monomedia Streams - Identifies Compressed Audio as an instance of both real-time and stored streams	Part 9 Section 7.2	Support for Compressed Audio as a Real-Time stream is not part of P9AUDATS	EDB
6	Carriage of Monomedia Streams in PES Packets	Part 9 Section 7.3		EDB
7	Packetization of MPEG and ATSC-defined Components	Part 9 Section 7.3.1		EDB
8	Transport of Stored Streams	Part 9 Section 8, 8.2		EDB

B.4.4.3 Still Pictures and Graphics

Copyright International Organization for Standardization
Provided by IHS under license with ISO
No reproduction or networking permitted without license from IHS Not for Resale

DAVIC specifies several tools for the representation of Still Pictures and Graphics namely: Still Pictures, Compressed Graphics and Compressed Character Data.. The Still Pictures tool is intended for the representation of natural images. The Compressed Graphics tools is intended for the represenation of synthetic images such as subtitles and animations. The Compressed Character Data tools is intended for the graphical representation of text. All of these tools can used as Real Time or Stored streams. Still Pictures and Compressed Graphics can also be used as a stand-alone component.

B.4.4.3.1 Still Pictures

Many applications require presentation of high-quality (photo-realistic) still images. DAVIC has selected MPEG-2 for this as the facility for MPEG-2 decoding is already present in each receiver and the coding efficiency of MPEG-2 is higher than for other standards such as JPEG.

The following tables indicate the clauses from DAVIC Part 9 relevant to still pictures in the context of the *Interactive Digital* Broadcast Contour.

Table B4-30 — Function P9SPICR : Information Representation for Real-Time streams of Still Pictures

#	Description	DAVIC Clause	Additional Implementation Information	Common with Contour
1	Still Pictures - Specifies the use of MPEG-2 I frames	Part 9 Section 6.11.1		EDB
2	Types of Monomedia Components – Identifies Still Pictures as stream or as stand-alone component	Part 9 Section 7.1	Support of Still Pictures as a stand-alone component is not a part of P9SPICR	EDB
3	Real-time and Stored Monomedia Streams - identifies a stream of still pictures as an instance of both real-time and stored streams	Part 9 Section 7.2	Support of Still Pictures as a stored stream is not a part of P9SPICR	EDB
4	Carriage of Monomedia Streams in PES Packets - Specifies that streams of Still Pictures are contained in PES packets	Part 9 Section 7.3		EDB
5	Packetization of MPEG and ATSC-defined Components - Specifies some details with respect to the way Streams of Still pictures are packaged	Part 9 Section 7.3.1		EDB
6	Transport of Real-Time Streams	Part 9 Section 8.1		EDB

 © ISO/IEC 1999 - All rights reserved

Copyright International Organization for Standardization
Provided by IHS under license with ISO
No reproduction or networking permitted without license from IHS Not for Resale

Table B4-31 — Function P9SPICS: Information Representation for stored streams of Still Pictures

#	Description	DAVIC Clause	Additional Implementation Information	Common with Contour
1	Still Pictures - Specifies the use of MPEG-2 I frames	Part 9 Section 6.11.1		EDB
2	Types of Monomedia Components - Identifies Still Pictures as stream or as stand-alone component	Part 9 Section 7.1	Support of Still Pictures as a stand-alone component is not a part of P9SPICS	EDB
3	Real-time and Stored Monomedia Streams - identifies a stream of still pictures as an instance of both real-time and stored streams	Part 9 Section 7.2	Support of Still Pictures as a Real-Time stream is not a part of P9SPICS	EDB
4	Carriage of Monomedia Streams in PES Packets - Specifies that streams of Still Pictures are contained in PES packets	Part 9 Section 7.3		EDB
5	Packetization of MPEG and ATSC-defined Components - Specifies some details with respect to the way Streams of Still pictures are packaged	Part 9 Section 7.3.1		EDB
6	Transport of Stored Streams	Part 9 Section 8.2		EDB

Table B4-32 — Function P9SPB: Information Representation for Still Picture bitmaps

#	Description	DAVIC Clause	Additional Implementation Information	Common with Contour
1	Still Pictures – Specifies the use of MPEG-2 I frames	Part 9 Section 6.11.1		EDB
2	Types of Monomedia Components - Identifies Still Pictures as stream or as stand-alone component	Part 9 Section 7.1	Support of Still Pictures as a stream is not a part of P9SPB	EDB
5	Packetization of MPEG and ATSC-defined Components - Specifies some details with respect to the way Streams of Still pictures are packaged	Part 9 Section 7.3.1		EDB
6	Transport of Stand-alone Monomedia Components	Part 9 Section 8.3		EDB

B.4.4.3.2 Compressed Graphics

DAVIC specifies the use of DVB subtitling for streams of graphics pictures encoded as bitmaps which can be used for e.g., subtitling and animations. Graphics streams can be used as a stream which is played directly from the network and also as a stored stream which is played from memory under control of an application. A third possibility is the use of a single Compressed Graphics bitmap as a stand-alone component. The following tables: indicate the clauses from DAVIC Part 9 relevant to compressed graphics in the context of the *Interactive Digital* Broadcast Contour for the functions identified above.

Copyright International Organization for Standardization
Provided by IHS under license with ISO
No reproduction or networking permitted without license from IHS Not for Resale

Table B4-33 — Function P9CGR Information Representation for Compressed Graphics Real-Time streams

#	Description	DAVIC Clause	Additional Implementation Information	Common with Contour
1	Compressed Graphics - Specifies the use of DVB subtitling	Part 9 Section 6.12.2 , 6.12.2.1		EDB
2	Types of Monomedia Components - Identifies Compressed Graphics as a stream or as a stand-alone component	Part 9 Section 7.1	Support of Compressed Graphics as a stand-alone component is not a part of P9CGR	EDB
3	Real-time and Stored Monomedia Streams - Identifies Compressed Graphics an instance of both real-time and stored streams	Part 9 Section 7.2	Support of stored streams is not a part of P9CGR	EDB
4	Carriage of Monomedia Streams in PES Packets - Specifies that Compressed Graphics is carried in PES packets	Part 9 Section 7.3		EDB
5	Packetization of DVB-defined Components - Specifies that the packetization of Compressed Graphics conforms to the DVB subtitling specification	Part 9 Section 7.3.2		EDB
6	Transport of Real-Time Streams	Part 9 Section 8.1		EDB

Table B4-34 — Function P9CGS Information Representation for Compressed Graphics stored streams

#	Description	DAVIC Clause	Additional Implementation Information	Common with Contour
1	Compressed Graphics - Specifies the use of DVB subtitling	Part 9 Section 6.12.2, 6.12.2.1		EDB
2	Types of Monomedia Components - Identifies Compressed Graphics as a stream or as a stand-alone component	Part 9 Section 7.1	Support of Compressed Graphics as a stand-alone component is not a part of P9CGS	EDB
3	Real-time and Stored Monomedia Streams - Identifies Compressed Graphics an instance of both real-time and stored streams	Part 9 Section 7.2	Support of real-time streams is not a part of P9CGS	EDB
4	Carriage of Monomedia Streams in PES Packets - Specifies that Compressed Graphics is carried in PES packets	Part 9 Section 7.3		EDB
5	Packetization of DVB-defined Components - Specifies that the packetization of Compressed Graphics conforms to the DVB subtitling specification	Part 9 Section 7.3.2		EDB
6	Transport of Stored Streams	Part 9 Section 8.2		EDB

 © ISO/IEC 1999 - All rights reserved

--`,,```,,,,````-`-`,,`,,`,`,,`---

Copyright International Organization for Standardization
Provided by IHS under license with ISO
No reproduction or networking permitted without license from IHS Not for Resale

Table B4-35 — Function P9CGB Information Representation for Compressed Graphics Bitmaps

#	Description	DAVIC Clause	Additional Implementation Information	Common with Contour
1	Compressed Graphics - Specifies the use of DVB subtitling and specifics how single bitmaps are coded.	Part 9 Section 6.12.2, 6.12.2.2		EDB
2	Types of Monomedia Components - Identifies Compressed Graphics as a stream or as a stand-alone Component	Part 9 Section 7.1	Support of Compressed Graphics as a stream is not a part of P9CGB	EDB
3	Transport of stand-alone Components	Part 9 Section 8.3		EDB

B.4.4.3.3 Compressed Character Data Streams

DAVIC defines a format for compressed character data streams. These streams can be used as a stream which is played directly from the network and also as a stored stream which is played from memory under control of an application. The following tables: indicate the clauses from DAVIC Part 9 relevant to compressed character data streams graphics in the context of the *Interactive Digital* Broadcast Contour for the functions identified above.

Table B4-36 — Function P9CCR Information Representation for Compressed Character Data Real-Time streams

#	Description	DAVIC Clause	Additional Implementation Information	Common with Contour
1	Compressed Character Data	Part 9 Section 6.13		EDB
2	Types of Monomedia Components - Identifies Compressed Character Data Graphics as a stream	Part 9 Section 7.1		EDB
3	Real-time and Stored Monomedia Streams - Identifies Compressed Character Data as an instance of both real-time and stored streams	Part 9 Section 7.2	Support of stored streams is not a part of P9CCR	EDB
4	Carriage of Monomedia Streams in PES Packets - Specifies that Compressed Graphics is carried in PES packets	Part 9 Section 7.3		EDB
5	Packetization of DAVIC-defined componetns	part 9 Section 7.3.2, Annex D		
6	Transport of Real-Time Streams	Part 9 Section 8.1		EDB

Copyright International Organization for Standardization
Provided by IHS under license with ISO
No reproduction or networking permitted without license from IHS Not for Resale

Table B4-37 — Function P9CCS Information Representation for Compressed Character stored streams

#	Description	DAVIC Clause	Additional Implementation Information	Common with Contour
1	Compressed Character Data	Part 9 Section 6.13		EDB
2	Types of Monomedia Components - Identifies Compressed Character Data Graphics as a stream	Part 9 Section 7.1		EDB
3	Real-time and Stored Monomedia Streams - Identifies Compressed Character Data as an instance of both real-time and stored streams	Part 9 Section 7.2	Support of real-time streams is not a part of P9CCS	EDB
4	Carriage of Monomedia Streams in PES Packets - Specifies that Compressed Graphics is carried in PES packets	Part 9 Section 7.3		EDB
5	Packetization of DAVIC-defined componetns	part 9 Section 7.3.2, Annex D		
6	Transport of Stored Streams	Part 9 Section 8.2		EDB

B.4.4.4 Linear Audio

Linear audio is intended as an alternative means to present audio information in addition and possibly simultaneous with the main audio channel. Applications include audible-feedback to user actions such as key presses, audible indication of a special situation (error condition, timed event).

Table B4-38 indicates the clauses from DAVIC Part 9 relevant to linear audio in the context of the *Interactive Digital* Broadcast Contour.

Table B4-38 — Function P9LNAD: Information Representation for Stored Linear Audio streams

#	Description	DAVIC Clause	Additional Implementation Information	Common with Contour
1	Linear Audio - Specifies that Linear Audio is coded as AIFF-C	Part 9 Section 6.9		EDB
2	Types of Monomedia Components - Identifies Linear Audio as a monomedia component of the stream type	Part 9 Section 7.1		EDB
3	Real-time and Stored Monomedia Streams - Identifies linear audio as an instance of a stored stream	Part 9 Section 7.2		EDB
4	Carriage of Monomedia Streams in PES Packets - Specifies that Linear Audio is contained in PES packets	Part 9 Section 7.3		EDB
5	Packetization of DAVIC-defined Components	Part 9 Section 7.3.3		EDB
6	Transport of Stored Streams	Part 9 Section 8, 8.2		EDB
7	Coding of Linear Audio -Specifies the AIFF-C format	Annex B		EDB
8	Packetization of DAVIC defined Monomedia Components in PES packets - specifies details about how AIFF-C is contained in PES packets	Annex D		EDB

 © ISO/IEC 1999 - All rights reserved

Copyright International Organization for Standardization
Provided by IHS under license with ISO
No reproduction or networking permitted without license from IHS
Not for Resale

B.4.4.5 Text and Characters

DAVIC has selected a subset of the HTML 3.2 specification as a coding method for text with associated hyper links (corresponding to the MHEG-5 Hypertext Class anchor) . The coding of characters is based on Unicode to support multilingual text.

DAVIC has covered internationalization aspects by referencing work of the World Wide Web Consortium.

Detailed control of text presentation is provided by (Cascading) Style Sheets defined by the World Wide Web Consortium.

Table B4-39 indicates the clauses from DAVIC Part 9 relevant to text rendering issues in the context of the *Interactive Digital* Broadcast Contour

Table B4-39 — Function P9TXT: Information Representation for Text and Characters

#	Description	DAVIC Clause	Additional Implementation Information	Common with Contour
1	Character Information - Specifies the use of Unicode	Part 9 Section 6.1		EDB
2	Text Information - Specifies the use of a subset of HTML 3.2 for text markup coding	Part 9 Section 6.2.x		EDB
3	Types of Monomedia Components - Identifies Text as a stand-alone component	Part 9 Section 7.1		EDB
3	Transport of stand-alone Components	Part 9 Section 8, 8.3		EDB

B.4.4.6 Service Information

Service Information data forms part of the bitstream to provide the user with information to assist in the selection of services and/or events within the bitstream. DAVIC has selected ETSI ETS 300 468 (DVB) as its specification for the representation for Service Information. Table B4-40 indicates the clauses from DAVIC Part 9 relevant to text rendering issues in the context of the *Interactive Digital* Broadcast Contour

Table B4-40 — Function P9SI: Information Representation for Service Information

#	Description	DAVIC Clause	Additional Implementation Information	Common with Contour
1	Service Information- Specifies the use of DVB-SI for the coding of Service Information	Part 9 Section 6.5		EDB

B.4.4.7 Content Loading

DAVIC has defined tools for Content Packaging. A Structure as well as Metadata has been defined. Table B4-41 indicates the clauses from DAVIC Part 9 relevant to text rendering issues in the context of the *Interactive Digital* Broadcast Contour

Table B4-41 — Function P9CLND: Information Representation for Content Loading

#	Description	DAVIC Clause	Additional Implementation Information	Common with Contour
1	Content Packaging and Metadata - Introduction	Part 9 Section 11		EDB

Copyright International Organization for Standardization
Provided by IHS under license with ISO
No reproduction or networking permitted without license from IHS Not for Resale

2	Content Package Structure	Part 9 Section 11.1.x		EDB
3	Content Metadata	Part 9 Section 11.2.x		EDB

B.4.4.8 Application Format

Background Information:

Applications pose widely varying requirements to the Interactive Engine. Broadly speaking, two language styles are currently in active use and therefore included in the *Interactive Digital* Broadcast Contour as is the case in DAVIC:

1. A functional/declarative style. A declarative language consists of a collection of high-level explicitly specified functional objects. The possible interactions between these functional objects are also explicitly defined. Applications take the form of a interconnected set of objects. The functional style lends itself naturally to the implementation of services requiring navigation within a collection of "pages" containing information. Due to the high-level nature of the interface and the fact that there is no direct access from within applications to the infrastructure of the receiver applications reliable and safe execution is easily achieved.
2. A procedural style (Script/byte-code). Not all services can be expressed in the functional/declarative style. Examples are services that rely on extensive data manipulation and/or direct access to the receiver's infrastructure. In this case a procedural paradigm is more appropriate. This requires a so-called byte-code interface such as JAVA.

Specifications for an interactive engine supporting both styles are given in DAVIC Part 9 and are detailed below.

MHEG-5 has been selected as the declarative engine this is specifically designed for TV-oriented navigation-like services. Table B4-42 indicates the clauses from DAVIC Part 9 and Part 5 relevant for the *Interactive Digital* Broadcast Contour. This includes the mapping of MHEG-5 Elements to DSM-CC U-U which is the method used by the application to access its data either from the broadcast stream or from a point-to-point link (e.g., a telephone modem connection).

Table B4-42 — Function P9DAPP: Information Representation for Declarative Applications

#	Description	DAVIC Clause	Additional Implementation Information	Common with Contour
1	Application Interchange Format - Specifies the use of MHEG-5 for the coding of Declarative Applications	Part 9 Section 9.1	Only the first paragraph applies to the coding of Declarative Application	EDB
2	MHEG-5 profile for the DAVIC application domain - Specific details for the use of MHEG-5 in DAVIC	Part 9 Section 9.2.1, 9.2.2, 9.2.3, 9.2.4, 9.2.5, 9.2.6, 9.2.7, 9.2.8, 9.2.9, 9.2.10, 9.2.13		EDB
3	Mapping of MHEG-5 Elements to DSM-CC U-U - Specifies how MHEG-5 objects are retrieved using DSMCC	Part 9 Section 9.3.1, 9.3.2, 9.3.3, 9.3.4, 9.3.5		EDB
4	Reference Decoder Model- specifies the size and other relevant bounds to MHEG applications	Part 9 Section 10.1, 10.2, 10.3, 10.4		EDB

 © ISO/IEC 1999 - All rights reserved

Copyright International Organization for Standardization
Provided by IHS under license with ISO
No reproduction or networking permitted without license from IHS Not for Resale

5	Run-time execution environment	Part 9 Section 9.6, 9.6.1	Implementation of the JAVA VM and packages is not part of P9DAPP	EDB
6	User Input Events Specifies how User Input (e.g., RC keys) is mapped onto application level events	Part 9 Section 9.6.2		EDB
6	Connection Management Specifies the mapping between the application level and the transmission protocols for opening a return channel to access a remote application server	Part 9 Section 9.6.3		
7	IDL definition for RTE run remote call - Specifies the mapping between the application level and the remote procedure call mechanism to execute a RemoteProgram on an application server	Part 9 Section 9.6.4		

MHEG-5 provides a mechanism, the InterchangedProgram Class, to execute procedural code from within a MHEG application. DAVIC has selected this procedural code to be JAVA VM. DAVIC has also specified a core set of JAVA APIs. Table B4-43 indicates the clauses from DAVIC Part 9 and MHEG-6 relevant for the *Interactive Digital* Broadcast Contour.

Table B4-43 — Function P9PAPP: Information Representation for Procedural Applications

#	Description	DAVIC Clause	Additional Implementation Information	Common with Contour
1	Application Interchange Format - Specifies JAVA for the coding of procedural applications	Part 9 Section 9.1		EDB
2	Core set of Java APIs	Part 9 Section 9.4		EDB
3	java.lang - Minimal set of classes to run Java code	Part 9 Section 9.4.1		EDB
4	java.util - Utility features (strings, date handling, math)	Part 9 Section 9.4.2		EDB
5	java.io - access to non real time streams of data	Part 9 Section 9.4.3		EDB
6	iso.mheg5 - access to MHEG-5 objects	Part 9 Section 9.4.4		EDB
7	davic.dsmccuu -access to the DSMCC U-U interface for network data access	Part 9 Section 9.4.5	Support of this API is optional	EDB

B.4.4.9 Reference Decoder Model

DAVIC defines a Reference Decoding Model (RDM) which specifies semantic constraints on delivery, handling and decoding of content. The RDM does not describe any specific receiver architecture.

The RDM provides models for data delivery, memory usage for code and content objects and timing for object handling and instruction execution.

--`,,```,,,,````-`-`,,`,,`,`,,`---

Copyright International Organization for Standardization
Provided by IHS under license with ISO
No reproduction or networking permitted without license from IHS Not for Resale

DAVIC application developers use the RDM as a virtual platform for application development and as the tool for verification of application correctness, without requiring any application testing at each specific STU implementation of the DAVIC specification.

Table B4-44 indicates the clauses from DAVIC Part 9 relevant to the reference decoding model in the context of the *Interactive Digital* Broadcast Contour.

Table B4-44 — Function P9RDM Reference Decoder Model

#	Description	DAVIC Clause	Additional Implementation Information	Common with Contour
1	Scope - The RDM specifies semantic constraints on delivery, handling and decoding of content	Part 9 Section 10.1		EDB
2	Reference Decoding Model - Specification of the Reference Decoder Model	Part 9 Section 10.2		EDB
3	DAVIC Application Resource Descriptor - Descriptor which describes resources needed to execute a specific application on a receiver	Part 9 Section 10.3		EDB
4	Minimum DAVIC 1.2 STU requirements	Part 9 Section 10.4		EDB
5	Support for Graphics in STU	Part 9 Section 10.5		EDB
6	Persistent Memory	Part 9 Section 10.6		EDB

B.4.5 Security

DAVIC provides several kinds of tools for security. Two sets of tools deal with interfaces to detachable security devices. They are listed in Table B4-45 and Table B4-46 below. Another set of tools, listed in Table B4-47 below, deals with authentication. Finally a set of tools, listed in Table B4-48 below, for the secure download (with respect to integrity, source and freshness of the information) of information to the STU has been defined.

Table B4-45 — Function P10CA0: Security Tool for Conditional Access based on PCCard Form Factor

#	Description	DAVIC Clause	Additional Implementation Information	Common with Contour
1	S1 Scrambling - Describes the methodology of rendering information unintelligible to prevent use of protected material by unauthorised individuals	Part 10 Section 10.1		EDB
2	Security Interfaces - describes the approach adopted by DAVIC to put the vital security elements of the SCS on detachable units which can be easily exchanged	Part 10 Section 9		EDB
3	Security Interface CA0 - Specifies the use of the DVB-CI as a DAVIC Security Interface (based on the PCCard FormFactor)	Part 10 Section 10 and Section 13		EDB

 © ISO/IEC 1999 - All rights reserved

Copyright International Organization for Standardization
Provided by IHS under license with ISO
No reproduction or networking permitted without license from IHS Not for Resale

Table B4-46 — Function P10CA1: Security Tool for Conditional Access based on SmartCard

#	Description	DAVIC Clause	Additional Implementation Information	Common with Contour
1	S1 Scrambling - Describes the methodology of rendering information unintelligible to prevent use of protected material by unauthorised individuals	Part 10 Section 10.1		EDB
2	Security Interfaces - describes the approach adopted by DAVIC to put the vital security elements of the SCS on detachable units which can be easily exchanged	Part 10 Section 9		EDB
3	Security Interface CA1 - Specifies the DAVIC defined Security Interface CA1 (implemented on a ISO-7816) SmartCard	Part 10 Section 12.x		EDB

Table B4-47 — Function P10AUT: Security Tool for Authentication

#	Description	DAVIC Clause	Additional Implementation Information	Common with Contour
1	S2/S3 Authentication - A three way authentication mechanism as described in X.509. Provides mutual authentication between communicating entities in an S2 and S3 flow.	Part 10 Section 7.2.x		

Table B4-48 — Function P10DL: Security Tool for Secure Download

#	Description	DAVIC Clause	Additional Implementation Information	Common with Contour
1	Secure Download - a mechanism for protecting software and data downloads to the STU. The integrity, source and freshness of the data is protected by this mechanism; however, confidentiality of the data is not provided.	Part 10 Section 7.6.x		EDB

--`,,```,,,,````-`-`,,`,,`,`,,`---

Copyright International Organization for Standardization
Provided by IHS under license with ISO
No reproduction or networking permitted without license from IHS Not for Resale

Bibliography

[1] *Guide for ITU-T and ISO/IEC JTC 1 cooperation. Appendix II: Rules for presentation of ITU-T | ISO/IEC common text (March, 1993).*

[2] Java API, J. Gosling, F. Yellin and the Java team, *The Java Application Programming Interface, Volume 1: Core Packages*, Addison-Wesley, ISBN 0-201-63453-8

[3] Java VM, T. Lindholm and F. Yellin, *The Java Virtual machine specification,* Addison-Wesley, ISBN 0-201-63452-X

[4] RFC 1332, G. McGregor, *The PPP Internet Protocol Control Protocol (IPCP),* 05/26/1992.

[5] RFC 1483, J. Heinanen, *Multiprotocol Encapsulation over ATM Adaptation Layer 5,* 07/20/1993.

[6] RFC 1514, P. Grillo, S. Waldbusser, *Host Resources MIB,* 09/23/1993.

[7] RFC 1533, S. Alexander, R. Droms, *DHCP Options and BOOTP Vendor Extensions,* 10/08/1993.

[8] RFC 1541, R. Droms, *Dynamic Host Configuration Protocol,* 10/27/1993.

[9] RFC 1717, K. Sklower, B. Lloyd, G. McGregor, D. Carr, *The PPP Multilink Protocol (MP),* 11/21/1994.

[10] RFC 1825, R. Atkinson, *Security Architecture for the Internet Protocol,* August 1995.

[11] RFC 1826, R. Atkinson, *IP Authentication Header,* August 1995.

[12] RFC 1827, R. Atkinson , *IP Encapsulating Security Payload (ESP),* August 1995.

 © ISO/IEC 1999 - All rights reserved

--`,,```,,,,````-`-`,,`,,`,`,,`---

Copyright International Organization for Standardization
Provided by IHS under license with ISO
No reproduction or networking permitted without license from IHS

Not for Resale

ICS 35.040

Price based on 94 pages

© ISO/IEC 1999 – All rights reserved

Copyright International Organization for Standardization
Provided by IHS under license with ISO
No reproduction or networking permitted without license from IHS

Not for Resale