INTERNATIONAL STANDARD

**ISO/IEC 16500-1**

First edition
1999-12-15

# Information technology — Generic digital audio-visual systems —

## Part 1: System reference models and scenarios

*Technologies de l'information — Systèmes audiovisuels numériques génériques —*

*Partie 1: Modèles et scénarios de référence système*

Reference number
ISO/IEC 16500-1:1999(E)

© ISO/IEC 1999

Copyright International Organization for Standardization
Provided by IHS under license with ISO
No reproduction or networking permitted without license from IHS

Not for Resale

**PDF disclaimer**

This PDF file may contain embedded typefaces. In accordance with Adobe's licensing policy, this file may be printed or viewed but shall not be edited unless the typefaces which are embedded are licensed to and installed on the computer performing the editing. In downloading this file, parties accept therein the responsibility of not infringing Adobe's licensing policy. The ISO Central Secretariat accepts no liability in this area.

Adobe is a trademark of Adobe Systems Incorporated.

Details of the software products used to create this PDF file can be found in the General Info relative to the file; the PDF-creation parameters were optimized for printing. Every care has been taken to ensure that the file is suitable for use by ISO member bodies. In the unlikely event that a problem relating to it is found, please inform the Central Secretariat at the address given below.

© ISO/IEC 1999

All rights reserved. Unless otherwise specified, no part of this publication may be reproduced or utilized in any form or by any means, electronic or mechanical, including photocopying and microfilm, without permission in writing from either ISO at the address below or ISO's member body in the country of the requester.

ISO copyright office
Case postale 56 • CH-1211 Geneva 20
Tel. + 41 22 749 01 11
Fax + 41 22 734 10 79
E-mail copyright@iso.ch
Web www.iso.ch

Printed in Switzerland

--`,,```,,,,````-`-`,,`,,`,`,,`---

::

Copyright International Organization for Standardization
Provided by IHS under license with ISO
No reproduction or networking permitted without license from IHS

© ISO/IEC 1999 – All rights reserved

Not for Resale

# Contents

Page

**Foreword** ..... **v**

**Introduction** ..... **vi**

**1 Scope** ..... **1**

**2 Normative references** ..... **1**

**3 Definitions** ..... **1**

**4 Acronyms and abbreviations** ..... **5**

**5 Conventions** ..... **7**

**6 Abstract System Reference Model** ..... **7**

6.1 Abstract System Reference Model description ..... 7

6.1.1 Generic ASRM Instance Example ..... 9

6.1.2 Specific ASRM Instance Example ..... 10

6.2 Object and interface categories ..... 10

6.3 Service layers and planes ..... 12

6.4 Reference points and interfaces ..... 13

6.5 Reference point and interface template ..... 14

**7 DAVIC System Reference Model** ..... **16**

7.1 P0 Partition level DSRM ..... 16

7.2 P1 Partition level DSRM ..... 16

7.2.1 System entities ..... 17

7.2.2 Information flows ..... 18

7.2.3 Reference points ..... 19

7.3 Service Provider System ..... 20

7.3.1 Service Provider System Control Plane Elements ..... 21

7.3.2 Information Transport Service Models ..... 23

7.4 Delivery System ..... 25

7.4.1 Delivery System Elements ..... 25

7.4.2 Enhanced Broadcast Reference Model (User Plane) ..... 26

7.4.3 DAVIC System Manager Reference Model (User Plane) ..... 27

7.5 Service Consumer System ..... 27

7.5.1 Set Top Unit ..... 28

7.5.2 Human or Machine Peripheral system block ..... 29

7.5.3 Generic Service Consumer System model ..... 29

**8 DAVIC System transaction flow scenarios** ..... **29**

8.1 Functional entity definitions ..... 30

8.2 Relationship (information flow) definitions ..... 30

© ISO/IEC 1999 - All rights reserved 

Copyright International Organization for Standardization
Provided by IHS under license with ISO
No reproduction or networking permitted without license from IHS
Not for Resale

8.3 Transaction Flows ..... 31
**Annex A** (informative) **Supplementary definitions ..... 32**
**Annex B** (informative) **Acronyms and abbreviations ..... 46**
**Annex C** (informative) **Bibliography ..... 54**
**Annex D** (informative) **Interface examples ..... 55**
**Annex E** (informative) **ISO/IEC 16500 normative and informative references..... 62**

 © ISO/IEC 1999 - All rights reserved

--`,,```,,,,````-`-`,,`,,`,`,,`---

Copyright International Organization for Standardization
Provided by IHS under license with ISO
No reproduction or networking permitted without license from IHS
Not for Resale

## Foreword

ISO (the International Organization for Standardization) and IEC (the International Electrotechnical Commission) form the specialized system for worldwide standardization. National bodies that are members of ISO or IEC participate in the development of International Standards through technical committees established by the respective organization to deal with particular fields of technical activity. ISO and IEC technical committees collaborate in fields of mutual interest. Other international organizations, governmental and non-governmental, in liaison with ISO and IEC, also take part in the work.

International Standards are drafted in accordance with the rules given in the ISO/IEC Directives, Part 3.

In the field of information technology, ISO and IEC have established a joint technical committee, ISO/IEC JTC 1. Draft International Standards adopted by the joint technical committee are circulated to national bodies for voting. Publication as an International Standard requires approval by at least 75 % of the national bodies casting a vote.

Attention is drawn to the possibility that some of the elements of this part of ISO/IEC 16500 may be the subject of patent rights. ISO and IEC shall not be held responsible for identifying any or all such patent rights.

International Standard ISO/IEC 16500-1 was prepared by DAVIC (Digital Audio-Visual Council) and was adopted, under the PAS procedure, by Joint Technical Committee ISO/IEC JTC 1, *Information technology*, in parallel with its approval by national bodies of ISO and IEC.

ISO/IEC 16500 consists of the following parts, under the general title *Information technology — Generic digital audio-visual systems*:

— *Part 1: System reference models and scenarios*

— *Part 2: System dynamics, scenarios and protocol requirements*

— *Part 3: Contours: Technology domain*

— *Part 4: Lower-layer protocols and physical interfaces*

— *Part 5: High and mid-layer protocols*

— *Part 6: Information representation*

— *Part 7: Basic security tools*

— *Part 8: Management architecture and protocols*

— *Part 9: Usage information protocols*

Annexes A to E of this part of ISO/IEC 16500 are for information only.



--`,,```,,,,````-`-`,,`,,`,`,,`---
Copyright International Organization for Standardization
Provided by IHS under license with ISO
No reproduction or networking permitted without license from IHS Not for Resale

# Introduction

ISO/IEC 16500 defines the minimum tools and dynamic behavior required by digital audio-visual systems for end-to-end interoperability across countries, applications and services. To achieve this interoperability, it defines the technologies and information flows to be used within and between the major components of generic digital audio-visual systems. Interoperability between these components and between individual sub-systems is assured through specification of tools and specification of dynamic systems behavior at defined reference points. A reference point can comprise one or more logical (non-physical) information-transfer interfaces, and one or more physical signal-transfer interfaces. A logical interface is defined by a set of information flows and associated protocol stacks. A physical interface is an external interface and is fully defined by its physical and electrical characteristics. Accessible reference points are used to determine and demonstrate compliance of a digital audio-visual subsystem with this international standard.

A summary of each part follows.

ISO/IEC 16500-1 (DAVIC 1.3.1a Part 2) defines the normative digital audio-visual systems technical framework. It provides a vocabulary and a Systems Reference Model, which identifies specific functional blocks and information flows, interfaces and reference points.

ISO/IEC 16500-2 (DAVIC 1.3.1a Part 12) defines system dynamic behavior and physical scenarios. It details the locations of the control functional entities along with the normative protocols needed to support the systems behavior. It is structured as a set of protocol walk-throughs, or "*Application Notes*", that rehearse both the steady state and dynamic operation of the system at relevant reference points using specified protocols. Detailed dynamics are given for the following scenarios: video on demand, switched video broadcast, interactive broadcast, and internet access.

ISO/IEC 16500-3 (DAVIC 1.3.1a Part 14) provides the normative definition of DAVIC Technology Contours. These are strict sets of Applications, Functionalities and Technologies which allow compliance and conformance criteria to be easily specified and assessed. This part of ISO/IEC 16500 contains the full details of two contours. These are the Enhanced Digital Broadcast (EDB) and Interactive Digital Broadcast (IDB). ISO/IEC 16500-3 specifies required technologies and is a mandatory compliance document for contour implementations.

ISO/IEC 16500-4 (DAVIC 1.3.1a Part 8) defines the toolbox of technologies used for lower layer protocols and physical interfaces. The tools specified are those required to digitize signals and information in the Core Network and in the Access Network. Each tool is applicable at one or more of the reference points specified within the Delivery System. In addition a detailed specification is provided of the physical interfaces between the Network Interface Unit and the Set Top Unit and of the physical interfaces used to connect Set Top Boxes to various peripheral devices (digital video recorder, PC, printer). The physical Delivery System mechanisms included are copper pairs, coaxial cable, fiber, HFC, MMDS, LMDS, satellite and terrestrial broadcasting.

ISO/IEC 16500-5 (DAVIC 1.3.1a Part 7) defines the technologies used for high and mid-layer protocols for ISO/IEC 16500 digital audio-visual systems. In particular, this part defines the specific protocol stacks and requirements on protocols at specific interfaces for the content, control and management information flows.

ISO/IEC 16500-6 (DAVIC 1.3.1a Part 9) defines what the user will eventually see and hear and with what quality. It specifies the way in which monomedia and multimedia information types are coded and exchanged. This includes the definition of a virtual machine and a set of APIs to support interoperable exchange of program code. Interoperability of applications is achieved, without specifying the internal design of a set top unit, by a normative Reference Decoder Model which defines specific memory and behavior constraints for content decoding. Separate profiles are defined for different sets of multimedia components.

ISO/IEC 16500-7 (DAVIC 1.3.1a Part 10) defines the interfaces and the security tools required for an ISO/IEC 16500 system implementing security profiles. These tools include security protocols which operate across one or both of the defined conditional access interfaces CA0 and CA1. The interface CA0 is to all security and conditional access functions, including the high speed descrambling functions. The interface CA1 is to a tamper resistant device used for low speed cryptographic processing. This cryptographic processing function is implemented in a smart card.

ISO/IEC 16500-8 (DAVIC 1.3.1a Part 6) specifies the information model used for managing ISO/IEC 16500 systems. In particular, this part defines the managed object classes and their associated characteristics for managing the access network and service-related data in the Delivery System. Where these definitions are taken from existing standards, full reference to the required standards is provided. Otherwise a full description is integrated in the text of this part. Usage-related information model is defined in ISO/IEC 16500-9.

 © ISO/IEC 1999 - All rights reserved

--`,,```,,,,````-`-`,,`,,`,`,,`---
Copyright International Organization for Standardization
Provided by IHS under license with ISO
No reproduction or networking permitted without license from IHS Not for Resale

ISO/IEC 16500-9 (DAVIC 1.3.1a Part 11) specifies the interface requirements and defines the formats for the collection of usage data used for billing, and other business-related operations such as customer profile maintenance. It also specifies the protocols for the transfer of Usage Information into and out of the ISO/IEC 16500 digital audio-visual system. In summary, flows of audio, video and audio-visual works are monitored at defined usage data collection elements (e.g. servers, elements of the Delivery System, set-top boxes). Information concerning these flows is then collected, processed and passed to external systems such as billing or a rights administration society via a standardised usage data transfer interface.

## Additional Information

ISO/IEC TR 16501 is an accompanying Technical Report. Further architectural and conformance information is provided in other non-normative parts of DAVIC 1.3.1a (1999). A summary of these documents is included here for information.

ISO/IEC TR 16501 (DAVIC 1.3.1a Part 1) provides a detailed listing of the functionalities required by users and providers of digital audio-visual applications and systems. It introduces the concept of a contour and defines the IDB (Interactive Digital Broadcast) and EDB (Enhanced Digital Broadcast) functionality requirements which are used to define the normative contour technology toolsets provided in ISO/IEC 16500-3.

DAVIC 1.3.1a Parts 3, 4 and 5 are DAVIC technical reports. They provide additional architectural and other information for the server, the delivery-system, and the Service Consumer systems respectively. Part 3 defines how to load an application, once created, onto a server and gives information and guidance on the protocols transmitted from the set-top user to the server, and those used to control the set-up and execution of a selected application. Part 4 provides an overview of Delivery Systems and describes instances of specific DAVIC networked service architectures. These include physical and wireless networks. Non-networked delivery (e.g. local storage physical media like discs, tapes and CD-ROMs) are not specified. Part 5 provides a Service Consumer systems architecture and a description of the DAVIC Set Top reference points defined elsewhere in the normative parts of the specification.

DAVIC 1.3.1a Part 13 is a DAVIC technical report, which provides guidelines on how to validate the systems, technology tools and protocols through conformance and / or interoperability testing.

© ISO/IEC 1999 - All rights reserved


--`,,```,,,,````-`-`,,`,,`,`,,`---

Copyright International Organization for Standardization
Provided by IHS under license with ISO
No reproduction or networking permitted without license from IHS
Not for Resale

--`,,```,,,,````-`-`,,`,,`,`,,`---

Copyright International Organization for Standardization
Provided by IHS under license with ISO
No reproduction or networking permitted without license from IHS

Not for Resale

# Information technology — Generic digital audio-visual systems — Part 1: System reference models and scenarios

## 1 Scope

This part of ISO/IEC 16500 describes an Abstract System Reference Model (ASRM) at the highest level first and then creates a specific instance of this abstract model to define the DAVIC System Reference Model (DSRM). The ASRM and DSRM are not intended to indicate preferred implementations of the DAVIC System; but are to be used as a tool to guide the definition of DAVIC specifications. Additionally, as DAVIC specifications are issued, the reference models can be used to aid the development and implementation of DAVIC-compliant systems and products.

## 2 Normative references

ISO/IEC 16500-1 does not contain any normative references.

See Annex C and Annex E for a list of documents referenced in ISO/IEC 16500.

## 3 Definitions

This clause defines new terms, and the intended meaning of certain common terms, used in this part of ISO/IEC 16500. Annex A defines additional terms and, in some cases, alternative interpretations that are appropriate in other contexts. For convenience, the normative definitions below are included in the annex.

**3.1 Access Node:** the element of the Access Network containing centralized functions responsible for processing information flows in preparation for transport through the selected distribution network.

**3.2 Application Service Layer (SL1):** a collection of associated objects that use or provide an application service to peers and to SL0 client objects, e.g., application control such as audio/video stream playback functions and ISP-provided applications such as L1GW services.

**3.3 application:** a set of objects that provides an environment for processing Application Service Layer information flows.

**3.4 behavior:** in SDL, behavior is either:
a) externally observable behavior: the set of sequences of responses of a system to sequences of stimuli, or
b) internally observable behavior: a set of actions and tasks, triggered by a stimulus, executed before the state machine transitions to another state.

**3.5 block:** a part of a system or parent block that is the container for one or more processes of one block substructure. A block is a scope unit and provides a static interface. When used by itself, block is a synonym for block instance.

**3.6 call:** (in signaling) an association between two or more users, or between a user and a network entity, that is established by use of network capabilities. This association may have zero or multiple information exchange mechanisms established within this call, for example in connection-oriented or in connectionless modes.

**3.7 channel:** a connection conveying signals between two blocks (the conveyed signals represent information). Channels also convey signals between a block and the environment. Channels may be unidirectional or bi-directional.

**3.8 client:** a service consuming object or system (block); (a synonym for **user**).

**3.9 conditional access:** a means of allowing system users to access only those services that are authorized to them.

**3.10 connect:** indicates the connection of a channel to one or more signal routes or the interconnection of signal routes.



--`,,```,,,,````-`-`,,`,,`,`,,`---

Copyright International Organization for Standardization
Provided by IHS under license with ISO
No reproduction or networking permitted without license from IHS Not for Resale

**3.11 connection:** an association of transmission channels or circuits, switching and other functional units set up to provide a means for a transfer of user, control and management information between two or more end points (blocks) in a telecommunications network.

**3.12 Connectivity Entity:** the Connectivity Entity is responsible for the error-free receipt and transmission of content flow information to and from the STU.

**3.13 content-information:** information that does not alter the state of the object intercepting the information flow, e.g., audio, video, or data in a television program that is processed transparently by a television receiver (the control state of the receiver will not change as a result of such information)

**3.14 control-information:** information that may change the state of the object intercepting the information flow, e.g., a remote control channel up command input. (In some cases an object may interpret a message but reject a request and remain in its current state.)

**3.15 Control Plane (CP):** a classification for objects that interact to establish, maintain, and release resources and provide session, transport, and connection control functions that facilitate transparent information transfers between ISP clients.

**3.16 Content Provider:** one who owns or is licensed to sell content.

**3.17 Content Service Element:** the Content Service Element provides the processing required by the Service Provider System when content-information is being loaded to the server.

**3.18 Core Network:** a portion of the Delivery System composed of networks, systems, equipment and infrastructures, connecting the Service Providers to the Access Networks.
NOTE: The term Core Network, in the DAVIC use, is wide sense as it includes the notion of the access networks that are needed to link the Service Providers Systems to the Core Network in strict sense (i.e., exclusive of any access network).

**3.19 Delivery System (DS):** the portion of the DAVIC System that enables the transfer of information between DS-users.

**3.20 Distribution Network:** a collection of equipment and infrastructures that delivers information flows from the Access Node to the Network Termination elements of the Access Network.

**3.21 domain:** a scope that delimits (makes clear what is included and what is not) the extent of influence of one object on another. Domain boundaries may represent regulatory, ownership, span-of-control and other influence factors.

**3.22 End-Service Consumer (ESC):** a user, either human or machine, whose primary interaction with the system is through the STU.

**3.23 End-Service Consumer System (ESCS):** a system that (predominantly) consumes information. ESCSs are ISPS and ESPS clients. The ESCS includes the STU and the ESC.

**3.24 End-Service Provider (ESP):** an entity with jurisdiction over a domain that contains a system that (predominantly) provides information to clients.

**3.25 End-Service Provider System (ESPS):** a system that (predominantly) provides information to clients. ESPSs are ISPS clients and may also be clients of other ESPSs. ESPSs consist of hardware and software sub-systems that use ISP services to provide video and multimedia services to ESCSs.

**3.26 environment:** a synonym for the environment of a system. Also when context allows, it may be a synonym for the environment of a block, process, procedure, or service.

**3.27 Environment Entity:** this entity is responsible for establishing and terminating the environment in which an application will operate. This environment includes the quality of service requirements for both the application and product entities.

**3.28 error:** an error occurs during the interpretation of a valid specification of a system when one of the dynamic conditions of SDL is violated. Once an error has occurred, the subsequent behavior of the system is not defined.

**3.29 function:** features of a Digital Audio-Visual System that are realized through Services. For example, interactive play control (VCR-type controls) is a function. (See also **service**).

 © ISO/IEC 1999 - All rights reserved

--`,,```,,,,````-`-`,,`,,`,`,,`---

Copyright International Organization for Standardization
Provided by IHS under license with ISO
No reproduction or networking permitted without license from IHS Not for Resale

**3.30 information flow:** the transfer of information from an information-source-object to an information-destination-object.

**3.31 instance:** the definition of an object with all its properties. An instance of a type is an object which has all the properties of the type as given in the type definition.

**3.32 interface:** a point of demarcation between two blocks through which information flows from one block to the other. See logical and physical interface definitions for further details. A DAVIC interface may be physical-interface or a logical-interface.

**3.33 Intermediate-Service Provider (ISP):** ISPs provide adjunct services and convey information among ESPs and ESCs.

**3.34 layer:** a collection of objects of the same hierarchical rank.

**3.35 logical interface:** an interface where the semantic, syntactic, and symbolic attributes of information flows is defined. Logical interfaces do not define the physical properties of signals used to represent the information. A logical interface can be an internal or external interface. It is defined by a set of information flows and associated protocol stacks.

**3.36 Management Entity:** the Management Entity is responsible for the operation and maintenance functions of a network. Several instances of information flow S5 exist for the Management entity.

**3.37 Management Plane (MP):** a plane that contains those interfaces and functions which support interactions which may be typified as being temporally disjoint from an off-hook interaction. Interactions among Management Plane objects may also occur concurrently with an off-hook interaction.

**3.38 management-information:** information exchanged by Management Plane objects; may be content-information or control-information.

**3.39 name:** a lexical unit used to name SDL objects.

**3.40 Network Interface Unit (NIU):** the NIU accepts network specific content-information flows from the Delivery System and provides a non-network specific interface to the Connectivity Entity in the STU. (additional definitions of the NIU may exist.

**3.41 Network Related Control:** the Network Related Control entity provides control functions for network configuration, connection establishment and termination and information routing in a network instance of a Delivery System.

**3.42 Network Service Access Point (NSAP):** an interface between SL2 Session and Transport Service Layer and SL3 **Network Service Layer** objects through which the SL3 (server) objects provide services to the SL2 (client) object.

**3.43 Network Service Layer (SL3):** a collection of objects that enable client objects to communicate with remote peers: SL3 objects provide basic lower-layer network services such as addressing/routing, connection services, and physical layer services to SL2 clients.

**3.44 Network Termination (NT):** the element of the Access Network performing the connection between the infrastructure owned by the Access Network operator and the Service Consumer System (ownership decoupling). The NT can be passive or active, transparent or not.

**3.45 network:** a collection of interconnected elements that provides connection services to users.

**3.46 partition:** a decomposition or subdivision of an object into smaller objects; the created objects are peers with respect to each other, but are hierarchically subordinate to the original partitioned object.

**3.47 partitioning:** the subdivision of a unit into smaller components which when taken as a whole have the same behavior as the original unit. Partitioning does not affect the static interface of a unit.

**3.48 peer:** of the same rank or order: peer objects belong to the same layer (category or classification).

**3.49 physical interface:** an interface where the physical characteristics of signals used to represent information and the physical characteristics of channels used to carry the signals are defined. A physical interface is an external interface. It is fully defined by its physical and electrical characteristics. Logical information flows map to signal flows that pass through physical interfaces.



Copyright International Organization for Standardization
Provided by IHS under license with ISO
No reproduction or networking permitted without license from IHS Not for Resale

**3.50 plane:** a category that identifies a collection of related objects, e.g., objects that execute similar or complementary functions; or peer objects that interact to use or to provide services in a class that reflects authority, capability, or time period. Management-plane service objects, for example, may authorize ISP-clients' access to certain control-plane service objects that in turn may allow the clients to use services provided by certain user-plane objects.

**3.51 port:** an abstraction used by transport protocols to distinguish among multiple destinations associated with particular applications running on a host computer: an application can specify the ports it wants to use; some ports are reserved for standard applications/services such as e-mail (also known as well-known ports).

**3.52 Principal Service Layer (SL0):** a collection of associated objects that interact with peers to use or provide principal service, e.g., sending or receiving and presenting content-information such as movies, music, or stock market data to the end information users (human or machine); SL0 objects rely on services provided by SL1 objects.

**3.53 principal service:** the top service class of peer objects interacting in some defined context.

**3.54 process:** a communicating extended finite state machine. Communication can take place via signals or shared variables. The behavior of a process depends on the order of arrival of signals in its input port.

**3.55 Product Entity:** the entity in the STU responsible for accepting transparent content-information and presenting the information to the appropriate using machine.

**3.56 protocol:** set of message formats (semantic, syntactic, and symbolic rules) and the rules for message exchange between peer layer entities (which messages are valid when).

**3.57 provider:** an object that interacts with clients or users.

**3.58 reference point:** a set of interfaces between any two related blocks through which information flows from one block to the other. A reference point comprises one or more logical (non-physical) information-transfer interfaces, and one or more physical signal-transfer interfaces.

**3.59 S1:** content-information flow, from a source to a destination object on the User Plane of any service layer.

**3.60 S2:** control-information flow from a source to a destination object on the Control Plane of the Application Service Layer (SL1).

**3.61 S3:** control-information flow from a source to a destination object on the Control Plane of the Session and Transport Service Layer (SL2).

**3.62 S4:** control-information flow from a source to a destination object on the Control Plane of the Network Service Layer (SL3).

**3.63 S5:** management-information flow from a source to a destination object on the Management Plane of the container object: the objects may be peers (service layer is known), or the service layer may be unspecified.

**3.64 server:** any service providing system.

**3.65 service:** a set of elementary streams offered to the user as a program. They are related by a common synchronization. They may be made of different data, eg. video, audio, subtitles, other data.

**3.66 service layer:** a set of **service object**s of the same hierarchical rank.

**3.67 service object:** an object characterized in terms of the services it uses or provides, and not in terms of the physical attributes: different real systems may use or provide identical services.

**3.68 Service Provider:** an entity that provides a service to a client.

**3.69 Service Related Control:** an entity that provides all control functions for the services that are offered by a network instance of the Delivery System. The DSRM allows for SL0, SL1 and SL2 Service Related Control subsets.

**3.70 Session and Transport Service Layer (SL2):** a collection of objects that interact to establish and maintain an environment for local or remote application-layer services; client of network services when remote services are used or provided: SL2 objects provide session services over reliable transport to SL1 clients.

 © ISO/IEC 1999 - All rights reserved

Copyright International Organization for Standardization
Provided by IHS under license with ISO
No reproduction or networking permitted without license from IHS Not for Resale

**3.71 Session Control Function:** this entity, in a Service Provider System, is responsible for establishing and terminating the environment in which an application will operate. This environment includes the quality of service requirements for both the application and product entities.

**3.72 Session Service Access Point (SSAP):** an interface between an Application Service Layer and a Sessions and Transport Service Layer through which SL2 (server) objects provide services to SL1 (client) objects.

**3.73 session services:** provide basic functions to create, modify, maintain, and tear down sessions (negotiate and allocate network resources).

**3.74 session:** an interval during which a logical, mutually agreed correspondence between two objects exists for the transfer of related information. A session defines a relationship between the participating users in a service instance.

**3.75 Set Top Box (STB):** a module that comprises both Set Top Unit (STU) and Network Interface Unit (NIU) functional elements. The STB may be either “integrated” or “modular”. An integrated STB is designed for connection to a single DAVIC A1 or equivalent interface. A modular STB may be equipped with a DAVIC A0 or equivalent interface to enable connection of a range of NIUs.

**3.76 Set Top Unit (STU):** a module that contains the “network independent” functionalities of a Set Top Box (STB). The following functionalities are contained in a typical STU:- Processing & Memory Functions; MPEG2 Demux & AV Decoders; Graphics Display; Modulator Output for TV; Peripheral Interfaces.

**3.77 signal:** an instance of a defined signal type representing information meaningful to a process instance.

**3.78 specification:** a definition of the requirements of a system. A specification consists of general parameters required of the system and the functional specification of its required behavior. Specification may also be used as a shorthand for specification and/or description, e.g., in SDL specification or system specification.

**3.79 Stream Service Element:** this Service Provider System entity allows for the processing of the content-information flows at the stream level. The content stream is a sub-set of the actual content-information flow and processing at the stream level allow the ability to uniquely align a service offering.

**3.80 subsystem:** a decomposition of a system into smaller collections of objects; decomposition may be performed recursively.

**3.81 system:** a collection of interacting objects that serves a useful purpose; typically, a primary subdivision of an object of any size or composition (including domains).

**3.82 transparent information:** information that is not significant semantically to an object used to transport the information.

**3.83 type:** a set of properties for instances. Examples of types in SDL include blocks, processes, services, signals, and systems. [1]-mod.

**3.84 User Plane (UP):** a classification for objects whose principal function is to provide transfer of (end) user information: user information may be user-to-user content (e.g., a movie), or private user-to-user data.

**3.85 user:** a service consuming object or system (block).

# 4 Acronyms and abbreviations

This clause defines the acronyms and abbreviations used in this part of ISO/IEC 16500. Annex B defines acronyms and abbreviations used within ISO/IEC 16500. For convenience, the definitions below are included in the annex.

| | |
|---|---|
| AAL | ATM Adaptation Layer |
| ADSL | Asymmetric Digital Subscriber Line |
| AE | Application Entity |
| AN | Access Network, or |
| ANSI | American National Standards Institute |
| API | Application Programming Interface |
| ASAP | Application(-Service-Layer) Service Access Point |
| ASE | Application Service Element |



Copyright International Organization for Standardization
Provided by IHS under license with ISO
No reproduction or networking permitted without license from IHS Not for Resale

| | |
|---|---|
| ASN.1 | Abstract Syntax Notation 1 |
| ASRM | Abstract System Reference Model |
| ATM | Asynchronous Transfer Mode |
| BasicL1GW | Basic Level 1 Gateway |
| CCITT | Comité Consultatif International Telegraphique et Telephonique |
| CLNP | Connectionless Network Protocol |
| CMIP | Common Management Information Protocol |
| CP | Control Plane |
| CPS | Content Provider System |
| DIS | Draft International Standard |
| DS | Delivery System, or |
| DSM-CC | Digital Storage Media - Command and Control |
| DSRM | DAVIC System Reference Model |
| ECM | Entitlement Control Message |
| EMM | Entitlement Management Message |
| EnhancedL1GW | Enhanced Level 1 Gateway |
| ESC | End Service Consumer |
| ESCS | End-Service Consumer System |
| ESP | End Service Provider |
| ESPS | End-Service Provider System |
| GIOP | Generic Inter-ORB Protocol |
| HDTV | High Definition Television |
| IDL | Interface Definition Language |
| IEC | International Electrotechnical Commission |
| IIOP | Internet Inter-ORB Protocol, or<br>Internet Inter-Object Protocol |
| IP | Internet Protocol |
| IPR | Intellectual Property Rights |
| ISO | International Organization for Standardization |
| ISP | Intermediate Service Provider |
| ITU | International Telecommunications Union |
| L1GW | Level 1 Gateway |
| L2GW | Level 2 Gateway |
| MHEG | Multimedia and Hypermedia information coding Experts Group |
| MP | Management Plane |
| MPEG | Moving Picture Experts Group |
| NIF | Network Interface Function |
| NIU | Network Interface Unit |
| NMS | Network Management System |
| NNI | Network Node Interface |
| NSAP | Network Service Access Point |
| NT | Network Termination |
| OAM | Operation Administration and Maintenance |
| OMG | Object Management Group |
| OS | Operating System |
| OSB | Output Signal Balance |
| OSI | Open Systems Interconnection (Reference Model) |
| PES | Packetized Elementary Stream |
| RPC | Remote Procedure Call |
| SAAL | Signaling ATM Adaptation Layer |
| SAP | Service Access Point |
| SC | Scrambling |
| SCS | Service Consumer System |
| SDL | Specification and Description Language, or |
| SGW | Service Gateway |
| SL0 | Principal Service Layer identifier |
| SL1 | Application Service Layer identifier |
| SL2 | Session and Transport Service Layer identifier |
| SL3 | Network Service Layer identifier |

 © ISO/IEC 1999 - All rights reserved

Copyright International Organization for Standardization
Provided by IHS under license with ISO
No reproduction or networking permitted without license from IHS
Not for Resale

| | |
|---|---|
| SNMP | Simple Network Management Protocol |
| SPS | Service Provider System |
| SSAP | Session Service Access Point |
| SSCF | Service Specific Coordination Function |
| SSCOP | Service Specific Connection Oriented Protocol |
| STB | Set-Top Box |
| STU | Set-Top Unit |
| TBD | To be defined |
| TC | Transmission Convergence |
| TCP | Transmission Control Protocol |
| TDMA | Time Division Multiple Access |
| TMN | Telecommunication Management Network |
| TSB | Telecommunication Standardization Bureau |
| TV | Television |
| UDP | User Datagram Protocol |
| UNI | User-Network Interface |
| UNO | Universal Networked Object |
| UP | User Plane |
| VASP | Value-Added Service Provider |
| VCR | Video Cassette Recorder |
| VOD | Video-On-Demand |

# 5 Conventions

The style of this part of ISO/IEC 16500 follows the *Guide for ITU-T and ISO/IEC JTC 1 cooperation. Appendix II: Rules for presentation of ITU-T | ISO/IEC common text* (March 1993*).*

# 6 Abstract System Reference Model

This clause describes an Abstract System Reference Model (ASRM ) that establishes a set of basic building blocks and relationships that are used in clause 7 to develop the DAVIC System Reference Model (DSRM). The ASRM is a hierarchical model that allows the external behavior of a set of system blocks at a given partition level to be described completely by characterizing their external interfaces. Interface descriptions capture all essential properties of interacting objects including all logical information flows and protocols used to communicate, as well as physical signals and channel characteristics used to represent and convey information between blocks. As much detail as is necessary to define a relationship may be represented by the ASRM by partitioning system blocks to any desired depth.

## 6.1 Abstract System Reference Model description

Figure 6.1-1 shows the overall Abstract System Reference Model at the highest level. The ASRM is organized as a hierarchical structure. The hierarchical partitions are labeled *P0, P1, P2…* in the figure. Each partition represents an abstraction level that masks the details of hierarchically-lower levels. The partitioning process may be applied recursively to any desired depth to reveal all necessary details that define a system's interfaces and behavior.



Copyright International Organization for Standardization
Provided by IHS under license with ISO
No reproduction or networking permitted without license from IHS Not for Resale

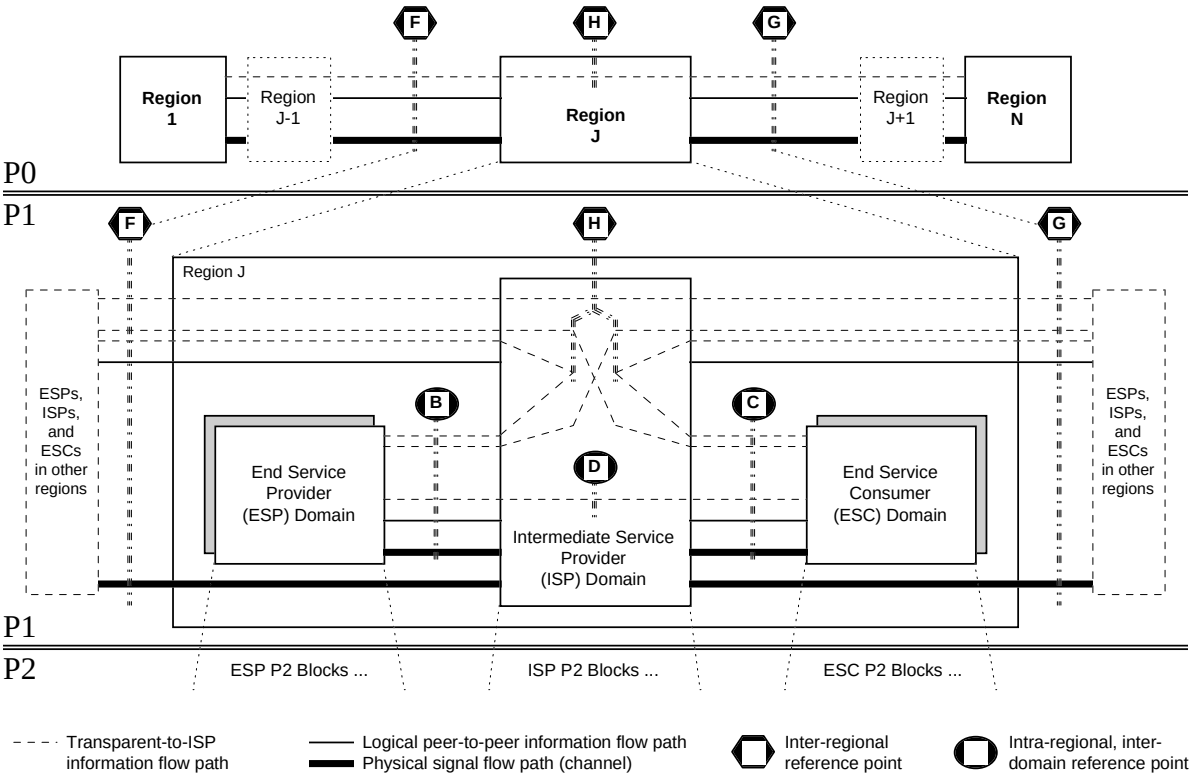


**Figure 6.1-1 — Abstract System Reference Model**

The P0 partition in Figure 6.1-1 is the highest abstraction level used in the ASRM to delimit objects on the basis of regulatory domains. At this level, the complete DAVIC System is seen as an array of blocks, named *regions*, joined by lines representing information flows from one block to another. The boundaries of regulatory domains are determined by national or regional laws and regulations. Where necessary, large regions may be subdivided into sub-regions on the basis of geographical, political, business, technological, or other factors.

### Reference points

A reference point represents a set of interfaces between any two related blocks through which information flows from one block to the other. A reference point comprises one or more logical (non-physical) information-transfer interfaces, *and* one or more physical signal-transfer interfaces. Physical signals flow from one block to another through one or more channels connecting the blocks. The signals represent the information transferred through logical interfaces in some appropriate manner.

Reference Points F and G represent sets of interfaces carrying information between adjacent regions. Reference Point H represents interfaces through which transparent information flows from one side of Region J to the other.

### Information flows and flow paths

The model depicts a general case where information flows between Region 1 and Region N via an intermediate Regions J. Region 1 is simply the first subdivision block of the DAVIC System, and Region N is the last identified block in the model. *N* can be any value.

The Region-J block represents any intermediate block through which information flows transparently between objects in Region 1 and Region N. Information may originate from, terminate in, or pass transparently through Region J. Regions J-1 and J+1 illustrate cases with information flow paths that comprise two or more segments.

### Partition level P1 blocks

The P1-partition-level magnified view of Region J shown in Figure 6.1-1 illustrates different types of information flows through reference points. Reference Point H includes interfaces through which information passes from one side of the ISP to the other, interfaces that reflect information flows between a Region-J object and an object in

 © ISO/IEC 1999 - All rights reserved

--`,,```,,,,````-`-`,,`,,`,`,,`---

Copyright International Organization for Standardization
Provided by IHS under license with ISO
No reproduction or networking permitted without license from IHS
Not for Resale

another region. (Non-transparent inter-regional information flows that originate or terminate at the ISP are defined at Reference Point F or G, but not at H.)

Each region may contain different configurations of objects that are not visible at the P0 partition level but do become visible at the P1 partition level. The expanded view of Region J in Figure 6.1-1 shows that, in this case, the region contains three objects:

- End-Service Provider (ESP), an
- Intermediate-Service Provider (ISP) and an
- End-Service Consumer (ESC).

There may be more than one instance of each object type in a region. The model represents a set of possible relationships for a representative ESP, ISP, and ESC triplet.

Reference Point B represents a set of ESP-ISP interfaces that are local to the region and a set of ESP interfaces to objects in other regions. External ESP interfaces map to Reference Points F or G: via H.

Reference Point C represents a set of ISP-ESC interfaces that are local to the region and a set of ESC interfaces to objects in other regions. External ESC interfaces map to Reference Points F or G: via H.

Reference point D represents a set of interfaces between ESPs and ESCs in the same region. Information flowing through Reference Point D is transparent to the ISP.

Reference Point H represents transparent information-flow interfaces through the ISP. The flows may originate or terminate in the region at an ESP or an ESC, or they may pass solely through the ISP.

### 6.1.1 Generic ASRM Instance Example

A generic ASRM instance example of a region that reveals some possible P1 and P2-partition objects is shown in Figure 6.1-2. The model subdivides the ESP, ISP, and ESC (P1-partition objects) into two categories: Principal-Service and Communication-Service (P2-partition objects). The first category contains objects whose primary function is to provide end-to-end services to peers. The second category contains objects whose primary function is to support the communication needs of the Principal-Service objects. Reference point E represents a set of interfaces within the Communications Service Objects block through which transparent-to-ISP information flows between the ESP and ESC clients of the ISP.

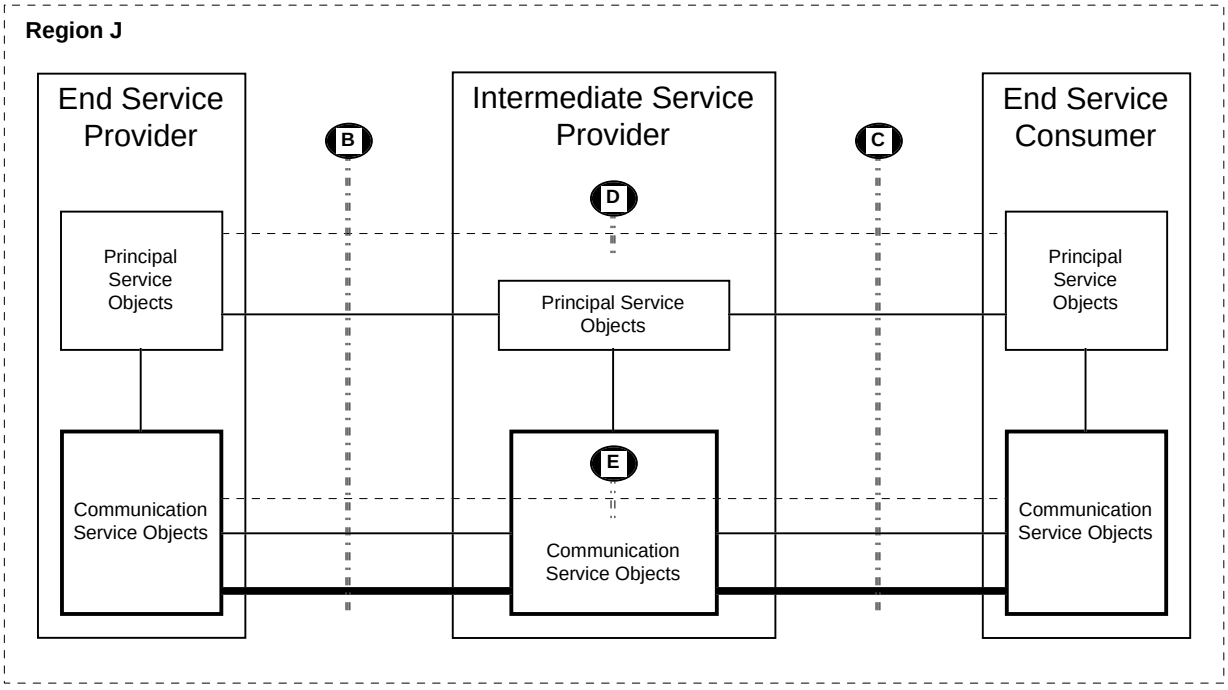


**Figure 6.1-2 — Generic ASRM instance example**



Copyright International Organization for Standardization
Provided by IHS under license with ISO
No reproduction or networking permitted without license from IHS Not for Resale

### 6.1.2 Specific ASRM Instance Example

An example of how the ASRM may be used to represent various P2-partition subsystems in a Video-on-Demand (VOD) instance is shown as Figure 6.1-3. The example is intended to illustrate a simple application of the ASRM and does not reflect any particular or a preferred VOD-service configuration. Note the progression from abstract object names to more specific names that are meaningful in a given context. The example illustrates how abstract views may be replaced by more concrete views while the general shape and relationships of the abstract model are preserved. Retaining the basic form and interfaces of the ASRM allows different parts of a complex model to be defined in greater detail while safeguarding fundamental relationships among larger container objects.

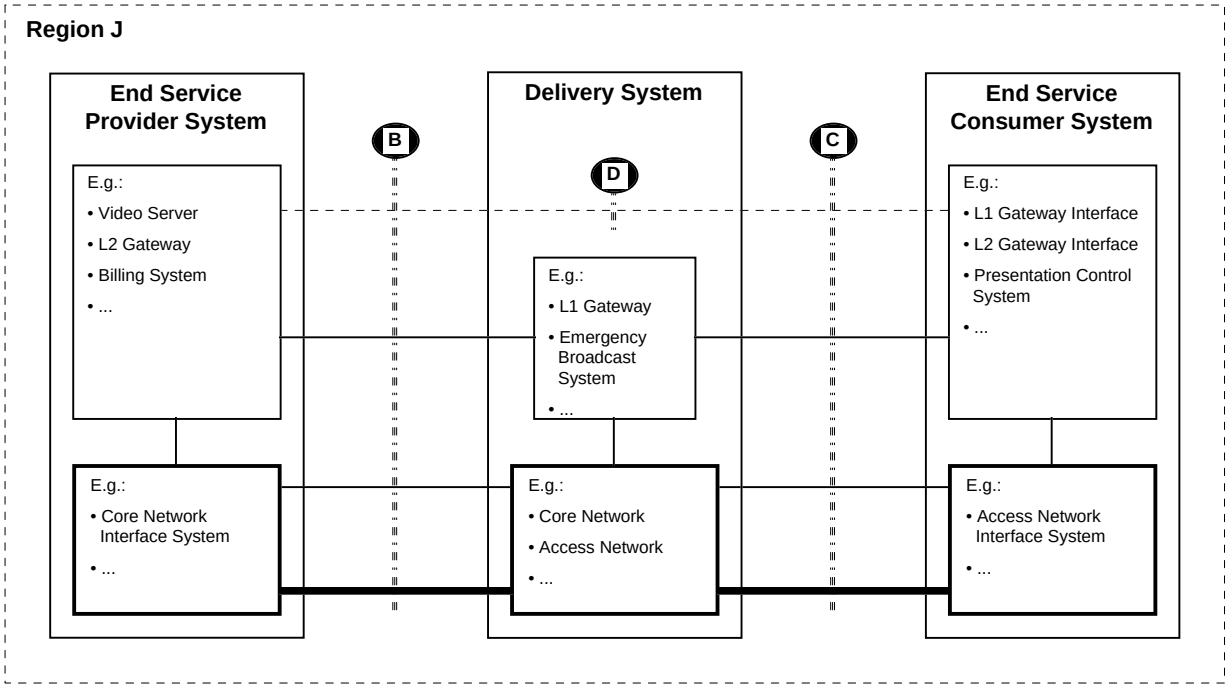


**Figure 6.1-3 — VOD instance example**

## 6.2 Object and interface categories

Figure 6.2-1 shows an object that contains smaller objects classified into user, control, and management categories. In the ASRM, each category maps to a plane.

To keep the ASRM as simple as possible, peer-to-peer information exchanges can occur only between objects in the same category (plane).

All external interfaces that are specified must be specified fully, including all protocol stacks required to support the information transfer needs of objects on the U, C, and M planes.

 © ISO/IEC 1999 - All rights reserved

Copyright International Organization for Standardization
Provided by IHS under license with ISO
No reproduction or networking permitted without license from IHS
Not for Resale

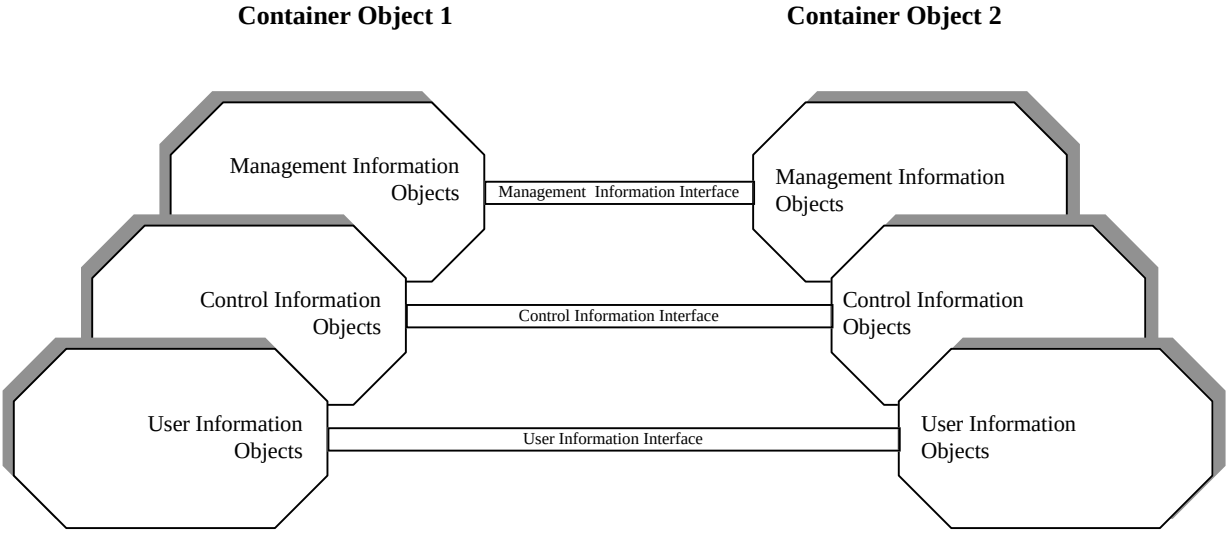


**Figure 6.2-1 — Object and interface categories**

Three logical interface categories are defined in the ASRM: User, Control, Management. Each logical interface must map to a physical interface if information transfer between objects is to take place. The ASRM classifies all physical interfaces into one category. In the model, a given logical interface category may be null if there are no objects in the system assigned to that category. In such cases, the category is null.

The logical interface categories in the ASRM are:

### User Plane interface category

The User Plane interface category provides for transparent user information flow transfer between objects. The transfer of information is significant only to the sender and receiver objects. Only those characteristics of the signal necessary to convey the signals from source to destination need to be known publicly. To what use such information is put is known only to the sender and receiver(s) of the information. In the case of multimedia services or applications, user information may be user-to-user content (e.g., a movie, bulk data download as part of a service application), or private user-to-user data.

### Control Plane interface category

The Control Plane interface category provides for the flow of information between control objects in any protocol layer. In the case of network protocol layers, performs the call control and connection control functions (e.g., network connection control). It deals with the signaling necessary to set up, supervise and release calls and connections (e.g., Set Top Unit to Service Provider System connect sequence).

### Management Plane interface category

The Management Plane interface category provides for the flow of information between management objects in any protocol layer. It performs management functions (e.g., fault, configuration, accounting, performance, security) related to the system as a whole and provides coordination between all interface categories. In addition, it performs management functions (e.g., meta-signaling, operations and maintenance information flows) relating to resources and parameters residing in the protocol layers of the other categories.

### Physical interface category

The physical interface category represents the physical description of the interface (e.g., the properties of the directly interconnected physical components).



Copyright International Organization for Standardization
Provided by IHS under license with ISO
No reproduction or networking permitted without license from IHS Not for Resale

## 6.3 Service layers and planes

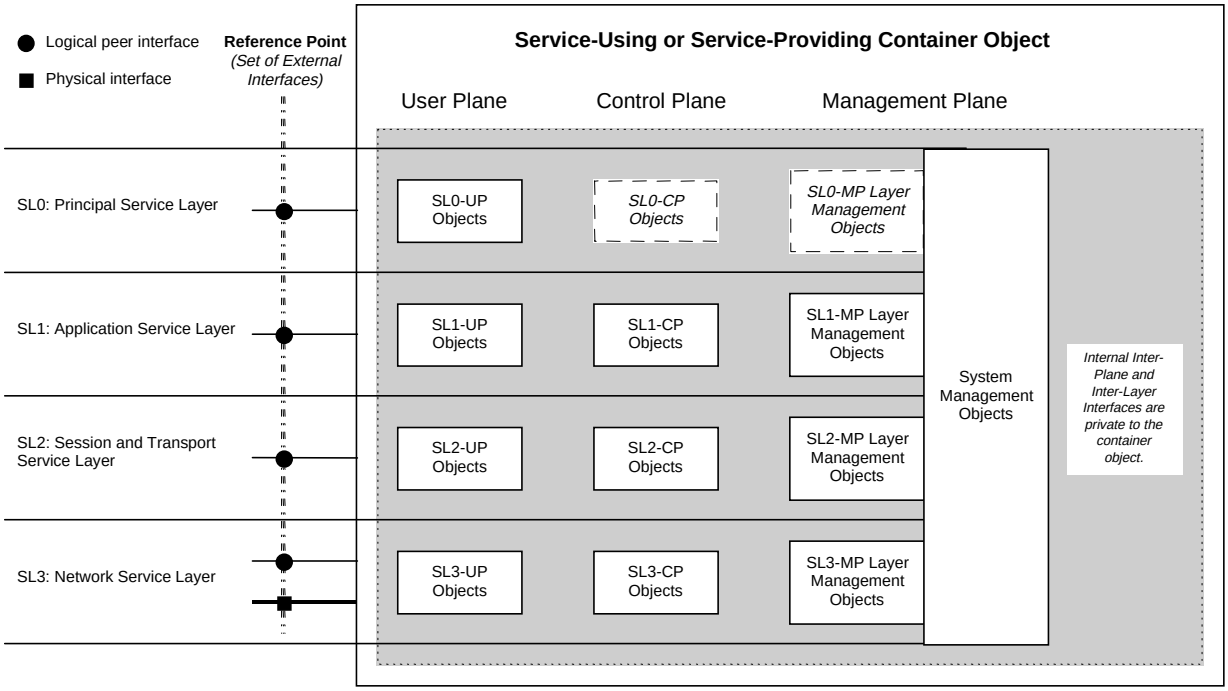


**Figure 6.3-1 — Service layers and planes**

### Container object partitions

Service layers are partitions of a container object. A service layer contains a set of objects that interact with peers in another block (a container object in the same or in another system) to use or perform services for one another. A service-layer-view of an object focuses primarily on properties that are important for peer-to-peer interactions and not on how the objects are implemented.

User, Control, and Management Planes provide a second dimension for categorizing objects based on their functional capabilities.

### Container object external interfaces

Each service layer has an external interface through which all logical peer-to-peer service interactions occur. Service interactions consist of sequences of information flows from an information source object in one container object sending a message to an information destination object in another container object. There may be user, control, or management information flows through any given interface if the service layer contains objects assigned to corresponding planes. Each such information flow constitutes a logical communication channel between interacting peers.

Signals representing logical information flows between objects, in any service layer or plane, flow from one container object to another through each object's SL3 external physical interface.

The set of external logical interfaces together with the external physical interface constitutes a reference point between two container objects through which all information flows take place, and therefore, through which all services are exchanged.

Four service layers are shown in Figure 6.3-1:

#### SL0: Principal Service Layer

These are the principal services used to achieve some fundamental purpose. SL0 objects are local SL1 service clients.

 © ISO/IEC 1999 - All rights reserved

Copyright International Organization for Standardization
Provided by IHS under license with ISO
No reproduction or networking permitted without license from IHS
Not for Resale

NOTE: No SL0-CP or SL0-MP objects are defined in this international standard at this time. The dashed outline blocks shown in Figure 6.3-1 are placeholders to indicate where such objects would go if the scope of the international standard included them.

### SL1: Application Service Layer

Application services are resources that support the needs of the principal Service Consumers and service providers. Application services may be local to a domain, or may use remote services provided by a service object in another domain. Application services have a logical peer interface and use SL2 services to communicate.

### SL2: Session and Transport Service Layer

Session and transport services establish and maintain end-to-end communication capabilities for SL1 clients.

### SL3: Network Service Layer

The Network Service Layer is the only layer that has physical communication links to other systems. All logical peer-service interaction information is carried in physical channels that interconnect SL3 service objects in linked domains.

## 6.4 Reference points and interfaces

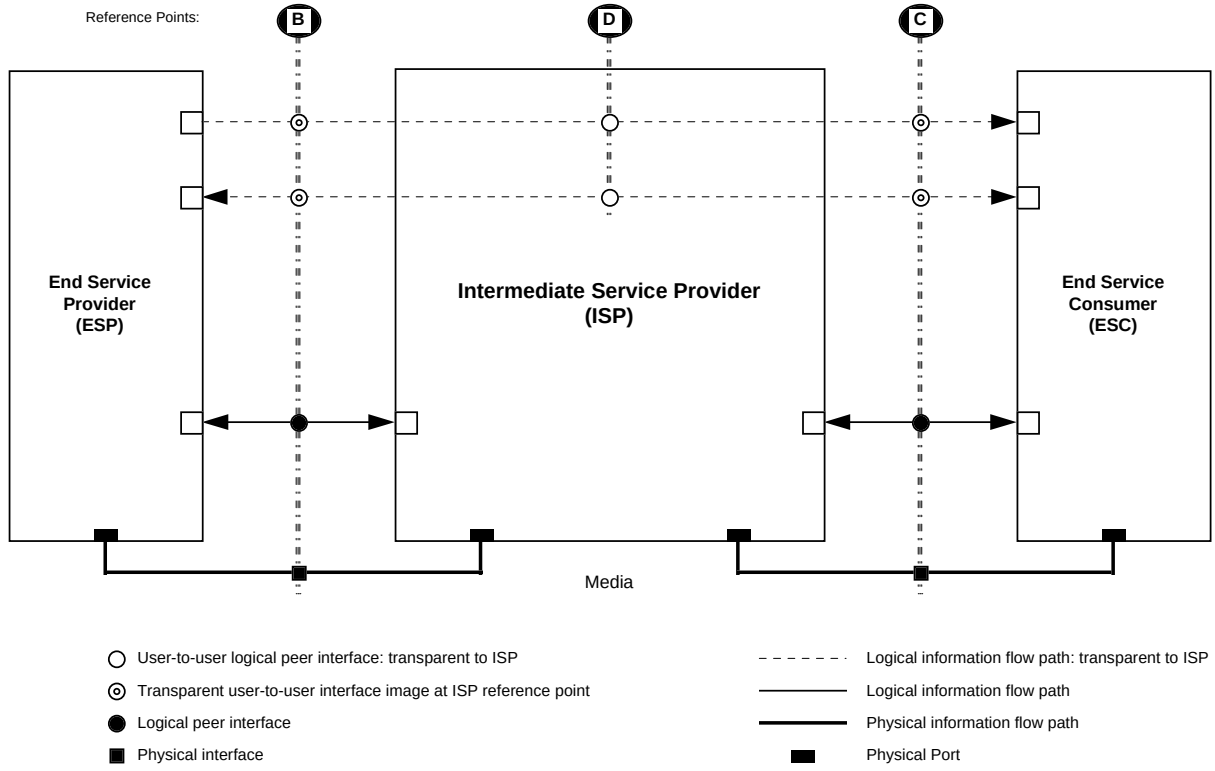


**Figure 6.4-1 — Reference points and interfaces**

Figure 6.4-1 illustrates the relationship between reference points and logical and physical interfaces. A reference point is a named set of defined interfaces through which information sources can transfer information to information sinks. To ensure interoperability, interacting systems must comply with the functional requirements and with the interface requirements specified at a given reference point for a given set of services.

The following factors determine the relationships in a series of interfaces that intercept a given information flow:

- Semantics of the information flow (meaning of the information to intercepting objects): Is the information identical at all interfaces? Is it significant to an intercepting object?



Copyright International Organization for Standardization
Provided by IHS under license with ISO
No reproduction or networking permitted without license from IHS Not for Resale

- Syntax of the information flow (grammar): if altered along the way, may change the semantics. Is the syntax significant to an intercepting object?
- Symbolic representation of the information flow: different sets of symbols may be used to represent identical information flows.
- Physical signal representation of the logical symbolic representation of the information flow: different signals may be used to represent identical symbols.

Reference Point D in Figure 6.4-1 consists of two logical interfaces between an ESP and an ESC. Information flow through one interface is unidirectional, and bi-directional through the other. The information flows are transparent to the ISP at the semantic and syntactic levels. The ISP intercepts and processes such information flows only at the symbolic level. The symbols are recovered from incoming signal flows, pass through the ISP from one side to the other and exit the ISP represented by output signal flows. Input and output signal flows need not be identical to preserve unaltered information flows through the ISP.

Information flows through Reference Point D in Figure 6.4-1 also intersect Reference Points B and C. It is not sufficient to define interfaces only at Reference Point D, or at Reference Points B and C together (while omitting the definition of a Reference Point D interface) in all cases. There are three relationships, which may not be identical, that need to be preserved: a) ESP and ESC, b) ESP and ISP, and c) ISP and ESC. The model in Figure 6.4-1 considers interfaces at Reference Points B or C to be images of a corresponding interface at Reference Point D. All three interfaces may share many attributes, but not necessarily all. The model allows each interface to be defined separately or to share a common definition where appropriate.

## 6.5 Reference point and interface template

Figure 6.5-1 shows a generic four-layer service model and a set of possible relationships among three interacting domain objects. The model is general enough to serve as a template for most anticipated DAVIC interaction cases. It may be used as an aid to identify, categorize, and define pertinent services and interfaces in a given interaction scenario. Any unnecessary elements may be deleted from an instance. Specifically, the template provides place holders for:

Service layers used to segregate peer service objects in the ESP, ISP, and ESC domains,

Peer-to-peer interfaces between service objects in different domains, and

Inter-layer Service Access Points (SAPs) between adjacent service layers within each domain system object.

Note that only external services and interfaces are of interest for purposes of this international standard.

 © ISO/IEC 1999 - All rights reserved

--`,,```,,,,````-`-`,,`,,`,`,,`---

Copyright International Organization for Standardization
Provided by IHS under license with ISO
No reproduction or networking permitted without license from IHS Not for Resale

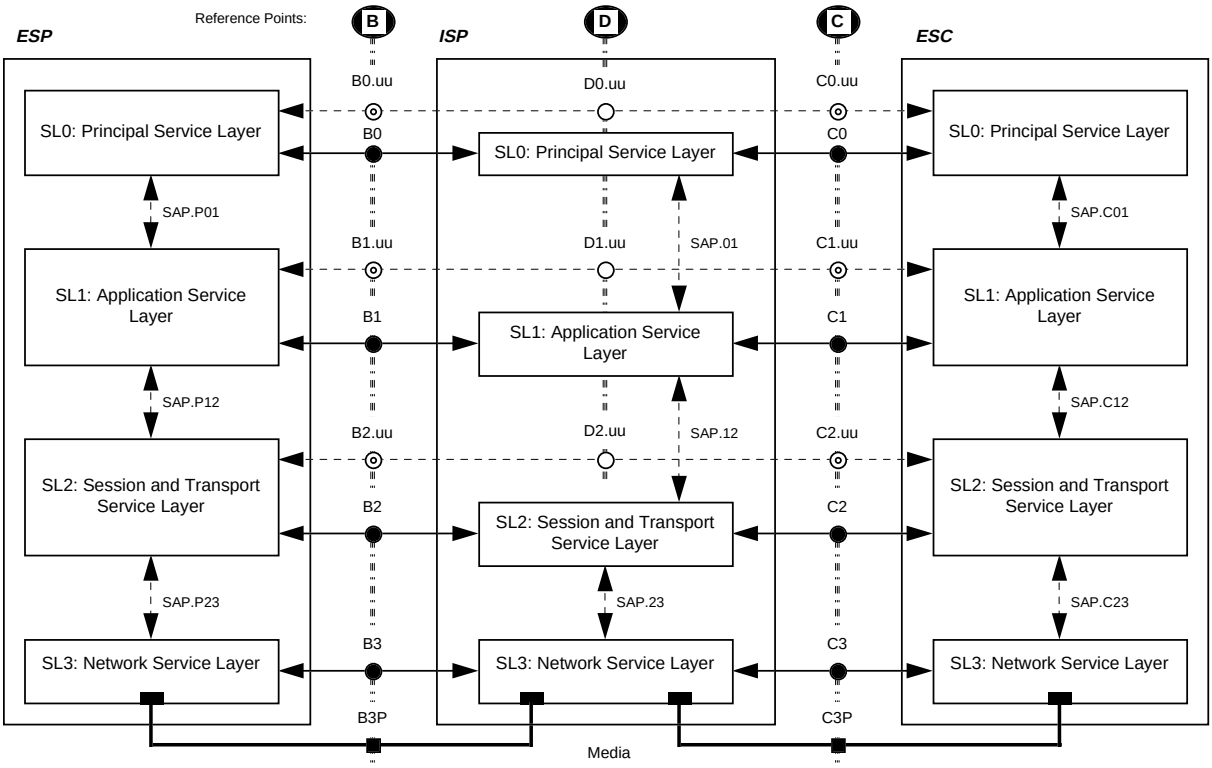


**Figure 6.5-1 — Reference point and interface template**

### Service interactions

Service interactions can be peer-to-peer or hierarchical. Figure 6.5-1 shows a general L(N)-layer service object interfacing with adjacent-layer objects and with a peer object. Inter-layer interfaces are identified as SAPs that are *local* to each system. The set of external interfaces between peer objects constitute a reference point.

### Peer-to-peer interfaces

Peer-to-peer interactions are information exchanges between service objects in the same service layer. A logical peer-to-peer interface represents a set of rules for information exchange.

### Hierarchical interfaces

Service objects in adjacent service layers interact hierarchically using SAPs. SAPs are hierarchical, logical information exchanges between objects in adjacent layers.

### Generic four-layer service model

The top Principal Service Layer (SL0) in the generic model in Figure 6.5-1 contains objects that use the services of SL1 objects to exchange information. Information flows between an ESP and an ESC through the principal peer-service interface D0 is transparent to the ISP. Although the information passes through the ISP, at the SL0 layer, the ISP does not *see* the information. The information flow becomes meaningful to the ISP only at the SL2 layer—and then only as symbols passing through the end-to-end digital *pipe*. The information flows are not meaningful to the ISP at a syntactic or semantic level. When the ISP is, in fact, either the source or the sink of end-to-end information, then the interfaces become the *visible* B0 and C0 layer-SL0 interfaces.

The Application Service Layer (SL1) represents a set of objects that create an environment for processing SL0 information.

The Session and Transport Service Layer (SL2) represents objects that manage and control the resources needed locally and in the ISP to establish communication pipes through which SL1 clients can communicate with peers elsewhere.



Copyright International Organization for Standardization
Provided by IHS under license with ISO
No reproduction or networking permitted without license from IHS Not for Resale

The Network Service Layer (SL3) is the only layer that contains objects that have physical external interfaces to other real systems. All logical information flows eventually map to one or more physical SL3 interfaces.

Annex D provides Management, Control, and User Plane interface examples that illustrate in more detail how the general principles described above can be used in specific interfaces between related objects.

# 7 DAVIC System Reference Model

This clause describes the DAVIC System Reference Model (DSRM). The model is based on the Abstract System Reference Model described in clause 6. However, the DSRM is less abstract and refers to actual system blocks that are defined in other parts of ISO/IEC 16500.

The DSRM identifies major system blocks of a general DAVIC System and reference points between them. Internal details of system blocks are revealed only to the level necessary to identify relationships and information flows that are discernible outside a block.

A typical region in the DAVIC System contains principal Service Provider Systems, Delivery Systems, and Service Consumer Systems. This clause identifies the interfaces and reference points of internal elements of such systems configured to provide digital audio, video, or data information transfer services.

The example architectures and interfaces included in this clause are intended to serve as templates for developing specific DAVIC System models to be included in other parts of this international standard. The examples are not intended to represent all possible DAVIC System configurations. Services that are not supported by these examples can be represented by the ASRM or by modifications of the DSRM such as adding or deleting interfaces and changing element specifications.

## 7.1 P0 Partition level DSRM

The P0 partition view of the DSRM follows the P0 partition view of the ASRM shown in Figure 7.1-1.

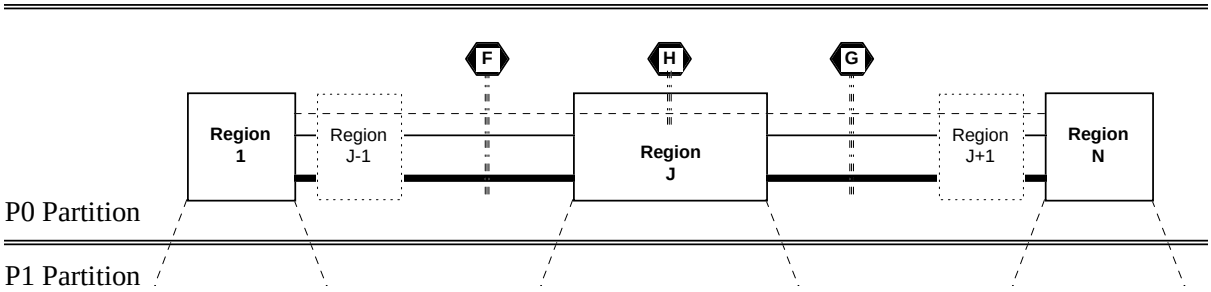


**Figure 7.1-1 — P0 Partition level DAVIC System Reference Model**

## 7.2 P1 Partition level DSRM

A instance of the Abstract System Reference Model is shown in Figure 7.2-1. This shows the Region J application of the abstract reference model in a specific realization. This instance defines a DAVIC System Reference Model of a region and reveals the objects visible at the P1 partition level. Each P1 object is a container for P2-partition objects. Information flows through a P1 object may be transparent at a given service layer or may terminate on internal P2 objects (unlabeled blocks in Figure 7.2-1).

 © ISO/IEC 1999 - All rights reserved

Copyright International Organization for Standardization
Provided by IHS under license with ISO
No reproduction or networking permitted without license from IHS Not for Resale

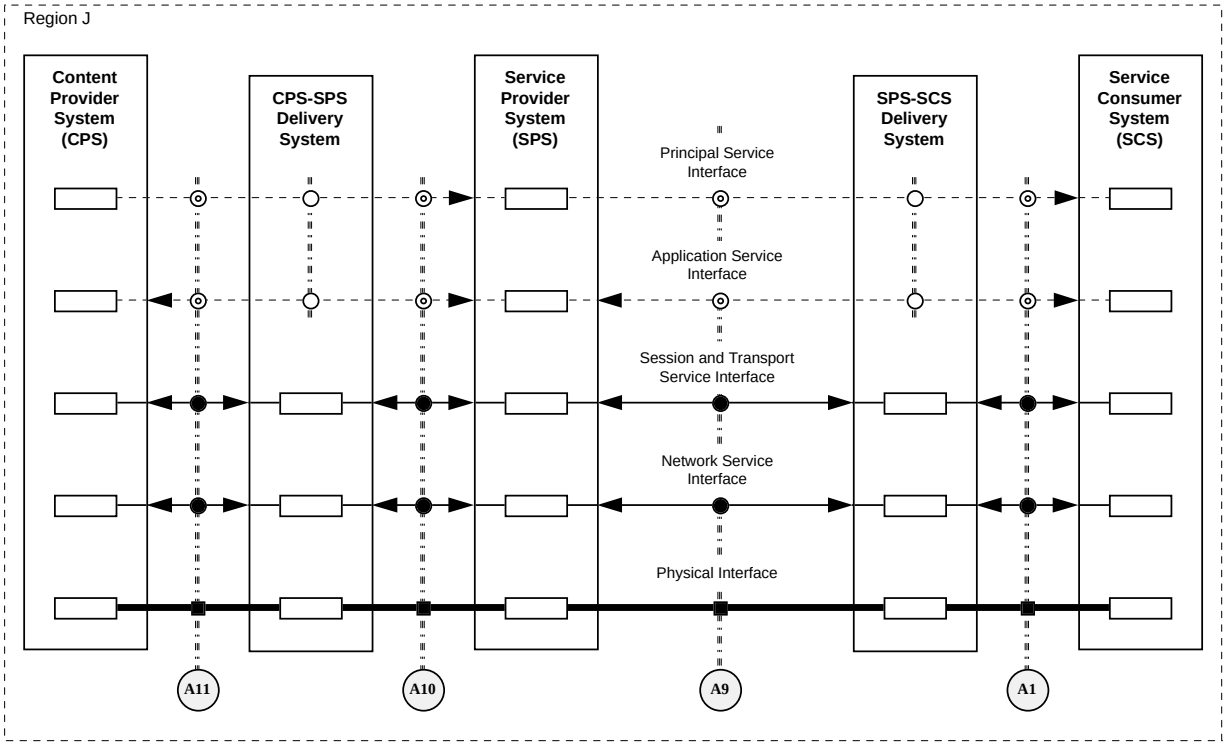


**Figure 7.2-1 — P1 Partition level DAVIC System Reference Model**

The DAVIC entities of Service Provider System (SPS), Delivery System (DS) and Service Consumer System (SCS) are likely to be present in a typical region of the DAVIC System. The SPS corresponds to the ESP in the abstract model, the Delivery System objects correspond to the ISP, and the SCS object to the ESC. The purpose of the Content Provider System (CPS) is to load content into the Service Provider System using the services of the CPS-SPS Delivery System. (These CPS and the CPS-SPS Delivery System entities are not defined in this revision of the international standard.)

The DSRM is multidimensional in the sense that multiple SPSs may connect through several networks to many SCSs. Each entity is composed of subsystem objects which may or may not exist in a specific implementation of the reference architecture. The links between entities represent logical information flow. Similar flows may exist between subsystems within an entity as well.

The work of defining the system entities, defining the information flow between entities and identifying the physical interface requirements at various reference points is the scope of this reference model definition.

### Component definition

The specific DAVIC Systems Reference Model (DSRM) can be obtained by defining an instance of the Abstract Reference Model as illustrated. To describe this instance four main components are identified and defined. These components are as follows:

- System Entities
- Information Flows
- Reference Points
- Interface Definitions

Each of these components provide key constructs that form the building blocks for the definition of the DAVIC System Reference Model.

## 7.2.1 System entities

The main DSRM system entities in a given region of the DAVIC System are the Service Provider System (SPS), Delivery System (DS) and Service Consumer System (SCS). The Service Provider System is a collection of



Copyright International Organization for Standardization
Provided by IHS under license with ISO
No reproduction or networking permitted without license from IHS Not for Resale

system blocks that accept, process, and present addressed information for delivery to a Service Consumer System. The Delivery System entity is responsible for accepting information from the SPS or SCS and delivering it, with an agreed quality level, to an appropriate destination. The SCS entity provides the user interface, accepts incoming information, and presents addressed information to the Delivery System.

Internal to each of the main entities are additional system blocks that are defined in this and in other parts of this international standard.

### 7.2.2 Information flows

This international standard defines two basic information categories: content-information and control-information. Information flows from a source object to a destination object may be content-information only, control-information only, or both.

Information flows may be considered at semantic, syntactic, and symbolic levels. An object handling an information flow must be sensitive to the flow at least at the symbolic level. (Symbols may be just single bits or a defined set of multi-bit patterns that are meaningful to an intercepting object.) An object may also understand syntactic rules that apply to a given information flow, and in some cases, understands what the information flow means (semantics).

Information flows that are not meaningful to an object at the syntactic and semantic levels are defined as transparent information flows. The transit of such flows through an object do not alter the object's state. The object's behavior before and after interception of the flow appears to be unchanged to external observers. Information flows may change as a result of path properties. In a general case, therefore, a flow is not necessarily identical at its information source and destination.

#### 7.2.2.1 S1 information flow

S1 is content-information flow from a source object to a destination object, normally in the User Plane. The flow is transparent to any intermediate object through which the flow passes. The flow does not appear to alter the behavior of the information source and destination objects. E.g., audio, video, or data transferred from an ESP to an ESC.

#### 7.2.2.2 S2 information flow

S2 is control-information flow, normally in the DS User Plane, from an Application Service Layer source object to a peer destination object. The flow is transparent to any intermediate object through which the flow passes (it is an S1-category information flow as far as the intermediate object is concerned). In the usual case, the end-to-end information source and destination objects are Control Plane objects.

The behavior of the source or destination object may change as a result of the flow. For example:

1. An application may understand and accept a request to perform an operation that results in a change in its state, or
2. It may reject a message because it does not understand the flow, or is unable to execute a service request for some reason. The destination object may reject the flow silently, i.e., without informing the source object that anything is wrong, and return to its pre-message state, or
3. It may reject a message for the reasons above, and let the source know that its message was rejected (and perhaps why).

Initializing or reconfiguring a downloaded application, while it is idle, is an example S2 flow that changes the state of an application to enable it to provide a service to an SL0 client. Once the application is serving a client, S2 messages may also affect S1 information flows such as messages to *Play* or *Stop* a movie.

#### 7.2.2.3 S3 information flow

S3 is control-information flow, normally in the Control Plane, from a Session and Transport Service Layer source object to a peer destination object. Other than the change of service layer, S3 is similar to S2. Examples of S3 flows are messages to establish, modify, or terminate a session; negotiate resource requirements, and report exceptions.

 © ISO/IEC 1999 - All rights reserved

Copyright International Organization for Standardization
Provided by IHS under license with ISO
No reproduction or networking permitted without license from IHS Not for Resale

#### 7.2.2.4 S4 information flow

S4 is control-information flow, normally in the Control Plane, from a Network Service Layer source object to a peer destination object. Other than the change of service layer, S4 is similar to S2 and S3. Examples of S4 information flows include messages to establish or release connections, communicate addresses, port information, and other routing data.

#### 7.2.2.5 S5 information flow

S5 is management-information flow from a source object to a peer destination object on the Management Plane of a container object. This category includes information flows between peer Management Plane objects in any given service layer (Layer Management objects), and information flows between objects where no service layer is indicated (System Management objects).

### 7.2.3 Reference points

DSRM Reference Points define sets of interfaces through which peer objects transfer information.

Reference points are defined only at a given partition level. Since partition levels encapsulate details of hierarchically-lower partition levels, reference points are meaningful only on a designated partition level. Consequently, reference points do not cross partition boundaries.

The following reference points are defined in the DSRM.

#### 7.2.3.1 P0 partition reference points

DSRM P0 partition reference points shown in Figure 7.1-1 are:




Adjacent regions (Region J-1 and Region J in ): a set of interfaces through which content-information and control-information flows between the regions.




Adjacent regions (Region J and Region J+1): a set of interfaces through which content-information and control-information flows between the regions.




Non-adjacent regions (Region 1 and Region N via Regions J-1 and J+1): a set of transparent interfaces.

#### 7.2.3.2 P1 partition reference points

DSRM P1 partition reference points shown in Figure 7.2-1 are:




SCS and DS linking SPS and SCS




SPS and DS linking SPS and SCS




SPS and DS linking Content Provider System (CPS) and SPS, or recipient SPS and DS linking it to a source SPS in the case of cascaded SPS systems




CPS and DS linking CPS and SPS, or source SPS and DS linking it to a recipient SPS in the case of cascaded SPS systems




STB and peripheral, human or machine, STB-users.

#### 7.2.3.3 P2 partition reference points

The P2 partition level reference points show in Figure 7.4-1 are internal to the Delivery System and are not visible at the external interfaces of the Delivery System:



Copyright International Organization for Standardization
Provided by IHS under license with ISO
No reproduction or networking permitted without license from IHS Not for Resale




Core Network and Access Network




Network Related Control and Core Network




Service and Network Related Control




Network Related Control and Access Network




Management (object) and all related DS P2 objects

Reference Point A0 show in Figure 7.5-1 is internal to the STB and is not visible at the external interfaces of the Service Consumer System:




Network Interface Unit and other internal STB elements. Reference Point A0 terminates inside the SL2 Session and Transport Service Layer. Since the NIU does not contain session service objects, only interfaces between NIU and STU Transport Service objects in SL2, and between SL3 Network Service Layer objects are defined.

Reference Point A9* is internal to the SPS and is not visible at the external interfaces of the Service Provider System:




Internal elements of the Distributed Server. A9* interconnects hosts and service elements with multiplexors and the Service Gateway element.

#### 7.2.3.4 P3 partition reference points

The following internal reference points in the Access Network block in Figure 7.4-1 are P3-partition-level interfaces and are not visible outside the block:




Access Node and Distribution Network




Distribution Network and Network Termination

The following internal reference points in the Settop Unit block in Figure 7.5-1 are P3-partition-level interfaces and are not visible outside the block. These reference points define sets of inter-service-layer Application Program Interfaces (APIs) as shown in Figure 7.5-2. APIs provide a defined means for objects in an adjacent higher layer to request services from an object in an adjacent lower layer, and for the service-performing objects to return results.




STU Environment Entity and STU Connectivity Entity




STU Application Entity and STU Environment Entity




STU Product Entity and STU Application Entity

## 7.3 Service Provider System

Figure 7.3-1 models the Service Provider System at the P1 partition level. The system entities, information flows and reference points are indicated in the model. This part of ISO/IEC 16500 identifies and describes the general properties of these elements. For specific requirements, refer to other parts of this international standard.
Figure 7.3-3 models the Service Provider System at the P2 partition level, showing the A9* reference point and a physical view of the Service Provider System with host elements instead of service elements.

 © ISO/IEC 1999 - All rights reserved

Copyright International Organization for Standardization
Provided by IHS under license with ISO
No reproduction or networking permitted without license from IHS Not for Resale

### 7.3.1 Service Provider System Control Plane Elements

The Service Provider System contains the following Control Plane elements. Figure 7.3-1 shows the relationship of the elements at the A9 Reference Point and Figure 7.3-2 at the A10 Reference Point.

#### 7.3.1.1 Content Provider Subdomain Elements

Content Provider Subdomains comprise a Content Group and Application Group. Each Content Provider Subdomain instance is associated with one particular content provider. Access to content or application assets in any given Content Provider Subdomain is restricted to the associated Content Provider.

##### *7.3.1.1.1 Content Group*

A Content Group is a set of S1-category assets associated with a given Content Provider.

##### *7.3.1.1.2 Application Group*

An Application Group is a set of S2-category assets associated with a given Content Provider.

#### 7.3.1.2 Service Gateway Element

The Service Gateway Element controls control access to assets in Content Provider Subdomains. Only the associated Content Provider, a client designated by the Content Provider, has read or write access to information in a given subdomain.

#### 7.3.1.3 Management Function

The Management Function interfaces with peer management functions in the Service Consumer System.

#### 7.3.1.4 Session and Transport Control Function

The Session and Transport Control Function is responsible for establishing and terminating the environment in which an application will operate. This environment includes the quality of service requirements for both the application and product entities.

#### 7.3.1.5 Network Control Function

The Network Control Function is responsible for the error-free receipt and transmission of content flow information to and from the Server.

#### 7.3.1.6 Network Interface Function

The Network Interface Function (NIF) accepts network specific content-information flows from the DS and provides a non-network specific interface to the remainder of the SPS. (additional definitions of the NIF may exist).

© ISO/IEC 1999 - All rights reserved


Copyright International Organization for Standardization
Provided by IHS under license with ISO
No reproduction or networking permitted without license from IHS
Not for Resale

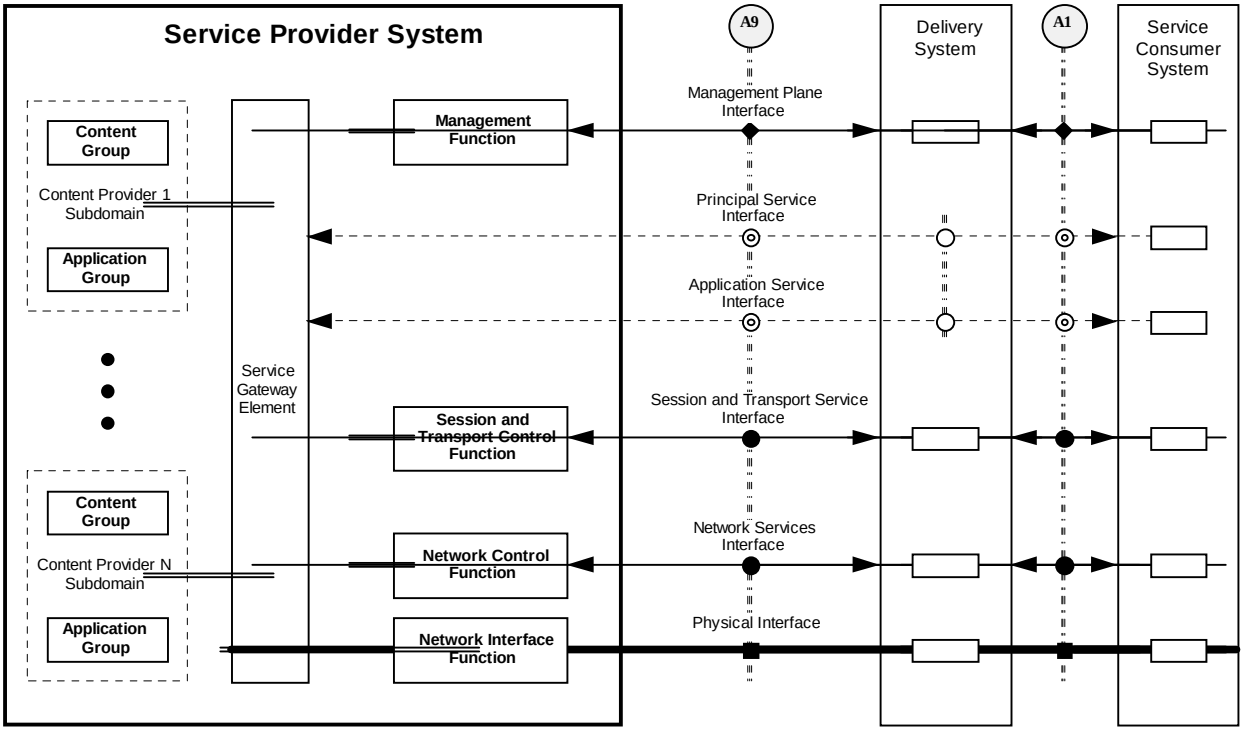


**Figure 7.3-1 — Service Provider System model: A9 Reference Point**

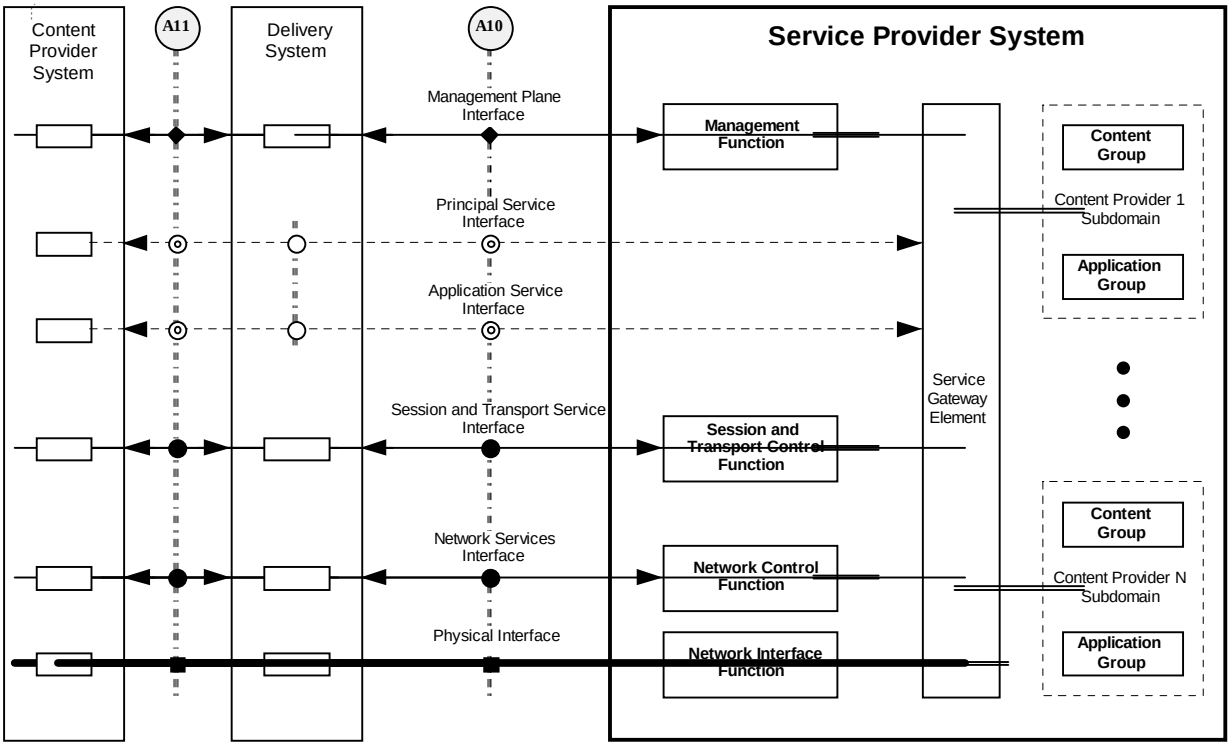


**Figure 7.3-2 — Service Provider System model: A10 Reference Point**

 © ISO/IEC 1999 - All rights reserved

Copyright International Organization for Standardization
Provided by IHS under license with ISO
No reproduction or networking permitted without license from IHS
Not for Resale

### 7.3.1.7 Physical Model and internal reference point

An interface specification is defined, with protocol stacks for internal interconnection of hosts/service elements in the Service Provider System (called A9* in Figure 7.3-3), including MPEG-2 stream servers, real-time encoders, DVB-SI servers, ECM and EMM servers and data servers amongst others. Optional MPEG-2 transport multiplexors may combine the Single Program Transport Streams delivered on S1 across the A9* reference point and other data flows that will form an integral part of the outgoing S1 flow into Multi-Program Transport Streams for delivery across the A9 and A11 reference points

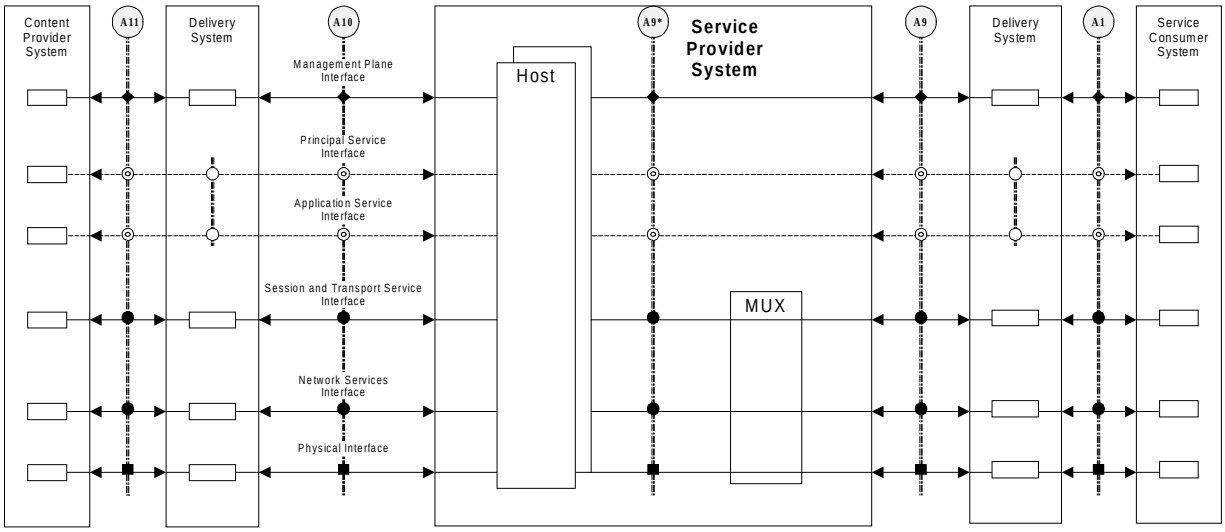


**Figure 7.3-3 — Service Provider System model: A9* Reference point**

## 7.3.2 Information Transport Service Models

Figure 7.3-4 shows a unidirectional stream service and a bi-directional transport services between a Service Provider System and a Service Consumer System.



Copyright International Organization for Standardization
Provided by IHS under license with ISO
No reproduction or networking permitted without license from IHS
Not for Resale

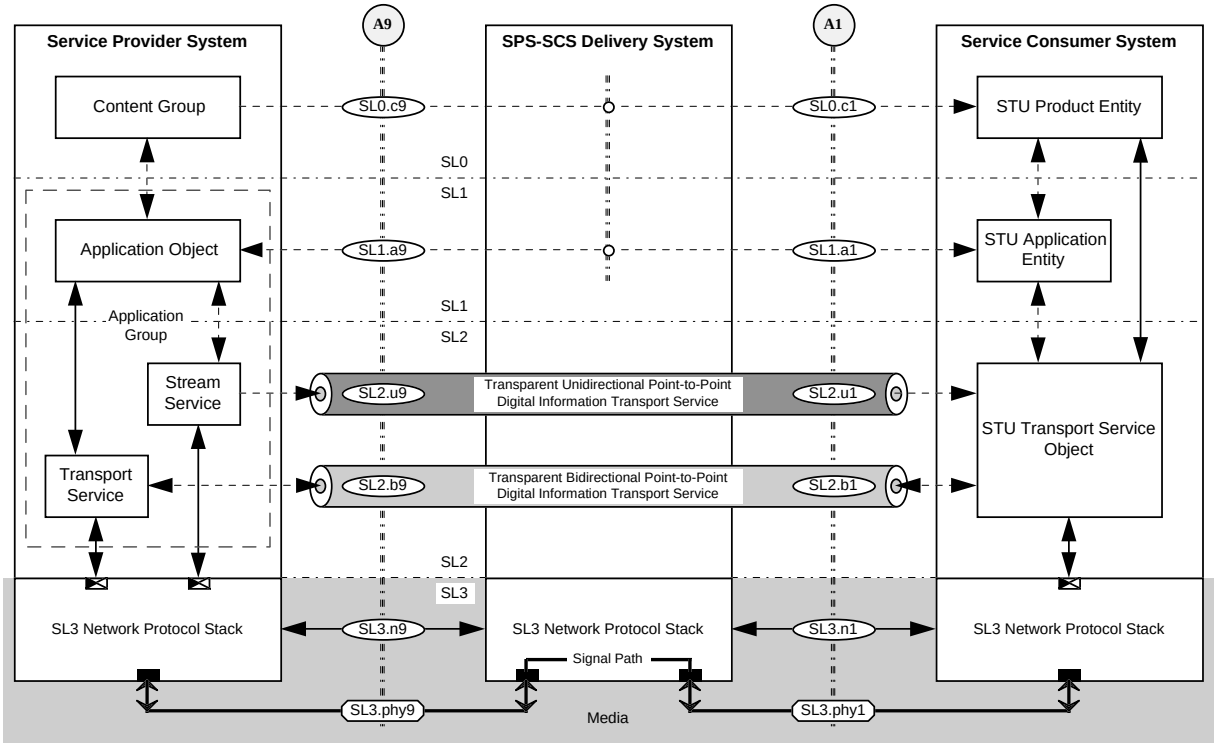


**Figure 7.3-4 — SPS-SCS information transport service model**

Figure 7.3-5 shows a bi-directional transport services between two Content Provider System instances. Both Content Provider System interface with the Delivery System at an A11 Reference Point.

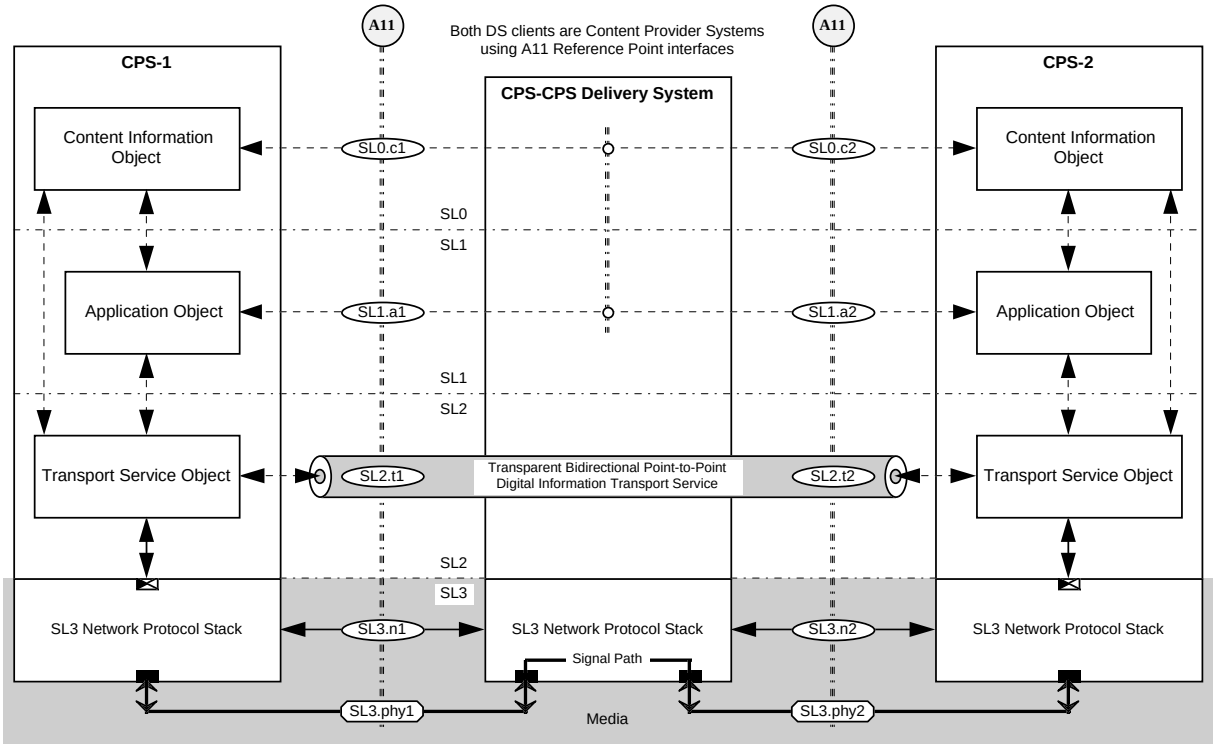


**Figure 7.3-5 — CPS-CPS information transport service model**

 © ISO/IEC 1999 - All rights reserved

--`,,```,,,,````-`-`,,`,,`,`,,`---

Copyright International Organization for Standardization
Provided by IHS under license with ISO
No reproduction or networking permitted without license from IHS
Not for Resale

## 7.4 Delivery System

Figure 7.4-1 defines the Delivery System Control Plane reference model for a system configuration used to transfer audio or video information from a Service Provider System to a Service Consumer System. System entities, information flows, and reference points are indicated. This part of ISO/IEC 16500 identifies and describes the general properties of these elements. For specific requirements, refer to other parts of this international standard.

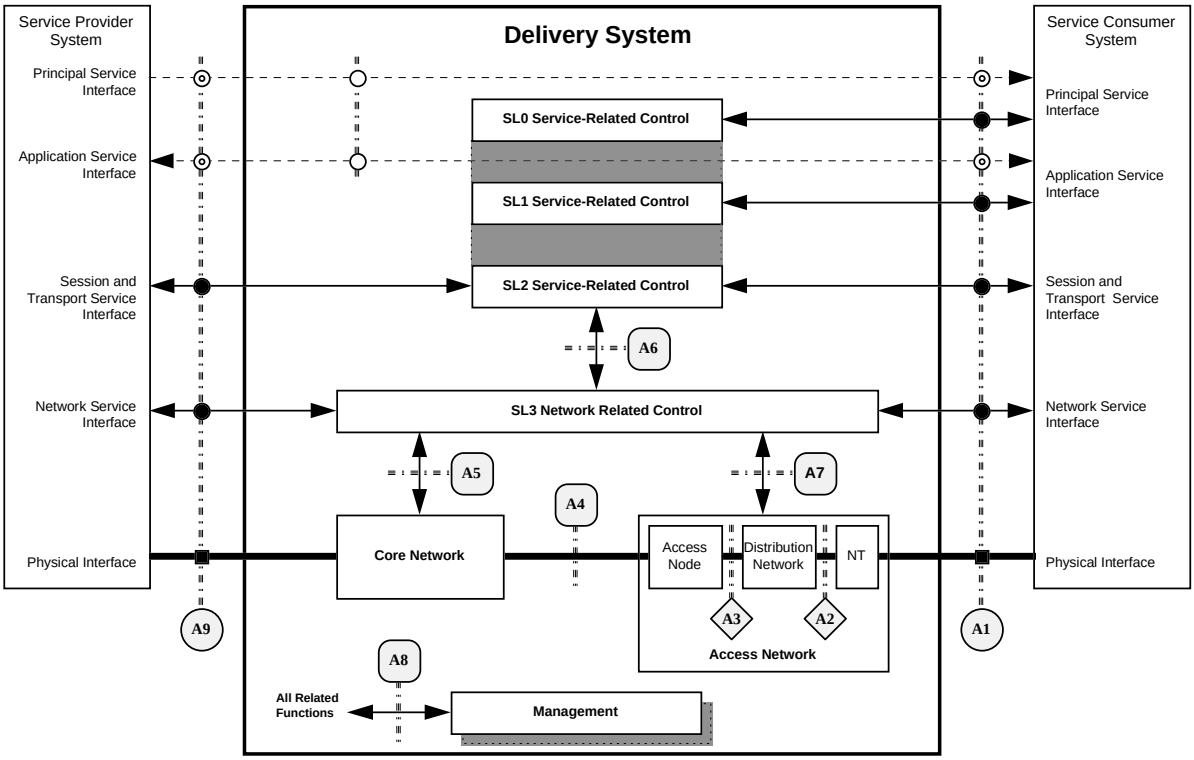


**Figure 7.4-1 — Delivery System Control Plane model**

### 7.4.1 Delivery System Elements

The Delivery System Control Plane contains the following system blocks.

#### 7.4.1.1 SL0, SL1, and SL2 Service Related Control

The Service Related Control provides all control for the services that are offered by the Delivery System. The DSRM allows for SL0, SL1, and SL2 Service Related Control subsets.

#### 7.4.1.2 SL3 Network Related Control

The Network Related Control entity provides control functions for network configuration, connection establishment and termination, and information routing. Different sets of A5, A6, and A7 specifications may be defined in case different Core Network and Access Network elements are used to provide interoperable Delivery System services at the A1 and A9 Reference Points.

#### 7.4.1.3 Core Network

The Core Network is responsible for accepting information flows and transmitting the information, error-free, from a source location to a destination location. This network can be characterized as a high speed digital network or series of networks.



--`,,```,,,,````-`-`,,`,,`,`,,`---

Copyright International Organization for Standardization
Provided by IHS under license with ISO
No reproduction or networking permitted without license from IHS Not for Resale

#### 7.4.1.4 Access Network

The Access Network is the final delivery segment of the system. It can take many forms depending on the specific implementation. The entity is composed of the following sub-entities (at the P3 partition level):

##### *7.4.1.4.1 Access Node*

The Access Node is responsible for processing information flows in preparation for transport through the selected distribution network.

##### *7.4.1.4.2 Distribution Network*

The Distribution Network provides the final transport medium used to deliver information flows from a source location to a destination location.

##### *7.4.1.4.3 Network Termination*

A Network Termination is an optional entity used to adapt information flows from one network configuration to another. This device, if used, serves as a bridge for the system.

#### 7.4.1.5 Management Entity

The Management Entity is responsible for the operation and maintenance functions of the network. In most instances, the Management Entity will communicate using S5 information flows.

### 7.4.2 Enhanced Broadcast Reference Model (User Plane)

Figure 7.4-2 illustrates enhanced broadcast information transport services via the Delivery System User Plane. Both services are end-to-end and transparent to the Delivery System. The broadcast service is unidirectional, whereas the point-to-point service is bi-directional.

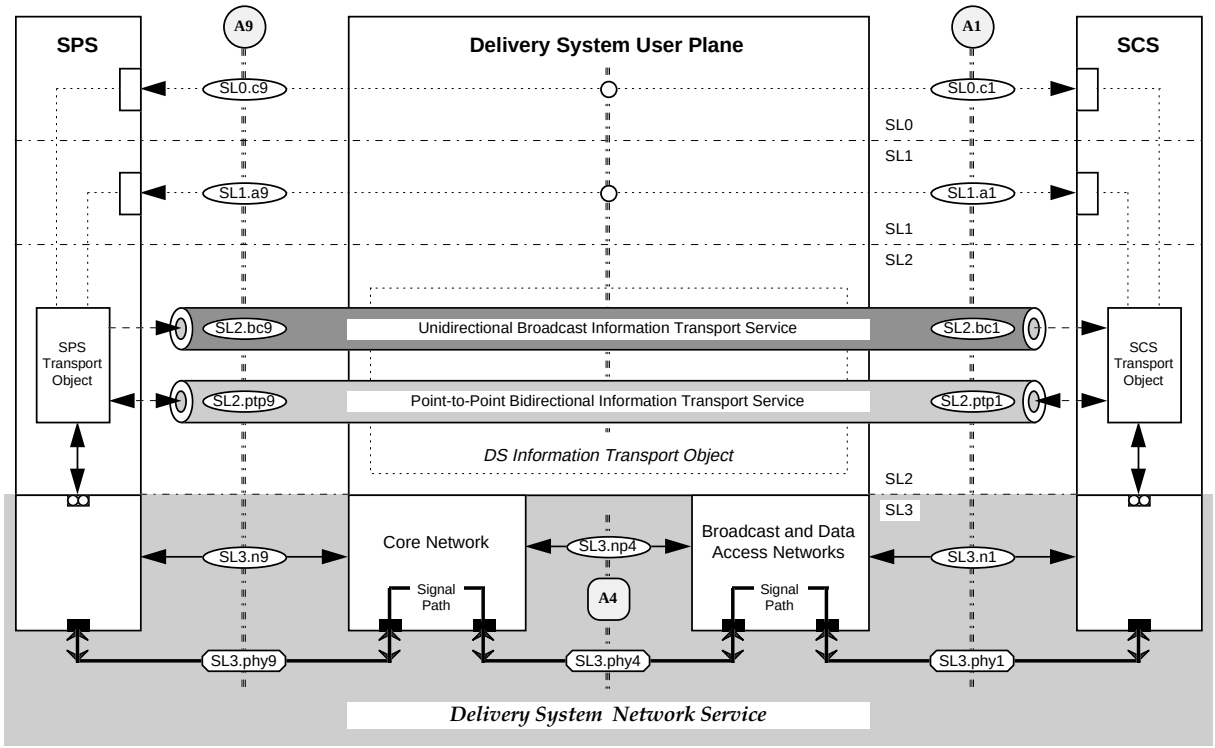


**Figure 7.4-2 — Enhanced Broadcast reference model: User Plane**

 © ISO/IEC 1999 - All rights reserved

Copyright International Organization for Standardization
Provided by IHS under license with ISO
No reproduction or networking permitted without license from IHS
Not for Resale

### 7.4.3 DAVIC System Manager Reference Model (User Plane)

Figure 7.4-3 shows the system blocks on the Delivery System that perform system management functions and their interfaces to peer objects in an External Support Service system, and to Delivery System information transport objects.

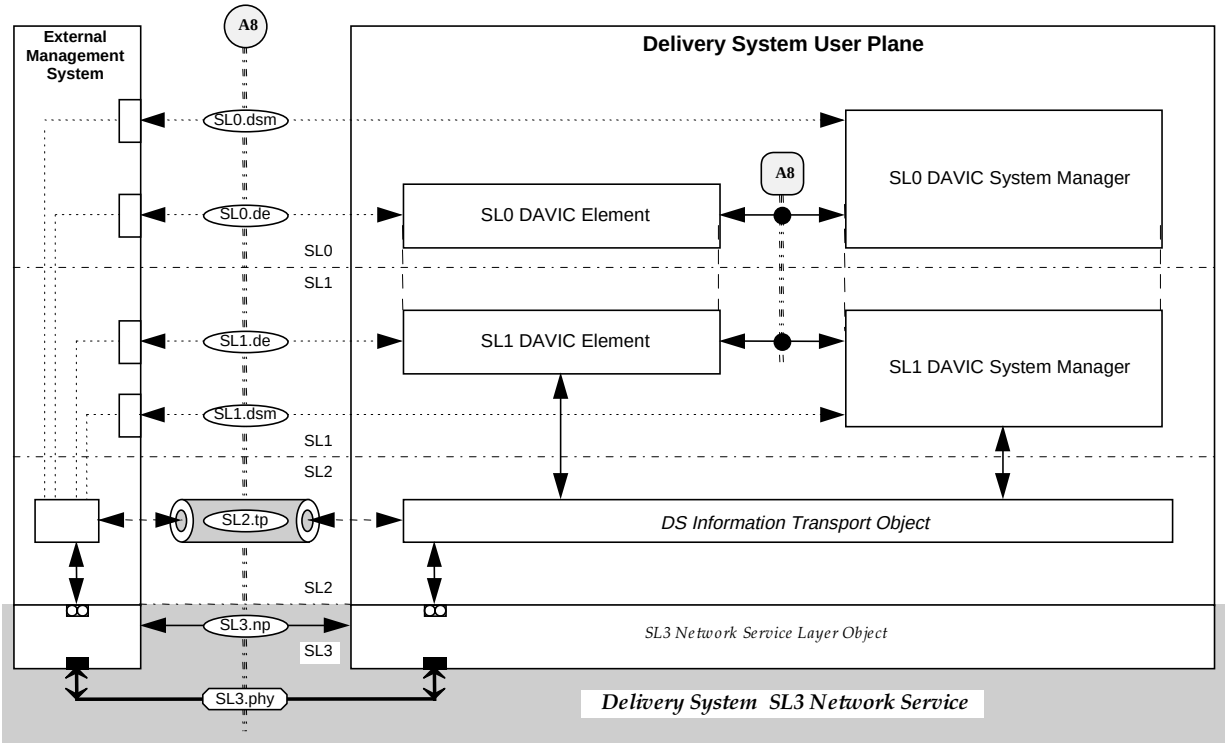


**Figure 7.4-3 — DAVIC System Manager reference model: User Plane**

## 7.5 Service Consumer System

Figure 7.5-1 models the Service Consumer System (SCS) at the P1 partition level. The system entities, information flows, and reference points are indicated in the model. This part of ISO/IEC 16500 identifies and describes the general properties of these elements. For specific requirements, refer to other parts of this international standard.



Copyright International Organization for Standardization
Provided by IHS under license with ISO
No reproduction or networking permitted without license from IHS Not for Resale

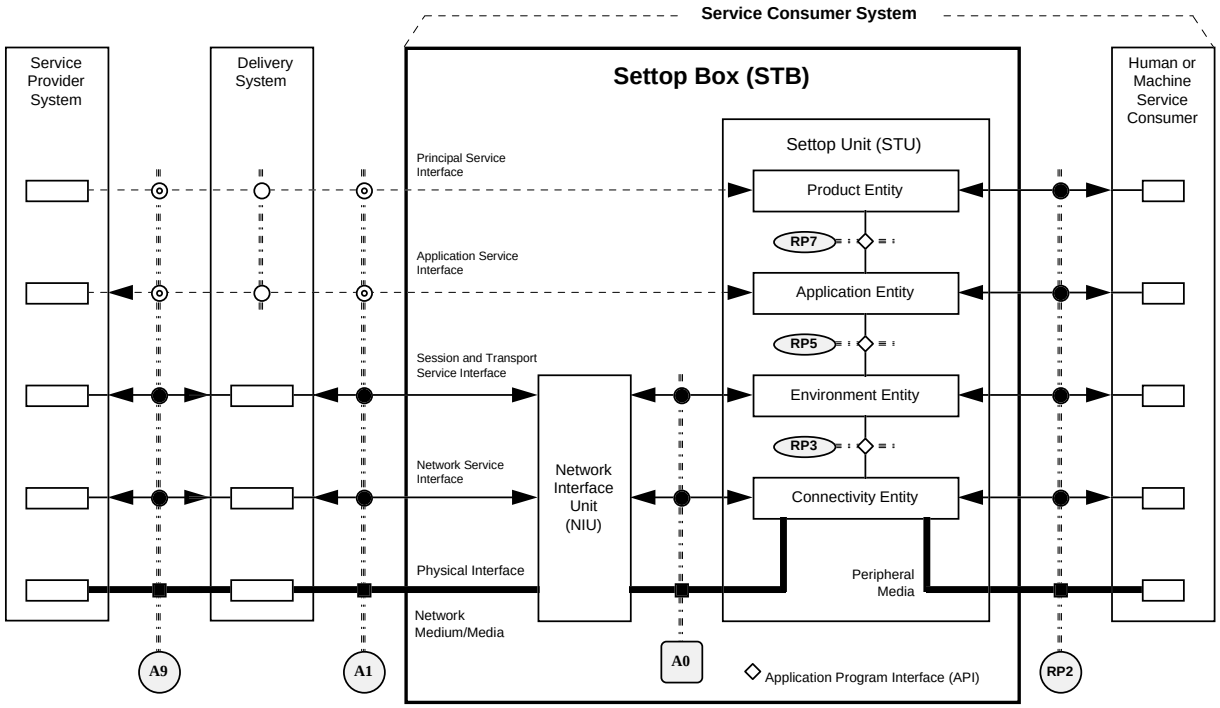


**Figure 7.5-1 — Service Consumer System model**

**Service Consumer System system blocks**

## 7.5.1 Set Top Unit

The Set Top Unit (STU) contains the primary functions of the Service Consumer System that permit a human or machine Service Consumer to interact with the Delay System and Service Provider System. The following blocks are contained in the STU:

### 7.5.1.1 Product Entity

The entity responsible for accepting transparent content-information and presenting the information to the appropriate using machine.

### 7.5.1.2 Application Entity

The entity that accepts or generates application services. The Application Entity will provide the interactive information processing for the consuming device.

### 7.5.1.3 Environment Entity

This entity is responsible for establishing and terminating the environment in which an application will operate. This environment includes the quality of service requirements for both the application and product entities.

### 7.5.1.4 Connectivity Entity

The Connectivity Entity is responsible for the error-free receipt and transmission of content flow information to and from the STU.

### 7.5.1.5 Network Interface Unit

The Network Interface Unit (NIU) accepts network specific content-information flows from the Delivery System and provides a non-network specific interface to the Connectivity Entity.

 © ISO/IEC 1999 - All rights reserved

Copyright International Organization for Standardization
Provided by IHS under license with ISO
No reproduction or networking permitted without license from IHS
Not for Resale

NOTE: The NIU shown in Figure 7.5-1 contains only functions. Other NIU configurations are possible when Network Service Layer and, perhaps, Session and Transport Service Layer functions are relocated from the Connectivity and Environment Entities to the NIU.

### 7.5.2 Human or Machine Peripheral system block

The behavior and interfaces of Human or Machine Peripheral system blocks are not defined in this revision of the international standard.

### 7.5.3 Generic Service Consumer System model

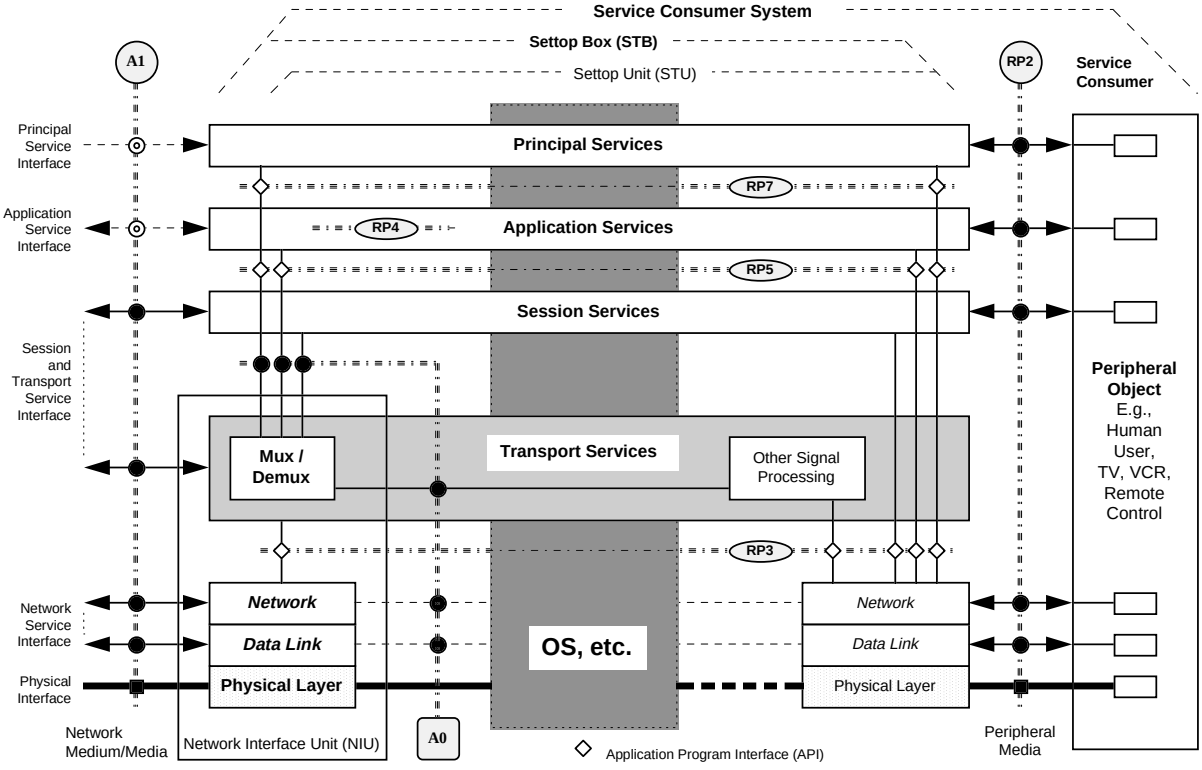


**Figure 7.5-2 — Generic Service Consumer System model**

Figure 7.5-2 maps the interfaces identified in Figure 7.5-1 to a generic Service Consumer System model. The model provides additional information flow details and functional block relationships. Place-holder functional elements and layers are used to illustrate that both network and peripheral media sides of the STU can be modeled symmetrically.

NOTE: The NIU in Figure 7.5-2 includes only physical layer functions to illustrate one possible locus for the A0 reference point.

The transport layer in Figure 7.5-2 contains multiplexing, demultiplexing, and other signal processing functions. Information flows entering the transport layer may be composite streams that consist of one or more information subchannels. The functions in the transport layer separate and reconstruct the subchannels for use by other layer entities and the functional block labeled OS, etc., The STU block contains an operating system performing the services shown and may contain other STU functions such as conditional access and system management.

# 8 DAVIC System transaction flow scenarios

The purpose of this clause is to provide a communications functional model that identifies the functional entities and the protocol independent information flows between them.



--`,,```,,,,````-`-`,,`,,`,`,,`---

Copyright International Organization for Standardization
Provided by IHS under license with ISO
No reproduction or networking permitted without license from IHS Not for Resale

The functional entities are identified and the functions defined at a high level. The information flows, called relationships, are also identified and defined at a high level.

These functional entities and information flows are used in ISO/IEC 16500-2 to describe particular scenarios.

Transaction flows are also described which expand on the actual functions and flows that occur with different transactions that make up a relationship. Repetitively used transaction flows are referred to as *macros.*

### Functional entities and their relationships

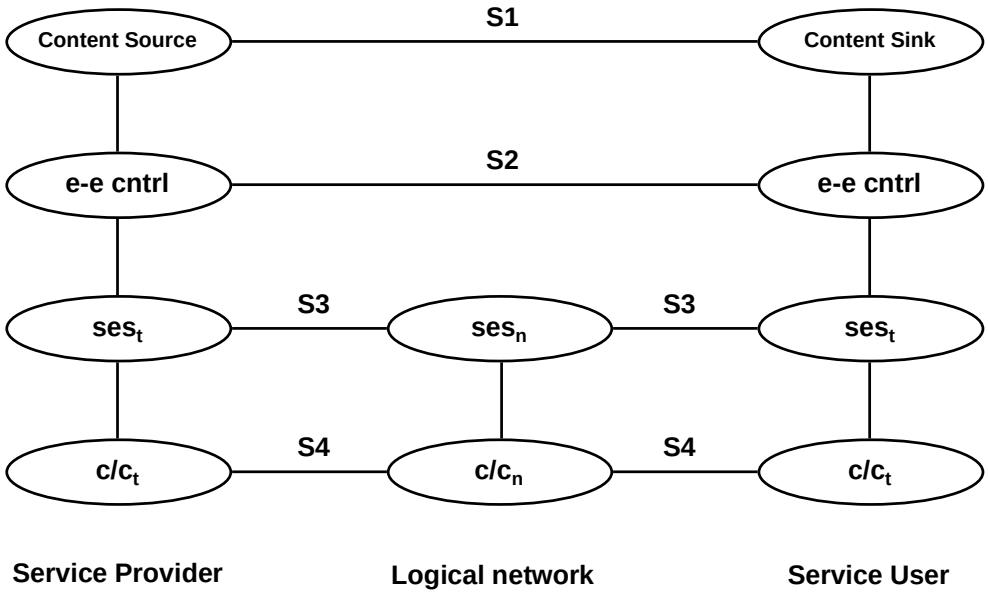


**Figure 8.0-1 — Functional entities and relationships**

## 8.1 Functional entity definitions

**PRSt:** Primary Service provision by the Service Provider and Primary Service acceptance by the Service User.

**APPSt:** Application Service control by the Service User and Application Service actions by the Service Provider.

**SESt:** Session Signaling at the Terminal (t) level to request, identify, accept and clear sessions.

**SESn:** Session Signaling at the Network (n) level to setup and clear sessions, initiate CONn functions and maintain logical linkages between R3 and R4.

**CONt:** Connection Signaling at the Terminal (t) level including single connection setup and clear, carry session information (if required).

**CONn:** Connection Signaling at the Network (n) level including single connection setup and clear, carry session information (if required), maintain logical linkage between R5 and R6.

## 8.2 Relationship (information flow) definitions

**R1:** Peer relationship between two PRSt carrying S1 service information from the Service Provider to the Service User.

**R2:** Peer relationship between two APPSt carrying service control-information from the Service User to the Service Provider and carrying status/acknowledgment information from the Service Provider to the Service User.

**R3:** Peer relationship between SESt and SESn carrying information from the source terminal to the network and including user to network session request, user to network session acknowledge plus additional UN messages.

 © ISO/IEC 1999 - All rights reserved

--`,,```,,,,````-`-`,,`,,`,`,,`---
Copyright International Organization for Standardization
Provided by IHS under license with ISO
No reproduction or networking permitted without license from IHS
Not for Resale

**R4:** Peer relationship between SESn and SESt carrying information from the network to the destination terminal and including user to network session request, user to network session acknowledge plus additional UN messages.

**R5:** Peer relationship between the source CONt and the network CONn carrying information defining user to network connection requirements.

**R6:** Peer relationship between the network CONn and the destination CONt carrying information defining user to network connection requirements.

**R7:** Client/Server relationship between PRSt and APPSt to request control of the Service and to indicate the status of that Service

**R8:** Client/Server relationship between APPSt and SESt to indicate the presence of an R2 and/or an R1 relationship.

**R9:** Client/Server relationship between the source SESt and the source CONt defining a request from the session entity requiring a response from the connection entity.

**R10:** Client/Server relationship between the network SESn and the network CONn defining a request from the session entity requiring a response from the connection entity.

**R11:** Client/Server relationship between PRSt and APPSt to control and support the service.

**R12:** Client/Server relationship between APPSt and SESt to initiate a session and connection(s).

**R13:** Client/Server relationship between the destination SESt and the destination CONt defining a request from the session entity requiring a response from the connection entity.

## 8.3 Transaction Flows

Transaction flows provide more detail about the information flows that occur within a relationship. Transaction flows are always peer-to-peer. Transaction flows do not show the Client/Server relationships but these are assumed to exist as defined above.

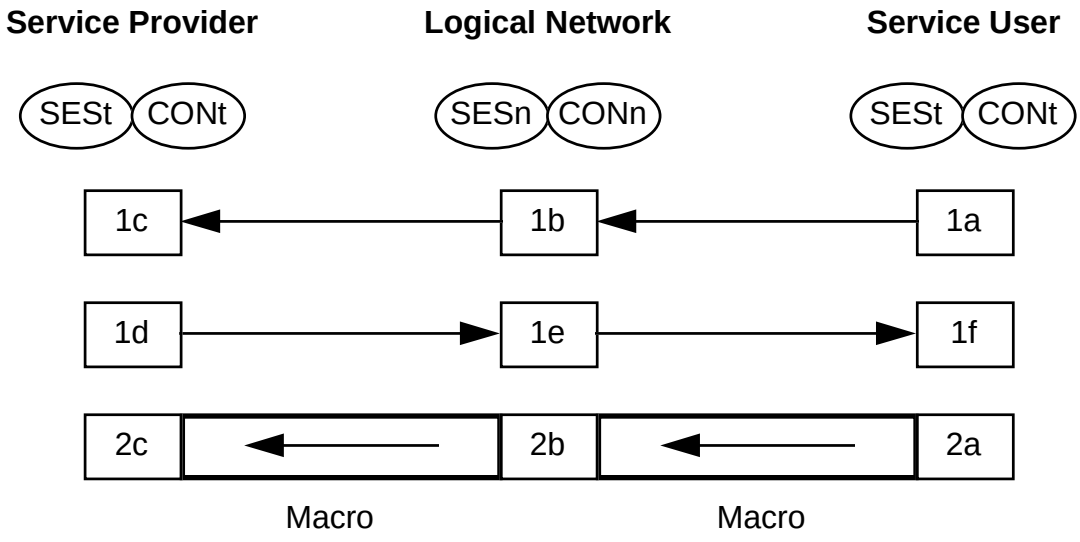


**Figure 8.3-1 — Examples of transaction flows and macros**

Transaction flows exist between peer entities, e.g., between 1a and 1b and also between 1b and 1, etc. Each transaction flow will be defined in Part 12. Any transaction flow that is identical to another will have the same name, e.g., 1a-1b.

A macro is defined where some extra transaction flows exist. A macro simply hides the detail of a more complex transaction flow and saves repeating that detail in a particular transaction flow diagram. Macros are defined in ISO/IEC 16500-2.



Copyright International Organization for Standardization
Provided by IHS under license with ISO
No reproduction or networking permitted without license from IHS Not for Resale

# Annex A
(informative)
# Supplementary definitions

The following definitions are listed in alphabetic order and provided for reference purposes only. They are derived from various sources. Some are direct quotes, others have been modified. Known sources are referenced.

*[Number]* identifies references listed in Annex C. In altered definitions, - *mod* is appended to the reference number.

> NOTE: For convenience, Annex A contains normative and non-normative term definitions. Clause 3 in each part of this international standard specifies normative terms.

**abstract syntax:** abstract data types that define data in terms of abstract properties rather than in concrete implementation terms. An abstract data type is a class of type which defines sets of values (sorts), a set of operators which are applied to these values, and a set of algebraic rules (equations) defining the behavior when the operators are applied to the values.

**Abstract Test Suite (ATS):** a test suite composed of abstract test cases. [ISO/IEC 9646]

**access control:** provides means to access services and protection against unauthorized use of resources, including protection against the use of resources in an unauthorized manner.

**Access Network:** a part of the Delivery System consisting of a collection of equipment and infrastructures, that link a number of Service Consumer Systems to the rest of the Delivery System through a single (or a limited number of) common port(s).

**Access Node:** the element of the Access Network containing centralized functions responsible for processing information flows in preparation for transport through the selected distribution network.

**Account Access:** the on-line access to historical and current account information. For example, this information might include past purchases and associated chosen payment methods for provider accounts, current charges for utility accounts and three-month debits and credits for financial accounts.

**Accreditation:** procedure by which an authoritative body gives formal recognition that a body or person is competent to carry out specific tasks. [ISO/IEC Guide 2]

**Actor:** a person or system component who interacts with the system as a whole and who provides stimulus which invoke actions.

**anchor:** one of two ends of a hyperlink.

**application:** a set of objects that provides an environment for processing Application Service Layer information flows.

**Application Entity (AE):** the entity that accepts or generates application services in the Settop Box. The Application Entity will provide the interactive information processing for the consuming device.

**Application Programming Interface (API):** set of inter-layer service request and service response messages, message formats, and the rules for message exchange between hierarchical clients and servers. API messages may be executed locally by the server, or the server may rely on remote resources to provide a response to the client.

**Application Service Access Point (ASAP):** an interface between a Principal Service Layer and an Application Service Layer through which SL1 (server) objects provide services to SL0 (client) objects; (ASAPs are introduced as a distinct interface between Principal Service Layer and Application Service Layer objects to allow clear segregation of hierarchical application-client and application-server objects. In the OSI Reference Model, such interfaces are hidden within Application Layer 7.)

**Application Service Element (ASE):** this entity accepts and transmits application control-information flows and provides the processing of this information for the Service Provider System.

**Application Service Layer (SL1):** a collection of associated objects that use or provide an application service to peers and to SL0 client objects, e.g., application control such as audio/video stream playback functions and ISP-provided applications such as L1GW services.

**assets:** things that a user sees or hears, e.g., bitmap, audio, text.

 © ISO/IEC 1999 - All rights reserved

--`,,```,,,,````-`-`,,`,,`,`,,`---

Copyright International Organization for Standardization
Provided by IHS under license with ISO
No reproduction or networking permitted without license from IHS Not for Resale

**Asynchronous Transfer Mode (ATM):** a transfer mode in which the information is organised into cells. It is asynchronous in the sense that the recurrence of cells containing information from an individual user is not necessarily periodic.

**ATM Adaptation Layer Type 5 (AAL5):** AAL functions in support of variable bit rate, delay-torelant connection-oriented data traffic requiring minimal sequencing or error detection support.

**Basic Level 1 Gateway (BasicL1GW):** this provides direct access to a single service provider via the connection functionality within the network.

**behavior:** in SDL, behavior is either:
a) externally observable behavior: the set of sequences of responses of a system to sequences of stimuli, or
b) internally observable behavior: a set of actions and tasks, triggered by a stimulus, executed before the state machine transitions to another state.

**block:** a part of a system or parent block that is the container for one or more processes of one block substructure. A block is a scope unit and provides a static interface. When used by itself, block is a synonym for block instance.

**block substructure:** the partitioning of the block into subblocks and new channels at a lower level of abstraction.

**block tree diagram:** an auxiliary document in SDL/GR representing the partitioning of a system into blocks at successively lower levels of abstraction by means of an inverted tree diagram (i.e., parent block at the top).

**block type:** the association of a name and a set of properties that all block instances of this type will have.

**Bulk External Transfer Interface:** the portion of the interface between the Event Data Manager and an External Support System by which the External Support System receives a bulk download of a collection of Event Data in the form of a file of Event Data Records.

**Bulk Usage Data Transfer Interface: t**he portion of the interface between a DAVIC System Manager and an External Support System by which the External Support System receives a bulk download of a collection of Usage Data in the form of a Usage Data File.

**cable modem:** a device that interfaces between an A4 reference point and an Hybrid Fiber Coax plant, or between an A0 reference point and that plant, such that the whole comprises a physical layer tool.

**call:** (in signaling) an association between two or more users, or between a user and a network entity, that is established by use of network capabilities. This association may have zero or multiple information exchange mechanisms established within this call, for example in connection-oriented or in connectionless modes. (ITU-T Rec. Q.9)

**call entity** or **connection entity:** user or network process which terminates S4 flow (c/c).

**certification:** procedure by which a third party gives written assurance in the form of a certificate of conformity that a product, process or service conforms to specified requirements. [ISO/IEC Guide 2]

**CGI**: Common Gateway Interface. CGI allows HTTP servers on the Internet to execute external programs. HTTP servers invoke external programs via the Common Gateway Interface by passing arguments in, and receive results from the external program via the same interface.

**channel:** a connection conveying signals between two blocks (the conveyed signals represent information). Channels also convey signals between a block and the environment. Channels may be unidirectional or bi-directional.

**channel substructure:** a partitioning of a channel into a set of channels and blocks at a lower level of abstraction.

**channel surfing:** viewing of many broadcast channels in a short time period by the End-User.

**character:** an atom of textual information, for example a letter or a digit.

**class:** describes a group of Objects with similar properties and behavior.

**class and object modeling:** used to define business objects and application architecture. Shows how classes interoperate dynamically to offer use cases and application behavior.

**class diagram:** shows the existence of classes and their relationships in the logical view of the system.

**client:** a service consuming object or system (block); ( a synonym for user).



Copyright International Organization for Standardization
Provided by IHS under license with ISO
No reproduction or networking permitted without license from IHS Not for Resale

**component diagram:** shows the dependencies between software components.

**computational model:** gives a description of a system in a graphical form highlighting Objects and their interfaces, as such it is similar to the OMT and UML notion of a class Diagram. An Object Distributed processing (ODP) concept.

**conditional access:** a means of allowing system users to access only those services that are authorized to them.

**confidentiality:** the protection of information from unauthorized disclosure.

**conformance testing:** testing the extent to which an implementation under test is a conforming implementation. [ISO/IEC 9646]

**connect:** indicates the connection of a channel to one or more signal routes or the interconnection of signal routes.

**connection:** an association of transmission channels or circuits, switching and other functional units set up to provide a means for a transfer of user, control and management information between two or more end points (blocks) in a telecommunications network. (ITU-P.10).

**connection service:** provides basic functions to create, maintain, and teardown connections.

**connectivity entity:** the connectivity entity is responsible for the error-free receipt and transmission of content flow information to and from the STU.

**content data:** data in a format for representing the object (e.g. video object's content data is MPEG-2 stream data).

**content-information:** information that does not alter the state of the object intercepting the information flow, e.g., audio, video, or data in a television program that is processed transparently by a television receiver (the control state of the receiver will not change as a result of such information).

**content item:** a collection of content items / content item elements that will form a complete application or a complete programme.

**content item element: t**he smallest (and indivisible) content component.

**content package:** a set of content item elements and/or content items for transfer across an A10 interface between.

**Content Provider:** one who owns or is licensed to sell content.

**Content Service Element:** the Content Service Element provides the processing required by the Service Provider System when content-information is being loaded to the server.

**Control Plane (CP):** a classification for objects that interact to establish, maintain, and release resources and provide session, transport, and connection control functions that facilitate transparent information transfers between ISP clients.

**control word:** the secret key used for a scrambling algorithm.

**control-information:** information that may change the state of the object intercepting the information flow, e.g., a remote control channel up command input. (In some cases an object may interpret a message but reject a request and remain in its current state).

**core event data:** event data whose meaning is specified in this international standard.

**Core Network:** a portion of the Delivery System composed of networks, systems, equipment and infrastructures, connecting the Service Providers to the Access Networks.
NOTE: The term Core Network, in the DAVIC use, is wide sense as it includes the notion of the access networks that are needed to link the Service Providers Systems to the Core Network in strict sense (i.e., exclusive of any access network). This kind of access network is not under consideration within DAVIC.

**correlation key:** a component of an event message header that serves as a globally unique identifier for the service session that generated the event. It can be used by the Event Data Manager to correlate (i.e., associate and collect together) all of the events that have been produced during a service session.

**create request:** the action causing the creation and starting of a new process instance using a specified process type as a template. The actual parameters in the create request replace the formal parameters in the process.

 © ISO/IEC 1999 - All rights reserved

Copyright International Organization for Standardization
Provided by IHS under license with ISO
No reproduction or networking permitted without license from IHS
Not for Resale

**Custom Event Data:** Event Data whose meaning is not specified in this international standard. Data of this type is not expressible using any of the Core Event Data types.

**Data Aggregation:** the process of summarizing usage events.

**Data Correlation:** the association of Event Data generated by different DAVIC Elements for the same service usage instance.

**Data Distribution:** process of sending Event Data to specific External Support Systems based on pre-established information about the data needed by those systems.

**Data Formatting:** the process of creating a structured representation of the unformatted usage records using a pre-defined format.

**Data Generation:** the process of determining what Event Data must be measured and recorded, and producing the necessary data.

**data integrity:** the detection or protection of unauthorized modification of data.

**data origin authentication:** corroboration that the identity of the source of data is as claimed.

**DAVIC Element:** a component of a DAVIC system. A possible source generator of Usage Data.

**DAVIC System Manager**: a component that supports the overall management of the DAVIC System, of which Usage Data management (or Accounting Management) is a part.

**Delivery System (DS):** the portion of the DAVIC System that enables the transfer of information between DS-users.

**Deployment Modeling:** allows you to model how your application is mapped to a distributed deployment network.

**device:** a small piece of hardware, not working by itself, designed to run specialized tasks in association with a host, or to provide resources required by an application but not provided directly by the host. Examples include a conditional access sub system or an electronic program guide application device.

**Distribution Network:** a collection of equipment and infrastructures that delivers information flows from the Access Node to the Network Termination elements of the Access Network.

**domain:** a scope that delimits (makes clear what is included and what is not) the extent of influence of one object on another. Domain boundaries may represent regulatory, ownership, span-of-control and other influence factors.

**Domain Analysis:** an iterative process which focuses on what is in the system but not on how it is implemented. Domain Analysis builds a language/system independent description of the domain.

**downstream:** information flow direction is from an End Service Provider System to an End Service Consumer System.

**element:** a component of the hierarchical structure defined by a document type definition; it is identified in a document instance by descriptive markup, usually a start-tag and end-tag.

**Email**: Electronic mail. Email allows the sending of information in an electronic format from one Internet user to another. Users are identified on the Internet by a unique email address.

**encryption:** a mathematical technique used to ensure the confidentiality of security management information.

**End-Service Consumer (ESC):** a user, either human or machine, whose primary interaction with the system is through the STU.

**End-Service Consumer System (ESCS):** a system that (predominantly) consumes information. ESCSs are ISPS and ESPS clients. The ESCS includes the STU and the ESC.

**End-Service Provider (ESP):** an entity with jurisdiction over a domain that contains a system that (predominantly) provides information to clients.

**End-Service Provider System (ESPS):** a system that (predominantly) provides information to clients. ESPSs are ISPS clients and may also be clients of other ESPSs. ESPSs consist of hardware and software sub-systems that use ISP services to provide video and multimedia services to ESCSs.

**end-tag:** descriptive markup that identifies the end of an element



Copyright International Organization for Standardization
Provided by IHS under license with ISO
No reproduction or networking permitted without license from IHS Not for Resale

**Enhanced Level 1 Gateway (EnhancedL1GW):** this provides the first-point-of-connection for the customer to the service environment. It supplies the customer with the top level navigation information, allowing a choice of multiple service gateways or service providers.

**Entitlement Control Message (ECM):** conditional access messages carrying an encrypted form of the control words or a means to recover the control words, together with access parameters, i.e., an identification of the service and of the conditions required for accessing this service.

**Entitlement Management Message (EMM):** conditional access messages used to convey entitlements or keys to users, or to invalidate or delete entitlements or keys.

**environment:** a synonym for the environment of a system. Also when context allows, it may be a synonym for the environment of a block, process, procedure, or service.

**Environment Entity:** this entity is responsible for establishing and terminating the environment in which an application will operate. This environment includes the quality of service requirements for both the application and product entities.

**environment of a system:** the external world of the system being specified. The environment interacts with the system by sending/receiving signal instances to/from the system.

**error:** an error occurs during the interpretation of a valid specification of a system when one of the dynamic conditions of SDL is violated. Once an error has occurred, the subsequent behavior of the system is not defined.

**Event Data:** data relating to events and usage of resources, typically needed for financial transactions involving end Service Consumers, network providers, end service providers and Content Providers. This data is collected from the system by an Event Data Manager and made available at the External Transfer Interface.

**Event Data Collection Element:** a portion of each DAVIC Element which aggregates internal usage events that occur within the DAVIC Element and then produces Event Messages which it transmits over the Event Data Interface to the Event Data Manager.

**Event Data File:** a collection of Event Data Records sent by an Event Data Manager to an External Support System over the Bulk External Transfer Interface.

**Event Data Functions:** the functions that the Event Data Collection Element and the Event Data Manager perform on Event Data. These functions are Data Generation, Data Aggregation, Data Formatting, Data Correlation, and Data Distribution.

**Event Data Interface:** the interface between a DAVIC Element and the Event Data Manager. This interface supports: (1) registration by the DAVIC Elements with the Event Data Manager, and (2) the delivery of Event Data to the Event Data Manager.

**Event Data Manager:** a DAVIC system component that supports the Event Data Interface and the External Transfer interface. It accepts Registration Messages and Event Data Messages over the Event Data Interface. For received Event Data, it performs the Event Data Functions of Data Formatting, Data Correlation, and Data Distribution.

**Event Data Message:** a message containing Event Data sent to report a usage event of a registered event type.

**Event Data Record:** a set of associated Event Data. These records are sent in transactional messages and files from an Event Data Manager to an External Support System over the External Transfer Interface.

**Event Trace Diagram:** Interaction Diagram or Message Trace Diagram.

**External Support System :** a component external to the DAVIC System which receives Usage Data through the Usage Data Transfer Interface (Interactive or Bulk).

**FTP:** File Transfer Protocol. FTP allows a connection to be made between two Internet computers in order to transfer files between them.

**function:** features of a Digital Audio Visual System that are realized through Services. For example, interactive play control (VCR-type controls) is a function. (see also Service)

**functional control entities:** call/connection entity and session entity.

**functional entity:** process which terminates an information flow.

**Functional Model (OMT):** shows how objects in the system interact.

 © ISO/IEC 1999 - All rights reserved

Copyright International Organization for Standardization
Provided by IHS under license with ISO
No reproduction or networking permitted without license from IHS Not for Resale

**Gopher**: file and information retrieval system that presents distributed documents and directories on the Internet in an integrated manner to the user. Gopher clients are typically text based information retrieval tools.

**hierarchy:** an arrangement of objects in order of rank; some objects in the arrangement are subordinate to others; objects of the same hierarchical rank are peer objects.

**host:** a piece of equipment where one or more devices can be connected (eg. an IRD, a VCR, a PC or a STU).

**HTML**: Hypertext Mark-up Language. HTML is a document formatting language used to specify the format of Hypertext documents on the World Wide Web. HTML consists of ASCII text files with special tags to specify formatting information. This includes the specification of Hypertext links, graphics information and plain text.

**HTTP**: Hypertext Transfer Protocol. HTTP is the protocol Web servers and browsers use to send request, accept request, send responses and receive response of documents on the World Wide Web. It also specifies how to initiate transfers of data using other protocols such as FTP and SMTP.

**hyperlink:** a relationship between two anchors.

**Hypertext**: hypertext is text that a user may select in some manner to cause some different set of information to be retrieved and displayed. A common example is a link on a Web page, which may be selected causing a new Web page to be retrieved.

**identifier:** the unique identification of an object, formed from a qualifier part and a name.

**Implementation Conformance Statement (ICS):** a statement made by the supplier of an implementation or system claimed to conform to a given specification, stating which capabilities have been implemented. [ISO/IEC 9646]

**Implementation eXtra Information for Testing (IXIT):** a statement made by a supplier or implementers of an implementation under test which contains or references all of the information (in addition to that given to the ICS) related to the implementation under test and its testing environment, which will enable the test laboratory to run an appropriate test suite against the implementation under test. [ISO/IEC 9646]

**information flow:** the transfer of information from an information-source-object to an information-destination-object.

**information flow entities:** the Information Flow Entities define the various types of information that pass through the DSRM. These flows encompass the User, Control and Management functions defined in the abstract system reference model. (S1-S5).

**instance:** the definition of an object with all its properties. An instance of a type is an object which has all the properties of the type as given in the type definition. [ITU: SDL]

**inter layer interface:** an interface between a subordinate and superior service layer

**Interaction Diagram:** similar in principle to collaboration diagrams. Show the interaction between objects over time.

**Interactive External Transfer Interface:** the portion of the External Transfer Interface used for transactional transfer of Event Data Records.

**Interactive:** the portion of the Usage Data Transfer Interface used for transactional transfer of Usage Data Records.

**interface:** a point of demarcation between two blocks through which information flows from one block to the other. See logical and physical interface definitions for further details. A DAVIC interface may be physical-interface or a logical-interface.

**interface definition: i**nterface definitions are the detailed physical definitions used to define the method of interaction between system entities. These definitions are provided for the various reference points. A finite set of interfaces may exist at each particular reference point.

**interface image:** a logical interface through which transparent information flows from one block to another; the characteristics of the interface image are defined at another reference point.

**Intermediate-Service Provider (ISP):** ISPs provide adjunct services and convey information among ESPs and ESCs.



Copyright International Organization for Standardization
Provided by IHS under license with ISO
No reproduction or networking permitted without license from IHS Not for Resale

**Internet:** the term Internet is used in many ways in this international standard. It is widely understood to mean the global network of computers tied together via different types of networks. These computers use a standard set of protocols to communicate, mainly TCP/IP and UDP/IP.

**Interoperability Testing:** testing the extend to which two or more implementations behave together as expected by the relevant specification.

**joint stereo:** a coding option in MPEG-1 audio that exploits the redundancy between the left and right audio channels.

**key management:** the generation, storage, distribution archiving, deletion, revocation, registration, and deregistration of cryptographic keys.

**layer:** a collection of objects of the same hierarchical rank.

**layer management:** a set of objects in a given service layer that establish and control what services are provided by servers to what users on any plane in the service layer.

**layer service:** functions provided by a layer to a layer above through a Service Access Point.

**Level 1 Gateway (L1GW):** see Basic Level 1 Gateway and Enhanced Level 1 Gateway.

**Level 2 Gateway (L2GW):** provides components offering navigational services allowing choice of service providers and listings of services provided.

**level of abstraction:** one of the levels of a block tree diagram. A description of a system is one block at the highest level of abstraction and is shown as a single block at the top of a block tree diagram.

**logical information flow path:** a sequence of information transfers from an initial information source object to a terminal information destination object either directly or through intermediate objects; different physical information flow paths may be associated with a logical information flow path segment or with the entire path in different implementations.

**logical interface:** an interface where the semantic, syntactic, and symbolic attributes of information flows is defined. Logical interfaces do not define the physical properties of signals used to represent the information. A logical interface can be an internal or external interface. It is defined by a set of information flows and associated protocol stacks.

**Management Entity:** the Management Entity is responsible for the operation and maintenance functions of a network. Several instances of information flow S5 exist for the Management Entity.

**Management Plane (MP):** a plane that contains those interfaces and functions which support interactions which may be typified as being temporally disjoint from an off-hook interaction. Interactions among Management Plane objects may also occur concurrently with an off-hook interaction.

**management-information:** information exchanged by Management Plane objects; may be content-information or control-information.

**Message Trace Diagram**: Interaction Diagram or Event Trace Diagram.

**Method:** a systematic way to achieve a particular goal.

**Methodology:** a coherent, integrated set of methods from which a coherent sub-set can be selected for particular applications. A methodology should contain at least four components:

1. a conceptual model of constructs essential to the problem;
2. a set of procedures suggesting the direction and order to proceed;
3. a series of guidelines identifying things to be avoided;
4. a collection of evaluative criteria for assessing the quality of the product.

**Methodology framework:** a way, or structure, that supports a number of methods and languages to be used together when developing a system.

**MHEG-5 class:** the abstract definition of exchanged and internal attributes of parts of interchangeable multimedia/hypermedia objects. It also defines the semantics of internal behaviours and the effect of MHEG-5 actions for these objects.

 © ISO/IEC 1999 - All rights reserved

--`,,```,,,,````-`-`,,`,,`,`,,`---

Copyright International Organization for Standardization
Provided by IHS under license with ISO
No reproduction or networking permitted without license from IHS Not for Resale

**MHEG-5 object:** an instance of an MHEG-5 class. An MHEG-5 object is not a physical object, but rather an abstraction that may have many representations of different types. Various software services handle such representations.

**monomedia component:** a collection of data representing a single type of audiovisual information.

**monospace format:** a presentation format of characters in which each character utilizes a character matrix of the same size, independent of the width and height of the character.

**multimedia component:** a collection of data comprising one or more multimedia components.

**name:** a lexical unit used to name SDL objects.

**navigation:** the process of reaching a service objective by means of making successive choices; the term may be applied to the selection of a service category, a service provider or an offer within a particular service.

**network:** a collection of interconnected elements that provides connection services to users.

**network control function:** the Network Control Function is responsible for the error-free receipt and transmission of content flow information to and from the Server.

**Network Element (NE):** a component of a telecommunications network whose function it is to provide communications services to users. These functions include information transport, adaptation, switching and control.

**Network Interface Unit (NIU):** the NIU accepts network specific content-information flows from the Delivery System and provides a non-network specific interface to the Connectivity Entity in the STU. (additional definitions of the NIU may exist).

**Network Related Control:** the Network Related Control entity provides control functions for network configuration, connection establishment and termination and information routing in a network instance of a Delivery System.

**Network Service Access Point (NSAP):** an interface between SL2 Session Layer and SL3 Network Service Layer objects through which the SL3 (server) objects provide services to the SL2 (client) objects.

**Network Service Layer (SL3):** a collection of objects that enable client objects to communicate with remote peers: SL3 objects provide basic lower-layer network services such as addressing/routing, connection services, and physical layer services to SL2 clients.

**Network Termination (NT):** the element of the Access Network performing the connection between the infrastructure owned by the Access Network operator and the Service Consumer System (ownership decoupling). The NT can be passive or active, transparent or not.

**non-repudiation:** the proof of the origin and reception of a message. This means that the sender cannot deny the sending of the message and the receiver cannot deny the reception of the message.

**Object:** a representation of a system component that has both state and behavior.

**Object Collaboration Diagram:** provides a snapshot of a systems state and is used to emphasize relationships.

**Object Model:** shows the static relationships between classes. The Object Model is described by a class diagram. The Object Model defines the behavior required by the various classes to ensure that the use cases and business rules are supported correctly.

**Operations Support System (OS):** a system whose main function is to run applications that manage network elements, networks and services.

**Package:** a nested name space in a model which contains classes.

**partition:** a decomposition or subdivision of an object into smaller objects; the created objects are peers with respect to each other, but are hierarchically subordinate to the original partitioned object.

**partitioning:** the subdivision of a unit into smaller components which when taken as a whole have the same behavior as the original unit. Partitioning does not affect the static interface of a unit.

**PC card:** a physical packaging standard conforming to PCMCIA Type 1 or Type 2 implementations.

**peer:** of the same rank or order: peer objects belong to the same layer (category or classification).

**peer-entity authentication:** corroboration that a communicating entity has the claimed identity.



Copyright International Organization for Standardization
Provided by IHS under license with ISO
No reproduction or networking permitted without license from IHS Not for Resale

**physical information flow path:** a channel or a sequence of channels that constitutes a real or virtual connection between an information source object and an information destination object.

**physical interface:** an interface where the physical characteristics of signals used to represent information and the physical characteristics of channels used to carry the signals are defined. A physical interface is an external interface. It is fully defined by its physical and electrical characteristics. Logical information flows map to signal flows that pass through physical interfaces.

**plane:** a category that identifies a collection of related objects, e.g., objects that execute similar or complementary functions; or peer objects that interact to use or to provide services in a class that reflects authority, capability, or time period. Management-plane service objects, for example, may authorize ISP-clients' access to certain control-plane service objects that in turn may allow the clients to use services provided by certain user-plane objects.

**port:** an abstraction used by transport protocols to distinguish among multiple destinations associated with particular applications running on a host computer: an application can specify the ports it wants to use; some ports are reserved for standard applications/services such as e-mail (also known as well-known ports).

**primitive:** an abstract interaction between a user of a layer service and the provider of a layer service; four basic primitive types are commonly used: (service-) request, indication, response, and confirmation.

**principal service:** the top service class of peer objects interacting in some defined context.

**Principal Service Layer (SL0):** a collection of associated objects that interact with peers to use or provide principal service, e.g., sending or receiving and presenting content-information such as movies, music, or stock market data to the end information users (human or machine); SL0 objects rely on services provided by SL1 objects.

**privacy:** privacy protects authorized participants from illegal utilization or knowledge of information related to their components in the DAVIC System.

**procedure:** an encapsulation of the behavior of part of a process. A procedure is defined in one place but may be referred to several times within a process.

**process:** a communicating extended finite state machine. Communication can take place via signals or shared variables. The behavior of a process depends on the order of arrival of signals in its input port.

**process instance:** an instance of a process created at system creation time or dynamically as a result of a create [request].

**Product Entity:** the entity in the STU responsible for accepting transparent content-information and presenting the information to the appropriate using machine.

**protocol:** set of message formats (semantic, syntactic, and symbolic rules) and the rules for message exchange between peer layer entities (which messages are valid when).

**provider:** an object that interacts with clients or users.

**proxy signalling agent:** signalling process performing end point signalling function on behalf of the end user. Extended definition is required if proxy is used also in hybrid network, e.g., MPEG HFC and ATM.

**Q.2931 MACRO:** single notation which summarizes the exchange of information (S4 flow) between call/connection control entities during the call set-up or release phases.

**randomization:** the process of removing auto-correlation from a signal, i.e. white noise spectrum shaping at the transmitter side to ease symbol or bit timing recovery at the receiver side.

**Real-time**: quality of a process, the execution of which is determined or controlled in time. The term is sometimes extended to refer to a delivery process which is perceived fast enough to be considered as almost instantaneous.

**Real-time Payment:** the determination of the payment method desired by the end Service Consumer and the access to corresponding account information, if any.

**Real-time Pricing:** the determination of the price of a service soon after a pre-defined event occurs, for example an end Service Consumer’s request for information about a service or the conclusion of a service usage instance.

**real-time stream:** an MPEG-2 transport stream containing monomedia components of which the timing of the decoding and presentation in an STU is controlled by the characteristics of the stream during the delivery of the stream to the STU.

 © ISO/IEC 1999 - All rights reserved

--`,,```,,,,````-`-`,,`,,`,`,,`---

Copyright International Organization for Standardization
Provided by IHS under license with ISO
No reproduction or networking permitted without license from IHS Not for Resale

**reference point:** a set of interfaces between any two related blocks through which information flows from one block to the other. A reference point comprises one or more logical (non-physical) information-transfer interfaces, and one or more physical signal-transfer interfaces.

**refinement:** the addition of new details to the functionality at a certain level of abstraction. The refinement of a system causes an enrichment in its behavior or its capabilities to handle more types of signals and information, including those signals to and from the environment. Compare with partitioning.

**Registration Message:** a message used to register to send (for a DAVIC Element) or receive (for an External Support System) Event Data.

**rendering:** the process in the STU to combine one or more monomedia components such as characters, text, and graphical objects into one presentation on a screen.

**resource:** a unit of functionality provided by the host for use by a device. A resource defines a set of objects exchanged between device and host by which the device uses the resource.

**S1:** content-information flow, from a source to a destination object on the User Plane of any service layer.

**S2:** control-information flow from a source to a destination object on the Control Plane of the Application Service Layer (SL1).

**S3:** control-information flow from a source to a destination object on the Control Plane of the Session and Transport Service Layer (SL2).

**S4:** control-information flow from a source to a destination object on the Control Plane of the Network Service Layer (SL3).

**S5:** management-information flow from a source to a destination object on the Management Plane of the container object: the objects may be peers (service layer is known), or the service layer may be unspecified.

**Scenario Diagram:** shows how the Objects ion a system interact over time.

**scope unit:** the concrete grammar which defines the range of visibility of identifiers. Examples of scope units include the system, block, process, procedure, partial typed definitions and service definitions.

**scrambling:** the process of making a signal unintelligible at the transmission point in order that it can only be received if an appropriate descrambling system is in place at the point of reception. Scrambling can be applied to audio, video or data signals.

**SDL (CCITT Specification and Description Language):** a formal language providing a set of constructs for the specification of the behavior of a system.

**SDL/GR:** the graphical representation in SDL. The grammar for SDL/GR is defined by the concrete graphical grammar and the common textual grammar.

**security auditing:** a security audit trail, or log, is data collected and potentially used to facilitate a security audit. A security audit is an independent review and examination of system records and activities in order to test for adequacy of system controls, to ensure compliance with established policy and operational procedures, to detect breaches in security, and to recommend any indicated changes in control, policy and procedures.

**server:** any service providing system.

**service:** a set of elementary streams offered to the user as a program. They are related by a common synchronization. They may be made of different data, eg. video, audio, subtitles, other data.

**Service Access Point (SAP):** an interface between two service layers through which the higher layer may access services provided by the lower layer.

**Service Data:** data, such as prices and account (e.g., credit card) numbers, needed dynamically by DAVIC Elements or External Support Systems. This data is required or provided by an end Service Consumer during the billing-related part of a service session (e.g., when the price of a service is being provided, when the end Service Consumer chooses a method of payment) and, therefore, must be delivered promptly through the Service Data Interface.

**Service Data Functions:** the functions implemented by External Support Systems and offered to DAVIC Elements through the Service Data Interface. These functions include Real-time Pricing, Spending Control, Real-time Payment and Account Access.



Copyright International Organization for Standardization
Provided by IHS under license with ISO
No reproduction or networking permitted without license from IHS Not for Resale

**Service Data Interface:** a transactional interface between DAVIC Elements and External Support Systems used by DAVIC Elements and External Support Systems to promptly deliver Service Data.

**Service Data Message:** a message containing Service Data sent over the Service Data Interface.

**Service Gateway (SGW):** an element of the service domain through which a client can browse available services; also a mechanism for a client to obtain an object reference (message connection) to an instance of a service.

**Service Information (SI):** digital data describing the Delivery System, content and scheduling/timing of MPEG-2 Transport Streams. It includes MPEG-2 PSI together with independently defined extensions.

**service layer:** a set of service objects of the same hierarchical rank

**service object:** an object characterized in terms of the services it uses or provides, and not in terms of the physical attributes: different real systems may use or provide identical services.

**Service Provider:** an entity that provides a service to a client.

**Service Provider System (SPS):** a general reference to ESP or ISP systems.

**Service Related Control:** an entity that provides all control functions for the services that are offered by a network instance of the Delivery System. The DSRM allows for SL0, SL1 and SL2 Service Related Control subsets.

**session:** an interval during which a logical, mutually agreed correspondence between two objects exists for the transfer of related information. A session defines a relationship between the participating users in a service instance.

**Session and Transport Service Layer (SL2):** a collection of objects that interact to establish and maintain an environment for local or remote application-layer services; client of network services when remote services are used or provided: SL2 objects provide session services over reliable transport to SL1 clients.

**Session Control Function:** This entity, in a Service Provider System, is responsible for establishing and terminating the environment in which an application will operate. This environment includes the quality of service requirements for both the application and product entities.

**session entity:** user or network process which terminates S3 flow (ses).

**Session Service Access Point (SSAP):** an interface between an Application Service Layer and a Sessions and Transport Service Layer through which SL2 (server) objects provide services to SL1 (client) objects.

**session services:** provide basic functions to create, modify, maintain, and tear down sessions (negotiate and allocate network resources).

**Set Top Box (STB):** a module that comprises both Set Top Unit (STU) and Network Interface Unit (NIU) functional elements. The STB may be either “integrated” or “modular”. An integrated STB is designed for connection to a single DAVIC A1 or equivalent interface. A modular STB may be equipped with a DAVIC A0 or equivalent interface to enable connection of a range of NIUs.

**Set Top Unit (STU):** a module that contains the “network independent” functionalities of a Set Top Box (STB). The following functionalities are contained in a typical STU:- Processing & Memory Functions; MPEG2 Demux & AV Decoders; Graphics Display; Modulator Output for TV; Peripheral Interfaces.

**signal:** an instance of a defined signal type representing information meaningful to a process instance.

**signal route:** indicates the flow of signals between a process type and either another process type in the same block or the channels connected to the block. [1]

**smart card:** a physical packaging standard conforming to ISO-7816 Part 1 and 2.

**socket:** communications transport API that provides applications interprocess communication services using the underlying services provided by TCP/IP; the API allows an application to open a socket, request delivery services, and bind the socket to the desired destination and then send or receive data.

**specification:** a definition of the requirements of a system. A specification consists of general parameters required of the system and the functional specification of its required behavior. Specification may also be used as a shorthand for specification and/or description, e.g., in SDL specification or system specification.

 © ISO/IEC 1999 - All rights reserved

Copyright International Organization for Standardization
Provided by IHS under license with ISO
No reproduction or networking permitted without license from IHS Not for Resale

**Spending Control:** the monitoring of spending during and across service usage instances, and the indication that a budget limit or credit limit has been reached.

**start-tag:** descriptive markup that identifies the start of an element.

**State Transition Diagram:** shows the state of a given context, the events that cause a transition from one state to another and the actions that result.

**Stream Service Element:** this Service Provider System entity allows for the processing of the content-information flows at the stream level. The content stream is a sub-set of the actual content-information flow and processing at the stream level allow the ability to uniquely align a service offering.

**subblock:** a block contained within another block. Subblocks are formed when a block is partitioned.

**subchannel:** a channel formed when a block is partitioned. A subchannel connects a subblock to a boundary of the partitioned block or a block to the boundary of a partitioned channel.

**subsignal:** a refinement of a signal and may be further refined.

**subsystem:** a decomposition of a system into smaller collections of objects; decomposition may be performed recursively.

**Support Data:** data, such as prices and account (e.g., credit card) numbers, needed dynamically by DAVIC Elements or External Support Systems. This data is required or provided by an Service Consumer during the billing-related part of a service session (e.g., when the price of a service is being provided, or when the Service Consumer chooses a method of payment).

**symbol:** a bit or a defined sequence of bits.

**system:** a collection of interacting objects that serves a useful purpose; typically, a primary subdivision of an object of any size or composition (including domains).

**System Conformance Statement (SCS):** a document summarizing which OSI International Standards, ITU-T Recommendations or Profiles are implemented and to which ones conformance is claimed. [ISO/IEC 9646]

**System Entity:** the main DSRM System Entities are the Service Provider System (SPS), Delivery System (DS), and Set Top Unit (STU).

**tag:** markup that delimits an element.

**Technique:** a way that a method is realized, or implemented.

**Telecommunications Management Network (TMN):** a network consisting of Operations Support Systems (OS) and data networking facilities whose purpose it is to provide management capabilities for telecommunications networks, network elements, resources and services.

**telecommunication service:** that which is offered by an Administration to its customers in order to satisfy a specific telecommunication requirement. (ITU-T Recs. I.112, M.60, Q.9).

**Telnet:** application providing a direct connection from one computer to another computer. The first computer behaves as a terminal of the host. All processes are executed on the host computer.

**Test Laboratory (TL):** an organization that carries out conformance testing and/or interoperability testing. [ISO/IEC 9646]

**Time Division Multiple Access (TDMA):** method to access a shared transmission medium where time is divided into slots and the nodes connected to the medium are synchronized by assigning each one of them one or more specific time slots to transmit.

**Tool:** a software item which automates or supports the use of a particular method or language [REED93]. In system/software engineering, a step-by-step formalized, manual or automated process for solving an engineering problem. [BRAE93]

**trading conditions:** commercial or contractual terms which, for instance, may be negotiated between a Content Provider and a Service Provider.

**transparent information:** information that is not significant semantically to an object used to transport the information.

**Transport Stream:** MPEG-2 Transport Stream.



--`,,```,,,,````-`-`,,`,,`,`,,`---

Copyright International Organization for Standardization
Provided by IHS under license with ISO
No reproduction or networking permitted without license from IHS Not for Resale

**type:** a set of properties for instances. Examples of types in SDL include blocks, processes, services, signals. and systems.

**upstream:** information flow direction is from an ESC System to an ESP System.

**Usage Data:** data relating to usage of services and resources, typically needed for financial transactions involving Service Consumers, Network Providers, Service Providers and Content Providers. This data is collected from DAVIC Elements by DAVIC System Managers using the Usage Data Collection Interface, and is delivered to External Support Systems by DAVIC System Managers using the Usage Data Transfer Interface.

**Usage Data Accumulation:** the process of summarizing raw Usage Data.

**Usage Data Assembly:** the process of gathering together all of the Usage Data generated by a specific DAVIC Element for a specific use of a service.

**Usage Data Collection Administration:** the process of determining the disposition of logged Usage Data, providing External Support Systems access to the Usage Data, and scheduling the reporting of Usage Data based on pre-determined rules about the data needed for the External Support Systems.

**Usage Data Collection Element:** the portion of each DAVIC Element which generates Usage Data and transmits the data to the DAVIC System Manager over the Usage Data Collection Interface. This element could also perform Usage Data Accumulation, Usage Data Validation, Usage Data Assembly and Usage Data Formatting.

**Usage Data Collection Interface:** the interface between a DAVIC Element and a DAVIC System Manager. This interface supports the delivery of Usage Data to the DAVIC System Manager.

**Usage Data Correlation Support:** the process of supporting the correlation (i.e., association) of Usage Data generated by different DAVIC Elements for the same service usage instance. This support includes producing correlation keys, administering correlation keys, exchanging correlation keys, inserting correlation keys into Usage Data Records and correlating Usage Data based on correlation keys.

**Usage Data File:** a collection of Usage Data Records sent by a DAVIC System Manager to an External Support System over the Usage Data Transfer Interface.

**Usage Data Formatting:** the process of creating a structured representation of unformatted Usage Data using a pre-defined format.

**Usage Data Functions:** the functions that the Usage Data Collection Element and the DAVIC System Manager perform on Usage Data. These functions are Usage Data Generation, Usage Data Accumulation, Usage Data Assembly, Usage Data Validation, Usage Data Formatting, Usage Data Correlation Support and Usage Data Collection Administration.

**Usage Data Generation:** the process of determining what Usage Data must be measured and recorded, and producing this data.

**Usage Data Interface:** the Event Data Interface, the Service Data Interface and/or the External Transfer Interface. The main subject of this part of the specification.

**Usage Data Record:** a set of associated Usage Data. These records are sent in transactional messages over the Usage Data Collection Interface, and in transactional messages and files over the Usage Data Transfer Interface.

**Usage Data Transfer Interface:** the interface between a DAVIC System Manager and an External Support System. This interface has two subparts for different modes of data transfer. The bulk transfer part is used to transfer a collection of Usage Data Records in the form of a file. The interactive transfer part is used for transactional transfer of Usage Data Records.

**Usage Data Validation:** the process of editing Usage Data to ensure that it meets specific integrity checks and conforms to semantic and syntactic rules.

**Use Case Diagram:** shows the system’s main Use Cases and the Actors that interact with them.

**Use Case Modeling:** requirements analysis technique. Use Cases capture the functional requirements of a system.

**user:** a service consuming object or system (block).

**User Plane (UP):** a classification for objects whose principal function is to provide transfer of (end) user information: user information may be user-to-user content (e.g., a movie), or private user-to-user data.

 © ISO/IEC 1999 - All rights reserved

--`,,```,,,,````-`-`,,`,,`,`,,`---

Copyright International Organization for Standardization
Provided by IHS under license with ISO
No reproduction or networking permitted without license from IHS Not for Resale

**Value-Added Service Provider (VASP):** this provider offers, for example, a Video-on-Demand Service to the end-user. Within the Systems Reference Model this is the ESP.

**variable:** an entity owned by a process instance or procedure instance which can be associated with a value through an assignment statement. When accessed, a variable yields the last value which was assigned to it.

**virtual channel:** communication channel that provides for the sequential unidirectional transport of ATM cells.

**virtual machine (VM)**: an abstract specification of a micro-processor and its behaviour
NOTE: A VM may be implemented on different hardware processors. A VM therefore implements the mechanism for all these processors to execute the same instruction set. It is also possible for a micro-processor to be designed so that its instruction set is identical to that of a VM. VM code can be used to make software portable. In the context of DAVIC, the VM is used to extend interoperability by allowing program code produced once to be delivered to and executed on any compliant STU.

**WAIS**: Wide Area Information Search. WAIS is a network service for database browsing using specific search criteria. Requests must be made to a given WAIS server and the response consists of a list of documents and references to other WAIS servers.

**World Wide Web**: the WWW consists of a collection of servers on the Internet, which through a common communication protocol (HTTP), appear as a large distributed collection of information. Originally intended to regroup capabilities of gopher and WAIS and to extend them, it is now thought of as a network containing HTML documents that are accessed by a specific tool called a Web browser.



--`,,```,,,,````-`-`,,`,,`,`,,`---

Copyright International Organization for Standardization
Provided by IHS under license with ISO
No reproduction or networking permitted without license from IHS Not for Resale

# Annex B
(informative)
# Acronyms and abbreviations

The following acronyms and abbreviations are used in this international standard. Some acronyms and abbreviations may have more than one definition. The context determines which interpretation applies in such instances.

| | |
|---|---|
| AAL | ATM Adaptation Layer |
| AC | Access Control |
| AC-3 | ATSC A52 Audio |
| ACSE | Application Control Service Element |
| ACTS | Advanced Communications Telematics Services |
| ACU | Access Control Unit |
| ADSL | Asymmetric Digital Subscriber Line |
| AE | Application Entity |
| AFI | Authority and Format Identifier |
| AIFF | Audio Interchange File Format |
| AII | Active Input Interface |
| AIS | Alarm Indication Signal |
| AN | Access Network, or<br>Access Node |
| ANSI | American National Standards Institute |
| ANT | Active Network Termination |
| AOI | Active Output Interface |
| AOI | Active Output Interface |
| API | Application Programming Interface |
| ASAP | Application(-Service-Layer) Service Access Point |
| ASCII | American Standard Code for Information Exchange |
| ASE | Application Service Element |
| ASN.1 | Abstract Syntax Notation 1 |
| ASRM | Abstract System Reference Model |
| ATM | Asynchronous Transfer Mode |
| ATSC | Advanced Television Systems Committee |
| AU4 | Administrative Unit - 4 |
| AU44C | Administrative Unit - 44C |
| AUG | Administrative Unit Group |
| AWG | American Wire Gauge |
| BAF | Bellcore Automatic Message Accounting Format |
| BasicL1GW | Basic Level 1 Gateway |
| BCC | Bearer Channel Connection |
| BCU | Broadcast Control Unit |
| BER | Bit Error Ratio, or<br>Basic Encoding Rules (re.: ASN.1) |
| B-ETI | Bulk External Transfer Interface |
| B-ISDN | Broadband Integrated Services Digital Network |
| BNF | Backus-Naur Format |
| bslbf | bit string left bit first |
| B-UDTI | bulk usage data transfer interface |
| BW | Bandwidth |
| c/c | call/connection entity |
| CA | Conditional Access |
| CAGR | Customers' Anticipated Growth Rate |
| CAP | Carrierless Amplitude and Phase modulation |
| CASE | Computer Aided Software Engineering |
| CATV | Cable Television, or<br>Community Antenna Television |
| CBD | Connection Block Descriptor |

 © ISO/IEC 1999 - All rights reserved

Copyright International Organization for Standardization
Provided by IHS under license with ISO
No reproduction or networking permitted without license from IHS
Not for Resale

| | |
|---|---|
| CCIR | Comite Consultatif International de la Radiodiffusion |
| CCITT | Comité Consultatif International Telegraphique et Telephonique |
| CCP | Channel Change Protocol |
| CFP | Call for Proposals |
| CGM | Computer Graphics Metafile |
| CI | Content Item |
| CIE | Content Item Element |
| CLNP | Connectionless Network Protocol |
| CLP | Cell Loss Priority |
| CLUT | Color LookUp Table |
| CMB | CRC Message Block |
| CMIP | Common Management Information Protocol |
| CMIS | Common Management Information Service |
| CMISE | Common Management Information Service Element |
| CMSL | Content Metadata Specification Language |
| CN | Core Network |
| CORBA | Common Object Request Broker Architecture |
| CP | Common Part, or<br>Control Plane |
| CPCS | Common Part Convergence Sub-layer |
| CPE | Customer Premises Equipment |
| CPN | Customer Premises Network |
| CPS | Content Provider System |
| CRC | Cyclic Redundancy Check |
| CRM | Connection Resource Manager |
| CTP | Connection Termination Point |
| CW | Control Word |
| DAB | Digital Audio Broadcasting |
| DAVIC | Digital Audio-Visual Council |
| DBR | Deterministic Bit Rate |
| DBS | Digital Broadcast Satellite |
| DE | DAVIC Element |
| DFP | Downstream Frame Period |
| DII | DAVIC Interface Initialization |
| DIIP | DAVIC Interface Initialization Protocol |
| DIS | Draft International Standard |
| DLL | Data Link Layer |
| DS | Delivery System, or<br>Descrambling, or<br>Downstream |
| DS3 | Digital Signal - Level 3 |
| DSA | Digital Signature Algorithm |
| DSDM | DAVIC System Dynamic Modeling |
| DSM | DAVIC System Manager |
| DSM-CC | Digital Storage Media - Command and Control |
| DSM-CC U-N | DSM-CC User-Network |
| DSM-CC U-U | DSM-CC User-User |
| DSRM | DAVIC System Reference Model |
| DSS | Digital Signature Standard |
| DSUR | Delivery System Usage Records |
| DTS | Decoding Time Stamp |
| DTTB | Digital Terrestrial Television Broadcasting |
| DVB | Digital Video Broadcasting |
| DVB-SI | DVB - Service Information |
| EBCDIC | Extended Binary Coded Decimal Interchange Code |
| ECM | Entitlement Control Message |
| EDCE | Event Data Collection Element |
| EDI | Event Data Interface, or<br>Electronic Data Interchange |



Copyright International Organization for Standardization
Provided by IHS under license with ISO
No reproduction or networking permitted without license from IHS Not for Resale

| | |
|---|---|
| EDM | Event Data Manager |
| e-e cntrl | end-to-end control |
| EFD | Event Forwarding Discriminator |
| EL-FEXT | Equal Level - Far End Cross Talk |
| EMC | Electromagnetic Compatibility |
| EMM | Entitlement Management Message |
| EMMA | European Multimedia experiments in ATM environment |
| EMS | Element Manager System |
| EnhancedL1GW | Enhanced Level 1 Gateway |
| EPG | Electronic Program Guide |
| ESC | End Service Consumer |
| ESCS | End-Service Consumer System |
| ESF | Extended SuperFrame |
| ESI | End System Identifier |
| ESIGN | Efficient digital SIGNature scheme for smart cards |
| ESP | End Service Provider |
| ESPS | End-Service Provider System |
| ESS | External Support System |
| ETI | External Transfer Interface |
| ETR | European Telecommunications Recommendation |
| ETS(I) | European Telecommunications Standard(s Institute) |
| FCC | Federal Communications Committee |
| FEC | Forward Error Correction |
| FEXT | Far End Cross Talk |
| FFS | For Further Study |
| FIFO | First In First Out |
| FITL | Fiber Into The Loop |
| fpvsbf | floating point value sign bit first |
| FR | Frame Relay |
| FSN | Full Service Network |
| FTP | File Transfer Protocol |
| FTTB | Fiber to the Building |
| FTTC | Fiber to the Curb |
| FTTH | Fiber to the Home |
| GDMO | Guidelines for the definition of managed objects |
| GIOP | Generic Inter-ORB Protocol |
| GPS | Global Positioning System |
| GSM | Global System for Mobile communications |
| HDTV | High Definition Television |
| HEC | Header Error Control |
| HFC | Hybrid Fiber Coax |
| HFTTB | Hybrid Fiber To The Building |
| HMI | Human Machine Interface |
| HMSC | Human Machine Service Consumer |
| HO-DSP | High Order - Domain Specific Part |
| HRM | High Reliability Marker |
| HTML | HyperText Markup Language |
| $I^2C$ | Inter-Integrated Circuit |
| IBC | Inter-Integrated Circuit |
| ID | Identification |
| IDL | Interface Definition Language |
| IEC | International Electrotechnical Commision |
| IEEE | Institute of Electrical and Electronics Engineers |
| IETF | Internet Engineering Task Force |
| I-ETI | Interactive External Transfer Interface |
| IIOP | Internet Inter-ORB Protocol, or<br>Internet Inter-Object Protocol |
| ILMI | Interim Local Management Interface |
| IMA | Interactive Multimedia Association |

 © ISO/IEC 1999 - All rights reserved

Copyright International Organization for Standardization
Provided by IHS under license with ISO
No reproduction or networking permitted without license from IHS Not for Resale

| | |
|---|---|
| IN | Intelligent Network |
| INVOD | Intelligent Near Video On Demand |
| IOP | Inter-ORB Protocol |
| IP | Internet Protocol |
| IPR | Intellectual Property Rights |
| ISDN | Integrated Services Digital Network |
| ISO | International Organization for Standardization |
| ISP | Intermediate Service Provider, or<br>Internet Service Provider |
| ITU | International Telecommunications Union |
| ITU-T | ITU - Telecommunications Standardization Sector |
| I-UDTI | Interactive usage data transfer interface |
| IWU | Interworking Unit |
| JBIG | Joint Bi-level Image Group |
| JPEG | Joint Photographic Experts Group |
| KOD | Karaoke-On-Demand |
| L1GW | Level 1 Gateway |
| L2GW | Level 2 Gateway. |
| LAN | Local Area Network |
| LAPB | Link Access Procedure Balanced |
| LAPD | Link Access Procedure D-Channel |
| LE | Local Exchange |
| LEWS | Local Exploitation Work station |
| LFSR | Linear Feedback Shift Register |
| LLC | Logical Link Control |
| LMDS | Local Microwave Distribution System |
| LSB | Least Significant Bit |
| MAC | Medium Access Control |
| Mbps | Megabits per second |
| MF | Management Function |
| MFS | Multiframe Synchronization |
| MHEG | Multimedia and Hypermedia information coding Experts Group |
| MIB | Management Information Base |
| MIME | Multimedia Internet Mail Extensions |
| MMC | Multimedia Conferencing |
| MMDS | Multi-channel Microwave Distribution System |
| MMS | Multimedia Conference Services |
| MO | Managed Object |
| MOC | Managed Object Class |
| MOD | Movies-On-Demand |
| MP | Management Plane |
| MPEG | Moving Picture Experts Group |
| MPEG-TS | MPEG-2 Transport Stream |
| MPTS | Multi-Program Transport Stream (ISO/IEC 13818–1 MPEG-2 Systems) |
| MS | Multiplex Section |
| MSB | Most Significant Bit |
| MUX | Multiplex |
| MVDS | Multimedia Video on Demand System |
| NC | Network Computer |
| NE | Network Element |
| NEF | Network Element Functionality |
| NIF | Network Interface Function |
| N-ISDN | Narrowband ISDN |
| NIU | Network Interface Unit |
| NMF | Network Management Forum |
| NMS | Network Management System |
| NNI | Network Node Interface |
| NOD | Network Ownership Decoupling, or<br>News On Demand |



--`,,```,,,,````-`-`,,`,,`,`,,`---

Copyright International Organization for Standardization
Provided by IHS under license with ISO
No reproduction or networking permitted without license from IHS Not for Resale

| | |
|---|---|
| NPT | Normal Play Time |
| NRC | Network Related Control |
| NRSS | National Renewable Security Standard committee |
| NRZ | Non-Return to Zero |
| NSAP | Network Service Access Point |
| NT | Network Termination |
| NTSC | National Television Systems Committee |
| NVOD | Near Video-On-Demand (Also N-VOD) |
| NW | Network |
| OAM | Operation Administration and Maintenance |
| OAM&P | Operations, Administration, Maintenance and Planning |
| OAN | Optical Access Network |
| OFDM | Orthogonal Frequency Division Multiplexing |
| OLT | Optical Line Termination |
| OMG | Object Management Group, OR<br>Object Modeling Group |
| OMG-CDR | Object Management Group - Common Data Representation |
| OMG-GIOP | Object Management Group - Generic Inter-ORB Protocol |
| OMG-UNO | Object Management Group - Universal Networked Object |
| OMT | Object Modeling Technique |
| ONC | Open Network Computing |
| ONP | Open Network Provision |
| ONU | Optical Network Unit |
| OO | Object Oriented |
| OOAD | Object Oriented Analysis and Design |
| ORB | Object Request Broker |
| OS | Operating System |
| OSB | Output Signal Balance |
| OSF | Operations System Functionality |
| OSI | Open Systems Interconnection (Reference Model) |
| PC | Personal Computer |
| PCMCIA | Personal Computer Memory Card International Association |
| PCR | Program Clock Reference, OR<br>Peak Cell Rate |
| PDH | Plesiochronous Digital Hierarchy |
| PDU | Protocol Data Unit, or<br>Packet Data Unit |
| PES | Packetized Elementary Stream |
| PG | Parental Guidance |
| PHY | Physical Layer |
| PID | Packet Identifier, or<br>Program Identification |
| PIN | Personal Identification Number |
| PKP | Public Key Partner |
| PLCP | Physical Layer Conversion Protocol |
| PLMN | Public Land Mobile Network |
| PM | Phase Modulation |
| PMD | Physical Medium Dependent |
| PMT | Program Map Table |
| PN | Program Number (MPEG-2) |
| PNG | Portable Network Graphics (specified by W3C) |
| PNO | Public Network Operator |
| PON | Passive Optical Network |
| POST | Power On Self Test |
| POTS | Plain Old Telephone System |
| PPI | Pay Per Information unit |
| PPM | Pulses Per Million |
| PPP | Point-to-Point Protocol, OR<br>Pay Per Page |

 © ISO/IEC 1999 - All rights reserved

Copyright International Organization for Standardization
Provided by IHS under license with ISO
No reproduction or networking permitted without license from IHS
Not for Resale

| | |
|---|---|
| P-PSN | Public Packet Switched Network |
| PPT | Pay Per Time |
| PPV | Pay-Per-View |
| PRBS | Pseudo Random Binary Sequence |
| pses | Pseudo-session control entity (used in some Internet Access scenarios) |
| PSI | Program Specific Information (MPEG-2) |
| PSK | Phase Shift Keying |
| PSTN | Public Switched Telephone Network |
| PTI | Payload Type Identifier |
| PTS | Presentation Time Stamp |
| PVC | Permanent Virtual Channel |
| QAM | Quadrature Amplitude Modulation |
| QoS | Quality of Service |
| QPSK | Quaternary Phase Shift Keying |
| RDM | Reference Decoder Model |
| RDN | Relative Distinguished Name |
| RF | Radio Frequency |
| RFC | Request for Comments |
| RGB | Red Green Blue |
| RL | Return Loss |
| ROSE | Remote Operation Service Element |
| RPC | Remote Procedure Call |
| RS | Reed-Solomon, OR<br>Regenerator Section |
| RSA | Rivest Shamir Adleman |
| RSVP | Resource ReServations Protocol |
| RTE | RunTime Engine |
| SAAL | Signaling ATM Adaptation Layer |
| SAP | Service Access Point |
| SAR | Segmentation and Re-assembly |
| SBR | Statistical Bit Rate |
| SC | Scrambling |
| SCR | Sustainable Cell Rate |
| SCS | Service Consumer System |
| SCTE | Society of Cable Telecommunications Engineers, Inc |
| SDB | Switched Digital Broadcast |
| SDH | Synchronous Digital Hierarchy |
| SDIE | Service Data Interaction Element |
| SDL | Specification and Description Language, or<br>Syntax Description Language |
| SDL/GR | The Graphical Representation in SDL |
| SDU | Service Data Unit |
| SDV | Switched Digital Video |
| SEL | Selector |
| Ses | Session control entity |
| SFP | SuperFrame Period |
| SFSC | SuperFrame Synchronization Control |
| SGML | Standard Generalized Markup Language |
| SGW | Service Gateway |
| SI | Service Information |
| SK | Secret Key |
| SL0 | Principal Service Layer identifier |
| SL1 | Application Service Layer identifier |
| SL2 | Session and Transport Service Layer identifier |
| SL3 | Network Service Layer identifier |
| SL-ESF | Signaling Link Extended SuperFrame |
| SM | Security Management |
| SMATV | Satellite Master Antenna TeleVision |
| SMF | System Management Function |



Copyright International Organization for Standardization
Provided by IHS under license with ISO
No reproduction or networking permitted without license from IHS Not for Resale

| | |
|---|---|
| SMPTE | Society of Motion Picture and Television Engineers |
| SNMP | Simple Network Management Protocol |
| SONET | Synchronous Optical Network |
| SPI | Synchronous Physical Interface |
| SPIFF | Still Picture Image File Format |
| SPS | Service Provider System |
| SPTS | Single Program Transport Stream (ISO/IEC 13818–1 MPEG-2 Systems) |
| SPv | Service Provider |
| SPVC | Semi-Permanent Virtual Connection |
| SRC | Service Related Control |
| SRM | Session and Resource Manager |
| SRP | Security Reference Point |
| SSAP | Session Service Access Point |
| SSCF | Service Specific Coordination Function |
| SSCOP | Service Specific Connection Oriented Protocol |
| STB | Set-Top Box |
| STP | Shielded Twisted Pair |
| STS | Satellite Transmission System |
| STU | Set-Top Unit |
| SUR | Service Usage Records |
| SUS | Service User System |
| SVC | Switched Virtual Channel, or<br>Switching Virtual Connection |
| TBD | To be defined |
| TC | Transmission Convergence |
| tcimsbf | two's complement integer, msb (sign) bit first |
| TCP | Transmission Control Protocol |
| TDM | Time Division Multiplex |
| TDMA | Time Division Multiple Access |
| TE | Terminal Equipment |
| TFTP | Trivial File Transfer Protocol |
| TIFF | Tag Image File Format |
| TMN | Telecommunication Management Network |
| TS | Transport Stream |
| TSB | Telecommunication Standardization Bureau |
| T-STD | Transport System Target Decoder |
| TTD | Transmission Technology Decoupling |
| TTP | Trail Termination Point |
| TV | Television |
| UD | User Data |
| UDCE | Usage Data Collection Element |
| UDP | User Datagram Protocol, or<br>Usage Data Protocol |
| UDTI | Usage Data Transfer Interface |
| uimsbf | unsigned integer most significant bit first |
| UMD | Usage Metering Data |
| UML | Unified Modeling Language |
| UMR | Usage metering Record |
| UNI | User-Network Interface |
| UNO | Universal Networked Object |
| UP | User Plane |
| UPI | User Premises Interface |
| URL | Uniform Resource Locator |
| US | Upstream |
| UTC | Universal Coordinated Time |
| UTP | Unshielded Twisted Pair |
| VASP | Value Added Service Provider |

 © ISO/IEC 1999 - All rights reserved

--`,,```,,,,````-`-`,,`,,`,`,,`---

Copyright International Organization for Standardization
Provided by IHS under license with ISO
No reproduction or networking permitted without license from IHS Not for Resale

| | |
|---|---|
| VC | Virtual Channel, or<br>Virtual Circuit, or<br>Virtual Connection |
| VC4 | Virtual Container 4 |
| VC44C | Virtual Container 44C |
| vcCTP | Virtual Channel Connection Termination Point |
| VCI | Virtual Channel Identifier |
| VCR | Video Cassette Recorder |
| VDSL | Very high speed Digital Subscriber Line |
| VDT | Video Dial Tone |
| VM | Virtual Machine |
| VOD | Video-On-Demand |
| VP | Virtual Path |
| VPCI | Virtual Path Connection Identifier |
| VPI | Virtual Path Identifier |
| VPN | Virtual Private Network |
| W3C | World Wide Web Consortium |
| WWW | World Wide Web |



Copyright International Organization for Standardization
Provided by IHS under license with ISO
No reproduction or networking permitted without license from IHS Not for Resale

# Annex C
(informative)
# Bibliography

The following documents are referenced in non-integral annexes of this part of ISO/IEC 16500:

[1] Study Group X, *Report on the Meeting Held in Geneva from 18 to 27 May 1992; Part II.4–Annex B to Recommendation Z.100–Glossary*, COM X-R 27-E, (Geneva: International Telecommunications Union, July 1992.)

[2] IXth Plenary Assembly, Melbourne, 14-25 November 1988, *Blue Book, Volume VII – Fascicle VII.3: Terminal equipment and protocols for telematic services. Recommendations T.0-T.63. (Rec. T62).* (Geneva: International Telecommunications Union, 1989.)

[3] IXth Plenary Assembly, Melbourne, 14-25 November 1988, *Blue Book, Volume I – Fascicle I.3: Terms and definitions. Abbreviations and acronyms. Recommendations on: means of expression (Series B), General telecommunications statistics (Series C).* (Geneva: International Telecommunications Union, 1989.)

 © ISO/IEC 1999 - All rights reserved

--`,,```,,,,````-`-`,,`,,`,`,,`---

Copyright International Organization for Standardization
Provided by IHS under license with ISO
No reproduction or networking permitted without license from IHS Not for Resale

# Annex D
(informative)
# Interface examples

## D.1 ESP-ISP Management Plane interface example

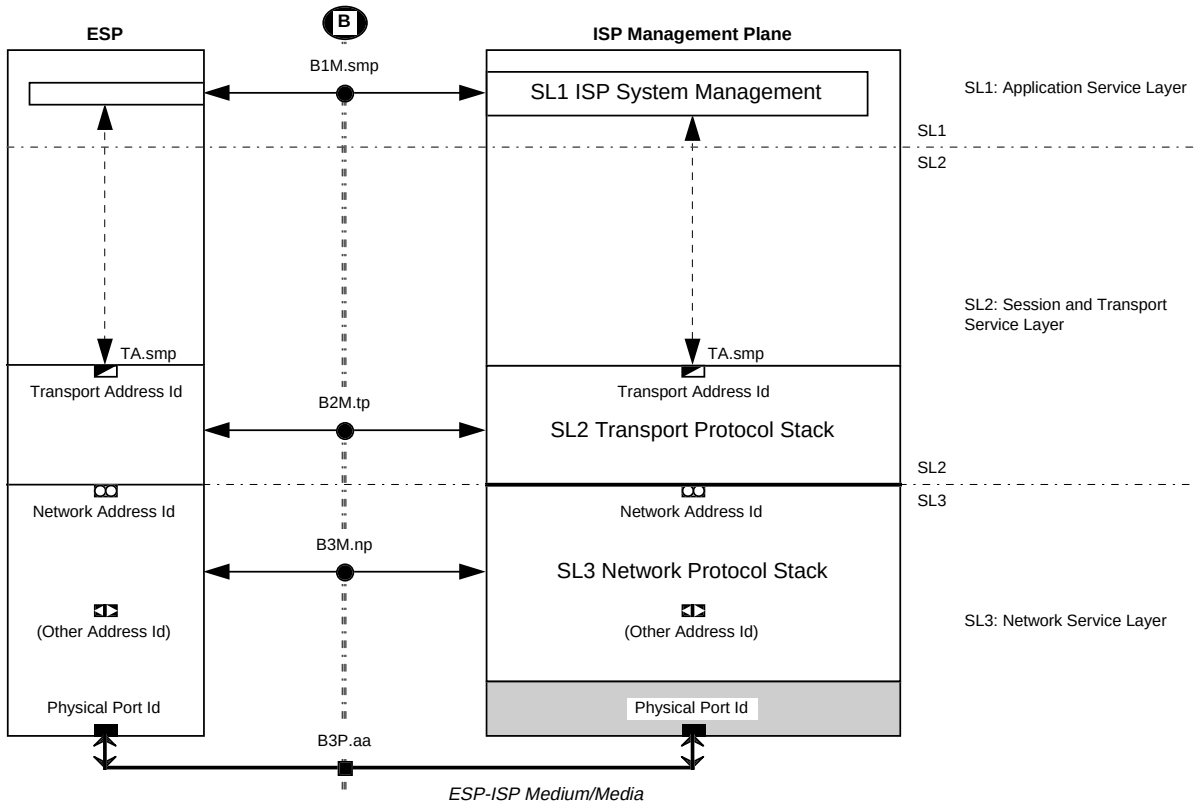


**Figure D–1. ESP-ISP Management Plane interface example**

The general models described above can be applied at various system partition levels Figure D-1is an example that illustrates Reference Point B interfaces between management-category objects in an ESP domain interacting with peers in an ISP domain.

The examples shows an SL1 ISP System Management object using the services of an SL2 Transport Protocol Stack (object) to communicate with a peer management object in the ESP domain. The SL2 Transport Protocol Stack, in turn, relies on the services of an SL3 Network Protocol Stack (object).

To define the complete service capabilities of a case similar to this example, the three logical peer-to-peer interfaces and the physical interface identified in the example would need to be specified in full detail. In addition to the peer-to-peer information flows, the example shows the need to correlate vertical information flows in each domain (by using appropriate addressing schemes) to ensure that information flows are proper.

Figure D-1 contains the following elements (listed alphabetically):

**B:** a reference point between the ESP and ISP domains that, in this example, represents a set of logical and physical interfaces used by Management Plane objects to exchange information.

**B1M.smp:** a logical peer-to-peer interface through which information flows between the ISP System Management object and its ESP peer using an arbitrary *System Management Protocol*.

**B2M.tp:** a logical peer-to-peer interface through which information flows between the SL2 Transport Protocol Stack object and its ESP peer using an arbitrary *Transport Protocol*.



Copyright International Organization for Standardization
Provided by IHS under license with ISO
No reproduction or networking permitted without license from IHS Not for Resale

**B3M.np:** a logical peer-to-peer interface through which information flows between the SL3 Network Protocol Stack object and its ESP peer using an arbitrary *Network Protocol*.

**B3P.aa:** an arbitrary SL3 physical interface, consisting of one or more channels, through which all signal flows between the ESP and ISP occur. Channels map to Port Address Ids.

**ESP:** in this example, a collection of Management Plane objects in the End Service Provider domain.

**ISP Management Plane:** a collection of objects in the Intermediate Service Provider domain that contains layer and system management objects. Management message exchanges may take place during sessions established exclusively for management-information flows (as in this example), or such message exchanges may be part of a session established for another purpose. In either case, the TA.*smp* Transport Address Id serves to identify information flows between associated peers.

**Network Address Id:** an address identifier for routing messages to a particular SL2 Transport Protocol Stack.

**Other Address Id:** to provide connectivity, SL3 Network Service Layer objects may use other address identifiers.

**Physical Port Id:** identifies physical ports through which signals flow between the ESP and ISP domains. The signals represent information flows between logical peers in the two domains.

**SL1 Application Service Layer:** contains objects that communicate with peers in other domains using SL2 services.

**SL1 ISP System Management:** an SL1 object that interacts with a peer (unlabeled) object in the ESP, using some arbitrary *System Management Protocol*, through interface B1M.smp. SL1 peers do not communicate directly. Each uses the services of a local object, the SL2 Transport Protocol Stack, to transfer information.

**SL2 Session and Transport Service Layer:** contains objects that provide SL1 clients transparent information transfer services. SL2 objects use SL3 services to communicate with peers in other domains.

**SL2 Transport Protocol Stack:** provides information flow pipes through which SL1 client information flows. The transport object uses an arbitrary *Transport Protocol* to communicate with its peer via interface B2M.tp, and relies on the services of the SL3 Network Protocol Stack object for connectivity to its peer via a Service Access Point identified by its Network Address Id.

**SL3 Network Protocol Stack:** provides logical and physical information transfer services for its SL2 clients. The network object uses an arbitrary *Network Protocol* to communicate with its peer via interface B3M.np. (The possible need for other SL3 addressing information is indicated by the Other Address Id reference.)

**SL3 Network Service Layer:** contains objects that provide logical and physical connection services that allow SL2 client objects to communicate.

**TA.smp:** an instance of Transport Address Id that identifies information flows between the ISP System Management object and its peer in the ESP domain; an attribute of the B1M.scp interface.

**Transport Address Id:** is an address identifier for message flows between the ISP System Management object and its peer in the ESP domain.

 © ISO/IEC 1999 - All rights reserved

Copyright International Organization for Standardization
Provided by IHS under license with ISO
No reproduction or networking permitted without license from IHS Not for Resale

## D.2 ESP-ISP Control Plane interface example

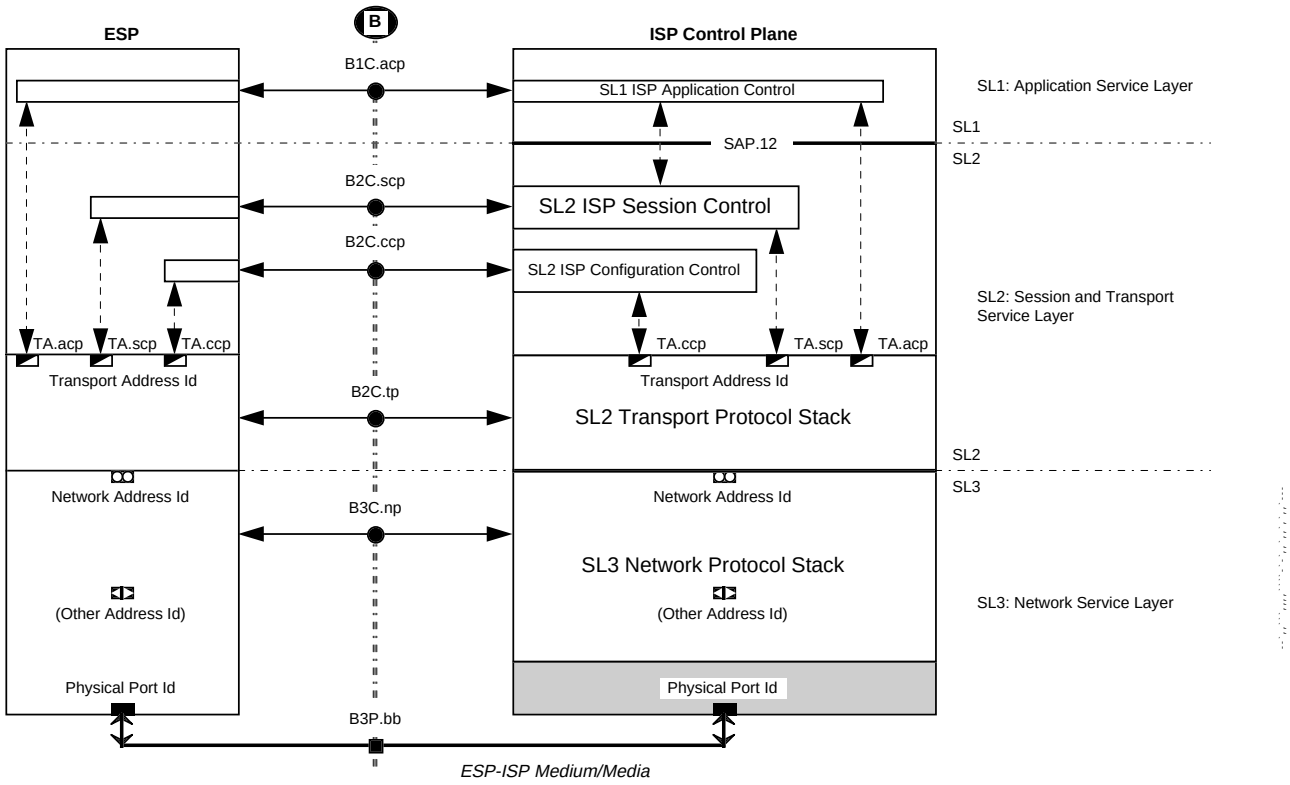


**Figure D–2. ESP-ISP Control Plane interface example**

The ESP-ISP Control Plane interface example shown in Figure D-2 illustrates multiple SL1 and SL2 objects using the services of one SL2 Transport Protocol Stack that, in turn, uses the services of one SL3 Network Protocol Stack (object). The SL2 Transport Protocol Stack uses different Transport Address Id instances to ensure that information flows are directed to the proper associated objects.

Figure D-2 contains the following elements (listed alphabetically):

**B:** a reference point between the ESP and ISP domains that, in this example, represents a set of logical and physical interfaces used by Control Plane objects to exchange information.

**B1C.acp:** a logical peer-to-peer interface through which information flows between the SL1 ISP Application Control object and its ESP peer using an arbitrary *Application Control Protocol*.

**B2C.ccp:** a logical peer-to-peer interface through which information flows between the SL2 ISP Configuration Control object and its ESP peer using an arbitrary *Configuration Control Protocol.*

**B2C.scp:** a logical peer-to-peer interface through which information flows between the SL2 ISP Session Control object in the ISP and its ESP peer using an arbitrary *Session Control Protocol*.

**B2C.tp:** a logical peer-to-peer interface through which information flows between the SL2 Transport Protocol Stack object in the ISP and its ESP peer using an arbitrary *Transport Protocol*.

**B3C.np:** a logical peer-to-peer interface through which information flows between the SL3 Network Protocol Stack object in the ISP and its ESP peer using an arbitrary *Network Protocol.*

**B3P.bb:** an arbitrary SL3 physical interface, consisting of one or more channels, through which all signal flows between the ESP and ISP occur. Channels map to Port Address Ids.

**ESP:** in this example, a collection of Control Plane objects in the End Service Provider domain.



Copyright International Organization for Standardization
Provided by IHS under license with ISO
No reproduction or networking permitted without license from IHS Not for Resale

**ISP Control Plane:** a collection of objects in the Intermediate Service Provider domain that contains control objects. Control message exchanges may take place during sessions established exclusively for control-information flows (as in this example), or such message exchanges may be part of a session established for another purpose. In all cases, the *TA.*…Transport Address Ids serves to identify information flows between associated peers.

**Network Address Id:** an address identifier for routing messages to a particular SL2 Transport Protocol Stack.

**Other Address Id:** to provide connectivity, SL3 Network Service Layer objects may use other address identifiers.

**Physical Port Id:** identifies physical ports through which signals flow between the ESP and ISP domains. The signals represent information flows between logical peers in the two domains.

**SAP.12:** a Service Access Point through which the SL1 Application Control object can request and receive services from different SL2 objects. The example illustrates that the SL1 Application Control object has two local relationships: one with the SL2 Session Control object (to establish a session or to join an existing session, for example), and with the SL2 Transport Protocol Stack object for information flows once a communication pipe is established as part of a session.

**SL1 Application Service Layer:** contains objects that communicate with peers in other domains using SL2 services.

**SL1 ISP Application Control:** an SL1 object that interacts with a peer (unlabeled) object in the ESP, using some arbitrary *Application Control Protocol,* through interface B1C.acp. SL1 peers do not communicate directly. Each uses the services of a local object, the SL2 Transport Protocol Stack, to transfer information between them via Service Access Point *SAP.12.* The SL2 Transport Protocol Stack uses *TA.acp* Transport Address Id to ensure information flows are directed properly to associated peers.

**SL2 ISP Configuration Control:** an SL2 object that interacts (to control dynamically the utilization of ISP resources at a given time or load condition, for example) with a peer object in the ESP. The peers communicate through interface B2C.ccp using some arbitrary *Configuration Control Protocol* The SL2 Configuration Control peers in the example do not communicate directly. Each uses the services of a local object, the SL2 Transport Protocol Stack, to transfer information between them. The SL2 Transport Protocol Stack uses *TA.ccp* Transport Address Id to ensure information flows are directed properly to associated peers.

**SL2 ISP Session Control:** an SL2 object that interacts with a peer (unlabeled) object in the ESP, using some arbitrary *Session Control Protocol,* through interface B2C.scp. SL2 Session Control peers do not communicate directly. Each uses the services of a local object, the SL2 Transport Protocol Stack, to transfer information between them. The SL2 Transport Protocol Stack uses *TA.scp* Transport Address Id to ensure information flows are directed properly to associated peers.

**SL2 Session and Transport Service Layer:** contains objects that communicate with peers in other domains using SL2 services and objects that provide SL1 clients transparent information transfer services. SL2 objects use SL3 services to communicate with peers in other domains.

**SL2 Transport Protocol Stack:** provides information flow pipes through which SL1 client information flows. The transport object uses an arbitrary *Transport Protocol* to communicate with its peer via interface B2C.tp, and relies on the services of the SL3 Network Protocol Stack object for connectivity to its peer via a Service Access Point identified by its Network Address Id.

**SL3 Network Protocol Stack:** provides logical and physical information transfer services for its SL2 clients. The network object uses an arbitrary *Network Protocol* to communicate with its peer via interface B3C.np. (The possible need for other SL3 addressing information is indicated by the Other Address Id reference.)

**SL3 Network Service Layer:** contains objects that provide logical and physical connection services that allow SL2 client objects to communicate.

**TA.acp:** an instance of Transport Address Id that identifies information flows between the SL1 ISP Application Control object and its peer in the ESP domain; an attribute of the B1C.acp interface definition.

**TA.ccp:** an instance of Transport Address Id that identifies information flows between the SL2 ISP Configuration Control object and its peer in the ESP domain; an attribute of the B2C.ccp interface definition.

**TA.scp:** an instance of Transport Address Id that identifies information flows between the SL2 ISP Session Control object and its peer in the ESP domain; an attribute of the B2C.scp interface definition.

 © ISO/IEC 1999 - All rights reserved

Copyright International Organization for Standardization
Provided by IHS under license with ISO
No reproduction or networking permitted without license from IHS Not for Resale

**Transport Address Id:** is an address identifier for message flows between the ISP System Management object and its peer in the ESP domain.

## D.3 A User Plane interface example

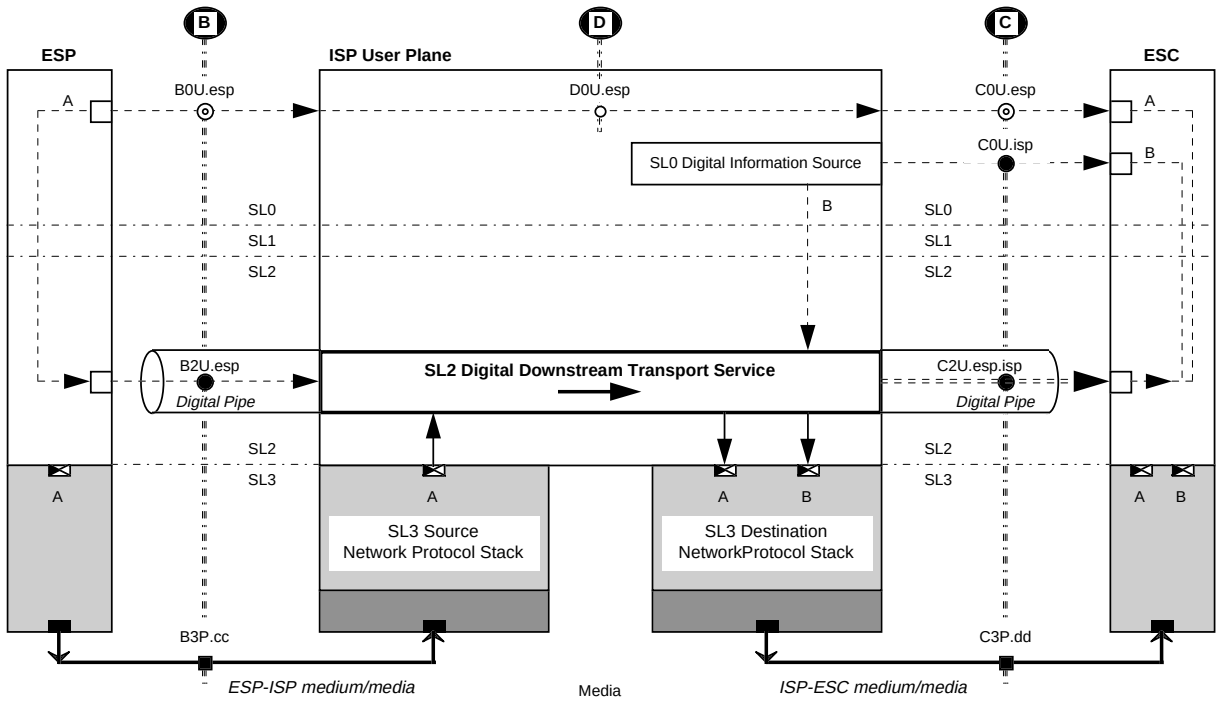


**Figure D–3. User Plane interface example**

Figure D-3 shows SL0, SL1, and SL2 objects in the ESP and the ESC communicating through a digital pipe created by the ISP. The example illustrates transparent information flows from an ESP to an ESC, and end-to-end information flows from source objects in the ISP to sink objects in the ESC. To keep the example simple, only a unidirectional flow is illustrated.

The digital pipe represents a set of resources organized and managed by ESP, ISP, and ESC Control Plane objects and Management Plane objects. Five independent information flows are illustrated through one digital pipe: three from the ESP to the ESC, and two from the ISP to the ESC. Each information flow is carried from its source object to its destination object in a subchannel.

Shaded SL3 objects are shown in Figure D-3 only to indicate that there is a physical path for signals to follow from one domain to another. The example is intended to illustrate logical information flows through the digital pipe and not to discuss details of how the information is transported between and inside the SL3 blocks.

Figure D-3 contains the following elements (listed alphabetically):

**B:** a reference point between the ESP and ISP domains that represents a set of logical interfaces through which User Plane objects exchange information.

**B0U.esp:** an image of the D0U.esp (see below) interface between the ESP and ISP.

**B2U.esp:** a logical peer-to-peer interface through which content-information flows from an SL2 ESP object to a peer SL2 ISP object. The interface is the source-end of the digital pipe shown in the example. Information flows entering the pipe from SL0, SL1, and SL2 objects in the ESP map to this interface.

**B3P.cc:** an arbitrary SL3 physical interface, consisting of one or more channels through which all signal flows between the ESP and ISP occur. Channels map to Port Address Ids (not shown).

**C:** a reference point between the ISP and ESC domains that represents a set of logical interfaces through which User Plane objects exchange information.



Copyright International Organization for Standardization
Provided by IHS under license with ISO
No reproduction or networking permitted without license from IHS Not for Resale

**C0U.esp:** an image of the D0U.esp (see below) interface between the ISP and ESC.

**C0U.isp:** a logical peer-to-peer interface through which content-information flows from an SL0 ISP object to a peer SL0 ESC object, e.g., a menu or a barker information channel showing movie clips.

**C2U.esp.isp:** a logical peer-to-peer interface through which content-information flows from SL2 ESP and SL2 ISP objects to a peer SL2 ESC object. The interface is the destination-end of the digital pipe in the example. Information flows exiting the pipe map to ESC SL0, SL1, and SL2 clients. Each flow must be addressed and identified appropriately to ensure correct delivery to destination objects, e.g., flows A and B shown in the example.

**C3P.dd:** an arbitrary SL3 physical interface, consisting of one or more channels, through which all signal flows between the ISP and ESC occur. Channels map to Port Address Ids (not shown).

**D:** a reference point between the ESP and ESC domains that represents a set of logical interfaces through which User Plane objects exchange information. Note that the information flows through Reference Point D are transparent to the ISP at the semantic and syntactic levels.

**D0U.esp:** a logical peer-to-peer interface through which content-information flows transparently through the ISP domain from an SL0 ESP object to an SL0 ESC object, e.g., a movie, an audio program, or data from a database.

> NOTE: Since the D0U.esp interface is transparent to the ISP at the semantic and syntactic levels, only the symbolic level is significant to the ISP. Symbol flows through Reference Point D interfaces may be the same as respective Reference Point B and C interface symbol flows, or they may be different at some, or all places.

**ESC:** in this example, a collection of User Plane objects in the End Service Consumer domain.

**ESP:** in this example, a collection of User Plane objects in the End Service Provider domain.

**SL0 Digital Information Source:** an SL0 content-information source object, e.g., a database that generates menu information, an emergency broadcast message, or a movie clip.

**SL2 Digital Downstream Transport Service:** an SL2 object responsible for delivery of some arbitrary type of information streams from ESP and ISP sources to the ESC.

## D.4 Interface specification template example

Figure D-4 and companion text illustrates that a given interface definition may represent a set of relationships between different objects that belong to the same service layer and plane. The example refers to the set of SL2 interfaces in Figure D-4 Each interface in the set is identified uniquely and may be specified independently.

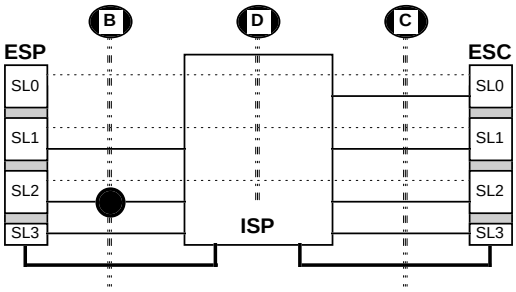


**Figure D–4. Interface Location**

In this example, ISP SL2 objects provide services to ESP SL2 clients. ESP objects are service users and ISP objects are service providers. The services provided through B2C are: 1) SL2-ISP-Configuration-Control, 2) SL2-ISP-Session-Control Service, and 3) SL2-ISP-Transport Service. B2C identifies a set of three separate, uniquely identified interfaces.

 © ISO/IEC 1999 - All rights reserved

Copyright International Organization for Standardization
Provided by IHS under license with ISO
No reproduction or networking permitted without license from IHS
Not for Resale

Table D-1. ESP user to ISP provider logical interface B2: Control Plane

| *Interface Identifier* | *Peer Objects* | | *Description* |
|---|---|---|---|
| | *ESP* | *ISP* | |
| B2C.ccp | SL2-ISP-Configuration-Control Service User | SL2-ISP-Configuration-Control Service Provider | Information maps to Transport Address Id. |
| B2C.scp | SL2-ISP-Session-Control Service User | SL2-ISP-Session-Control Service Provider | Information maps to Transport Address Id. |
| B2C.tp | SL2-ISP-Transport Service User | SL2-ISP-Transport Service Provider | Communication uses an arbitrary *.tp Transport Protocol* to provide reliable transport for session message exchanges.<br>Information maps to SL3 network service at a Network Address Id. |



Copyright International Organization for Standardization
Provided by IHS under license with ISO
No reproduction or networking permitted without license from IHS Not for Resale

# Annex E
(informative)
# ISO/IEC 16500 normative and informative references

Normative and informative references in ISO/IEC 16500 are included below and arranged in clauses in accordance with the *Rules for Presentation of ITU-T | ISO/IEC common text*. The first two clauses reference ITU and ISO/IEC standards with common or twin text. These are grouped separately and sorted by the ITU designation. For ease of reference CCITT recommendations are listed throughout under ITU-T with entries in the appropriate sequence. The third clause is organized by the source organization, and then by the general alpha-numeric designation. The remaining clause is organized alphabetically and provides other additional informative references.

References cited in Part n of ISO/IEC 16500 have the designation {#Pn} (or {<Pn} if informative), appended in the lists in this Annex. References to non transposed parts (viz. Parts 3, 4, 5, and 13) of the DAVIC 1.3.1a specification where applicable have the designation {<DPn} appended.

For dated references, subsequent amendments to, or revisions of, any of these publications do not apply. However, parties to agreements based on ISO/IEC 16500 are encouraged to investigate the possibility of applying the most recent editions of the standards indicated below. For undated references, the latest edition of the normative document referred to applies. Members of ISO and IEC maintain registers of currently valid International Standards. The Telecommunication Standardization Bureau (TSB) maintains a list of currently valid ITU-T Recommendations.

## E.1 Identical Recommendations | International Standards

1. ITU-T Recommendation H.222.0 (1995) | ISO/IEC 13818–1: 1996, *Information technology—Generic coding of moving pictures and associated audio information: Systems.* (Note: known as MPEG-2) {<DP4} {#P5} {#P4} {#P6}{#P7}{#P2} {#P3}
   2. ISO/IEC 13818-1/Amendment 1: 1997, *Registration procedure for "copyright identifier"*. {#P5}{#P6}

      ISO/IEC 13818-1/Amendment 2: 1997, *Registration procedure for "format identifier"*. {#P5}

      ISO/IEC 13818-1/Amendment 3: 1998, *Private data identifier*. {#P5}
3. ITU-T Recommendation H.262 | ISO/IEC 13818–2:1996, *Information technology — Generic coding of moving pictures and associated audio information: Video.* (Note: known as MPEG-2) {#P5} {#P6} {#P2}

      ISO/IEC 13818–2 /Amendment 1: *Registration procedure for "copyright identifier"*. {#P6}
4. ITU-T Recommendation X.215 (1995) | ISO/IEC 8326: 1996, *Information technology — Open Systems Interconnection — Session service definition.* {#P5}
5. ITU-T Recommendation X.216 (1994) | ISO/IEC 8822: 1994, *Information technology — Open Systems Interconnection — Presentation service definition.* {#P5}
6. ITU-T Recommendation X.217 (1995) | ISO/IEC 8649: 1996, *Information technolog y— Open Systems Interconnection — Service definition for the Association Control Service Element.* {#P5}
7. ITU-T Recommendation X.225 (1994) | ISO/IEC 8327–1: 1994, *Information technolog y— Open Systems Interconnection — Connection-oriented session protocol: Protocol specification.* {#P5} {#P9}
8. ITU-T Recommendation X.226 (1994) | ISO/IEC 8823–1: 1994, *Information technology—Open Systems Interconnection — Connection-oriented protocol: Protocol specification.*{#P5}{#P9}
9. ITU-T Recommendation X.233 (1993) | ISO/IEC 8473–1: 1994, *Information technology — Protocol for providing the connectionless-mode network service: Protocol specification*. {#P5}

## E.2 Similar Recommendations | International Standards

The following Recommendations or International standards have equivalent technical content:

 © ISO/IEC 1999 - All rights reserved

Copyright International Organization for Standardization
Provided by IHS under license with ISO
No reproduction or networking permitted without license from IHS Not for Resale

1. ITU-T (CCITT) Recommendation X.208 (1988), *Specification of Abstract Syntax Notation One (ASN.1)* | ISO/IEC 8824-1: 1990, *Information technology — Open Systems Interconnection — Specification of Abstract Syntax Notation One (ASN.1).* {#P5} {#P7} {#P3}
2. ITU-T (CCITT) Recommendation X.209 (1988) *Specification of Basic Encoding rules for abstract syntax notation one (ASN.1)* | ISO/IEC 8825-1: 1995, *Information technology — Open Systems Interconnection — ASN.1encoding rules – Specification of Basic Encoding Rules (BER), Canonical Encoding Rules (CER) and Distinguished Encoding Rules (DER).* {#P5} {#P7} {#P3}
3. ITU-T Recommendation X.218 (1995), *Reliable transfer: model and service definition* | ISO/IEC 9066–1: 1989, *Information processing systems — Text communication — Reliable transfer — Model and service definition.* {#P5} {#P3}
4. ITU-T (CCITT) Recommendation X.219 (1988) *Remote operations: Model, notation and service definition* | ISO/IEC 9072–1: 1989, *Information processing systems — Text communication — Remote operations — Model, notation and service definition.* {#P5} {#P3}
5. ITU-T Recommendation X.224 (1993), *Protocol for providing the OSI connection-mode transport service* | ISO/IEC 8073: 1992, *Information technology — Telecommunications and information exchange between systems — Open Systems Interconnection — Protocol for providing the connection-mode transport service.* {#P5}
6. ITU-T (CCITT) Recommendation X.229 (1988), *Remote operations: Protocol specification* | ISO/IEC 9072–2: 1989, *Information processing systems—Text communication—Remote Operations— Protocol specification.* {#P5}
7. ITU-T Recommendation X.290 (1995), *OSI conformance testing methodology and framework for protocol Recs for ITU-T applications—General concepts* | ISO/IEC 9646–1: 1995, *Information technology—Open Systems Interconnection—Conformance testing methodology and framework—General concepts.* {<DP13}
8. ITU-T Recommendation X.296 (1995), *OSI conformance testing methodology and framework for protocol Recs for ITU-T applications — Implementation Conformance Statements* | ISO/IEC 9646–7: 1995, *Information technology — Open Systems Interconnection — Conformance testing methodology and framework — Implementation Conformance Statements* {<DP13}
9. ITU-T Recommendation X.721 | ISO/IEC 10165-2: 1992, *Information technology - Open Systems Interconnection - Structure of management information – Definition of management information.* {#P8} {#P5}
10. ITU–T Recommendation X.722 (01/1992) | ISO/IEC 10165-4:1992, *Information technology — Open Systems Interconnection — Structure of management information — Guidelines for the definition of managed objects.* {#P8}

## E.3 Additional References

### 1394 Trade Association

1. *AV/DICS Specification for AV/C Digital Interface Command Set, September 13, 1996.* {#P4} {#P3} Available at http://firewire.org/abouttech/specifications/1394_AVC.pdf

### ADSL (Asymmetric Digital Subscriber Line) Forum

1. ADSL Forum TR-002: *ATM over ADSL Recommendations*, March 1997{#P4} available at http://www.adsl.com/adsl_atm.html

### ANSI (American National Standards Institute)

1. ANSI EIA/TIA-232-E-91, *Interface between Data Terminal Equipment and Data Circuit-Terminating Equipment Employing Serial Binary Data Interchange, July 1991.* {#P5}
2. ANSI SMPTE 274M-1995, *Television - 1920 x 1080 Scanning and Interface.* {#P6}
3. ANSI SMPTE 296M-1997, *Television - 1280 x 720 Scanning, Analog and Digital Representation and Analog Interface.* {#P6}
4. ANSI T1.105, *SONET Basic Description including Multiplex Structure, Rate and Formats.* {#P4}
5. ANSI T1.105.01, *SONET Automatic Protection Switching.* {#P4}



--`,,```,,,,````-`-`,,`,,`,`,,`---
Copyright International Organization for Standardization
Provided by IHS under license with ISO
No reproduction or networking permitted without license from IHS Not for Resale

6. ANSI T1.105.02, *SONET Payload Mappings.* {#P4}
7. ANSI T1.105.03, *SONET Jitter and Network Interfaces.*{#P4}
8. ANSI T1.105.04, *SONET Data Communication Channel Protocols and Architectures.* {#P4}
9. ANSI T1.105.05, *SONET Tandem Connection Maintenance.* {#P4}
10. ANSI T1.105.06, *SONET Physical Layer Specification.* {#P4}
11. ANSI T1.105.07, *SONET Sub STS-1 Interface Rates and Formats Specifications.* {#P4}
12. ANSI T1.105.09, *SONET Timing and Synchronization.* {#P4}
13. ANSI T1.119-02, *SONET: Operations, Administration, Maintenance, and Provisioning (OAM&P) Communications - Performance Management Fragment, 1997.* {<P8}
14. ANSI T1.240, *Telecommunications - Operations, Administration, Maintenance and Provisioning (OAM&P) - Generic Network Information Model for Interfaces between Operations Systems and Network Elements, 1997.* {#P8}
15. ANSI T1.245-1997, *Telecommunications - Directory Service for Telecommunications Management Network (TMN) and Synchronous Optical Network (SONET)* (revision of ANSI T1.245-1995). {#P4}
16. ANSI T1.247: *Operations, Administration, Maintenance, and Provisioning (OAM&P) Communications - Performance Management Functional Area Services and Information Model for Interfaces Between Operations Systems and Network Elements, 1997.* {#P8}
17. ANSI T1.413 *Network and Customer Installation Interface—Asymmetric Digital Subscriber Line (ADSL)—Metallic Interface, March 1995.* {<DP4} {#P4} {#P2} {<DP13}

### Apple Computer Inc.

1. AIFF-C *Audio Interchange File Format, version C, A revision allowing for Compression.* {#P6} {#P3} (Note: Required specification is provided in ISO/IEC 16500-6 Annex B. AIFF is available at http://www.apple.com/quicktime/developers/ffda.html.)
2. *Bento Specification, Revision 1.0d5, July 15, 1993.* {#P6}
available at http://www.acl.lanl.gov/sunrise/DistComp/Bento/BentoSpec.pdf

### ATM (Asynchronous Transfer Mode) Forum

1. af-nm-0027.000 - *CMIP Specification for the M4 Interface, September, 1995.* {#P8}
available at ftp://ftp.atmforum.com/pub/approved-specs/ af-nm-0027.000.pdf
2. af-nm-0071.000 - *Network Management: AAL Management for the M4 "NE View" Interface, January, 1997.* {#P8}
available at ftp://ftp.atmforum.com/pub/approved-specs/ af-nm-0071.000.pdf
3. af-nm-0072.000 - *Circuit Emulation Service Interworking Requirements, Logical and CMIP MIB, January, 1997.* {#P8} available at ftp://ftp.atmforum.com/pub/approved-specs/af-nm-0072.000.pdf
4. af-phy-0040.000 - *Physical Interface Specification for 25.6 Mb/s over Twisted Pair Cable, November 1995 (ATMF 25.6).* {#P4}
available at ftp://ftp.atmforum.com/pub/approved-specs/ af-phy-0040.000.pdf
5. af-phy-0017.000 - *UTOPIA: an ATM-PHY Interface Specification, Level 1, Version 2.01, March 21, 1994.* {#P4} {#P3}
available at ftp://ftp.atmforum.com/pub/approved-specs/ af-phy-0017.000.pdf
6. af-saa-0049.001 - *Audiovisual Multimedia Services: Video on Demand Specification 1.1, March 1997.* {#P5}
available at ftp://ftp.atmforum.com/pub/approved-specs/ af-saa-0049.001.pdf
7. af-test-0022.000 - *Introduction to ATM Forum Test Specifications, December 1994.* {<DP13}
available at ftp://ftp.atmforum.com/pub/approved-specs/ af-test-0022.000.pdf
8. af-test-0030.000 - *Conformance Abstract Test Suite for the UNI 3.0 ATM Layer of Intermediate Systems, September 1995.* {<DP13}
9. af-test-0035.000 - *UNI 3.0 ATM Layer Interoperability Test Suite for Intermediate Systems, 1995.* {<DP13}
available at ftp://ftp.atmforum.com/pub/approved-specs/ af-test-0035.000.pdf
10. af-test-0041.000 - *ATM-Forum Conformance Abstract Test Suite for the UNI 3.0 ATM Layer of End Systems, Jan 1996.* {<DP13}

 © ISO/IEC 1999 - All rights reserved

Copyright International Organization for Standardization
Provided by IHS under license with ISO
No reproduction or networking permitted without license from IHS Not for Resale

11. af-test-0045.000 - *ATM-Forum Conformance Abstract Test Suite for the UNI 3.1 ATM Layer of Intermediate Systems, Jan 1996.* {<DP13}
12. af-test-0052.000 - *AAL Type 5 Common Part Abstract Conformance Test, March 1996.* {<DP13}
13. af-test-0060.000 - *ATM-Forum Conformance Abstract Test Suite for the UNI 3.1 ATM Layer of End Systems, June 1996.* {<DP13}

### ATSC (Advanced Television Systems Committee)

1 ATSC A/52: *Digital Audio Compression Standard (AC-3).* {#P6} {#P3}
available at ftp://ftp.atsc.org/pub/Standards/A52
2 ATSC A/53: *Digital Television standard for HDTV Transmission.* {#P6}
available at ftp://ftp.atsc.org/pub/Standards/A53
3 ATSC A/65: *Program and system Information for protocol for terrestrial broadcast and cable.* {<P5}
available at ftp://ftp.atsc.org/pub/Standards/A65

### Bellcore (Bell Communications Research)

1. Bellcore Document GR-253-CORE: *Synchronous Optical Network (SONET) Transport; Systems: Common Generic Criteria, Issue 2, December 1995.* {#P4}
2. Bellcore Document GR-836-IMD, OTGR Section 15.2 *Generic Operations Interfaces Using OSI Tools - Information Model Details: Transport Configuration and Surveillance for Network Elements, Issue 2, 1996.* {#P8}
3. Bellcore Document GR-1114, *Generic Operations Interface Requirements : ATM Information Model, Issue 3, 1996.* {#P8}

### CENELEC (Comité Européen de Normalisation Electrotechnique)

1. CENELEC EN 50083-9 (March, 1997) *Cabled distribution systems for television, sound and interactive multimedia signals, Part 9: Interfaces for CATV/SMATV headends and similar professional equipment for DVB/MPEG-2 transport streams.* {#P4}
2. CENELEC EN 50221, *Common Interface for Conditional Access and other Digital Video Decoder Applications*. {#P7}{#P3}
3. CENELEC R206-001:1997, *Guidelines for the Implementation and Use of the Common Interface for DVB Decoder Applications.* {#P7}

### DAVIC (Digital Audio-Visual Council)

1. DAVIC 1.3.1a Specification, 1999
Part 3: Service provider system architecture {<Pn}
Part 4: Delivery system architecture and interfaces {<Pn}
Part 5: Service consumer system architecture {<Pn}
Part 13: Conformance and interoperability {<Pn}

Available from http://www.davic.org

### DIN (Deutsches Institut für Normung e.V.)

1. DIN 41612-5 *Two-part connectors for printed boards; grid 2,54 mm; ratings, requirements, tests, dated October 1987.*{#P4}

### DVB (Digital Video Broadcasting)

1. DVB A007 *see* ETSI ETR 289
2. DVB Document A010 *see* CENELEC EN 50083-9
3. DVB Blue Book A017 *see* CENELEC EN 50221

### ECITC (European Committee for IT Testing and Certification)

1. *The ECITC Guide to IT&T Testing and Certification,* First edition, November 1993 {<DP13}



Copyright International Organization for Standardization
Provided by IHS under license with ISO
No reproduction or networking permitted without license from IHS Not for Resale

### EIA/TIA (Electronic Industries Association & Telecommunications Industry Association)


1. EIA/TIA-232-E-91 *see* ANSI EIA/TIA-232-E-91
2. RS-232-C *see* ANSI EIA/TIA-232-E-91


### ETSI (European Telecommunications Standards Institute)


1. DE/SPS-03047: *V interfaces at the digital Service Node (SN), interfaces at the VB5.2 reference point for the support of broadband or combined narrowband and broadband Access Networks.* {<DP4}
2. prEN 301-005-1 (DE/SPS-03046-1): *V interfaces at the digital Service Node (SN), Interfaces at the VB5.1 reference point for the support of broadband or combined narrowband and broadband Access Networks (ANs): Part 1: Interface Specification.* {<DP4}
3. prEN 726-3, *Terminal equipment (TE); Requirements for IC cards and terminals for telecommunication use; Part 3 - Application independent card requirements, Version 14, 21 September 1993.* {#P7}
4. ETR 162 (October 1995): *Digital broadcasting systems for television, sound and data services: Allocation of Service Information (SI) codes for Digital Broadcasting (DVB) systems.* {#P6} {#P7} {#P3}
5. ETR 211: *Digital broadcasting systems for television, sound, and data services; Guidelines for the usage of Service Information (SI) in Digital Video Broadcasting (DVB) systems.* {#P6} {#P3}
6. ETR 257: *Signaling Protocols and Switching V interfaces at the digital Service Node (SN), Identification of the applicability of existing protocol specifications for a VB5 interface in an access arrangement with Access Networks, version 1.1, 22–03–95 (DTR/SPS-03040).* {<DP4}
7. ETR 289 (October 1996): *Support for use of Scrambling and Conditional Access (CA) within Digital Broadcasting Systems.* {#P7} {#P3}
8. ETR 328 (November 1996): *Asymmetric Digital Subscriber Line (ADSL); requirements and performance.* {#P4} {<DP13}
9. ETR 332 (November 1996): *Security requirements capture.* {#P7}
10. ETS 300 421 (December 1994): *Digital broadcasting systems for television, sound and data services; Framing structure, channel coding and modulation for 11/12 GHz satellite services.* {#P4} {#P2} {<DP13} {#P3}
11. ETS 300 429 (December 1994): *Digital broadcasting systems for television, sound and data services; Framing structure, channel coding and modulation for cable systems.* {<DP13}
12. ETS 300 468 (January 1997): *Specification for Service Information (SI) in DVB Systems.* {#P5} {#P6} {#P7} {#P3}
    - Informative Annex C: *Conversion Between Time and Date Conventions.* {#P5}
13. ETS 300 472 (October 1996), *Digital broadcasting systems for television, sound, and data services; Specification for conveying ITU-R System B Teletext in Digital Video Broadcasting (DVB) bitstreams*. {#P6} {#P3}
14. ETS 300 608 (August 1997): *Digital cellular telecommunication system (Phase 2); Specification of the Subscriber Identity Module - Mobile Equipment (SIM-ME) Interface (GSM11.11).* {#P7}
15. I-ETS 300 653, *Generic managed object class library for the network level view (May, 1996).* {<P8}
16. ETS 300 743, *Digital Video Broadcasting (DVB), DVB subtitling.* {#P5} {#P6} {#P3}
17. ETS 300 777-2, *Use of Digital Storage Media Command and Control (DSM-CC) for basic multimedia applications.* {#P6} {#P3}
18. ETS DE/TE-01057-2, *End-to-end protocols for multimedia information retrieval services: use of DSM-CC for basic multimedia applications.* {<DP13}
19. ETSI DI/MTA-01074, *Multimedia Terminals and Applications: Application Programming Interface (API) for DAVIC Service Information (SI).* {#P6}


### IEC (International Electrotechnical Commission)


1. IEC 60801–4:1988 *Electromagnetic compatibility for industrial process measurement and control equipment. Part 4: Electrical fast transient/burst requirements.* {#P4}
2. IEC 60958 (1989-02) *Digital audio interface, with Amendment No. 1 (1993-01) and Amendment No. 2 (1995-11).* {<P6}


 © ISO/IEC 1999 - All rights reserved

Copyright International Organization for Standardization
Provided by IHS under license with ISO
No reproduction or networking permitted without license from IHS Not for Resale

3. IEC 61883-1:1998, *Consumer audio/video equipment – Digital interface – Part 1: General.* {#P5} {#P4} {#P3}
4. IEC 61883-4:1998, *Consumer audio/video equipment – Digital interface – Part 4: MPEG-2 TS data transmission.* {#P5} {#P4} {#P3}
5. IEC CDV 61937 *Interface for non-linear PCM encoded audio bitstreams applying IEC 60958*. {<P6}

**IEEE (Institute of Electrical and Electronics Engineers)**

1. IEEE 802.2 *see* ISO/IEC 8802–2
2. IEEE 802.3 *see* ISO/IEC 8802–3
3. IEEE 1284-1994 *Standard Signaling Method for a Bidirectional Parallel Peripheral Interface for Personal Computers* (ISBN 1-55937-427-6) [SH17335-NXG]. {<P4}
4. IEEE 1394-1995 *Standard for a High Performance Serial Bus, August 1996*.{#P5} {#P4} {#P3}

**Internet Society** (Note: RFCs are available at ftp://ds.internic.net/rfc/)

1. RFC 768, J. Postel, *User Datagram Protocol* (UDP), 08/28/1980 (STD-6) {#P5} {#P2} {#P3}
2. RFC 791, J. Postel, *Internet Protocol (IP Addressing)*, 09/01/1981 (STD-5) {#P5} {#P9} {#P2} {#P3}
3. RFC 793, J. Postel, *Transmission Control Protocol* (TCP), 09/01/1981 (STD-7) {#P5} {#P9} {#P2}{#P3}
4. RFC 826, D. Plummer, *Ethernet Address Resolution Protocol*: or, *Converting network protocol addresses to 48.bit Ethernet address for transmission on Ethernet hardware*, 11/01/1982 (STD-37) {#P5}
5. RFC 959 : J. Postel, J. Reynolds, *File Transfer Protocol* (FTP), 10/01/1985 (STD-9){#P9}
6. RFC 1006, D. Cass, M. Rose, *ISO transport services on top of the TCP*: Version 3, 05/01/1987 (STD-35) {#P5}
7. RFC 1155, K. McCloghrie, M. Rose, *Structure and Identification of Management Information for TCP/IP-based Internets*, 05/01/1990 (STD-16) {#P5} {#P9}
8. RFC 1157, M. Schoffstall, M. Fedor, J. Davin, J. Case, *A Simple Network Management Protocol* (SNMP), 05/10/1990 (STD-15) {<DP4} {#P5} {#P9} {#P3}
9. RFC 1212, K. McCloghrie, M. Rose, *Concise MIB Definitions*, 03/26/1991 (STD-16) {#P5}
10. RFC 1213, K. McCloghrie, M. Rose, *Management Information Base for Network Management of TCP/IP-based internets*: MIB-II, 03/26/1991 (STD-17) {#P5} (Note: Updated by RFC 2011, 2012 and 2013)
11. RFC 1215, M. Rose, *A Convention for Defining Traps for use with the SNMP*, 03/27/1991 {<P5}
12. RFC 1305 : David L. Mills, *Network Time Protocol (Version 3) Specification, Implementation*, March 1992 {<3}
13. RFC 1332, G. McGregor, *The PPP Internet Protocol Control Protocol* (IPCP), 05/26/1992 {<P5} {<P3}
14. RFC 1350, *The TFTP Protocol*, Revision 2, 07/1992. {<P9}
15. RFC 1483, J. Heinanen, *Multiprotocol Encapsulation over ATM Adaptation Layer 5*, 07/20/1993 {<P5}
16. RFC 1514, P. Grillo, S. Waldbusser, *Host Resources MIB*, 09/23/1993 {<P5} {<P9}
17. RFC 1533, S. Alexander, R. Droms, *DHCP Options and BOOTP Vendor Extensions*, 10/08/1993 {<P5} {<P2} {<P3}
18. RFC 1541, R. Droms, *Dynamic Host Configuration Protocol*, 10/27/1993 {<P5} {<P2} {<P3}
19. RFC 1577, M. Laubach, *Classical IP and ARP over ATM*, 01/20/1994 {<P5}
20. RFC 1595, T. Brown, K. Tesink, *Definitions of Managed Objects for the SONET/SDH Interface Type*, 03/11/1994 {<P5}
21. RFC 1597, Y. Rekhter, R. Moskowitz, D. Karrenberg, G. de Groot, *Address Allocation for Private Internets*, 03/17/1994 {<P5}
22. RFC 1662, W. Simpson, *PPP in HDLC-like Framing*, 07/21/1994 (STD-51) {#P5} {#P3}
23. RFC 1700, J. Reynolds, J. Postel, *Assigned Numbers*, 10/20/1994 (STD-2) {#P5} {#P3}



--`,,```,,,,````-`-`,,`,,`,`,,`---

Copyright International Organization for Standardization
Provided by IHS under license with ISO
No reproduction or networking permitted without license from IHS Not for Resale

24. RFC 1717, K. Sklower, B. Lloyd, G. McGregor, D. Carr, *The PPP Multilink Protocol (MP),* 11/21/1994 {<P5} {<P3}
25. RFC 1825, R. Atkinson, *Security Architecture for the Internet Protocol*, August 1995 {<P7} {<P3}
26. RFC 1826, R. Atkinson, *IP Authentication Header,* August 1995 {<P7} {<P3}
27. RFC 1827, R. Atkinson , *IP Encapsulating Security Payload* (ESP), August 1995 {<P7} {<P3}
28. RFC 1902, *Structure of Management Information for version 2 of the Simple Network Management Protocol (SNMPv2).* {<P9}
29. RFC 1903, *Textual Conventions for version 2 of the Simple Network Management Protocol (SNMPv2).* {<P9}

### ISO (International Organization for Standardization)

1. ISO 639, *Codes for the representation of names of languages*.{#P6} {#P3}
2. ISO 3166, *Codes for the representation of names of countries.* {#P6} {#P3}

### ISO/IEC

1. ISO/IEC 7776: 1995, *Information technology—Telecommunications and information exchange between systems—High-level data link control procedures—Description of the X.25 LAPB-compatible DTE data link procedures.* {#P5}
2. ISO/IEC 7816-1:1987, *Identification cards - Integrated circuit(s) cards with contacts - Part 1: Physical Characteristics.* {#P7} {#P3}
3. ISO/IEC 7816-2:1988, *Identification cards - Integrated circuit(s) cards with contacts - Part 2: Dimensions and locations of the contacts.* {#P7} {#P3}
4. ISO/IEC 7816-3:1989, *Identification cards - Integrated circuit(s) cards with contacts - Part 3: Electronic signals and transmission protocols.* {#P7} {#P3}
5. ISO/IEC 7816-4:1995, *Identification cards - Integrated circuit(s) cards with contacts - Part 4: Interindustry commands for interchange*. {#P7} {#P3}
6. ISO/IEC 7816-5:1994, *Identification cards - Integrated circuit(s) cards with contacts - Part 5: Numbering system and registration procedure for application identifiers.* {#P7} {#P3}
7. ISO/IEC 7816-6:1996, *Identification cards - Integrated circuit(s) cards with contacts - Part 6: Interindustry data elements.* {#P7} {#P3}
8. ISO/IEC DIS 7816-8:1987, *Identification cards - Integrated circuit(s) cards with contacts - Part 8: Security Architecture and related interindustry commands (draft October 1996).* {#P7}
9. ISO/IEC 8802–2: 1994, *Information technology—Telecommunications and information exchange between systems—Local and metropolitan area networks—Specific requirements—Part 2: Logical link control.* {#P5}
10. ISO/IEC 8802–3: 1996, *Information technology—Local and metropolitan area networks—Part 3: Carrier sense multiple access with collision detection (CSMA/CD) access method and physical layer specifications.* {#P5} {#P4}
11. ISO/IEC 8859-1:1987, *Information technology - 8-bit single-byte coded graphic character sets – Part 1: Latin alphabet No. 1.* {#P6} {#P3}
12. ISO/IEC 8877: 1987, *Information technology—Telecommunications and information exchange between systems—Interface connector and contact assignments for ISDN Basic Access Interface located at reference points S and T.* {#P4}
13. ISO/IEC 9646:1995, *Information technology - Open Systems Interconnection - Conformance Testing Methodology and Framework.* (see also ITU-T Recommendations X.290-series) {<DP13}
    - Part 1:1994, *General Concepts.*
    - Part 2:1994, *Abstract Test Suite Specification.*
    - Part 3:1992, *The Tree and Tabular Combined Notation* (TTCN).
    - Part 4:1994, *Test Realization.*
    - Part 5:1994, *Requirements on Test Laboratories and Clients for the Conformance Assessment Process.*

 © ISO/IEC 1999 - All rights reserved

--`,,```,,,,````-`-`,,`,,`,`,,`---

Copyright International Organization for Standardization
Provided by IHS under license with ISO
No reproduction or networking permitted without license from IHS Not for Resale

- Part 6:1994, *Protocol Profile Test Specification.*
- Part 7:1995, *Implementation Conformance Statements - Requirements and Guidance on ICS and proformas.*


14. ISO/IEC 10165-6:1997, *Information technology - Open Systems Interconnection - Structure of Management Information: requirements and guidelines for implementation conformance statement proformas associated with OSI management information.* {<DP13}
15. ISO/IEC 10646-1, *Information technology - Universal Multiple-Octet Coded Character Set (UCS), part 1: Architecture and Basic Multilingual Plane"* (also known as Unicode). {#P6} {#P3}
16. ISO/IEC 11172–2:1993, *Information technology—Coding of moving pictures and associated audio for digital storage media at up to about 1,5 Mbit/s—Part 2: Video* (Note: known as MPEG-1). {#P5} {#P6} {#P3}
17. ISO/IEC 11172–3:1993, *Information technology—Coding of moving pictures and associated audio for digital storage media at up to about 1,5 Mbit/s—Part 3: Audio* (Note: known as MPEG-1). {#P5} {#P6} {#P3}
18. ISO/IEC 11801:1995, *Information technology—Generic cabling for customer premises.* {#P4}
19. ISO/IEC 13522–5:1997, *Information technology—Coding of multimedia and hypermedia information—Part 5: Support for base-level interactive applications* (Note: known as MHEG-5). {#P6} {#P9} {#P3}
20. ISO/IEC 13522-6, *Information technology - Coding of multimedia and hypermedia information - Part 6: Support for enhanced interactive applications.* {#P6} {#P3}
21. ISO/IEC 13818-3:1998, *Information technology – Generic coding of moving pictures and associated audio information – Part 3: Audio* (Note: known as MPEG-2 Audio). {#P5} {#P6} {#P9} {#P2}
22. ISO/IEC 13818–6:1998, *Information technology—Generic coding of moving pictures and associated audio information—Part 6: Extensions for DSM-CC.* {<3} {#P5} {#P6} {#P7} {#P9} {#P2} {<DP13} {#P3}
23. ISO/IEC 13818–9:1996, *Information technology—Generic coding of moving pictures and associated audio information—Part 9: Extension for real-time interface for systems decoders.* {#P4} {#P3}
24. ISO/IEC WD 13818-10, *Digital Storage Media - Command and Control Conformance Working Draft, March, 1996.* {<DP13}
25. ISO/IEC 14750, Information technology -- Open Distributed Processing - Interface Definition Language {<3} {#P5} {#P9} {#P3}
26. ISO/IEC TR 16501:1999, *Information technology – Generic digital audio-visual systems – Technical report on ISO/IEC 16500 – Description of digital audio-visual functionalities{<Pn}*
27. ISO/IEC Guide 2:1996, *Standardization and related activities -- General vocabulary* {<DP13}


### ISO|IEC|ITU


1. *Guide for ITU-T and ISO/IEC JTC 1 cooperation. Appendix II: Rules for presentation of ITU-T | ISO/IEC common text* (March, 1993) {<Pn}


### ITU-R (International Telecommunications Union - Radiocommunication Sector)


1. ITU General Secretariat, *Radio Regulations (1990), Volume 1, Article 8, Frequency Allocations Chapter RR8.* {#P4}
2. ITU-R BT.601-4, *Encoding parameters of digital television for studios.* {#P6} {#P3}
3. ITU-R BT.656, *Interfaces for digital component video signals in 525-line and 625-line television systems operating at the 4:2:2 level of Recommendation.* ITU-R BT.601 (Part A) {<P5} {#P4}
4. ITU-R BT.709-1, *Basic parameter values for the HDTV standard for the studio and for international program exchange.* {#P6} {#P3}
5. ITU-R BT.1208, *Video coding for digital terrestrial television broadcasting.* {#P6} {#P3}


### ITU-T (International Telecommunication Union - Telecommunication Standardization Sector)


1. ITU-T Recommendation E.164 / I.331 (1991), *Numbering plan for the ISDN era*. {#P5} {#P3}




Copyright International Organization for Standardization
Provided by IHS under license with ISO
No reproduction or networking permitted without license from IHS Not for Resale

2. ITU-T Recommendation G.117 (1988), *Transmission aspects of unbalance about earth (definitions and methods).* {#P4}
3. ITU-T Recommendation G.652 (1993), *Characteristics of a single-mode optical fiber cable.* {#P4}
4. ITU-T Recommendation G.704 (1995), *Synchronous frame structures used at 1544, 6312, 2048, 8448 and 44736 kbit/s hierarchical levels.*{#P4}
5. ITU-T Recommendation G.707 (1993), *Synchronous digital hierarchy bit rates.* {#P4}
6. ITU-T Recommendation G.708 (1993), *Network node interface for synchronous digital hierarchy*. {#P4}
7. ITU-T Recommendation G.709 (1993*), Digital transmission systems - Terminal Equipment - General, version.* {#P4}
8. ITU-T Recommendation G.774 (1992), *Synchronous digital hierarchy management information model for the network element view.* {#6 } {#P5}
9. ITU-T Recommendation G.774 (1996), *Corrigendum.* {#P8}
10. ITU-T Recommendation G.774-01 (1996), *SDH Performance Monitoring for the Network Element View.* {#P8}
11. ITU-T Recommendation G.774-01 (1996), *Corrigendum*. {#P8}
12. ITU-T Recommendation G.774-06 (1996), *SDH Unidirectional Performance Monitoring for the Network Element View.* {#P8}
13. ITU-T Recommendation G.804 (1994), *ATM cell mapping into plesiochronous digital hierarchy (PDH).* {#P4}
14. ITU-T Recommendation G.805 (1994), *Generic Functional Architecture of Transport Networks.* {<P8}
15. ITU-T Recommendation G.832 (1994), *Transport of SDH elements on PDH networks: Frame and multiplexing structures.* {#P4}
16. ITU-T Recommendation G.957 (1995), *Optical interfaces for equipment and systems relating to the synchronous digital hierarchy.* {#P4}
17. ITU-T Recommendation G.981 (1994), *PDH optical line systems for the local network.* {#P4}
18. ITU-T Recommendation I.150 (1995), *B-ISDN asynchronous transfer mode functional characteristics.* {#P5}
19. ITU-T Recommendation I.311 (1996), *B-ISDN general network aspects.* {#P5}
20. ITU-T Recommendation I.361 (1995), *B-ISDN ATM layer specification.* {#P5} {#P4} {#P2} {#P3}
21. ITU-T Recommendation I.363 (1993), *B-ISDN ATM adaptation layer (AAL) specification.* {<P5} {<P4} {<P2}
22. ITU-T Recommendation I.363.5 (1996*), B-ISDN ATM Adaptation Layer specification Type 5 AAL5.* {#P5} {#P4} {#P2}
23. ITU-T Recommendation I.413 (1993), *B-ISDN user-network interface*. {#P4}
24. ITU-T Recommendation I.430 (1995), *Basic user-network interface—Layer 1 specification.* {#P5} {#P4} {#P2} {<DP13}
25. ITU-T Recommendation I.431 (1993), *Primary rate user-network interface - Layer 1 specification.* {#P5}
26. ITU-T Recommendation I.432.1 (1996), *B-ISDN user-network interface—Physical layer specification: General characteristics.* {#P4}{#P2}
27. ITU-T Recommendation I.432.2 (1996), *B-ISDN user-network interface-Physical layer specification: 155 520 kbit/s and 622 080 kbit/s operation.* {#P4}{#P2}
28. ITU-T Recommendation I.610 (1995), *B-ISDN operation and maintenance principles and functions.* {#P5}
29. ITU-T Recommendation I.751 (1996), *Asynchronous Transfer Mode (ATM), Management of the network element view.* {#P8}
30. ITU-T Recommendation M.3010 (1992), *Principles for a Telecommunication Management Network* (CMIP). {<DP4} {#P8} {#P9}
31. ITU-T Recommendation M.3020 (1995), *TMN interface specification methodology.* {#P8}
32. ITU-T Recommendation M.3100 (1995), *Generic network information model.* {#P8} {#P5}


 © ISO/IEC 1999 - All rights reserved

Copyright International Organization for Standardization
Provided by IHS under license with ISO
No reproduction or networking permitted without license from IHS Not for Resale

33. ITU-T (CCITT) Recommendation M.3200 (1992), *TMN management services: overview.* {#P8}
34. ITU-T (CCITT) Recommendation M.3400 (1992), *TMN management functions.* {#P8} {#P9}
35. ITU-T Recommendation O.9 (1988), [Blue Book FASC IV.4], *Measuring arrangements to assess the degree of unbalance about earth.* {#P4}
36. ITU-T Recommendation Q.811 (1993), *Lower layer protocol profiles for the Q3 interface.* {#P8}
37. ITU-T Recommendation Q.812 (1993), *Upper layer protocol profiles for the Q3 interface.* {#P8}
38. ITU-T Recommendation Q.821 (1992), Stage 2 and 3 Functional Descriptions for the Q3 Interface - Alarm Surveillance. {#P8}
39. ITU-T Recommendation Q.822 (1994), *Stage 1, Stage2, Stage 3 description for the Q3 interface—Performance management*. {#P8} {#P5}
40. ITU-T Recommendation Q.2110 (1994), *B-ISDN ATM Adaptation Layer—Service Specific Connection Oriented Protocol (SSCOP).* {#P5} {#P2}
41. ITU-T Recommendation Q.2120 (1995), *B-ISDN meta-signaling protocol (SAAL).* {#P5}
42. ITU-T Recommendation Q.2130 (1994), *B-ISDN Signaling ATM Adaptation Layer—Service Specific Coordination Function for Support of Signaling at the User Network Interface (SSCF at UNI).* {#P5} {#P2}
43. ITU-T Recommendation Q.2931 (1995), *Broadband integrated services digital network (B-ISDN). Digital Subscriber Signaling System No.2 (DSS 2). User-network interface (UNI) Layer 3 specification for basic call/connection control*. {#P5} {#P2}
44. ITU-T recommendation V.22 (1988), *1200 bits per second duplex modem standardized for use on the general switched telephone network and on point-to-point 2-wire leased telephone-type circuits.* {#P4} {#P3}
45. ITU-T Recommendation V.22 bis (1988), *2400 bits per second duplex modem using the frequency division technique standardized for use on the general switched telephone network and on point-to-point 2-wire leased telephone-type circuits.* {#P4} {#P2} {#P3}
46. ITU-T Recommendation V.32 (1993), *A family of 2-wire, duplex modems operating at data signaling rates of up to 9600 bit/s for use on the general switched telephone network and on leased telephone-type circuits.* {#P4} {#P3}
47. ITU-T Recommendation V.32 bis (1991), *A duplex modem operating at data signaling rates of up to 14400 bit/s for use on a general switched telephone network and on leased point-to-point 2-wire telephone-type circuits*. {#P4} {#P3}
48. ITU-T Recommendation V.34 (1994), *A modem operating at data signaling rates of up to 28800 bit/s for use on the general switched telephone network and on leased point-to-point 2-wire telephone-type circuits*, version September 1994, published December 1994. {#P4} {#P3}
49. ITU-T (CCITT) Recommendation V.35, *Data transmission at 48 Kilobits per second using 60–108 kHz Group Band Circuits.* {#P5}
50. ITU-T Recommendation X.25 (1993), *Interface between data terminal equipment (DTE) and data circuit-terminating equipment (DCE) for terminals operating in the packet mode and connected to public data networks by dedicated circuit.* {#P5}
51. ITU-T Recommendation X.26 (1993), *Electrical characteristics for unbalanced double-current interchange circuits at data signaling rates nominally up to 100 kbs* [Note: Identical to CCITT V.10]. {#P9}
52. ITU Recommendation X.509 (1996), *Information technology - Open System Interconnection - The Directory: Authentication Framework, Amendment 2.* {#P7}
53. ITU-T Recommendation X.511 (1996), *Information technology - Open System Interconnection - The Directory: Abstract Service Definition, Amendment 4.* {#P7}
54. CCITT Recommendation X.700 (1992), *Management framework for Open Systems Interconnection (OSI) for CCITT applications.* {#P8}
55. CCITT Recommendation X.701 (1992), *Information technology – Open Systems Interconnection – Systems management overview.* {#P8}
56. ITU-T Recommendation X.710 (1991), *Common management information service definition for CCITT applications.* {#P5}




Copyright International Organization for Standardization
Provided by IHS under license with ISO
No reproduction or networking permitted without license from IHS Not for Resale

57. ITU-T Recommendation X.711 (1991), *Common Management Information Protocol, Specification for CCITT applications.* {#P8} {#P5} {#P9}
58. ITU-T Recommendation X.745 (1993), *Test management function.* {#P8}

**NIST (National Institute of Standards and Technology)**

1. NIST IR 5438, *Industry/Government Open Systems Specification Testing Framework*, Version 1.0, Jean-Philippe Favreau (ed.), June 1994 (PB94-219110 June 1994). {<DP13}
available at http://snad.ncsl.nist.gov/madvtg/IGOSS/igoss.html

**NMF (Network Management Forum)**

1. Network Management Forum : Forum 026, *Translation of Internet MIBs to ISO/CCITT GDMO MIBS*, Issue 1.0, 1993. {<P8}
2. Network Management Forum : Forum 028, *ISO/CCITT to Internet Management Proxy*, Issue 1.0, 1993. {<P8}
3. Network Management Forum : *Service Management Business Process Model*, 1995. {<P8}

**OMG (Object Management Group)**

1. *Common Object Request Broker: Architecture and Specification*, version 2.1, 25 February 1997 (Note: known as OMG CORBA 2.1). {<3} {#P5} {#P2} {#P3}
available at ftp://ftp.omg.org/pub/docs/formal/97-09-01.pdf

**OSTC (Open Systems Testing Consortium)**

1. OSTC CTS4/IOP : *Interoperability Testing Methodology and Framework, Version 1.1, 1995.* {<DP13}

**PCMCIA (Personal Computer Memory Card International Association)**

1. Personal Computer Memory Card International Association, *PC Card Standard, Volume 2 - Electrical Specification*, February 1995 {#P7} {#P3}
2. Personal Computer Memory Card International Association, *PC Card Standard, Volume 3 - Physical Specification*, February 1995 {#P7} {#P3}
3. Personal Computer Memory Card International Association, *PC Card Standard, Volume 4 - Metaformat Specification*, February 1995 {#P7} {#P3}

**Philips Semiconductor B.V.**

1. *The $I^2C$-bus and How to Use It (Including Specifications),* 1995 Update, Philips Semiconductor Specification released April 1995, by Philips Semiconductor, Document number 9398-393-40011 {#P4} {#P3}
2. *$I^2S$ specification* in Philips Semiconductors *Audio/Radio Handbook "Bus Specification"*, 1993 {<P5}

**SCTE (Society of Cable Telecommunications Engineers, Inc.)**

1. SCTE DVS/026, *Digital Video: Subtitling methods for Broadcast Cable.* {#P6}

**SMPTE (Society of Motion Picture & Television Engineers)**

1. SMPTE 274M *see* ANSI SMPTE 274M-1995
2. SMPTE S17.392 *see* ANSI SMPTE 296M-1997

**Sun Microsystems Inc.**

1. Java API, J. Gosling, F. Yellin and the Java team, *The Java Application Programming Interface, Volume 1: Core Packages*, Addison-Wesley, ISBN 0-201-63453-8 {<P6} {<P3}
2. Java VM, T. Lindholm and F. Yellin, *The Java Virtual machine specification,* Addison-Wesley, ISBN 0-201-63452-X {<P6} {<P3}

 © ISO/IEC 1999 - All rights reserved

Copyright International Organization for Standardization
Provided by IHS under license with ISO
No reproduction or networking permitted without license from IHS Not for Resale

### United States Coastguard

1. *Global Positioning System*. US Coastguard Navigation Center {<3}

### W3C (WorldWide Web Consortium)

1. CSS-1, *Cascading Style Sheets, level 1*; by Håkon Wium Lie and Bert Bos, 17-December-96 {#P6}
   available at http://www.w3.org/TR/REC-CSS1-961217
2. HTML 3.2, *HyperText Mark-up Language reference specification*, by Dave Raggett, 14-Jan-1997 {#P6} {#P3}
   available at http://www.w3.org/TR/REC-html32.html
3. PNG *Portable Network Graphics version 1, 01*-October-1996 {#P6}
   available at http://www.w3.org/TR/REC-png.html

## E.4 Other Informative References


1. Braek, R., Haugen, O., Haugen, Y., *Engineering real-time systems: an object-oriented methodology using SDL (The BCS Practitioner)*. Prentice Hall, 1993. ISBN: 0130344486 {<P8}
2. CCITT IXth Plenary Assembly, Melbourne, 14-25 November 1988, Blue Book, Volume I – Fascicle I.3: *Terms and definitions. Abbreviations and acronyms. Recommendations on: means of expression* (Series B), General telecommunications statistics (Series C). (Geneva: International Telecommunications Union, 1989) {<P1}
3. CCITT IXth Plenary Assembly, Melbourne, 14-25 November 1988, Blue Book, Volume VII – Fascicle VII.3: *Terminal equipment and protocols for telematic services. Recommendations T.0-T.63. (Rec. T62).* (Geneva: International Telecommunications Union, 1989) {<P1}
4. CCITT Study Group X, Report on the Meeting Held in Geneva from 18 to 27 May 1992; Part II.4–*New Annex B to Recommendation Z.100–Glossary, COM X-R 27-E*, (Geneva: International Telecommunications Union, July 1992) {<P1}
5. Hall, Jane (ed.), *Management of Telecommunication Systems and Services : Modeling and Implementing TMN-Based Multi-Domain Management*. Springer Verlag, 1996. ISBN: 3540615784 (Springer Verlag Lecture Notes in Computer Science 1116) {<P8}
6. Prospect Consortium, Prospect World Document: *Contextual description for work of the Prospect Consortium ACTS AC052, January 1997* {<P8}
   available at http://www.fokus.gmd.de/minos/prospect/documents/pwor.ps.gz
7. Reed, Rick (and others), *Specs: Specification and Programming Environment for Communication Software*: The Specs Consortium. North-Holland, 1993. ISBN: 0444899235 {<P8}
8. Rumbaugh, J (and others), *Object-Oriented Modeling and Design.* Prentice Hall, 1991. ISBN: 0136298419 {<P8}
9. Telecommunications Information Networking Architecture Consortium, *TINA-C service architecture, v2.0 March 1995 and v5.0 June 1997* {<P8} v5.0 available at http://www.tinac.com/97/sa50-main.pdf and http://www.tinac.com/97/sa50-annex.pdf
10. Tschichholz, M. (ed.), *A Prospect of Multi-Domain Management in the Expected Open Service Market: The Initial PROSPECT System Model, February 1996* (Prospect Consortium ACTS AC052) {<P8}
    available at
    http://olympus.algo.com.gr/acts/dolphin/cd-rom/html/prospect/d22a/d22a.html
11. *Unified Modeling Language (UML) Summary version 1.0 January 1997*
    v1.1 available at http://www.rational.com/uml/documentation.html is a component of the OMG's Object Management Architecture (OMA).{<P8}




Copyright International Organization for Standardization
Provided by IHS under license with ISO
No reproduction or networking permitted without license from IHS Not for Resale

**ICS 35.040**

Price based on 73 pages

© ISO/IEC 1999 – All rights reserved

Copyright International Organization for Standardization
Provided by IHS under license with ISO
No reproduction or networking permitted without license from IHS

Not for Resale