INTERNATIONAL STANDARD

ISO/IEC 16262

Second edition
2002-06-01

Information technology — ECMAScript language specification

Technologies de l'information — ECMAScript spécifications du langage

Reference number
ISO/IEC 16262:2002(E)

© ISO/IEC 2002

--`,,```,,,,````-`-`,,`,,`,`,,`---

Copyright International Organization for Standardization
Provided by IHS under license with ISO
No reproduction or networking permitted without license from IHS

Not for Resale

PDF disclaimer

This PDF file may contain embedded typefaces. In accordance with Adobe's licensing policy, this file may be printed or viewed but shall not be edited unless the typefaces which are embedded are licensed to and installed on the computer performing the editing. In downloading this file, parties accept therein the responsibility of not infringing Adobe's licensing policy. The ISO Central Secretariat accepts no liability in this area.

Adobe is a trademark of Adobe Systems Incorporated.

Details of the software products used to create this PDF file can be found in the General Info relative to the file; the PDF-creation parameters were optimized for printing. Every care has been taken to ensure that the file is suitable for use by ISO member bodies. In the unlikely event that a problem relating to it is found, please inform the Central Secretariat at the address given below.

© ISO/IEC 2002

All rights reserved. Unless otherwise specified, no part of this publication may be reproduced or utilized in any form or by any means, electronic or mechanical, including photocopying and microfilm, without permission in writing from either ISO at the address below or ISO's member body in the country of the requester.

ISO copyright office
Case postale 56 • CH-1211 Geneva 20
Tel. + 41 22 749 01 11
Fax + 41 22 749 09 47
E-mail copyright@iso.ch
Web www.iso.ch

Printed in Switzerland

Copyright International Organization for Standardization
Provided by IHS under license with ISO
No reproduction or networking permitted without license from IHS

© ISO/IEC 2002 – All rights reserved

Not for Resale

Contents

Page

1 Scope **1**

2 Conformance **1**

3 Normative References **1**

4 Overview **2**
4.1 Web Scripting 2
4.2 Language Overview 2
4.2.1 Objects 3
4.3 Terms and Definitions 4
4.3.1 Type 4
4.3.2 Primitive Value 4
4.3.3 Object 4
4.3.4 Constructor 4
4.3.5 Prototype 5
4.3.6 Native Object 5
4.3.7 Built-in Object 5
4.3.8 Host Object 5
4.3.9 Undefined Value 5
4.3.10 Undefined Type 5
4.3.11 Null Value 5
4.3.12 Null Type 5
4.3.13 Boolean Value 5
4.3.14 Boolean Type 5
4.3.15 Boolean Object 5
4.3.16 String Value 6
4.3.17 String Type 6
4.3.18 String Object 6
4.3.19 Number Value 6
4.3.20 Number Type 6
4.3.21 Number Object 6
4.3.22 Infinity 6
4.3.23 NaN 6

5 Notational Conventions **6**
5.1 Syntactic and Lexical Grammars 6
5.1.1 Context-Free Grammars 6
5.1.2 The Lexical and RegExp Grammars 7
5.1.3 The Numeric String Grammar 7
5.1.4 The Syntactic Grammar 7
5.1.5 Grammar Notation 8
5.2 Algorithm Conventions 10

6 Source Text **11**

7 Lexical Conventions **11**
7.1 Unicode Format-Control Characters 12
7.2 White Space 12
7.3 Line Terminators 12
7.4 Comments 13
7.5 Tokens 14

© ISO/IEC 2002 – All rights reserved

Copyright International Organization for Standardization
Provided by IHS under license with ISO
No reproduction or networking permitted without license from IHS
Not for Resale

7.5.1 Reserved Words 14
7.5.2 Keywords 14
7.5.3 Future Reserved Words 14
7.6 Identifiers 15
7.7 Punctuators 16
7.8 Literals 16
7.8.1 Null Literals 16
7.8.2 Boolean Literals 17
7.8.3 Numeric Literals 17
7.8.4 String Literals 19
7.8.5 Regular Expression Literals 21
7.9 Automatic Semicolon Insertion 22
7.9.1 Rules of Automatic Semicolon Insertion 22
7.9.2 Examples of Automatic Semicolon Insertion 23

8 Types 24
8.1 The Undefined Type 24
8.2 The Null Type 24
8.3 The Boolean Type 24
8.4 The String Type 24
8.5 The Number Type 25
8.6 The Object Type 26
8.6.1 Property Attributes 26
8.6.2 Internal Properties and Methods 26
8.7 The Reference Type 29
8.7.1 GetValue (V) 30
8.7.2 PutValue (V, W) 30
8.8 The List Type 30
8.9 The Completion Type 30

9 Type Conversion 30
9.1 ToPrimitive 30
9.2 ToBoolean 31
9.3 ToNumber 31
9.3.1 ToNumber Applied to the String Type 31
9.4 ToInteger 34
9.5 ToInt32: (Signed 32 Bit Integer) 34
9.6 ToUint32: (Unsigned 32 Bit Integer) 35
9.7 ToUint16: (Unsigned 16 Bit Integer) 35
9.8 ToString 35
9.8.1 ToString Applied to the Number Type 36
9.9 ToObject 37

10 Execution Contexts 37
10.1 Definitions 37
10.1.1 Function Objects 37
10.1.2 Types of Executable Code 37
10.1.3 Variable Instantiation 38
10.1.4 Scope Chain and Identifier Resolution 38
10.1.5 Global Object 38
10.1.6 Activation Object 39
10.1.7 This 39
10.1.8 Arguments Object 39
10.2 Entering An Execution Context 39
10.2.1 Global Code 39
10.2.2 Eval Code 40
10.2.3 Function Code 40

11 Expressions 40

© ISO/IEC 2002 – All rights reserved
Copyright International Organization for Standardization
Provided by IHS under license with ISO
No reproduction or networking permitted without license from IHS
Not for Resale

11.1 Primary Expressions 40
11.1.1 The this Keyword 40
11.1.2 Identifier Reference 40
11.1.3 Literal Reference 40
11.1.4 Array Initialiser 40
11.1.5 Object Initialiser 42
11.1.6 The Grouping Operator 43
11.2 Left-Hand-Side Expressions 43
11.2.1 Property Accessors 44
11.2.2 The new Operator 44
11.2.3 Function Calls 45
11.2.4 Argument Lists 45
11.2.5 Function Expressions 45
11.3 Postfix Expressions 46
11.3.1 Postfix Increment Operator 46
11.3.2 Postfix Decrement Operator 46
11.4 Unary Operators 46
11.4.1 The delete Operator 46
11.4.2 The void Operator 47
11.4.3 The typeof Operator 47
11.4.4 Prefix Increment Operator 47
11.4.5 Prefix Decrement Operator 47
11.4.6 Unary + Operator 47
11.4.7 Unary − Operator 48
11.4.8 Bitwise NOT Operator (~) 48
11.4.9 Logical NOT Operator (!) 48
11.5 Multiplicative Operators 48
11.5.1 Applying the * Operator 49
11.5.2 Applying the / Operator 49
11.5.3 Applying the % Operator 49
11.6 Additive Operators 50
11.6.1 The Addition operator (+) 50
11.6.2 The Subtraction Operator (−) 51
11.6.3 Applying the Additive Operators (+, −) to Numbers 51
11.7 Bitwise Shift Operators 51
11.7.1 The Left Shift Operator (<<) 51
11.7.2 The Signed Right Shift Operator (>>) 52
11.7.3 The Unsigned Right Shift Operator (>>>) 52
11.8 Relational Operators 52
11.8.1 The Less-than Operator (<) 53
11.8.2 The Greater-than Operator (>) 53
11.8.3 The Less-than-or-equal Operator (<=) 53
11.8.4 The Greater-than-or-equal Operator (>=) 53
11.8.5 The Abstract Relational Comparison Algorithm 54
11.8.6 The instanceof operator 54
11.8.7 The in operator 54
11.9 Equality Operators 55
11.9.1 The Equals Operator (==) 55
11.9.2 The Does-not-equals Operator (!=) 55
11.9.3 The Abstract Equality Comparison Algorithm 56
11.9.4 The Strict Equals Operator (===) 57
11.9.5 The Strict Does-not-equal Operator (!==) 57
11.9.6 The Strict Equality Comparison Algorithm 57
11.10 Binary Bitwise Operators 57
11.11 Binary Logical Operators 58
11.12 Conditional Operator (?:) 59
11.13 Assignment Operators 60
11.13.1 Simple Assignment (=) 60

© ISO/IEC 2002 – All rights reserved

Copyright International Organization for Standardization
Provided by IHS under license with ISO
No reproduction or networking permitted without license from IHS
Not for Resale

11.13.2 Compound Assignment (op=) 60
11.14 Comma Operator (,) 60

12 Statements 61
12.1 Block 61
12.2 Variable statement 62
12.3 Empty Statement 63
12.4 Expression Statement 63
12.5 The if Statement 64
12.6 Iteration Statements 64
12.6.1 The do-while Statement 65
12.6.2 The while statement 65
12.6.3 The for Statement 65
12.6.4 The for-in Statement 66
12.7 The continue Statement 67
12.8 The break Statement 67
12.9 The return Statement 68
12.10 The with Statement 68
12.11 The switch Statement 68
12.12 Labelled Statements 70
12.13 The throw statement 70
12.14 The try statement 71

13 Function Definition 72
13.1 Definitions 73
13.1.1 Equated Grammar Productions 73
13.1.2 Joined Objects 73
13.2 Creating Function Objects 73
13.2.1 [[Call]] 75
13.2.2 [[Construct]] 75

14 Program 75

15 Native ECMAScript Objects 76
15.1 The Global Object 77
15.1.1 Value Properties of the Global Object 77
15.1.2 Function Properties of the Global Object 77
15.1.3 URI Handling Function Properties 79
15.1.4 Constructor Properties of the Global Object 83
15.1.5 Other Properties of the Global Object 84
15.2 Object Objects 84
15.2.1 The Object Constructor Called as a Function 84
15.2.2 The Object Constructor 84
15.2.3 Properties of the Object Constructor 84
15.2.4 Properties of the Object Prototype Object 85
15.2.5 Properties of Object Instances 86
15.3 Function Objects 86
15.3.1 The Function Constructor Called as a Function 86
15.3.2 The Function Constructor 86
15.3.3 Properties of the Function Constructor 87
15.3.4 Properties of the Function Prototype Object 87
15.3.5 Properties of Function Instances 88
15.4 Array Objects 88
15.4.1 The Array Constructor Called as a Function 89
15.4.2 The Array Constructor 89
15.4.3 Properties of the Array Constructor 89
15.4.4 Properties of the Array Prototype Object 90
15.4.5 Properties of Array Instances 97

Copyright International Organization for Standardization
Provided by IHS under license with ISO
No reproduction or networking permitted without license from IHS
Not for Resale
© ISO/IEC 2002 – All rights reserved

15.5 String Objects 98
15.5.1 The String Constructor Called as a Function 98
15.5.2 The String Constructor 98
15.5.3 Properties of the String Constructor 99
15.5.4 Properties of the String Prototype Object 99
15.5.5 Properties of String Instances 106
15.6 Boolean Objects 107
15.6.1 The Boolean Constructor Called as a Function 107
15.6.2 The Boolean Constructor 107
15.6.3 Properties of the Boolean Constructor 107
15.6.4 Properties of the Boolean Prototype Object 107
15.6.5 Properties of Boolean Instances 108
15.7 Number Objects 108
15.7.1 The Number Constructor Called as a Function 108
15.7.2 The Number Constructor 108
15.7.3 Properties of the Number Constructor 108
15.7.4 Properties of the Number Prototype Object 109
15.7.5 Properties of Number Instances 112
15.8 The Math Object 112
15.8.1 Value Properties of the Math Object 112
15.8.2 Function Properties of the Math Object 113
15.9 Date Objects 118
15.9.1 Overview of Date Objects and Definitions of Internal Operators 118
15.9.2 The Date Constructor Called as a Function 122
15.9.3 The Date Constructor 122
15.9.4 Properties of the Date Constructor 123
15.9.5 Properties of the Date Prototype Object 124
15.9.6 Properties of Date Instances 131
15.10 RegExp (Regular Expression) Objects 131
15.10.1 Patterns 131
15.10.2 Pattern Semantics 133
15.10.3 The RegExp Constructor Called as a Function 145
15.10.4 The RegExp Constructor 145
15.10.5 Properties of the RegExp Constructor 146
15.10.6 Properties of the RegExp Prototype Object 146
15.10.7 Properties of RegExp Instances 147
15.11 Error Objects 148
15.11.1 The Error Constructor Called as a Function 148
15.11.2 The Error Constructor 148
15.11.3 Properties of the Error Constructor 148
15.11.4 Properties of the Error Prototype Object 148
15.11.5 Properties of Error Instances 149
15.11.6 Native Error Types Used in This Standard 149
15.11.7 NativeError Object Structure 149

16 Errors 151

Annex A (informative) **Grammar Summary 152**
A.1 Lexical Grammar 152
A.2 Number Conversions 156
A.3 Expressions 157
A.4 Statements 161
A.5 Functions and Programs 163
A.6 Universal Resource Identifier Character Classes 163
A.7 Regular Expressions 164

Annex B (informative) **Compatibility 166**
B.1 Additional Syntax 166
B.1.1 Numeric Literals 166

© ISO/IEC 2002 – All rights reserved

Copyright International Organization for Standardization
Provided by IHS under license with ISO
No reproduction or networking permitted without license from IHS
Not for Resale

B.1.2 String Literals 166
B.2 Additional Properties 167
B.2.1 escape (string) 167
B.2.2 unescape (string) 168
B.2.3 String.prototype.substr (start, length) 168
B.2.4 Date.prototype.getYear ( ) 169
B.2.5 Date.prototype.setYear (year) 169
B.2.6 Date.prototype.toGMTString ( ) 169

© ISO/IEC 2002 – All rights reserved
Copyright International Organization for Standardization
Provided by IHS under license with ISO
No reproduction or networking permitted without license from IHS
Not for Resale

Foreword

ISO (the International Organization for Standardization) and IEC (the International Electrotechnical Commission) form the specialized system for worldwide standardization. National bodies that are members of ISO or IEC participate in the development of International Standards through technical committees established by the respective organization to deal with particular fields of technical activity. ISO and IEC technical committees collaborate in fields of mutual interest. Other international organizations, governmental and non-governmental, in liaison with ISO and IEC, also take part in the work. In the field of information technology, ISO and IEC have established a joint technical committee, ISO/IEC JTC 1.

International Standards are drafted in accordance with the rules given in the ISO/IEC Directives, Part 3.

The main task of the joint technical committee is to prepare International Standards. Draft International Standards adopted by the joint technical committee are circulated to national bodies for voting. Publication as an International Standard requires approval by at least 75 % of the national bodies casting a vote.

Attention is drawn to the possibility that some of the elements of this International Standard may be the subject of patent rights. ISO and IEC shall not be held responsible for identifying any or all such patent rights.

ISO/IEC 16262 was prepared by ECMA (as ECMA-262) and was adopted, under a special “fast-track procedure”, by Joint Technical Committee ISO/IEC JTC 1, *Information technology*, Subcommittee SC 22, *Programming languages, their environments and system software interfaces*, in parallel with its approval by national bodies of ISO and IEC.

This second edition cancels and replaces the first edition (ISO/IEC 16262:1998), which has been technically revised.

Annexes A and B of this International Standard are for information only.

© ISO/IEC 2002 – All rights reserved

Copyright International Organization for Standardization
Provided by IHS under license with ISO
No reproduction or networking permitted without license from IHS
Not for Resale

Information technology — ECMAScript language specification

1 Scope

This International Standard defines the ECMAScript scripting language.

2 Conformance

A conforming implementation of ECMAScript must provide and support all the types, values, objects, properties, functions, and program syntax and semantics described in this specification.

A conforming implementation of this International Standard shall interpret characters in conformance with the Unicode Standard, Version 2.1 or later, and ISO/IEC 10646-1 with either UCS-2 or UTF-16 as the adopted encoding form, implementation level 3. If the adopted ISO/IEC 10646-1 subset is not otherwise specified, it is presumed to be the BMP subset, collection 300. If the adopted encoding form is not otherwise specified, it presumed to be the UTF-16 encoding form.

A conforming implementation of ECMAScript is permitted to provide additional types, values, objects, properties, and functions beyond those described in this specification. In particular, a conforming implementation of ECMAScript is permitted to provide properties not described in this specification, and values for those properties, for objects that are described in this specification.

A conforming implementation of ECMAScript is permitted to support program and regular expression syntax not described in this specification. In particular, a conforming implementation of ECMAScript is permitted to support program syntax that makes use of the “future reserved words” listed in section 7.5.3 of this specification.

3 Normative References

The following normative documents contain provisions which, through reference in this text, constitute provisions of this International Standard. For dated references, subsequent amendments to, or revisions of, any of these publications do not apply. However, parties to agreements based on this International Standard are encouraged to investigate the possibility of applying the most recent editions of the normative documents indicated below. For undated references, the latest edition of the normative document referred to applies. Members of ISO and IEC maintain registers of currently valid International Standards.

ISO/IEC 9899:1999 *Programming languages – C,* including Technical Corrigendum 1

ISO/IEC 10646-1:2000 *Information technology – Universal Multiple-Octet Coded Character Set (UCS) – Part 1: Architecture and Basic Multilingual Plane,* including Amendment 1

Unicode Inc. (1996), The Unicode Standard™, Version 2.0. ISBN: 0-201-48345-9, Addison-Wesley Publishing Co., Menlo Park, California.

Unicode Inc. (1998), Unicode Technical Report #8: The Unicode Standard™, Version 2.1.

Unicode Inc. (1998), Unicode Technical Report #15: Unicode Normalization Forms.

ANSI/IEEE Std 754-1985: IEEE Standard for Binary Floating-Point Arithmetic. Institute of Electrical and Electronic Engineers, New York (1985).

© ISO/IEC 2002 – All rights reserved

Copyright International Organization for Standardization
Provided by IHS under license with ISO
No reproduction or networking permitted without license from IHS
Not for Resale

4 Overview

This section contains a non-normative overview of the ECMAScript language.

ECMAScript is an object-oriented programming language for performing computations and manipulating computational objects within a host environment. ECMAScript as defined here is not intended to be computationally self-sufficient; indeed, there are no provisions in this specification for input of external data or output of computed results. Instead, it is expected that the computational environment of an ECMAScript program will provide not only the objects and other facilities described in this specification but also certain environment-specific *host* objects, whose description and behaviour are beyond the scope of this specification except to indicate that they may provide certain properties that can be accessed and certain functions that can be called from an ECMAScript program.

A ***scripting language*** is a programming language that is used to manipulate, customise, and automate the facilities of an existing system. In such systems, useful functionality is already available through a user interface, and the scripting language is a mechanism for exposing that functionality to program control. In this way, the existing system is said to provide a host environment of objects and facilities, which completes the capabilities of the scripting language. A scripting language is intended for use by both professional and non-professional programmers. To accommodate non-professional programmers, some aspects of the language may be somewhat less strict.

ECMAScript was originally designed to be a ***Web scripting language***, providing a mechanism to enliven Web pages in browsers and to perform server computation as part of a Web-based client-server architecture. ECMAScript can provide core scripting capabilities for a variety of host environments, and therefore the core scripting language is specified in this document apart from any particular host environment.

Some of the facilities of ECMAScript are similar to those used in other programming languages; in particular Java™ and Self, as described in:

- Gosling, James, Bill Joy and Guy Steele. The Java™ Language Specification. Addison Wesley Publishing Co., 1996.
- Ungar, David, and Smith, Randall B. Self: The Power of Simplicity. OOPSLA '87 Conference Proceedings, pp. 227–241, Orlando, FL, October 1987.

4.1 Web Scripting

A web browser provides an ECMAScript host environment for client-side computation including, for instance, objects that represent windows, menus, pop-ups, dialog boxes, text areas, anchors, frames, history, cookies, and input/output. Further, the host environment provides a means to attach scripting code to events such as change of focus, page and image loading, unloading, error and abort, selection, form submission, and mouse actions. Scripting code appears within the HTML and the displayed page is a combination of user interface elements and fixed and computed text and images. The scripting code is reactive to user interaction and there is no need for a main program.

A web server provides a different host environment for server-side computation including objects representing requests, clients, and files; and mechanisms to lock and share data. By using browser-side and server-side scripting together, it is possible to distribute computation between the client and server while providing a customised user interface for a Web-based application.

Each Web browser and server that supports ECMAScript supplies its own host environment, completing the ECMAScript execution environment.

4.2 Language Overview

The following is an informal overview of ECMAScript—not all parts of the language are described. This overview is not part of the standard proper.

ECMAScript is object-based: basic language and host facilities are provided by objects, and an ECMAScript program is a cluster of communicating objects. An ECMAScript ***object*** is an unordered collection of ***properties***

© ISO/IEC 2002 – All rights reserved
Copyright International Organization for Standardization
Provided by IHS under license with ISO
No reproduction or networking permitted without license from IHS
Not for Resale

each with zero or more ***attributes*** that determine how each property can be used—for example, when the ReadOnly attribute for a property is set to **true**, any attempt by executed ECMAScript code to change the value of the property has no effect. Properties are containers that hold other objects, ***primitive values***, or ***methods***. A primitive value is a member of one of the following built-in types: **Undefined**, **Null**, **Boolean**, **Number**, and **String**; an object is a member of the remaining built-in type **Object**; and a method is a function associated with an object via a property.

ECMAScript defines a collection of ***built-in objects*** that round out the definition of ECMAScript entities. These built-in objects include the **Global** object, the **Object** object, the **Function** object, the **Array** object, the **String** object, the **Boolean** object, the **Number** object, the **Math** object, the **Date** object, the **RegExp** object and the Error objects **Error, EvalError**, **RangeError, ReferenceError, SyntaxError, TypeError** and **URIError**.

ECMAScript also defines a set of built-in ***operators*** that may not be, strictly speaking, functions or methods. ECMAScript operators include various unary operations, multiplicative operators, additive operators, bitwise shift operators, relational operators, equality operators, binary bitwise operators, binary logical operators, assignment operators, and the comma operator.

ECMAScript syntax intentionally resembles Java syntax. ECMAScript syntax is relaxed to enable it to serve as an easy-to-use scripting language. For example, a variable is not required to have its type declared nor are types associated with properties, and defined functions are not required to have their declarations appear textually before calls to them.

4.2.1 Objects

ECMAScript does not contain proper classes such as those in C++, Smalltalk, or Java, but rather, supports ***constructors*** which create objects by executing code that allocates storage for the objects and initialises all or part of them by assigning initial values to their properties. All constructors are objects, but not all objects are constructors. Each constructor has a **Prototype** property that is used to implement ***prototype-based inheritance*** and ***shared properties***. Objects are created by using constructors in **new** expressions; for example, `new String("A String")` creates a new String object. Invoking a constructor without using **new** has consequences that depend on the constructor. For example, `String("A String")` produces a primitive string, not an object.

ECMAScript supports *prototype-based inheritance*. Every constructor has an associated prototype, and every object created by that constructor has an implicit reference to the prototype (called the *object's prototype*) associated with its constructor. Furthermore, a prototype may have a non-null implicit reference to its prototype, and so on; this is called the *prototype chain*. When a reference is made to a property in an object, that reference is to the property of that name in the first object in the prototype chain that contains a property of that name. In other words, first the object mentioned directly is examined for such a property; if that object contains the named property, that is the property to which the reference refers; if that object does not contain the named property, the prototype for that object is examined next; and so on.

In a class-based object-oriented language, in general, state is carried by instances, methods are carried by classes, and inheritance is only of structure and behaviour. In ECMAScript, the state and methods are carried by objects, and structure, behaviour, and state are all inherited.

All objects that do not directly contain a particular property that their prototype contains share that property and its value. The following diagram illustrates this:

© ISO/IEC 2002 – All rights reserved

Copyright International Organization for Standardization
Provided by IHS under license with ISO
No reproduction or networking permitted without license from IHS
Not for Resale

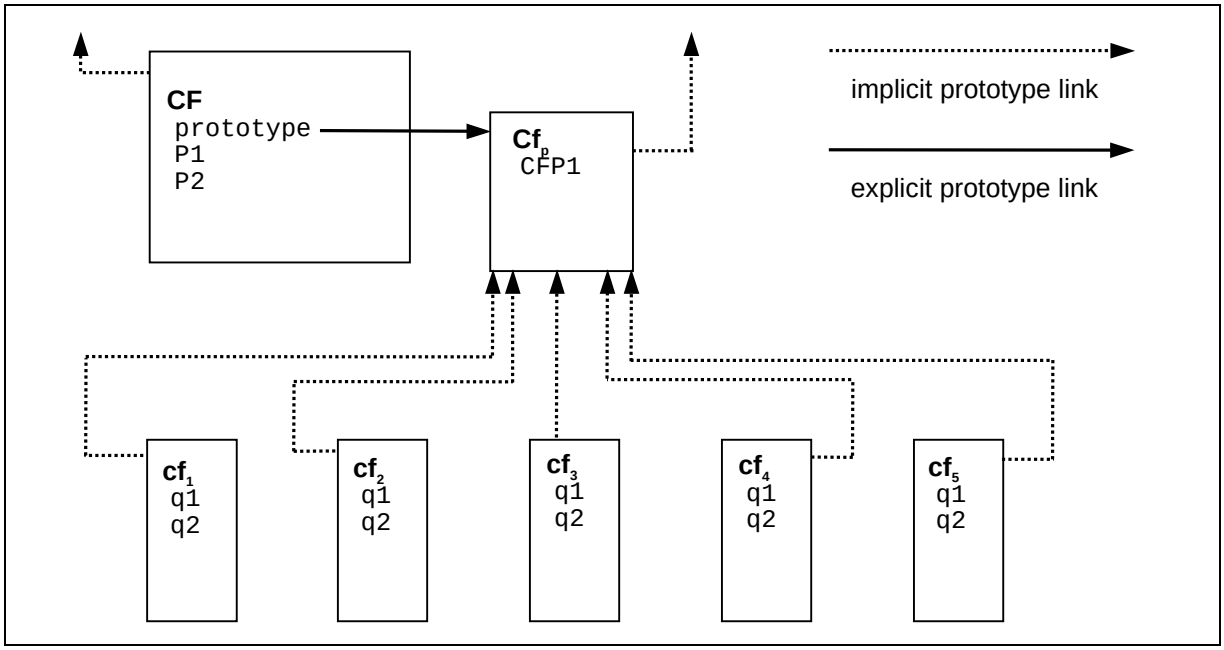

CF is a constructor (and also an object). Five objects have been created by using **new** expressions: cf_1, cf_2, cf_3, cf_4, and cf_5. Each of these objects contains properties named q1 and q2. The dashed lines represent the implicit prototype relationship; so, for example, cf_3's prototype is CF_p. The constructor, CF, has two properties itself, named P1 and P2, which are not visible to CF_p, cf_1, cf_2, cf_3, cf_4, or cf_5. The property named CFP1 in CF_p is shared by cf_1, cf_2, cf_3, cf_4, and cf_5 (but not by CF), as are any properties found in CF_p's implicit prototype chain that are not named q1, q2, or CFP1. Notice that there is no implicit prototype link between CF and CF_p.

Unlike class-based object languages, properties can be added to objects dynamically by assigning values to them. That is, constructors are not required to name or assign values to all or any of the constructed object's properties. In the above diagram, one could add a new shared property for **cf_1**, **cf_2**, **cf_3**, **cf_4**, and **cf_5** by assigning a new value to the property in **CF_p**.

4.3 Terms and Definitions

The following are informal terms and definitions of key terms associated with ECMAScript.

4.3.1 Type

A ***type*** is a set of data values.

4.3.2 Primitive Value

A ***primitive value*** is a member of one of the types **Undefined**, **Null**, **Boolean**, **Number**, or **String**. A primitive value is a datum that is represented directly at the lowest level of the language implementation.

4.3.3 Object

An ***object*** is a member of the type **Object**. It is an unordered collection of properties each of which contains a primitive value, object, or function. A function stored in a property of an object is called a method.

4.3.4 Constructor

A ***constructor*** is a Function object that creates and initialises objects. Each constructor has an associated prototype object that is used to implement inheritance and shared properties.

© ISO/IEC 2002 – All rights reserved
Copyright International Organization for Standardization
Provided by IHS under license with ISO
No reproduction or networking permitted without license from IHS
Not for Resale

4.3.5 Prototype

A ***prototype*** is an object used to implement structure, state, and behaviour inheritance in ECMAScript. When a constructor creates an object, that object implicitly references the constructor's associated prototype for the purpose of resolving property references. The constructor's associated prototype can be referenced by the program expression *constructor*.prototype, and properties added to an object's prototype are shared, through inheritance, by all objects sharing the prototype.

4.3.6 Native Object

A ***native object*** is any object supplied by an ECMAScript implementation independent of the host environment. Standard native objects are defined in this specification. Some native objects are built-in; others may be constructed during the course of execution of an ECMAScript program.

4.3.7 Built-in Object

A ***built-in object*** is any object supplied by an ECMAScript implementation, independent of the host environment, which is present at the start of the execution of an ECMAScript program. Standard built-in objects are defined in this specification, and an ECMAScript implementation may specify and define others. Every built-in object is a native object.

4.3.8 Host Object

A ***host object*** is any object supplied by the host environment to complete the execution environment of ECMAScript. Any object that is not native is a host object.

4.3.9 Undefined Value

The ***undefined value*** is a primitive value used when a variable has not been assigned a value.

4.3.10 Undefined Type

The type **Undefined** has exactly one value, called **undefined**.

4.3.11 Null Value

The ***null value*** is a primitive value that represents the null, empty, or non-existent reference.

4.3.12 Null Type

The type **Null** has exactly one value, called **null**.

4.3.13 Boolean Value

A ***boolean value*** is a member of the type **Boolean** and is one of two unique values, **true** and **false**.

4.3.14 Boolean Type

The type **Boolean** represents a logical entity and consists of exactly two unique values. One is called **true** and the other is called **false**.

4.3.15 Boolean Object

A ***Boolean object*** is a member of the type **Object** and is an instance of the built-in Boolean object. That is, a Boolean object is created by using the Boolean constructor in a **new** expression, supplying a boolean as an argument. The resulting object has an implicit (unnamed) property that is the boolean. A Boolean object can be coerced to a boolean value.

© ISO/IEC 2002 – All rights reserved

Copyright International Organization for Standardization
Provided by IHS under license with ISO
No reproduction or networking permitted without license from IHS
Not for Resale

4.3.16 String Value

A ***string value*** is a member of the type **String** and is a finite ordered sequence of zero or more 16-bit unsigned integer values.

NOTE Although each value usually represents a single 16-bit unit of UTF-16 text, the language does not place any restrictions or requirements on the values except that they be 16-bit unsigned integers.

4.3.17 String Type

The type **String** is the set of all string values.

4.3.18 String Object

A ***String object*** is a member of the type **Object** and is an instance of the built-in String object. That is, a String object is created by using the String constructor in a **`new`** expression, supplying a string as an argument. The resulting object has an implicit (unnamed) property that is the string. A String object can be coerced to a string value by calling the String constructor as a function (section 15.5.1).

4.3.19 Number Value

A ***number value*** is a member of the type **Number** and is a direct representation of a number.

4.3.20 Number Type

The type **Number** is a set of values representing numbers. In ECMAScript, the set of values represents the double-precision 64-bit format IEEE 754 values including the special “Not-a-Number” (NaN) values, positive infinity, and negative infinity.

4.3.21 Number Object

A ***Number object*** is a member of the type **Object** and is an instance of the built-in Number object. That is, a Number object is created by using the Number constructor in a **`new`** expression, supplying a number as an argument. The resulting object has an implicit (unnamed) property that is the number. A Number object can be coerced to a number value by calling the Number constructor as a function (section 15.7.1).

4.3.22 Infinity

The primitive value **Infinity** represents the positive infinite number value. This value is a member of the Number type.

4.3.23 NaN

The primitive value **NaN** represents the set of IEEE Standard “Not-a-Number” values. This value is a member of the Number type.

5 Notational Conventions

5.1 Syntactic and Lexical Grammars

This section describes the context-free grammars used in this specification to define the lexical and syntactic structure of an ECMAScript program.

5.1.1 Context-Free Grammars

A *context-free grammar* consists of a number of *productions*. Each production has an abstract symbol called a *nonterminal* as its *left-hand side*, and a sequence of zero or more nonterminal and *terminal* symbols as its *right-hand side*. For each grammar, the terminal symbols are drawn from a specified alphabet.

© ISO/IEC 2002 – All rights reserved
Copyright International Organization for Standardization
Provided by IHS under license with ISO
No reproduction or networking permitted without license from IHS
Not for Resale

Starting from a sentence consisting of a single distinguished nonterminal, called the *goal symbol*, a given context-free grammar specifies a *language*, namely, the (perhaps infinite) set of possible sequences of terminal symbols that can result from repeatedly replacing any nonterminal in the sequence with a right-hand side of a production for which the nonterminal is the left-hand side.

5.1.2 The Lexical and RegExp Grammars

A *lexical grammar* for ECMAScript is given in section 7. This grammar has as its terminal symbols the characters of the Unicode character set. It defines a set of productions, starting from the goal symbol *InputElementDiv* or *InputElementRegExp*, that describe how sequences of Unicode characters are translated into a sequence of input elements.

Input elements other than white space and comments form the terminal symbols for the syntactic grammar for ECMAScript and are called ECMAScript *tokens*. These tokens are the reserved words, identifiers, literals, and punctuators of the ECMAScript language. Moreover, line terminators, although not considered to be tokens, also become part of the stream of input elements and guide the process of automatic semicolon insertion (section 7.9). Simple white space and single-line comments are discarded and do not appear in the stream of input elements for the syntactic grammar. A *MultiLineComment* (that is, a comment of the form "`/*`…`*/`" regardless of whether it spans more than one line) is likewise simply discarded if it contains no line terminator; but if a *MultiLineComment* contains one or more line terminators, then it is replaced by a single line terminator, which becomes part of the stream of input elements for the syntactic grammar.

A *RegExp grammar* for ECMAScript is given in section 15.10. This grammar also has as its terminal symbols the characters of the Unicode character set. It defines a set of productions, starting from the goal symbol *Pattern*, that describe how sequences of Unicode characters are translated into regular expression patterns.

Productions of the lexical and RegExp grammars are distinguished by having two colons "`::`" as separating punctuation. The lexical and RegExp grammars share some productions.

5.1.3 The Numeric String Grammar

A second grammar is used for translating strings into numeric values. This grammar is similar to the part of the lexical grammar having to do with numeric literals and has as its terminal symbols the characters of the Unicode character set. This grammar appears in section 9.3.1.

Productions of the numeric string grammar are distinguished by having three colons "`:::`" as punctuation.

5.1.4 The Syntactic Grammar

The *syntactic grammar* for ECMAScript is given in sections 11, 12, 13 and 14. This grammar has ECMAScript tokens defined by the lexical grammar as its terminal symbols (section 5.1.2). It defines a set of productions, starting from the goal symbol *Program*, that describe how sequences of tokens can form syntactically correct ECMAScript programs.

When a stream of Unicode characters is to be parsed as an ECMAScript program, it is first converted to a stream of input elements by repeated application of the lexical grammar; this stream of input elements is then parsed by a single application of the syntax grammar. The program is syntactically in error if the tokens in the stream of input elements cannot be parsed as a single instance of the goal nonterminal *Program*, with no tokens left over.

Productions of the syntactic grammar are distinguished by having just one colon "`:`" as punctuation.

The syntactic grammar as presented in sections 11, 12, 13 and 14 is actually not a complete account of which token sequences are accepted as correct ECMAScript programs. Certain additional token sequences are also accepted, namely, those that would be described by the grammar if only semicolons were added to the sequence in certain places (such as before line terminator characters). Furthermore, certain token sequences that are described by the grammar are not considered acceptable if a terminator character appears in certain "awkward" places.

© ISO/IEC 2002 – All rights reserved

Copyright International Organization for Standardization
Provided by IHS under license with ISO
No reproduction or networking permitted without license from IHS
Not for Resale

5.1.5 Grammar Notation

Terminal symbols of the lexical and string grammars, and some of the terminal symbols of the syntactic grammar, are shown in **`fixed width`** font, both in the productions of the grammars and throughout this specification whenever the text directly refers to such a terminal symbol. These are to appear in a program exactly as written. All nonterminal characters specified in this way are to be understood as the appropriate Unicode character from the ASCII range, as opposed to any similar-looking characters from other Unicode ranges.

Nonterminal symbols are shown in *italic* type. The definition of a nonterminal is introduced by the name of the nonterminal being defined followed by one or more colons. (The number of colons indicates to which grammar the production belongs.) One or more alternative right-hand sides for the nonterminal then follow on succeeding lines. For example, the syntactic definition:

WithStatement **:**
`with (` *Expression* **`)`** *Statement*

states that the nonterminal *WithStatement* represents the token **`with`**, followed by a left parenthesis token, followed by an *Expression*, followed by a right parenthesis token, followed by a *Statement*. The occurrences of *Expression* and *Statement* are themselves nonterminals. As another example, the syntactic definition:

ArgumentList **:**
AssignmentExpression
ArgumentList **`,`** *AssignmentExpression*

states that an *ArgumentList* may represent either a single *AssignmentExpression* or an *ArgumentList*, followed by a comma, followed by an *AssignmentExpression*. This definition of *ArgumentList* is *recursive*, that is, it is defined in terms of itself. The result is that an *ArgumentList* may contain any positive number of arguments, separated by commas, where each argument expression is an *AssignmentExpression*. Such recursive definitions of nonterminals are common.

The subscripted suffix "*opt*", which may appear after a terminal or nonterminal, indicates an *optional symbol*. The alternative containing the optional symbol actually specifies two right-hand sides, one that omits the optional element and one that includes it. This means that:

VariableDeclaration **:**
Identifier Initialiser$_{opt}$

is a convenient abbreviation for:

VariableDeclaration **:**
Identifier
Identifier Initialiser

and that:

IterationStatement **:**
`for (` *ExpressionNoIn*$_{opt}$ **`;`** *Expression*$_{opt}$ **`;`** *Expression*$_{opt}$ **`)`** *Statement*

is a convenient abbreviation for:

IterationStatement **:**
`for (` **`;`** *Expression*$_{opt}$ **`;`** *Expression*$_{opt}$ **`)`** *Statement*
`for (` *ExpressionNoIn* **`;`** *Expression*$_{opt}$ **`;`** *Expression*$_{opt}$ **`)`** *Statement*

which in turn is an abbreviation for:

IterationStatement **:**
`for (` **`;`** **`;`** *Expression*$_{opt}$ **`)`** *Statement*
`for (` **`;`** *Expression* **`;`** *Expression*$_{opt}$ **`)`** *Statement*
`for (` *ExpressionNoIn* **`;`** **`;`** *Expression*$_{opt}$ **`)`** *Statement*
`for (` *ExpressionNoIn* **`;`** *Expression* **`;`** *Expression*$_{opt}$ **`)`** *Statement*

--`,,```,,,,````-`-`,,`,,`,`,,`---
Copyright International Organization for Standardization
Provided by IHS under license with ISO
No reproduction or networking permitted without license from IHS
© ISO/IEC 2002 – All rights reserved
Not for Resale

which in turn is an abbreviation for:

IterationStatement **:**
for (; ;) *Statement*
for (; ; *Expression* **)** *Statement*
for (; *Expression* **;)** *Statement*
for (; *Expression* **;** *Expression* **)** *Statement*
for (*ExpressionNoIn* **; ;)** *Statement*
for (*ExpressionNoIn* **; ;** *Expression* **)** *Statement*
for (*ExpressionNoIn* **;** *Expression* **;)** *Statement*
for (*ExpressionNoIn* **;** *Expression* **;** *Expression* **)** *Statement*

so the nonterminal *IterationStatement* actually has eight alternative right-hand sides.

If the phrase "[empty]" appears as the right-hand side of a production, it indicates that the production's right-hand side contains no terminals or nonterminals.

If the phrase "[lookahead ∉ *set*]" appears in the right-hand side of a production, it indicates that the production may not be used if the immediately following input terminal is a member of the given *set*. The *set* can be written as a list of terminals enclosed in curly braces. For convenience, the set can also be written as a nonterminal, in which case it represents the set of all terminals to which that nonterminal could expand. For example, given the definitions

DecimalDigit **:: one of**
0 1 2 3 4 5 6 7 8 9

DecimalDigits **::**
DecimalDigit
DecimalDigits DecimalDigit

the definition

LookaheadExample **::**
n [lookahead ∉ {**1**, **3**, **5**, **7**, **9**}] *DecimalDigits*
DecimalDigit [lookahead ∉ *DecimalDigit*]

matches either the letter **n** followed by one or more decimal digits the first of which is even, or a decimal digit not followed by another decimal digit.

If the phrase "[no *LineTerminator* here]" appears in the right-hand side of a production of the syntactic grammar, it indicates that the production is *a restricted production*: it may not be used if a *LineTerminator* occurs in the input stream at the indicated position. For example, the production:

ReturnStatement **:**
return [no *LineTerminator* here] $Expression_{opt}$ **;**

indicates that the production may not be used if a *LineTerminator* occurs in the program between the **return** token and the *Expression*.

Unless the presence of a *LineTerminator* is forbidden by a restricted production, any number of occurrences of *LineTerminator* may appear between any two consecutive tokens in the stream of input elements without affecting the syntactic acceptability of the program.

When the words "**one of**" follow the colon(s) in a grammar definition, they signify that each of the terminal symbols on the following line or lines is an alternative definition. For example, the lexical grammar for ECMAScript contains the production:

NonZeroDigit **:: one of**
1 2 3 4 5 6 7 8 9

© ISO/IEC 2002 – All rights reserved

Copyright International Organization for Standardization
Provided by IHS under license with ISO
No reproduction or networking permitted without license from IHS
Not for Resale

which is merely a convenient abbreviation for:

NonZeroDigit **:: one of**
1
2
3
4
5
6
7
8
9

When an alternative in a production of the lexical grammar or the numeric string grammar appears to be a multi-character token, it represents the sequence of characters that would make up such a token.

The right-hand side of a production may specify that certain expansions are not permitted by using the phrase "**but not**" and then indicating the expansions to be excluded. For example, the production:

Identifier **::**
IdentifierName **but not** *ReservedWord*

means that the nonterminal *Identifier* may be replaced by any sequence of characters that could replace *IdentifierName* provided that the same sequence of characters could not replace *ReservedWord*.

Finally, a few nonterminal symbols are described by a descriptive phrase in roman type in cases where it would be impractical to list all the alternatives:

SourceCharacter **::**
any Unicode character

5.2 Algorithm Conventions

The specification often uses a numbered list to specify steps in an algorithm. These algorithms are used to clarify semantics. In practice, there may be more efficient algorithms available to implement a given feature.

When an algorithm is to produce a value as a result, the directive "return *x*" is used to indicate that the result of the algorithm is the value of *x* and that the algorithm should terminate. The notation Result(*n*) is used as shorthand for "the result of step *n*". Type(*x*) is used as shorthand for "the type of *x*".

Mathematical operations such as addition, subtraction, negation, multiplication, division, and the mathematical functions defined later in this section should always be understood as computing exact mathematical results on mathematical real numbers, which do not include infinities and do not include a negative zero that is distinguished from positive zero. Algorithms in this standard that model floating-point arithmetic include explicit steps, where necessary, to handle infinities and signed zero and to perform rounding. If a mathematical operation or function is applied to a floating-point number, it should be understood as being applied to the exact mathematical value represented by that floating-point number; such a floating-point number must be finite, and if it is **+0** or **–0** then the corresponding mathematical value is simply 0.

The mathematical function abs(*x*) yields the absolute value of *x*, which is $-x$ if *x* is negative (less than zero) and otherwise is *x* itself.

The mathematical function sign(*x*) yields 1 if *x* is positive and -1 if *x* is negative. The sign function is not used in this standard for cases when *x* is zero.

The notation "*x* modulo *y*" (*y* must be finite and nonzero) computes a value *k* of the same sign as *y* (or zero) such that abs(*k*) < abs(*y*) and $x - k = q \times y$ for some integer *q*.

The mathematical function floor(*x*) yields the largest integer (closest to positive infinity) that is not larger than *x*.

NOTE floor(*x*) = *x*–(*x* modulo 1).

--`,,```,,,,````-`-`,,`,,`,`,,`---

© ISO/IEC 2002 – All rights reserved
Copyright International Organization for Standardization
Provided by IHS under license with ISO
No reproduction or networking permitted without license from IHS
Not for Resale

If an algorithm is defined to “throw an exception”, execution of the algorithm is terminated and no result is returned. The calling algorithms are also terminated, until an algorithm step is reached that explicitly deals with the exception, using terminology such as “If an exception was thrown…”. Once such an algorithm step has been encountered the exception is no longer considered to have occurred.

6 Source Text

ECMAScript source text is represented as a sequence of characters in the Unicode character encoding, version 2.1 or later, using the UTF-16 transformation format. The text is expected to have been normalised to Unicode Normalised Form C (canonical composition), as described in Unicode Technical Report #15. Conforming ECMAScript implementations are not required to perform any normalisation of text, or behave as though they were performing normalisation of text, themselves.

SourceCharacter **::**
any Unicode character

ECMAScript source text can contain any of the Unicode characters. All Unicode white space characters are treated as white space, and all Unicode line/paragraph separators are treated as line separators. Non-Latin Unicode characters are allowed in identifiers, string literals, regular expression literals and comments.

Throughout the rest of this document, the phrase “code point” and the word “character” will be used to refer to a 16-bit unsigned value used to represent a single 16-bit unit of UTF-16 text. The phrase “Unicode character” will be used to refer to the abstract linguistic or typographical unit represented by a single Unicode scalar value (which may be longer than 16 bits and thus may be represented by more than one code point). This only refers to entities represented by single Unicode scalar values: the components of a combining character sequence are still individual “Unicode characters,” even though a user might think of the whole sequence as a single character.

In string literals, regular expression literals and identifiers, any character (code point) may also be expressed as a Unicode escape sequence consisting of six characters, namely **\u** plus four hexadecimal digits. Within a comment, such an escape sequence is effectively ignored as part of the comment. Within a string literal or regular expression literal, the Unicode escape sequence contributes one character to the value of the literal. Within an identifier, the escape sequence contributes one character to the identifier.

NOTE Although this document sometimes refers to a “transformation” between a “character” within a “string” and the 16-bit unsigned integer that is the UTF-16 encoding of that character, there is actually no transformation because a “character” within a “string” is actually represented using that 16-bit unsigned value.

NOTE ECMAScript differs from the Java programming language in the behaviour of Unicode escape sequences. In a Java program, if the Unicode escape sequence **\u000A**, for example, occurs within a single-line comment, it is interpreted as a line terminator (Unicode character **000A** is line feed) and therefore the next character is not part of the comment. Similarly, if the Unicode escape sequence **\u000A** occurs within a string literal in a Java program, it is likewise interpreted as a line terminator, which is not allowed within a string literal—one must write **\n** instead of **\u000A** to cause a line feed to be part of the string value of a string literal. In an ECMAScript program, a Unicode escape sequence occurring within a comment is never interpreted and therefore cannot contribute to termination of the comment. Similarly, a Unicode escape sequence occurring within a string literal in an ECMAScript program always contributes a character to the string value of the literal and is never interpreted as a line terminator or as a quote mark that might terminate the string literal.

7 Lexical Conventions

The source text of an ECMAScript program is first converted into a sequence of input elements, which are either tokens, line terminators, comments, or white space. The source text is scanned from left to right, repeatedly taking the longest possible sequence of characters as the next input element.

There are two goal symbols for the lexical grammar. The *InputElementDiv* symbol is used in those syntactic grammar contexts where a division (**/**) or division-assignment (**/=**) operator is permitted. The *InputElementRegExp* symbol is used in other syntactic grammar contexts.

Note that contexts exist in the syntactic grammar where both a division and a *RegularExpressionLiteral* are permitted by the syntactic grammar; however, since the lexical grammar uses the *InputElementDiv* goal symbol in such cases, the opening slash is not recognised as starting a regular expression literal in such a context. As a workaround, one may enclose the regular expression literal in parentheses.

© ISO/IEC 2002 – All rights reserved

Copyright International Organization for Standardization
Provided by IHS under license with ISO
No reproduction or networking permitted without license from IHS
Not for Resale

Syntax

InputElementDiv **::**
WhiteSpace
LineTerminator
Comment
Token
DivPunctuator

InputElementRegExp **::**
WhiteSpace
LineTerminator
Comment
Token
RegularExpressionLiteral

7.1 Unicode Format-Control Characters

The Unicode format-control characters (i.e., the characters in category "Cf" in the Unicode Character Database such as LEFT-TO-RIGHT MARK or RIGHT-TO-LEFT MARK) are control codes used to control the formatting of a range of text in the absence of higher-level protocols for this (such as mark-up languages). It is useful to allow these in source text to facilitate editing and display.

The format control characters can occur anywhere in the source text of an ECMAScript program. These characters are removed from the source text before applying the lexical grammar. Since these characters are removed before processing string and regular expression literals, one must use a Unicode escape sequence (see section 7.6) to include a Unicode format-control character inside a string or regular expression literal.

7.2 White Space

White space characters are used to improve source text readability and to separate tokens (indivisible lexical units) from each other, but are otherwise insignificant. White space may occur between any two tokens, and may occur within strings (where they are considered significant characters forming part of the literal string value), but cannot appear within any other kind of token.

The following characters are considered to be white space:

Code Point Value	*Name*	*Formal Name*
\u0009	Tab	<TAB>
\u000B	Vertical Tab	<VT>
\u000C	Form Feed	<FF>
\u0020	Space	<SP>
\u00A0	No-break space	<NBSP>
Other category "Zs"	Any other Unicode "space separator"	<USP>

Syntax

WhiteSpace **::**
<TAB>
<VT>
<FF>
<SP>
<NBSP>
<USP>

7.3 Line Terminators

Like white space characters, line terminator characters are used to improve source text readability and to separate tokens (indivisible lexical units) from each other. However, unlike white space characters, line terminators have some influence over the behaviour of the syntactic grammar. In general, line terminators may occur between any

© ISO/IEC 2002 – All rights reserved
Copyright International Organization for Standardization
Provided by IHS under license with ISO
No reproduction or networking permitted without license from IHS
Not for Resale

two tokens, but there are a few places where they are forbidden by the syntactic grammar. A line terminator cannot occur within any token, not even a string. Line terminators also affect the process of automatic semicolon insertion (section 7.9).

The following characters are considered to be line terminators:

Code Point Value	*Name*	*Formal Name*
\u000A	Line Feed	<LF>
\u000D	Carriage Return	<CR>
\u2028	Line separator	<LS>
\u2029	Paragraph separator	<PS>

Syntax

LineTerminator **::**
<LF>
<CR>
<LS>
<PS>

7.4 Comments

Description

Comments can be either single or multi-line. Multi-line comments cannot nest.

Because a single-line comment can contain any character except a *LineTerminator* character, and because of the general rule that a token is always as long as possible, a single-line comment always consists of all characters from the **//** marker to the end of the line. However, the *LineTerminator* at the end of the line is not considered to be part of the single-line comment; it is recognised separately by the lexical grammar and becomes part of the stream of input elements for the syntactic grammar. This point is very important, because it implies that the presence or absence of single-line comments does not affect the process of automatic semicolon insertion (section 7.9).

Comments behave like white space and are discarded except that, if a *MultiLineComment* contains a line terminator character, then the entire comment is considered to be a *LineTerminator* for purposes of parsing by the syntactic grammar.

Syntax

Comment **::**
MultiLineComment
SingleLineComment

MultiLineComment **::**
/* *MultiLineCommentChars*$_{opt}$ ***/**

MultiLineCommentChars **::**
MultiLineNotAsteriskChar MultiLineCommentChars$_{opt}$
***** *PostAsteriskCommentChars*$_{opt}$

PostAsteriskCommentChars **::**
MultiLineNotForwardSlashOrAsteriskChar MultiLineCommentChars$_{opt}$
***** *PostAsteriskCommentChars*$_{opt}$

MultiLineNotAsteriskChar **::**
SourceCharacter **but not** *asterisk* ***

MultiLineNotForwardSlashOrAsteriskChar **::**
SourceCharacter **but not** *forward-slash* **/ or** *asterisk* ***

© ISO/IEC 2002 – All rights reserved

Copyright International Organization for Standardization
Provided by IHS under license with ISO
No reproduction or networking permitted without license from IHS
Not for Resale

SingleLineComment **::**
/ / *SingleLineCommentChars*$_{opt}$

SingleLineCommentChars **::**
SingleLineCommentChar SingleLineCommentChars$_{opt}$

SingleLineCommentChar **::**
SourceCharacter **but not** *LineTerminator*

7.5 Tokens

Syntax

Token **::**
ReservedWord
Identifier
Punctuator
NumericLiteral
StringLiteral

7.5.1 Reserved Words

Description

Reserved words cannot be used as identifiers.

Syntax

ReservedWord **::**
Keyword
FutureReservedWord
NullLiteral
BooleanLiteral

7.5.2 Keywords

The following tokens are ECMAScript keywords and may not be used as identifiers in ECMAScript programs.

Syntax

Keyword **:: one of**

break	**else**	**new**	**var**
case	**finally**	**return**	**void**
catch	**for**	**switch**	**while**
continue	**function**	**this**	**with**
default	**if**	**throw**	
delete	**in**	**try**	
do	**instanceof**	**typeof**	

7.5.3 Future Reserved Words

The following words are used as keywords in proposed extensions and are therefore reserved to allow for the possibility of future adoption of those extensions.

© ISO/IEC 2002 – All rights reserved
Copyright International Organization for Standardization
Provided by IHS under license with ISO
No reproduction or networking permitted without license from IHS
Not for Resale

Syntax

FutureReservedWord **:: one of**

abstract	**enum**	**int**	**short**
boolean	**export**	**interface**	**static**
byte	**extends**	**long**	**super**
char	**final**	**native**	**synchronized**
class	**float**	**package**	**throws**
const	**goto**	**private**	**transient**
debugger	**implements**	**protected**	**volatile**
double	**import**	**public**	

7.6 Identifiers

Description

Identifiers are interpreted according to the grammar given in Section 5.16 of the upcoming version 3.0 of the Unicode standard, with some small modifications. This grammar is based on both normative and informative character categories specified by the Unicode standard. The characters in the specified categories in version 2.1 of the Unicode standard must be treated as in those categories by all conforming ECMAScript implementations; however, conforming ECMAScript implementations may allow additional legal identifier characters based on the category assignment from later versions of Unicode.

This International Standard specifies one departure from the grammar given in the Unicode standard: The dollar sign (**$**) and the underscore (_) are permitted anywhere in an identifier. The dollar sign is intended for use only in mechanically generated code.

Unicode escape sequences are also permitted in identifiers, where they contribute a single character to the identifier, as computed by the CV of the *UnicodeEscapeSequence* (see section 7.8.4). The **** preceding the *UnicodeEscapeSequence* does not contribute a character to the identifier. A *UnicodeEscapeSequence* cannot be used to put a character into an identifier that would otherwise be illegal. In other words, if a **** *UnicodeEscapeSequence* sequence were replaced by its *UnicodeEscapeSequence*'s CV, the result must still be a valid *Identifier* that has the exact same sequence of characters as the original *Identifier*.

Two identifiers that are canonically equivalent according to the Unicode standard are *not* equal unless they are represented by the exact same sequence of code points (in other words, conforming ECMAScript implementations are only required to do bitwise comparison on identifiers). The intent is that the incoming source text has been converted to normalised form C before it reaches the compiler.

Syntax

Identifier **::**
IdentifierName **but not** *ReservedWord*

IdentifierName **::**
IdentifierStart
IdentifierName IdentifierPart

IdentifierStart **::**
UnicodeLetter
$
_
**** *UnicodeEscapeSequence*

IdentifierPart **::**
IdentifierStart
UnicodeCombiningMark
UnicodeDigit
UnicodeConnectorPunctuation
**** *UnicodeEscapeSequence*

© ISO/IEC 2002 – All rights reserved

Copyright International Organization for Standardization
Provided by IHS under license with ISO
No reproduction or networking permitted without license from IHS
Not for Resale

UnicodeLetter
any character in the Unicode categories “Uppercase letter (Lu)”, “Lowercase letter (Ll)”, “Titlecase letter (Lt)”, “Modifier letter (Lm)”, “Other letter (Lo)”, or “Letter number (Nl)”.

UnicodeCombiningMark
any character in the Unicode categories “Non-spacing mark (Mn)” or “Combining spacing mark (Mc)”

UnicodeDigit
any character in the Unicode category “Decimal number (Nd)”

UnicodeConnectorPunctuation
any character in the Unicode category “Connector punctuation (Pc)”

UnicodeEscapeSequence
see section 7.8.4.

HexDigit **:: one of**
`0 1 2 3 4 5 6 7 8 9 a b c d e f A B C D E F`

7.7 Punctuators

Syntax

Punctuator **:: one of**

`{`	`}`	`(`	`)`	`[`	`]`
`.`	`;`	`,`	`<`	`>`	`<=`
`>=`	`==`	`!=`	`===`	`!==`	
`+`	`-`	`*`	`%`	`++`	`--`
`<<`	`>>`	`>>>`	`&`	`|`	`^`
`!`	`~`	`&&`	`||`	`?`	`:`
`=`	`+=`	`-=`	`*=`	`%=`	`<<=`
`>>=`	`>>>=`	`&=`	`|=`	`^=`	

DivPunctuator **:: one of**

`/`	`/=`

7.8 Literals

Syntax

Literal **::**
NullLiteral
BooleanLiteral
NumericLiteral
StringLiteral

7.8.1 Null Literals

Syntax

NullLiteral **::**
`null`

Semantics

The value of the null literal `null` is the sole value of the Null type, namely **null**.

© ISO/IEC 2002 – All rights reserved
Copyright International Organization for Standardization
Provided by IHS under license with ISO
No reproduction or networking permitted without license from IHS
Not for Resale

7.8.2 Boolean Literals

Syntax

BooleanLiteral **::**
`true`
`false`

Semantics

The value of the Boolean literal **`true`** is a value of the Boolean type, namely **true**.

The value of the Boolean literal **`false`** is a value of the Boolean type, namely **false**.

7.8.3 Numeric Literals

Syntax

NumericLiteral **::**
DecimalLiteral
HexIntegerLiteral

DecimalLiteral **::**
DecimalIntegerLiteral **.** *DecimalDigits*$_{opt}$ *ExponentPart*$_{opt}$
. *DecimalDigits ExponentPart*$_{opt}$
DecimalIntegerLiteral ExponentPart$_{opt}$

DecimalIntegerLiteral **::**
0
NonZeroDigit DecimalDigits$_{opt}$

DecimalDigits **::**
DecimalDigit
DecimalDigits DecimalDigit

DecimalDigit **:: one of**
0 1 2 3 4 5 6 7 8 9

NonZeroDigit **:: one of**
1 2 3 4 5 6 7 8 9

ExponentPart **::**
ExponentIndicator SignedInteger

ExponentIndicator **:: one of**
e E

SignedInteger **::**
DecimalDigits
+ *DecimalDigits*
– *DecimalDigits*

HexIntegerLiteral **::**
0x *HexDigit*
0X *HexDigit*
HexIntegerLiteral HexDigit

The source character immediately following a *NumericLiteral* must not be an *IdentifierStart* or *DecimalDigit*.

© ISO/IEC 2002 – All rights reserved

Copyright International Organization for Standardization
Provided by IHS under license with ISO
No reproduction or networking permitted without license from IHS
Not for Resale

NOTE - For example:

```
3in
```

is an error and not the two input elements **3** and **in**.

Semantics

A numeric literal stands for a value of the Number type. This value is determined in two steps: first, a mathematical value (MV) is derived from the literal; second, this mathematical value is rounded as described below.

- The MV of *NumericLiteral* **::** *DecimalLiteral* is the MV of *DecimalLiteral*.
- The MV of *NumericLiteral* **::** *HexIntegerLiteral* is the MV of *HexIntegerLiteral*.
- The MV of *DecimalLiteral* **::** *DecimalIntegerLiteral* **.** is the MV of *DecimalIntegerLiteral*.
- The MV of *DecimalLiteral* **::** *DecimalIntegerLiteral* **.** *DecimalDigits* is the MV of *DecimalIntegerLiteral* plus (the MV of *DecimalDigits* times 10^{-n}), where *n* is the number of characters in *DecimalDigit*s.
- The MV of *DecimalLiteral* **::** *DecimalIntegerLiteral* **.** *ExponentPart* is the MV of *DecimalIntegerLiteral* times 10^{e}, where *e* is the MV of *ExponentPart*.
- The MV of *DecimalLiteral* **::** *DecimalIntegerLiteral* **.** *DecimalDigits ExponentPart* is (the MV of *DecimalIntegerLiteral* plus (the MV of *DecimalDigits* times 10^{-n})) times 10^{e}, where *n* is the number of characters in *DecimalDigit*s and *e* is the MV of *ExponentPart*.
- The MV of *DecimalLiteral* **::** **.** *DecimalDigits* is the MV of *DecimalDigits* times 10^{-n}, where *n* is the number of characters in *DecimalDigit*s.
- The MV of *DecimalLiteral* **::** **.** *DecimalDigits ExponentPart* is the MV of *DecimalDigits* times 10^{e-n}, where *n* is the number of characters in *DecimalDigit*s and *e* is the MV of *ExponentPart*.
- The MV of *DecimalLiteral* **::** *DecimalIntegerLiteral* is the MV of *DecimalIntegerLiteral*.
- The MV of *DecimalLiteral* **::** *DecimalIntegerLiteral ExponentPart* is the MV of *DecimalIntegerLiteral* times 10^{e}, where *e* is the MV of *ExponentPart*.
- The MV of *DecimalIntegerLiteral* **::** **0** is 0.
- The MV of *DecimalIntegerLiteral* **::** *NonZeroDigit DecimalDigits* is (the MV of *NonZeroDigit* times 10^{n}) plus the MV of *DecimalDigits*, where *n* is the number of characters in *DecimalDigits*.
- The MV of *DecimalDigits* **::** *DecimalDigit* is the MV of *DecimalDigit*.
- The MV of *DecimalDigits* **::** *DecimalDigits DecimalDigit* is (the MV of *DecimalDigits* times 10) plus the MV of *DecimalDigit*.
- The MV of *ExponentPart* **::** *ExponentIndicator SignedInteger* is the MV of *SignedInteger*.
- The MV of *SignedInteger* **::** *DecimalDigits* is the MV of *DecimalDigits*.
- The MV of *SignedInteger* **::** **+** *DecimalDigits* is the MV of *DecimalDigits*.
- The MV of *SignedInteger* **::** **–** *DecimalDigits* is the negative of the MV of *DecimalDigits*.
- The MV of *DecimalDigit* **::** **0** or of *HexDigit* **::** **0** is 0.
- The MV of *DecimalDigit* **::** **1** or of *NonZeroDigit* **::** **1** or of *HexDigit* **::** **1** is 1.
- The MV of *DecimalDigit* **::** **2** or of *NonZeroDigit* **::** **2** or of *HexDigit* **::** **2** is 2.
- The MV of *DecimalDigit* **::** **3** or of *NonZeroDigit* **::** **3** or of *HexDigit* **::** **3** is 3.
- The MV of *DecimalDigit* **::** **4** or of *NonZeroDigit* **::** **4** or of *HexDigit* **::** **4** is 4.
- The MV of *DecimalDigit* **::** **5** or of *NonZeroDigit* **::** **5** or of *HexDigit* **::** **5** is 5.
- The MV of *DecimalDigit* **::** **6** or of *NonZeroDigit* **::** **6** or of *HexDigit* **::** **6** is 6.
- The MV of *DecimalDigit* **::** **7** or of *NonZeroDigit* **::** **7** or of *HexDigit* **::** **7** is 7.
- The MV of *DecimalDigit* **::** **8** or of *NonZeroDigit* **::** **8** or of *HexDigit* **::** **8** is 8.
- The MV of *DecimalDigit* **::** **9** or of *NonZeroDigit* **::** **9** or of *HexDigit* **::** **9** is 9.
- The MV of *HexDigit* **::** **a** or of *HexDigit* **::** **A** is 10.
- The MV of *HexDigit* **::** **b** or of *HexDigit* **::** **B** is 11.
- The MV of *HexDigit* **::** **c** or of *HexDigit* **::** **C** is 12.
- The MV of *HexDigit* **::** **d** or of *HexDigit* **::** **D** is 13.
- The MV of *HexDigit* **::** **e** or of *HexDigit* **::** **E** is 14.

© ISO/IEC 2002 – All rights reserved
Copyright International Organization for Standardization
Provided by IHS under license with ISO
No reproduction or networking permitted without license from IHS
Not for Resale

- The MV of *HexDigit* **::** `f` or of *HexDigit* **::** `F` is 15.
- The MV of *HexIntegerLiteral* **::** `0x` *HexDigit* is the MV of *HexDigit*.
- The MV of *HexIntegerLiteral* **::** `0X` *HexDigit* is the MV of *HexDigit*.
- The MV of *HexIntegerLiteral* **::** *HexIntegerLiteral HexDigit* is (the MV of *HexIntegerLiteral* times 16) plus the MV of *HexDigit*.

Once the exact MV for a numeric literal has been determined, it is then rounded to a value of the Number type. If the MV is 0, then the rounded value is **+0**; otherwise, the rounded value must be *the* number value for the MV (in the sense defined in section 8.5), unless the literal is a *DecimalLiteral* and the literal has more than 20 significant digits, in which case the number value may be either the number value for the MV of a literal produced by replacing each significant digit after the 20th with a `0` digit or the number value for the MV of a literal produced by replacing each significant digit after the 20th with a `0` digit and then incrementing the literal at the 20th significant digit position. A digit is *significant* if it is not part of an *ExponentPart* and

- it is not `0`; or
- there is a nonzero digit to its left and there is a nonzero digit, not in the *ExponentPart*, to its right.

7.8.4 String Literals

A string literal is zero or more characters enclosed in single or double quotes. Each character may be represented by an escape sequence.

Syntax

StringLiteral **::**
`"` *DoubleStringCharacters*$_{opt}$ `"`
`'` *SingleStringCharacters*$_{opt}$ `'`

DoubleStringCharacters **::**
DoubleStringCharacter DoubleStringCharacters$_{opt}$

SingleStringCharacters **::**
SingleStringCharacter SingleStringCharacters$_{opt}$

DoubleStringCharacter **::**
SourceCharacter **but not** *double-quote* `"` **or** *backslash* **** **or** *LineTerminator*
**** *EscapeSequence*

SingleStringCharacter **::**
SourceCharacter **but not** *single-quote* `'` **or** *backslash* **** **or** *LineTerminator*
**** *EscapeSequence*

EscapeSequence **::**
CharacterEscapeSequence
0 [lookahead ∉ *DecimalDigit*]
HexEscapeSequence
UnicodeEscapeSequence

CharacterEscapeSequence **::**
SingleEscapeCharacter
NonEscapeCharacter

SingleEscapeCharacter **:: one of**
`' " \ b f n r t v`

NonEscapeCharacter **::**
SourceCharacter **but not** *EscapeCharacter* **or** *LineTerminator*

© ISO/IEC 2002 – All rights reserved

Copyright International Organization for Standardization
Provided by IHS under license with ISO
No reproduction or networking permitted without license from IHS
Not for Resale

EscapeCharacter **::**
SingleEscapeCharacter
DecimalDigit
x
u

HexEscapeSequence **::**
x *HexDigit HexDigit*

UnicodeEscapeSequence **::**
u *HexDigit HexDigit HexDigit HexDigit*

The definitions of the nonterminal *HexDigit* is given in section 7.8.3. *SourceCharacter* is described in sections 2 and 6.

A string literal stands for a value of the String type. The string value (SV) of the literal is described in terms of character values (CV) contributed by the various parts of the string literal. As part of this process, some characters within the string literal are interpreted as having a mathematical value (MV), as described below or in section 7.8.3.

- The SV of *StringLiteral* **::** **""** is the empty character sequence.
- The SV of *StringLiteral* **::** **''** is the empty character sequence.
- The SV of *StringLiteral* **::** **"** *DoubleStringCharacters* **"** is the SV of *DoubleStringCharacters*.
- The SV of *StringLiteral* **::** **'** *SingleStringCharacters* **'** is the SV of *SingleStringCharacters*.
- The SV of *DoubleStringCharacters* **::** *DoubleStringCharacter* is a sequence of one character, the CV of *DoubleStringCharacter*.
- The SV of *DoubleStringCharacters* **::** *DoubleStringCharacter DoubleStringCharacters* is a sequence of the CV of *DoubleStringCharacter* followed by all the characters in the SV of *DoubleStringCharacters* in order.
- The SV of *SingleStringCharacters* **::** *SingleStringCharacter* is a sequence of one character, the CV of *SingleStringCharacter*.
- The SV of *SingleStringCharacters* **::** *SingleStringCharacter SingleStringCharacters* is a sequence of the CV of *SingleStringCharacter* followed by all the characters in the SV of *SingleStringCharacters* in order.
- The CV of *DoubleStringCharacter* **::** *SourceCharacter* **but not** *double-quote* **"** **or** *backslash* **** **or** *LineTerminator* is the *SourceCharacter* character itself.
- The CV of *DoubleStringCharacter* **::** **** *EscapeSequence* is the CV of the *EscapeSequence*.
- The CV of *SingleStringCharacter* **::** *SourceCharacter* **but not** *single-quote* **'** **or** *backslash* **** **or** *LineTerminator* is the *SourceCharacter* character itself.
- The CV of *SingleStringCharacter* **::** **** *EscapeSequence* is the CV of the *EscapeSequence*.
- The CV of *EscapeSequence* **::** *CharacterEscapeSequence* is the CV of the *CharacterEscapeSequence*.
- The CV of *EscapeSequence* **::** **0** [lookahead ∉ *DecimalDigit*]is a <NUL> character (Unicode value 0000).
- The CV of *EscapeSequence* **::** *HexEscapeSequence* is the CV of the *HexEscapeSequence*.
- The CV of *EscapeSequence* **::** *UnicodeEscapeSequence* is the CV of the *UnicodeEscapeSequence*.
- The CV of *CharacterEscapeSequence* **::** *SingleEscapeCharacter* is the character whose code point value is determined by the *SingleEscapeCharacter* according to the following table:

Escape Sequence	*Code Point Value*	*Name*	*Symbol*
\b	**\u0008**	backspace	<BS>
\t	**\u0009**	horizontal tab	<HT>
\n	**\u000A**	line feed (new line)	<LF>
\v	**\u000B**	vertical tab	<VT>
\f	**\u000C**	form feed	<FF>
\r	**\u000D**	carriage return	<CR>
\"	**\u0022**	double quote	"
\'	**\u0027**	single quote	'
****	**\u005C**	backslash	\

© ISO/IEC 2002 – All rights reserved
Copyright International Organization for Standardization
Provided by IHS under license with ISO
No reproduction or networking permitted without license from IHS
Not for Resale

- The CV of *CharacterEscapeSequence* **::** *NonEscapeCharacter* is the CV of the *NonEscapeCharacter*.
- The CV of *NonEscapeCharacter* **::** *SourceCharacter* **but not** *EscapeCharacter* **or** *LineTerminator* is the *SourceCharacter* character itself.
- The CV of *HexEscapeSequence* **::** **`x`** *HexDigit HexDigit* is the character whose code point value is (16 times the MV of the first *HexDigit*) plus the MV of the second *HexDigit*.
- The CV of *UnicodeEscapeSequence* **::** **`u`** *HexDigit HexDigit HexDigit HexDigit* is the character whose code point value is (4096 (that is, 16^3) times the MV of the first *HexDigit*) plus (256 (that is, 16^2) times the MV of the second *HexDigit*) plus (16 times the MV of the third *HexDigit*) plus the MV of the fourth *HexDigit*.

NOTE A *LineTerminator* character cannot appear in a string literal, even if preceded by a backslash **`\`**. The correct way to cause a line terminator character to be part of the string value of a string literal is to use an escape sequence such as **`\n`** or **`\u000A`**.

7.8.5 Regular Expression Literals

A regular expression literal is an input element that is converted to a RegExp object (section 15.10) when it is scanned. The object is created before evaluation of the containing program or function begins. Evaluation of the literal produces a reference to that object; it does not create a new object. Two regular expression literals in a program evaluate to regular expression objects that never compare as **`===`** to each other even if the two literals' contents are identical. A RegExp object may also be created at runtime by **`new RegExp`** (section 15.10.4) or calling the **`RegExp`** constructor as a function (section 15.10.3).

The productions below describe the syntax for a regular expression literal and are used by the input element scanner to find the end of the regular expression literal. The strings of characters comprising the *RegularExpressionBody* and the *RegularExpressionFlags* are passed uninterpreted to the regular expression constructor, which interprets them according to its own, more stringent grammar. An implementation may extend the regular expression constructor's grammar, but it should not extend the *RegularExpressionBody* and *RegularExpressionFlags* productions or the productions used by these productions.

Syntax

RegularExpressionLiteral **::**
`/` *RegularExpressionBody* **`/`** *RegularExpressionFlags*

RegularExpressionBody **::**
RegularExpressionFirstChar RegularExpressionChars

RegularExpressionChars **::**
[empty]
RegularExpressionChars RegularExpressionChar

RegularExpressionFirstChar **::**
NonTerminator **but not `*` or `\` or `/`**
BackslashSequence

RegularExpressionChar **::**
NonTerminator **but not `\` or `/`**
BackslashSequence

BackslashSequence **::**
`\` *NonTerminator*

NonTerminator **::**
SourceCharacter **but not** *LineTerminator*

RegularExpressionFlags **::**
[empty]
RegularExpressionFlags IdentifierPart

NOTE Regular expression literals may not be empty; instead of representing an empty regular expression literal, the characters **`//`** start a single-line comment. To specify an empty regular expression, use **`/(?:)/`**.

--`,,```,,,,````-`-`,,`,,`,`,,`---
© ISO/IEC 2002 – All rights reserved
Copyright International Organization for Standardization
Provided by IHS under license with ISO
No reproduction or networking permitted without license from IHS
Not for Resale

Semantics

A regular expression literal stands for a value of the Object type. This value is determined in two steps: first, the characters comprising the regular expression's *RegularExpressionBody* and *RegularExpressionFlags* production expansions are collected uninterpreted into two strings Pattern and Flags, respectively. Then the **`new RegExp`** constructor is called with two arguments Pattern and Flags and the result becomes the value of the *RegularExpressionLiteral*. If the call to **`new RegExp`** generates an error, an implementation may, at its discretion, either report the error immediately while scanning the program, or it may defer the error until the regular expression literal is evaluated in the course of program execution.

7.9 Automatic Semicolon Insertion

Certain ECMAScript statements (empty statement, variable statement, expression statement, **`do`**-**`while`** statement, **`continue`** statement, **`break`** statement, **`return`** statement, and **`throw`** statement) must be terminated with semicolons. Such semicolons may always appear explicitly in the source text. For convenience, however, such semicolons may be omitted from the source text in certain situations. These situations are described by saying that semicolons are automatically inserted into the source code token stream in those situations.

7.9.1 Rules of Automatic Semicolon Insertion

- When, as the program is parsed from left to right, a token (called the *offending token*) is encountered that is not allowed by any production of the grammar, then a semicolon is automatically inserted before the offending token if one or more of the following conditions is true:
    1. The offending token is separated from the previous token by at least one *LineTerminator*.
    2. The offending token is **`}`**.

- When, as the program is parsed from left to right, the end of the input stream of tokens is encountered and the parser is unable to parse the input token stream as a single complete ECMAScript *Program*, then a semicolon is automatically inserted at the end of the input stream.

- When, as the program is parsed from left to right, a token is encountered that is allowed by some production of the grammar, but the production is a *restricted production* and the token would be the first token for a terminal or nonterminal immediately following the annotation "[no *LineTerminator* here]" within the restricted production (and therefore such a token is called a restricted token), and the restricted token is separated from the previous token by at least one *LineTerminator*, then a semicolon is automatically inserted before the restricted token.

However, there is an additional overriding condition on the preceding rules: a semicolon is never inserted automatically if the semicolon would then be parsed as an empty statement or if that semicolon would become one of the two semicolons in the header of a **`for`** statement (section 12.6.3).

NOTE These are the only restricted productions in the grammar:

PostfixExpression **:**
LeftHandSideExpression [no *LineTerminator* here] **`++`**
LeftHandSideExpression [no *LineTerminator* here] **`--`**

ContinueStatement **:**
`continue` [no *LineTerminator* here] *Identifier*$_{opt}$ **`;`**

BreakStatement **:**
`break` [no *LineTerminator* here] *Identifier*$_{opt}$ **`;`**

ReturnStatement **:**
`return` [no *LineTerminator* here] *Expression*$_{opt}$ **`;`**

ThrowStatement **:**
`throw` [no *LineTerminator* here] *Expression* **`;`**

--`,,```,,,,````-`-`,,`,,`,`,,`---

© ISO/IEC 2002 – All rights reserved
Copyright International Organization for Standardization
Provided by IHS under license with ISO
No reproduction or networking permitted without license from IHS
Not for Resale

The practical effect of these restricted productions is as follows:

- When a **++** or **--** token is encountered where the parser would treat it as a postfix operator, and at least one *LineTerminator* occurred between the preceding token and the **++** or **--** token, then a semicolon is automatically inserted before the **++** or **--** token.
- When a **continue**, **break**, **return**, or **throw** token is encountered and a *LineTerminator* is encountered before the next token, a semicolon is automatically inserted after the **continue**, **break**, **return**, or **throw** token.

The resulting practical advice to ECMAScript programmers is:

- A postfix **++** or **--** operator should appear on the same line as its operand.
- An *Expression* in a **return** or **throw** statement should start on the same line as the **return** or **throw** token.
- A label in a **break** or **continue** statement should be on the same line as the **break** or **continue** token.

7.9.2 Examples of Automatic Semicolon Insertion

The source

```
{ 1 2 } 3
```

is not a valid sentence in the ECMAScript grammar, even with the automatic semicolon insertion rules. In contrast, the source

```
{ 1
2 } 3
```

is also not a valid ECMAScript sentence, but is transformed by automatic semicolon insertion into the following:

```
{ 1
;2 ;} 3;
```

which is a valid ECMAScript sentence.

The source

```
for (a; b
)
```

is not a valid ECMAScript sentence and is not altered by automatic semicolon insertion because the semicolon is needed for the header of a **for** statement. Automatic semicolon insertion never inserts one of the two semicolons in the header of a **for** statement.

The source

```
return
a + b
```

is transformed by automatic semicolon insertion into the following:

```
return;
a + b;
```

NOTE The expression **a + b** is not treated as a value to be returned by the **return** statement, because a *LineTerminator* separates it from the token **return**.

The source

```
a = b
++c
```

© ISO/IEC 2002 – All rights reserved

Copyright International Organization for Standardization
Provided by IHS under license with ISO
No reproduction or networking permitted without license from IHS
Not for Resale

is transformed by automatic semicolon insertion into the following:

```
a = b;
++c;
```

NOTE The token **++** is not treated as a postfix operator applying to the variable **b**, because a *LineTerminator* occurs between **b** and **++**.

The source

```
if (a > b)
else c = d
```

is not a valid ECMAScript sentence and is not altered by automatic semicolon insertion before the **else** token, even though no production of the grammar applies at that point, because an automatically inserted semicolon would then be parsed as an empty statement.

The source

```
a = b + c
(d + e).print()
```

is *not* transformed by automatic semicolon insertion, because the parenthesised expression that begins the second line can be interpreted as an argument list for a function call:

```
a = b + c(d + e).print()
```

In the circumstance that an assignment statement must begin with a left parenthesis, it is a good idea for the programmer to provide an explicit semicolon at the end of the preceding statement rather than to rely on automatic semicolon insertion.

8 Types

A value is an entity that takes on one of nine types. There are nine types (Undefined, Null, Boolean, String, Number, Object, Reference, List, and Completion**)**. Values of type Reference, List, and Completion are used only as intermediate results of expression evaluation and cannot be stored as properties of objects.

8.1 The Undefined Type

The Undefined type has exactly one value, called **undefined***.* Any variable that has not been assigned a value has the value **undefined**.

8.2 The Null Type

The Null type has exactly one value, called **null**.

8.3 The Boolean Type

The Boolean type represents a logical entity having two values, called **true** and **false**.

8.4 The String Type

The String type is the set of all finite ordered sequences of zero or more 16-bit unsigned integer values (“elements”). The String type is generally used to represent textual data in a running ECMAScript program, in which case each element in the string is treated as a code point value (see section 6). Each element is regarded as occupying a position within the sequence. These positions are indexed with nonnegative integers. The first element (if any) is at position 0, the next element (if any) at position 1, and so on. The length of a string is the number of elements (i.e., 16-bit values) within it. The empty string has length zero and therefore contains no elements.

© ISO/IEC 2002 – All rights reserved
Copyright International Organization for Standardization
Provided by IHS under license with ISO
No reproduction or networking permitted without license from IHS
Not for Resale

When a string contains actual textual data, each element is considered to be a single UTF-16 unit. Whether or not this is the actual storage format of a String, the characters within a String are numbered as though they were represented using UTF-16. All operations on Strings (except as otherwise stated) treat them as sequences of undifferentiated 16-bit unsigned integers; they do not ensure the resulting string is in normalised form, nor do they ensure language-sensitive results.

NOTE The rationale behind these decisions was to keep the implementation of Strings as simple and high-performing as possible. The intent is that textual data coming into the execution environment from outside (e.g., user input, text read from a file or received over the network, etc.) be converted to Unicode Normalised Form C before the running program sees it. Usually this would occur at the same time incoming text is converted from its original character encoding to Unicode (and would impose no additional overhead). Since it is recommended that ECMAScript source code be in Normalised Form C, string literals are guaranteed to be normalised (if source text is guaranteed to be normalised), as long as they do not contain any Unicode escape sequences.

8.5 The Number Type

The Number type has exactly 18437736874454810627 (that is, $2^{64}-2^{53}+3$) values, representing the double-precision 64-bit format IEEE 754 values as specified in the IEEE Standard for Binary Floating-Point Arithmetic, except that the 9007199254740990 (that is, $2^{53}-2$) distinct "Not-a-Number" values of the IEEE Standard are represented in ECMAScript as a single special **NaN** value. (Note that the **NaN** value is produced by the program expression `NaN`, assuming that the globally defined variable `NaN` has not been altered by program execution.) In some implementations, external code might be able to detect a difference between various Non-a-Number values, but such behaviour is implementation-dependent; to ECMAScript code, all NaN values are indistinguishable from each other.

There are two other special values, called **positive Infinity** and **negative Infinity**. For brevity, these values are also referred to for expository purposes by the symbols **+∞** and **–∞**, respectively. (Note that these two infinite number values are produced by the program expressions `+Infinity` (or simply `Infinity`) and `-Infinity`, assuming that the globally defined variable `Infinity` has not been altered by program execution.)

The other 18437736874454810624 (that is, $2^{64}-2^{53}$) values are called the finite numbers. Half of these are positive numbers and half are negative numbers; for every finite positive number there is a corresponding negative number having the same magnitude.

Note that there is both a **positive zero** and a **negative zero**. For brevity, these values are also referred to for expository purposes by the symbols **+0** and **–0**, respectively. (Note that these two zero number values are produced by the program expressions `+0` (or simply `0`) and `-0`.)

The 18437736874454810622 (that is, $2^{64}-2^{53}-2$) finite nonzero values are of two kinds:

18428729675200069632 (that is, $2^{64}-2^{54}$) of them are normalised, having the form

$$s \times m \times 2^e$$

where s is +1 or −1, m is a positive integer less than 2^{53} but not less than 2^{52}, and e is an integer ranging from −1074 to 971, inclusive.

The remaining 9007199254740990 (that is, $2^{53}-2$) values are denormalised, having the form

$$s \times m \times 2^e$$

where s is +1 or −1, m is a positive integer less than 2^{52}, and e is −1074.

Note that all the positive and negative integers whose magnitude is no greater than 2^{53} are representable in the Number type (indeed, the integer 0 has two representations, `+0` and `-0`).

A finite number has an *odd significand* if it is nonzero and the integer m used to express it (in one of the two forms shown above) is odd. Otherwise, it has an *even significand*.

--`,,```,,,,````-`-`,,`,,`,`,,`---

© ISO/IEC 2002 – All rights reserved

Copyright International Organization for Standardization
Provided by IHS under license with ISO
No reproduction or networking permitted without license from IHS
Not for Resale

In this specification, the phrase "the number value for *x*" where *x* represents an exact nonzero real mathematical quantity (which might even be an irrational number such as π) means a number value chosen in the following manner. Consider the set of all finite values of the Number type, with **–0** removed and with two additional values added to it that are not representable in the Number type, namely 2^{1024} (which is $+1 \times 2^{53} \times 2^{971}$) and -2^{1024} (which is $-1 \times 2^{53} \times 2^{971}$). Choose the member of this set that is closest in value to *x*. If two values of the set are equally close, then the one with an even significand is chosen; for this purpose, the two extra values 2^{1024} and -2^{1024} are considered to have even significands. Finally, if 2^{1024} was chosen, replace it with **+∞**; if -2^{1024} was chosen, replace it with **–∞**; if **+0** was chosen, replace it with **–0** if and only if *x* is less than zero; any other chosen value is used unchanged. The result is the number value for *x*. (This procedure corresponds exactly to the behaviour of the IEEE 754 "round to nearest" mode.)

Some ECMAScript operators deal only with integers in the range -2^{31} through $2^{31}-1$, inclusive, or in the range 0 through $2^{32}-1$, inclusive. These operators accept any value of the Number type but first convert each such value to one of 2^{32} integer values. See the descriptions of the ToInt32 and ToUint32 operators in sections 9.5 and 9.6, respectively.

8.6 The Object Type

An Object is an unordered collection of properties. Each property consists of a name, a value and a set of attributes.

8.6.1 Property Attributes

A property can have zero or more attributes from the following set:

Attribute	*Description*
ReadOnly	The property is a read-only property. Attempts by ECMAScript code to write to the property will be ignored. (Note, however, that in some cases the value of a property with the ReadOnly attribute may change over time because of actions taken by the host environment; therefore "ReadOnly" does not mean "constant and unchanging"!)
DontEnum	The property is not to be enumerated by a **`for-in`** enumeration (section 12.6.4).
DontDelete	Attempts to delete the property will be ignored. See the description of the **`delete`** operator in section 11.4.1.
Internal	Internal properties have no name and are not directly accessible via the property accessor operators. How these properties are accessed is implementation specific. How and when some of these properties are used is specified by the language specification.

8.6.2 Internal Properties and Methods

Internal properties and methods are not part of the language. They are defined by this specification purely for expository purposes. An implementation of ECMAScript must behave as if it produced and operated upon internal properties in the manner described here. For the purposes of this document, the names of internal properties are enclosed in double square brackets [[ ]]. When an algorithm uses an internal property of an object and the object does not implement the indicated internal property, a **TypeError** exception is thrown.

There are two types of access for normal (non-internal) properties: *get* and *put*, corresponding to retrieval and assignment, respectively.

Native ECMAScript objects have an internal property called [[Prototype]]. The value of this property is either **`null`** or an object and is used for implementing inheritance. Properties of the [[Prototype]] object are visible as properties of the child object for the purposes of get access, but not for put access.

The following table summarises the internal properties used by this specification. The description indicates their behaviour for native ECMAScript objects. Host objects may implement these internal methods with any implementation-dependent behaviour, or it may be that a host object implements only some internal methods and not others.

© ISO/IEC 2002 – All rights reserved
Copyright International Organization for Standardization
Provided by IHS under license with ISO
No reproduction or networking permitted without license from IHS
Not for Resale

Property	*Parameters*	*Description*
[[Prototype]]	none	The prototype of this object.
[[Class]]	none	A string value indicating the kind of this object.
[[Value]]	none	Internal state information associated with this object.
[[Get]]	(*PropertyName*)	Returns the value of the property.
[[Put]]	(*PropertyName*, *Value*)	Sets the specified property to *Value*.
[[CanPut]]	(*PropertyName*)	Returns a boolean value indicating whether a [[Put]] operation with *PropertyName* will succeed.
[[HasProperty]]	(*PropertyName*)	Returns a boolean value indicating whether the object already has a member with the given name.
[[Delete]]	(*PropertyName*)	Removes the specified property from the object.
[[DefaultValue]]	(*Hint*)	Returns a default value for the object, which should be a primitive value (not an object or reference).
[[Construct]]	a list of argument values provided by the caller	Constructs an object. Invoked via the **`new`** operator. Objects that implement this internal method are called *constructors*.
[[Call]]	a list of argument values provided by the caller	Executes code associated with the object. Invoked via a function call expression. Objects that implement this internal method are called *functions*.
[[HasInstance]]	(*Value*)	Returns a boolean value indicating whether *Value* delegates behaviour to this object. Of the native ECMAScript objects, only Function objects implement [[HasInstance]].
[[Scope]]	none	A scope chain that defines the environment in which a Function object is executed.
[[Match]]	(*String*, *Index*)	Tests for a regular expression match and returns a MatchResult value (see section 15.10.2.1).

Every object (including host objects) must implement the [[Prototype]] and [[Class]] properties and the [[Get]], [[Put]], [[CanPut]], [[HasProperty]], [[Delete]], and [[DefaultValue]] methods. (Note, however, that the [[DefaultValue]] method may, for some objects, simply throw a **TypeError** exception.)

The value of the [[Prototype]] property must be either an object or **null**, and every [[Prototype]] chain must have finite length (that is, starting from any object, recursively accessing the [[Prototype]] property must eventually lead to a **null** value). Whether or not a native object can have a host object as its [[Prototype]] depends on the implementation.

The value of the [[Class]] property is defined by this specification for every kind of built-in object. The value of the [[Class]] property of a host object may be any value, even a value used by a built-in object for its [[Class]] property. The value of a [[Class]] property is used internally to distinguish different kinds of built-in objects. Note that this specification does not provide any means for a program to access that value except through **`Object.prototype.toString`** (see section 15.2.4.2).

For native objects the [[Get]], [[Put]], [[CanPut]], [[HasProperty]], [[Delete]] and [[DefaultValue]] methods behave as described in described in sections 8.6.2.1, 8.6.2.2, 8.6.2.3, 8.6.2.4, 8.6.2.5 and 8.6.2.6, respectively, except that Array objects have a slightly different implementation of the [[Put]] method (section 15.4.5.1). Host objects may implement these methods in any manner unless specified otherwise; for example, one possibility is that [[Get]] and [[Put]] for a particular host object indeed fetch and store property values but [[HasProperty]] always generates **false**.

In the following algorithm descriptions, assume *O* is a native ECMAScript object and *P* is a string.

© ISO/IEC 2002 – All rights reserved

Copyright International Organization for Standardization
Provided by IHS under license with ISO
No reproduction or networking permitted without license from IHS
Not for Resale

8.6.2.1 [[Get]] (P)

When the [[Get]] method of *O* is called with property name *P*, the following steps are taken:

1. If *O* doesn't have a property with name *P*, go to step 4.
2. Get the value of the property.
3. Return Result(2).
4. If the [[Prototype]] of *O* is **null**, return **undefined**.
5. Call the [[Get]] method of [[Prototype]] with property name *P*.
6. Return Result(5).

8.6.2.2 [[Put]] (P, V)

When the [[Put]] method of *O* is called with property *P* and value *V*, the following steps are taken:

1. Call the [[CanPut]] method of *O* with name *P*.
2. If Result(1) is **false**, return.
3. If *O* doesn't have a property with name *P*, go to step 6.
4. Set the value of the property to *V*. The attributes of the property are not changed.
5. Return.
6. Create a property with name *P*, set its value to *V* and give it empty attributes.
7. Return.

Note, however, that if *O* is an Array object, it has a more elaborate [[Put]] method (section 15.4.5.1).

8.6.2.3 [[CanPut]] (P)

The [[CanPut]] method is used only by the [[Put]] method.

When the [[CanPut]] method of *O* is called with property *P*, the following steps are taken:

1. If *O* doesn't have a property with name *P*, go to step 4.
2. If the property has the ReadOnly attribute, return **false**.
3. Return **true**.
4. If the [[Prototype]] of *O* is **null**, return **true**.
5. Call the [[CanPut]] method of [[Prototype]] of *O* with property name *P*.
6. Return Result(5).

8.6.2.4 [[HasProperty]] (P)

When the [[HasProperty]] method of *O* is called with property name *P*, the following steps are taken:

1. If *O* has a property with name *P*, return **true**.
2. If the [[Prototype]] of *O* is **null**, return **false**.
3. Call the [[HasProperty]] method of [[Prototype]] with property name *P*.
4. Return Result(3).

8.6.2.5 [[Delete]] (P)

When the [[Delete]] method of *O* is called with property name *P*, the following steps are taken:

1. If *O* doesn't have a property with name *P*, return **true**.
2. If the property has the DontDelete attribute, return **false**.
3. Remove the property with name *P* from *O*.
4. Return **true**.

--`,,```,,,,````-`-`,,`,,`,`,,`---

© ISO/IEC 2002 – All rights reserved
Copyright International Organization for Standardization
Provided by IHS under license with ISO
No reproduction or networking permitted without license from IHS
Not for Resale

8.6.2.6 [[DefaultValue]] (hint)

When the [[DefaultValue]] method of *O* is called with hint String, the following steps are taken:

1. Call the [[Get]] method of object *O* with argument "**`toString`**".
2. If Result(1) is not an object, go to step 5.
3. Call the [[Call]] method of Result(1), with *O* as the **this** value and an empty argument list.
4. If Result(3) is a primitive value, return Result(3).
5. Call the [[Get]] method of object *O* with argument "**`valueOf`**".
6. If Result(5) is not an object, go to step 9.
7. Call the [[Call]] method of Result(5), with *O* as the **this** value and an empty argument list.
8. If Result(7) is a primitive value, return Result(7).
9. Throw a **TypeError** exception.

When the [[DefaultValue]] method of *O* is called with hint Number, the following steps are taken:

1. Call the [[Get]] method of object *O* with argument **`"valueOf"`**.
2. If Result(1) is not an object, go to step 5.
3. Call the [[Call]] method of Result(1), with *O* as the **this** value and an empty argument list.
4. If Result(3) is a primitive value, return Result(3).
5. Call the [[Get]] method of object *O* with argument **`"toString"`**.
6. If Result(5) is not an object, go to step 9.
7. Call the [[Call]] method of Result(5), with *O* as the **this** value and an empty argument list.
8. If Result(7) is a primitive value, return Result(7).
9. Throw a **TypeError** exception.

When the [[DefaultValue]] method of *O* is called with no hint, then it behaves as if the hint were Number, unless *O* is a Date object (section 15.9), in which case it behaves as if the hint were String.

The above specification of [[DefaultValue]] for native objects can return only primitive values. If a host object implements its own [[DefaultValue]] method, it must ensure that its [[DefaultValue]] method can return only primitive values.

8.7 The Reference Type

The internal Reference type is not a language data type. It is defined by this specification purely for expository purposes. An implementation of ECMAScript must behave as if it produced and operated upon references in the manner described here. However, a value of type **Reference** is used only as an intermediate result of expression evaluation and cannot be stored as the value of a variable or property.

The Reference type is used to explain the behaviour of such operators as **`delete`**, **`typeof`**, and the assignment operators. For example, the left-hand operand of an assignment is expected to produce a reference. The behaviour of assignment could, instead, be explained entirely in terms of a case analysis on the syntactic form of the left-hand operand of an assignment operator, but for one difficulty: function calls are permitted to return references. This possibility is admitted purely for the sake of host objects. No built-in ECMAScript function defined by this specification returns a reference and there is no provision for a user-defined function to return a reference. (Another reason not to use a syntactic case analysis is that it would be lengthy and awkward, affecting many parts of the specification.)

Another use of the Reference type is to explain the determination of the **this** value for a function call.

A **Reference** is a reference to a property of an object. A Reference consists of two components, the *base object* and the *property name.*

The following abstract operations are used in this specification to access the components of references:

- GetBase(V). Returns the base object component of the reference V.
- GetPropertyName(V). Returns the property name component of the reference V.

© ISO/IEC 2002 – All rights reserved

Copyright International Organization for Standardization
Provided by IHS under license with ISO
No reproduction or networking permitted without license from IHS
Not for Resale

The following abstract operations are used in this specification to operate on references:

8.7.1 GetValue (V)

1. If Type(*V*) is not Reference, return *V*.
2. Call GetBase(*V*).
3. If Result(2) is **null**, throw a **ReferenceError** exception.
4. Call the [[Get]] method of Result(2), passing GetPropertyName(*V*) for the property name.
5. Return Result(4).

8.7.2 PutValue (V, W)

1. If Type(*V*) is not Reference, throw a **ReferenceError** exception.
2. Call GetBase(*V*).
3. If Result(2) is **null**, go to step 6.
4. Call the [[Put]] method of Result(2), passing GetPropertyName(*V*) for the property name and W for the value.
5. Return.
6. Call the [[Put]] method for the global object, passing GetPropertyName(*V*) for the property name and W for the value.
7. Return.

8.8 The List Type

The internal List type is not a language data type. It is defined by this specification purely for expository purposes. An implementation of ECMAScript must behave as if it produced and operated upon List values in the manner described here. However, a value of the List type is used only as an intermediate result of expression evaluation and cannot be stored as the value of a variable or property.

The List type is used to explain the evaluation of argument lists (section 11.2.4) in **`new`** expressions and in function calls. Values of the List type are simply ordered sequences of values. These sequences may be of any length.

8.9 The Completion Type

The internal Completion type is not a language data type. It is defined by this specification purely for expository purposes. An implementation of ECMAScript must behave as if it produced and operated upon Completion values in the manner described here. However, a value of the Completion type is used only as an intermediate result of statement evaluation and cannot be stored as the value of a variable or property.

The Completion type is used to explain the behaviour of statements (**`break`**, **`continue`**, **`return`** and **`throw`**) that perform nonlocal transfers of control. Values of the Completion type are triples of the form (*type*, *value*, *target*), where *type* is one of **normal**, **break**, **continue**, **return**, or **throw**, *value* is any ECMAScript value or **empty**, and *target* is any ECMAScript identifier or **empty**.

The term “abrupt completion” refers to any completion with a type other than **normal**.

9 Type Conversion

The ECMAScript runtime system performs automatic type conversion as needed. To clarify the semantics of certain constructs it is useful to define a set of conversion operators. These operators are not a part of the language; they are defined here to aid the specification of the semantics of the language. The conversion operators are polymorphic; that is, they can accept a value of any standard type, but not of type Reference, List, or Completion (the internal types).

9.1 ToPrimitive

The operator ToPrimitive takes a Value argument and an optional argument *PreferredType*. The operator ToPrimitive converts its value argument to a non-Object type. If an object is capable of converting to more than one primitive type, it may use the optional hint *PreferredType* to favour that type. Conversion occurs according to the following table:

--`,,```,,,,````-`-`,,`,,`,`,,`---
© ISO/IEC 2002 – All rights reserved
Copyright International Organization for Standardization
Provided by IHS under license with ISO
No reproduction or networking permitted without license from IHS
Not for Resale

Input Type	*Result*
Undefined	The result equals the input argument (no conversion).
Null	The result equals the input argument (no conversion).
Boolean	The result equals the input argument (no conversion).
Number	The result equals the input argument (no conversion).
String	The result equals the input argument (no conversion).
Object	Return a default value for the Object. The default value of an object is retrieved by calling the internal [[DefaultValue]] method of the object, passing the optional hint *PreferredType*. The behaviour of the [[DefaultValue]] method is defined by this specification for all native ECMAScript objects (section 8.6.2.6).

9.2 ToBoolean

The operator ToBoolean converts its argument to a value of type Boolean according to the following table:

Input Type	*Result*
Undefined	**false**
Null	**false**
Boolean	The result equals the input argument (no conversion).
Number	The result is **false** if the argument is **+0**, **–0**, or **NaN**; otherwise the result is **true**.
String	The result is **false** if the argument is the empty string (its length is zero); otherwise the result is **true**.
Object	**true**

9.3 ToNumber

The operator ToNumber converts its argument to a value of type Number according to the following table:

Input Type	*Result*
Undefined	**NaN**
Null	**+0**
Boolean	The result is **1** if the argument is **true**. The result is **+0** if the argument is **false**.
Number	The result equals the input argument (no conversion).
String	See grammar and note below.
Object	Apply the following steps: 1. Call ToPrimitive(input argument, hint Number). 2. Call ToNumber(Result(1)). 3. Return Result(2).

9.3.1 ToNumber Applied to the String Type

ToNumber applied to strings applies the following grammar to the input string. If the grammar cannot interpret the string as an expansion of *StringNumericLiteral*, then the result of ToNumber is **NaN**.

StringNumericLiteral **:::**
StrWhiteSpace$_{opt}$
StrWhiteSpace$_{opt}$ *StrNumericLiteral StrWhiteSpace*$_{opt}$

StrWhiteSpace **:::**
StrWhiteSpaceChar StrWhiteSpace$_{opt}$

--`,,```,,,,````-`-`,,`,,`,`,,`---

© ISO/IEC 2002 – All rights reserved

Copyright International Organization for Standardization
Provided by IHS under license with ISO
No reproduction or networking permitted without license from IHS
Not for Resale

StrWhiteSpaceChar **:::**
<TAB>
<SP>
<NBSP>
<FF>
<VT>
<CR>
<LF>
<LS>
<PS>
<USP>

StrNumericLiteral **:::**
StrDecimalLiteral
HexIntegerLiteral

StrDecimalLiteral **:::**
StrUnsignedDecimalLiteral
+ *StrUnsignedDecimalLiteral*
– *StrUnsignedDecimalLiteral*

StrUnsignedDecimalLiteral **:::**
`Infinity`
DecimalDigits **.** $DecimalDigits_{opt}$ $ExponentPart_{opt}$
. *DecimalDigits* $ExponentPart_{opt}$
DecimalDigits $ExponentPart_{opt}$

DecimalDigits **:::**
DecimalDigit
DecimalDigits DecimalDigit

DecimalDigit **::: one of**
`0 1 2 3 4 5 6 7 8 9`

ExponentPart **:::**
ExponentIndicator SignedInteger

ExponentIndicator **::: one of**
`e E`

SignedInteger **:::**
DecimalDigits
+ *DecimalDigits*
– *DecimalDigits*

HexIntegerLiteral **:::**
`0x` *HexDigit*
`0X` *HexDigit*
HexIntegerLiteral HexDigit

HexDigit **::: one of**
`0 1 2 3 4 5 6 7 8 9 a b c d e f A B C D E F`

Some differences should be noted between the syntax of a *StringNumericLiteral* and a *NumericLiteral* (section 7.8.3):

- A *StringNumericLiteral* may be preceded and/or followed by white space and/or line terminators.
- A *StringNumericLiteral* that is decimal may have any number of leading **`0`** digits.
- A *StringNumericLiteral* that is decimal may be preceded by **+** or **–** to indicate its sign.
- A *StringNumericLiteral* that is empty or contains only white space is converted to **+0**.

--`,,```,,,,````-`-`,,`,,`,`,,`---

© ISO/IEC 2002 – All rights reserved
Copyright International Organization for Standardization
Provided by IHS under license with ISO
No reproduction or networking permitted without license from IHS
Not for Resale

The conversion of a string to a number value is similar overall to the determination of the number value for a numeric literal (section 7.8.3), but some of the details are different, so the process for converting a string numeric literal to a value of Number type is given here in full. This value is determined in two steps: first, a mathematical value (MV) is derived from the string numeric literal; second, this mathematical value is rounded as described below.

- The MV of *StringNumericLiteral* **:::** [empty] is 0.
- The MV of *StringNumericLiteral* **:::** *StrWhiteSpace* is 0.
- The MV of *StringNumericLiteral* **:::** $StrWhiteSpace_{opt}$ *StrNumericLiteral* $StrWhiteSpace_{opt}$ is the MV of *StrNumericLiteral*, no matter whether white space is present or not.
- The MV of *StrNumericLiteral* **:::** *StrDecimalLiteral* is the MV of *StrDecimalLiteral.*
- The MV of *StrNumericLiteral* **:::** *HexIntegerLiteral* is the MV of *HexIntegerLiteral*.
- The MV of *StrDecimalLiteral* **:::** *StrUnsignedDecimalLiteral* is the MV of *StrUnsignedDecimalLiteral*.
- The MV of *StrDecimalLiteral***:::** **+** *StrUnsignedDecimalLiteral* is the MV of *StrUnsignedDecimalLiteral*.
- The MV of *StrDecimalLiteral***:::** **–** *StrUnsignedDecimalLiteral* is the negative of the MV of *StrUnsignedDecimalLiteral*. (Note that if the MV of *StrUnsignedDecimalLiteral* is 0, the negative of this MV is also 0. The rounding rule described below handles the conversion of this sign less mathematical zero to a floating-point **+0** or **–0** as appropriate.)
- The MV of *StrUnsignedDecimalLiteral***:::** **`Infinity`** is 10^{10000} (a value so large that it will round to **+∞**).
- The MV of *StrUnsignedDecimalLiteral***:::** *DecimalDigits* **.** is the MV of *DecimalDigits*.
- The MV of *StrUnsignedDecimalLiteral***:::** *DecimalDigits* **.** *DecimalDigits* is the MV of the first *DecimalDigits* plus (the MV of the second *DecimalDigits* times 10^{-n}), where *n* is the number of characters in the second *DecimalDigit*s.
- The MV of *StrUnsignedDecimalLiteral***:::** *DecimalDigits* **.** *ExponentPart* is the MV of *DecimalDigits* times 10^{e}, where *e* is the MV of *ExponentPart*.
- The MV of *StrUnsignedDecimalLiteral***:::** *DecimalDigits* **.** *DecimalDigits ExponentPart* is (the MV of the first *DecimalDigits* plus (the MV of the second *DecimalDigits* times 10^{-n})) times 10^{e}, where *n* is the number of characters in the second *DecimalDigit*s and *e* is the MV of *ExponentPart*.
- The MV of *StrUnsignedDecimalLiteral***:::** **.** *DecimalDigits* is the MV of *DecimalDigits* times 10^{-n}, where *n* is the number of characters in *DecimalDigit*s.
- The MV of *StrUnsignedDecimalLiteral***:::** **.** *DecimalDigits ExponentPart* is the MV of *DecimalDigits* times 10^{e-n}, where *n* is the number of characters in *DecimalDigit*s and *e* is the MV of *ExponentPart*.
- The MV of *StrUnsignedDecimalLiteral***:::** *DecimalDigits* is the MV of *DecimalDigits*.
- The MV of *StrUnsignedDecimalLiteral***:::** *DecimalDigits ExponentPart* is the MV of *DecimalDigits* times 10^{e}, where *e* is the MV of *ExponentPart*.
- The MV of *DecimalDigits* **:::** *DecimalDigit* is the MV of *DecimalDigit*.
- The MV of *DecimalDigits* **:::** *DecimalDigits DecimalDigit* is (the MV of *DecimalDigits* times 10) plus the MV of *DecimalDigit*.
- The MV of *ExponentPart* **:::** *ExponentIndicator SignedInteger* is the MV of *SignedInteger*.
- The MV of *SignedInteger* **:::** *DecimalDigits* is the MV of *DecimalDigits*.
- The MV of *SignedInteger* **:::** **+** *DecimalDigits* is the MV of *DecimalDigits*.
- The MV of *SignedInteger* **:::** **–** *DecimalDigits* is the negative of the MV of *DecimalDigits*.
- The MV of *DecimalDigit* **:::** **`0`** or of *HexDigit* **:::** **`0`** is 0.
- The MV of *DecimalDigit* **:::** **`1`** or of *HexDigit* **:::** **`1`** is 1.
- The MV of *DecimalDigit* **:::** **`2`** or of *HexDigit* **:::** **`2`** is 2.
- The MV of *DecimalDigit* **:::** **`3`** or of *HexDigit* **:::** **`3`** is 3.
- The MV of *DecimalDigit* **:::** **`4`** or of *HexDigit* **:::** **`4`** is 4.
- The MV of *DecimalDigit* **:::** **`5`** or of *HexDigit* **:::** **`5`** is 5.
- The MV of *DecimalDigit* **:::** **`6`** or of *HexDigit* **:::** **`6`** is 6.
- The MV of *DecimalDigit* **:::** **`7`** or of *HexDigit* **:::** **`7`** is 7.
- The MV of *DecimalDigit* **:::** **`8`** or of *HexDigit* **:::** **`8`** is 8.
- The MV of *DecimalDigit* **:::** **`9`** or of *HexDigit* **:::** **`9`** is 9.
- The MV of *HexDigit* **:::** **`a`** or of *HexDigit* **:::** **`A`** is 10.

--`,,```,,,,````-`-`,,`,,`,`,,`---

© ISO/IEC 2002 – All rights reserved

Copyright International Organization for Standardization
Provided by IHS under license with ISO
No reproduction or networking permitted without license from IHS
Not for Resale

- The MV of *HexDigit* **:::** `b` or of *HexDigit* **:::** `B` is 11.
- The MV of *HexDigit* **:::** `c` or of *HexDigit* **:::** `C` is 12.
- The MV of *HexDigit* **:::** `d` or of *HexDigit* **:::** `D` is 13.
- The MV of *HexDigit* **:::** `e` or of *HexDigit* **:::** `E` is 14.
- The MV of *HexDigit* **:::** `f` or of *HexDigit* **:::** `F` is 15.
- The MV of *HexIntegerLiteral* **:::** `0x` *HexDigit* is the MV of *HexDigit*.
- The MV of *HexIntegerLiteral* **:::** `0X` *HexDigit* is the MV of *HexDigit*.
- The MV of *HexIntegerLiteral* **:::** *HexIntegerLiteral HexDigit* is (the MV of *HexIntegerLiteral* times 16) plus the MV of *HexDigit*.

Once the exact MV for a string numeric literal has been determined, it is then rounded to a value of the Number type. If the MV is 0, then the rounded value is +0 unless the first non white space character in the string numeric literal is '**–**', in which case the rounded value is –0. Otherwise, the rounded value must be the number value for the MV (in the sense defined in section 8.5), unless the literal includes a *StrUnsignedDecimalLiteral* and the literal has more than 20 significant digits, in which case the number value may be either the number value for the MV of a literal produced by replacing each significant digit after the 20th with a 0 digit or the number value for the MV of a literal produced by replacing each significant digit after the 20th with a 0 digit and then incrementing the literal at the 20th digit position. A digit is *significant* if it is not part of an *ExponentPart* and

- it is not `0`; or
- there is a nonzero digit to its left and there is a nonzero digit, not in the *ExponentPart*, to its right.

9.4 ToInteger

The operator ToInteger converts its argument to an integral numeric value. This operator functions as follows:

1. Call ToNumber on the input argument.
2. If Result(1) is **NaN**, return **+0**.
3. If Result(1) is **+0**, **–0**, **+∞,** or **–∞**, return Result(1).
4. Compute sign(Result(1)) * floor(abs(Result(1))).
5. Return Result(4).

9.5 ToInt32: (Signed 32 Bit Integer)

The operator ToInt32 converts its argument to one of 2^{32} integer values in the range -2^{31} through $2^{31}-1$, inclusive. This operator functions as follows:

1. Call ToNumber on the input argument.
2. If Result(1) is **NaN**, **+0**, **–0**, **+∞**, or **–∞**, return +0.
3. Compute sign(Result(1)) * floor(abs(Result(1))).
4. Compute Result(3) modulo 2^{32}; that is, a finite integer value k of Number type with positive sign and less than 2^{32} in magnitude such the mathematical difference of Result(3) and k is mathematically an integer multiple of 2^{32}.
5. If Result(4) is greater than or equal to 2^{31}, return Result(4)-2^{32}, otherwise return Result(4).

NOTE Given the above definition of ToInt32:

The ToInt32 operation is idempotent: if applied to a result that it produced, the second application leaves that value unchanged.

ToInt32(ToUint32(*x*)) is equal to ToInt32(*x*) for all values of *x*. (It is to preserve this latter property that +∞ and –∞ are mapped to +0.)

ToInt32 maps –0 to +0.

© ISO/IEC 2002 – All rights reserved
Copyright International Organization for Standardization
Provided by IHS under license with ISO
No reproduction or networking permitted without license from IHS
Not for Resale

9.6 ToUint32: (Unsigned 32 Bit Integer)

The operator ToUint32 converts its argument to one of 2^{32} integer values in the range 0 through $2^{32}-1$, inclusive. This operator functions as follows:

1. Call ToNumber on the input argument.
2. If Result(1) is **NaN**, +0, −0, +∞, or −∞, return +0.
3. Compute sign(Result(1)) * floor(abs(Result(1))).
4. Compute Result(3) modulo 2^{32}; that is, a finite integer value k of Number type with positive sign and less than 2^{32} in magnitude such the mathematical difference of Result(3) and k is mathematically an integer multiple of 2^{32}.
5. Return Result(4).

NOTE Given the above definition of ToUInt32:

Step 5 is the only difference between ToUint32 and ToInt32.

The ToUint32 operation is idempotent: if applied to a result that it produced, the second application leaves that value unchanged.

ToUint32(ToInt32(*x*)) is equal to ToUint32(*x*) for all values of *x*. (It is to preserve this latter property that +∞ and −∞ are mapped to +0.)

ToUint32 maps −0 to +0.

9.7 ToUint16: (Unsigned 16 Bit Integer)

The operator ToUint16 converts its argument to one of 2^{16} integer values in the range 0 through $2^{16}-1$, inclusive. This operator functions as follows:

1. Call ToNumber on the input argument.
2. If Result(1) is **NaN**, +0, −0, +∞, or −∞, return +0.
3. Compute sign(Result(1)) * floor(abs(Result(1))).
4. Compute Result(3) modulo 2^{16}; that is, a finite integer value *k* of Number type with positive sign and less than 2^{16} in magnitude such the mathematical difference of Result(3) and *k* is mathematically an integer multiple of 2^{16}.
5. Return Result(4).

NOTE Given the above definition of ToUint16:

The substitution of 2^{16} for 2^{32} in step 4 is the only difference between ToUint32 and ToUint16.

ToUint16 maps −0 to +0.

9.8 ToString

The operator ToString converts its argument to a value of type String according to the following table:

Input Type	***Result***
Undefined	**`"undefined"`**
Null	**`"null"`**
Boolean	If the argument is **true**, then the result is **`"true"`**. If the argument is **false**, then the result is **`"false"`**.
Number	See note below.
String	Return the input argument (no conversion)
Object	Apply the following steps: Call ToPrimitive(input argument, hint String). Call ToString(Result(1)). Return Result(2).

© ISO/IEC 2002 – All rights reserved

Copyright International Organization for Standardization
Provided by IHS under license with ISO
No reproduction or networking permitted without license from IHS
Not for Resale

9.8.1 ToString Applied to the Number Type

The operator ToString converts a number *m* to string format as follows:

1. If *m* is **NaN**, return the string **"NaN"**.
2. If *m* is **+0** or **–0**, return the string **"0"**.
3. If *m* is less than zero, return the string concatenation of the string **"-"** and ToString(–*m*).
4. If *m* is infinity, return the string **"Infinity"**.
5. Otherwise, let *n*, *k*, and *s* be integers such that $k \geq 1$, $10^{k-1} \leq s < 10^k$, the number value for $s \times 10^{n-k}$ is *m*, and *k* is as small as possible. Note that *k* is the number of digits in the decimal representation of *s*, that *s* is not divisible by 10, and that the least significant digit of *s* is not necessarily uniquely determined by these criteria.
6. If $k \leq n \leq 21$, return the string consisting of the *k* digits of the decimal representation of s (in order, with no leading zeroes), followed by *n*–*k* occurrences of the character '**0**'.
7. If $0 < n \leq 21$, return the string consisting of the most significant *n* digits of the decimal representation of *s*, followed by a decimal point '**.**', followed by the remaining *k*–*n* digits of the decimal representation of *s*.
8. If $-6 < n \leq 0$, return the string consisting of the character '**0**', followed by a decimal point '**.**', followed by –*n* occurrences of the character '**0**', followed by the *k* digits of the decimal representation of *s*.
9. Otherwise, if $k = 1$, return the string consisting of the single digit of *s*, followed by lowercase character '**e**', followed by a plus sign '**+**' or minus sign '**–**' according to whether *n*–1 is positive or negative, followed by the decimal representation of the integer abs(*n*–1) (with no leading zeros).
10. Return the string consisting of the most significant digit of the decimal representation of s, followed by a decimal point '.', followed by the remaining k–1 digits of the decimal representation of s, followed by the lowercase character 'e', followed by a plus sign '+' or minus sign '–' according to whether n–1 is positive or negative, followed by the decimal representation of the integer abs(n–1) (with no leading zeros).

NOTE The following observations may be useful as guidelines for implementations, but are not part of the normative requirements of this standard.

If *x* is any number value other than **–0**, then ToNumber(ToString(*x*)) is exactly the same number value as *x*.

The least significant digit of *s* is not always uniquely determined by the requirements listed in step 5.

For implementations that provide more accurate conversions than required by the rules above, it is recommended that the following alternative version of step 5 be used as a guideline:

> Otherwise, let *n*, *k*, and *s* be integers such that $k \geq 1$, $10^{k-1} \leq s < 10^k$, the number value for $s \times 10^{n-k}$ is *m*, and *k* is as small as possible. If there are multiple possibilities for *s*, choose the value of *s* for which $s \times 10^{n-k}$ is closest in value to *m*. If there are two such possible values of *s*, choose the one that is even. Note that *k* is the number of digits in the decimal representation of *s* and that *s* is not divisible by 10.

Implementors of ECMAScript may find useful the paper and code written by David M. Gay for binary-to-decimal conversion of floating-point numbers:

> Gay, David M. Correctly Rounded Binary-Decimal and Decimal-Binary Conversions. Numerical Analysis Manuscript 90-10. AT&T Bell Laboratories (Murray Hill, New Jersey). November 30, 1990. Available as **http://cm.bell-labs.com/cm/cs/doc/90/4-10.ps.gz**. Associated code available as **http://cm.bell-labs.com/netlib/fp/dtoa.c.gz** and as **http://cm.bell-labs.com/netlib/fp/g_fmt.c.gz** and may also be found at the various **netlib** mirror sites.

--`,,```,,,,````-`-`,,`,,`,`,,`---
© ISO/IEC 2002 – All rights reserved
Copyright International Organization for Standardization
Provided by IHS under license with ISO
No reproduction or networking permitted without license from IHS
Not for Resale

9.9 ToObject

The operator ToObject converts its argument to a value of type Object according to the following table:

Input Type	*Result*
Undefined	Throw a **TypeError** exception.
Null	Throw a **TypeError** exception.
Boolean	Create a new Boolean object whose [[value]] property is set to the value of the boolean. See section 15.6 for a description of Boolean objects.
Number	Create a new Number object whose [[value]] property is set to the value of the number. See section 15.7 for a description of Number objects.
String	Create a new String object whose [[value]] property is set to the value of the string. See section 15.5 for a description of String objects.
Object	The result is the input argument (no conversion).

10 Execution Contexts

When control is transferred to ECMAScript executable code, control is entering an *execution context*. Active execution contexts logically form a stack. The top execution context on this logical stack is the running execution context.

10.1 Definitions

10.1.1 Function Objects

There are two types of Function objects:

- Program functions are defined in source text by a *FunctionDeclaration* or created dynamically either by using a *FunctionExpression* or by using the built-in **`Function`** object as a constructor.

- Internal functions are built-in objects of the language, such as **`parseInt`** and **`Math.exp`**. An implementation may also provide implementation-dependent internal functions that are not described in this specification. These functions do not contain executable code defined by the ECMAScript grammar, so they are excluded from this discussion of execution contexts.

10.1.2 Types of Executable Code

There are three types of ECMAScript executable code:

- *Global code* is source text that is treated as an ECMAScript *Program*. The global code of a particular *Program* does not include any source text that is parsed as part of a *FunctionBody*.

- *Eval code* is the source text supplied to the built-in **`eval`** function. More precisely, if the parameter to the built-in **`eval`** function is a string, it is treated as an ECMAScript *Program*. The eval code for a particular invocation of **`eval`** is the global code portion of the string parameter.

- *Function code* is source text that is parsed as part of a *FunctionBody*. The *function code* of a particular *FunctionBody* does not include any source text that is parsed as part of a nested *FunctionBody*. *Function code* also denotes the source text supplied when using the built-in **`Function`** object as a constructor. More precisely, the last parameter provided to the **`Function`** constructor is converted to a string and treated as the *FunctionBody*. If more than one parameter is provided to the **`Function`** constructor, all parameters except the last one are converted to strings and concatenated together, separated by commas. The resulting string is interpreted as the *FormalParameterList* for the *FunctionBody* defined by the last parameter. The *function code* for a particular instantiation of a **`Function`** does not include any source text that is parsed as part of a nested *FunctionBody*.

© ISO/IEC 2002 – All rights reserved

Copyright International Organization for Standardization
Provided by IHS under license with ISO
No reproduction or networking permitted without license from IHS
Not for Resale

10.1.3 Variable Instantiation

Every execution context has associated with it a variable object. Variables and functions declared in the source text are added as properties of the variable object. For function code, parameters are added as properties of the variable object.

Which object is used as the variable object and what attributes are used for the properties depends on the type of code, but the remainder of the behaviour is generic. On entering an execution context, the properties are bound to the variable object in the following order:

- For function code: for each formal parameter, as defined in the *FormalParameterList*, create a property of the variable object whose name is the *Identifier* and whose attributes are determined by the type of code. The values of the parameters are supplied by the caller as arguments to [[Call]]. If the caller supplies fewer parameter values than there are formal parameters, the extra formal parameters have value **undefined**. If two or more formal parameters share the same name, hence the same property, the corresponding property is given the value that was supplied for the last parameter with this name. If the value of this last parameter was not supplied by the caller, the value of the corresponding property is **undefined**.

- For each *FunctionDeclaration* in the code, in source text order, create a property of the variable object whose name is the *Identifier* in the *FunctionDeclaration*, whose value is the result returned by creating a Function object as described in section 13, and whose attributes are determined by the type of code. If the variable object already has a property with this name, replace its value and attributes. Semantically, this step must follow the creation of *FormalParameterList* properties.

- For each *VariableDeclaration* or *VariableDeclarationNoIn* in the code, create a property of the variable object whose name is the *Identifier* in the *VariableDeclaration* or *VariableDeclarationNoIn*, whose value is **undefined** and whose attributes are determined by the type of code. If there is already a property of the variable object with the name of a declared variable, the value of the property and its attributes are not changed. Semantically, this step must follow the creation of the *FormalParameterList* and *FunctionDeclaration* properties. In particular, if a declared variable has the same name as a declared function or formal parameter, the variable declaration does not disturb the existing property.

10.1.4 Scope Chain and Identifier Resolution

Every execution context has associated with it a scope chain. A scope chain is a list of objects that are searched when evaluating an *Identifier*. When control enters an execution context, a scope chain is created and populated with an initial set of objects, depending on the type of code. During execution within an execution context, the scope chain of the execution context is affected only by **`with`** statements (section 12.10) and **`catch`** clauses (section 12.14).

During execution, the syntactic production *PrimaryExpression* : *Identifier* is evaluated using the following algorithm:

1. Get the next object in the scope chain. If there isn't one, go to step 5.
2. Call the [[HasProperty]] method of Result(1), passing the *Identifier* as the property.
3. If Result(2) is **true**, return a value of type Reference whose base object is Result(1) and whose property name is the *Identifier*.
4. Go to step 1.
5. Return a value of type Reference whose base object is **`null`** and whose property name is the *Identifier*.

The result of evaluating an identifier is always a value of type Reference with its member name component equal to the identifier string.

10.1.5 Global Object

There is a unique *global object* (section 15.1), which is created before control enters any execution context. Initially the global object has the following properties:

- Built-in objects such as Math, String, Date, parseInt, etc. These have attributes { DontEnum }.
- Additional host defined properties. This may include a property whose value is the global object itself; for example, in the HTML document object model the **`window`** property of the global object is the global object itself.

--`,,```,,,,````-`-`,,`,,`,`,,`---
© ISO/IEC 2002 – All rights reserved
Copyright International Organization for Standardization
Provided by IHS under license with ISO
No reproduction or networking permitted without license from IHS
Not for Resale

As control enters execution contexts, and as ECMAScript code is executed, additional properties may be added to the global object and the initial properties may be changed.

10.1.6 Activation Object

When control enters an execution context for function code, an object called the activation object is created and associated with the execution context. The activation object is initialised with a property with name **`arguments`** and attributes { DontDelete }. The initial value of this property is the arguments object described below.

The activation object is then used as the variable object for the purposes of variable instantiation.

The activation object is purely a specification mechanism. It is impossible for an ECMAScript program to access the activation object. It can access members of the activation object, but not the activation object itself. When the call operation is applied to a Reference value whose base object is an activation object, **`null`** is used as the **this** value of the call.

10.1.7 This

There is a **this** value associated with every active execution context. The **this** value depends on the caller and the type of code being executed and is determined when control enters the execution context. The **this** value associated with an execution context is immutable.

10.1.8 Arguments Object

When control enters an execution context for function code, an arguments object is created and initialised as follows:

- The value of the internal [[Prototype]] property of the arguments object is the original Object prototype object, the one that is the initial value of **`Object.prototype`** (section 15.2.3.1).
- A property is created with name **`callee`** and property attributes { DontEnum }. The initial value of this property is the Function object being executed. This allows anonymous functions to be recursive.
- A property is created with name **`length`** and property attributes { DontEnum }. The initial value of this property is the number of actual parameter values supplied by the caller.
- For each non-negative integer, *arg*, less than the value of the **`length`** property, a property is created with name ToString(*arg*) and property attributes { DontEnum }. The initial value of this property is the value of the corresponding actual parameter supplied by the caller. The first actual parameter value corresponds to *arg* = 0, the second to *arg* = 1, and so on. In the case when *arg* is less than the number of formal parameters for the Function object, this property shares its value with the corresponding property of the activation object. This means that changing this property changes the corresponding property of the activation object and vice versa.

10.2 Entering An Execution Context

Every function and constructor call enters a new execution context, even if a function is calling itself recursively. Every return exits an execution context. A thrown exception, if not caught, may also exit one or more execution contexts.

When control enters an execution context, the scope chain is created and initialised, variable instantiation is performed, and the **this** value is determined.

The initialisation of the scope chain, variable instantiation, and the determination of the **this** value depend on the type of code being entered.

10.2.1 Global Code

- The scope chain is created and initialised to contain the global object and no others.
- Variable instantiation is performed using the global object as the variable object and using property attributes { DontDelete }.
- The **this** value is the global object.

--`,,```,,,,````-`-`,,`,,`,`,,`---

© ISO/IEC 2002 – All rights reserved

Copyright International Organization for Standardization
Provided by IHS under license with ISO
No reproduction or networking permitted without license from IHS
Not for Resale

10.2.2 Eval Code

When control enters an execution context for eval code, the previous active execution context, referred to as the *calling context*, is used to determine the scope chain, the variable object, and the **this** value. If there is no calling context, then initialising the scope chain, variable instantiation, and determination of the **this** value are performed just as for global code.

- The scope chain is initialised to contain the same objects, in the same order, as the calling context's scope chain. This includes objects added to the calling context's scope chain by **`with`** statements and **`catch`** clauses.
- Variable instantiation is performed using the calling context's variable object and using empty property attributes.
- The **this** value is the same as the **this** value of the calling context.

10.2.3 Function Code

- The scope chain is initialised to contain the activation object followed by the objects in the scope chain stored in the [[Scope]] property of the Function object.
- Variable instantiation is performed using the activation object as the variable object and using property attributes { DontDelete }.
- The caller provides the **this** value. If the **this** value provided by the caller is not an object (including the case where it is **`null`**), then the **this** value is the global object.

11 Expressions

11.1 Primary Expressions

Syntax

PrimaryExpression **:**
`this`
Identifier
Literal
ArrayLiteral
ObjectLiteral
`(` *Expression* **`)`**

11.1.1 The `this` Keyword

The **`this`** keyword evaluates to the **this** value of the execution context.

11.1.2 Identifier Reference

An *Identifier* is evaluated using the scoping rules stated in section 10.1.4. The result of evaluating an *Identifier* is always a value of type Reference.

11.1.3 Literal Reference

A *Literal* is evaluated as described in section 7.8.

11.1.4 Array Initialiser

An array initialiser is an expression describing the initialisation of an Array object, written in a form of a literal. It is a list of zero or more expressions, each of which represents an array element, enclosed in square brackets. The elements need not be literals; they are evaluated each time the array initialiser is evaluated.

Array elements may be elided at the beginning, middle or end of the element list. Whenever a comma in the element list is not preceded by an *AssignmentExpression* (i.e., a comma at the beginning or after another comma), the missing array element contributes to the length of the Array and increases the index of subsequent elements. Elided array elements are not defined.

© ISO/IEC 2002 – All rights reserved
Copyright International Organization for Standardization
Provided by IHS under license with ISO
No reproduction or networking permitted without license from IHS
Not for Resale

Syntax

ArrayLiteral **:**
[*Elision*$_{opt}$ **]**
[*ElementList* **]**
[*ElementList* **,** *Elision*$_{opt}$ **]**

ElementList **:**
Elision$_{opt}$ *AssignmentExpression*
ElementList **,** *Elision*$_{opt}$ *AssignmentExpression*

Elision **:**
,
Elision **,**

Semantics

The production *ArrayLiteral* **: [** *Elision*$_{opt}$ **]** is evaluated as follows:

1. Create a new array as if by the expression **`new Array()`**.
2. Evaluate *Elision*; if not present, use the numeric value zero.
3. Call the [[Put]] method of Result(1) with arguments **`"length"`** and Result(2).
4. Return Result(1).

The production *ArrayLiteral* **: [** *ElementList* **]** is evaluated as follows:

1. Evaluate *ElementList*.
2. Return Result(1).

The production *ArrayLiteral* **: [** *ElementList* **,** *Elision*$_{opt}$ **]** is evaluated as follows:

1. Evaluate *ElementList*.
2. Evaluate *Elision*; if not present, use the numeric value zero.
3. Call the [[Get]] method of Result(1) with argument **`"length"`**.
4. Call the [[Put]] method of Result(1) with arguments **`"length"`** and (Result(2)+Result(3)).
5. Return Result(1).

The production *ElementList* **:** *Elision*$_{opt}$ *AssignmentExpression* is evaluated as follows:

1. Create a new array as if by the expression **`new Array()`**.
2. Evaluate *Elision*; if not present, use the numeric value zero.
3. Evaluate *AssignmentExpression*.
4. Call GetValue(Result(3)).
5. Call the [[Put]] method of Result(1) with arguments Result(2) and Result(4).
6. Return Result(1)

The production *ElementList* **:** *ElementList* **,** *Elision*$_{opt}$ *AssignmentExpression* is evaluated as follows:

1. Evaluate *ElementList*.
2. Evaluate *Elision*; if not present, use the numeric value zero.
3. Evaluate *AssignmentExpression*.
4. Call GetValue(Result(3)).
5. Call the [[Get]] method of Result(1) with argument **`"length"`**.
6. Call the [[Put]] method of Result(1) with arguments (Result(2)+Result(5)) and Result(4).
7. Return Result(1)

The production *Elision* **: ,** is *evaluated* as follows:

1. Return the numeric value **1**.

© ISO/IEC 2002 – All rights reserved

Copyright International Organization for Standardization
Provided by IHS under license with ISO
No reproduction or networking permitted without license from IHS
Not for Resale

The production *Elision* **:** *Elision* **,** is evaluated as follows:

Evaluate *Elision*.
2. Return (Result(1)+1).

11.1.5 Object Initialiser

An object initialiser is an expression describing the initialisation of an Object, written in a form resembling a literal. It is a list of zero or more pairs of property names and associated values, enclosed in curly braces. The values need not be literals; they are evaluated each time the object initialiser is evaluated.

Syntax

ObjectLiteral **:**
{ }
{ *PropertyNameAndValueList* **}**

PropertyNameAndValueList **:**
PropertyName **:** *AssignmentExpression*
PropertyNameAndValueList **,** *PropertyName* **:** *AssignmentExpression*

PropertyName **:**
Identifier
StringLiteral
NumericLiteral

Semantics

The production *ObjectLiteral* **: { }** is evaluated as follows:

1. Create a new object as if by the expression **new Object()**.
2. Return Result(1).

The production *ObjectLiteral* **: {** *PropertyNameAndValueList* **}** is evaluated as follows:

1. Evaluate *PropertyNameAndValueList*.
2. Return Result(1);

The production
PropertyNameAndValueList **:** *PropertyName* **:** *AssignmentExpression*
is evaluated as follows:

1. Create a new object as if by the expression **new Object()**.
2. Evaluate *PropertyName*.
3. Evaluate *AssignmentExpression*.
4. Call GetValue(Result(3)).
5. Call the [[Put]] method of Result(1) with arguments Result(2) and Result(4).
6. Return Result(1).

The production
PropertyNameAndValueList **:** *PropertyNameAndValueList* **,** *PropertyName* **:** *AssignmentExpression*
is evaluated as follows:

1. Evaluate *PropertyNameAndValueList*.
2. Evaluate *PropertyName*.
3. Evaluate *AssignmentExpression*.
4. Call GetValue(Result(3)).
5. Call the [[Put]] method of Result(1) with arguments Result(2) and Result(4).
6. Return Result(1).

© ISO/IEC 2002 – All rights reserved
Copyright International Organization for Standardization
Provided by IHS under license with ISO
No reproduction or networking permitted without license from IHS
Not for Resale

The production *PropertyName* **:** *Identifier* is evaluated as follows:

1. Form a string literal containing the same sequence of characters as the *Identifier*.
2. Return Result(1).

The production *PropertyName* **:** *StringLiteral* is evaluated as follows:

1. Return the value of the *StringLiteral*.

The production *PropertyName* **:** *NumericLiteral* is evaluated as follows:

1. Form the value of the *NumericLiteral*.
2. Return ToString(Result(1)).

11.1.6 The Grouping Operator

The production *PrimaryExpression* **:** **(** *Expression* **)** is evaluated as follows:

1. Evaluate *Expression*. This may be of type Reference.
2. Return Result(1).

NOTE This algorithm does not apply GetValue to Result(1). The principal motivation for this is so that operators such as **`delete`** and **`typeof`** may be applied to parenthesised expressions.

11.2 Left-Hand-Side Expressions

Syntax

MemberExpression **:**
PrimaryExpression
FunctionExpression
MemberExpression **[** *Expression* **]**
MemberExpression **.** *Identifier*
`new` *MemberExpression Arguments*

NewExpression **:**
MemberExpression
`new` *NewExpression*

CallExpression **:**
MemberExpression Arguments
CallExpression Arguments
CallExpression **[** *Expression* **]**
CallExpression **.** *Identifier*

Arguments **:**
( )
(*ArgumentList* **)**

ArgumentList **:**
AssignmentExpression
ArgumentList **,** *AssignmentExpression*

LeftHandSideExpression **:**
NewExpression
CallExpression

© ISO/IEC 2002 – All rights reserved

Copyright International Organization for Standardization
Provided by IHS under license with ISO
No reproduction or networking permitted without license from IHS
Not for Resale

11.2.1 Property Accessors

Properties are accessed by name, using either the dot notation:

MemberExpression **.** *Identifier*
CallExpression **.** *Identifier*

or the bracket notation:

MemberExpression **[** *Expression* **]**
CallExpression **[** *Expression* **]**

The dot notation is explained by the following syntactic conversion:

MemberExpression **.** *Identifier*

is identical in its behaviour to

MemberExpression **[** <*identifier-string*> **]**

and similarly

CallExpression **.** *Identifier*

is identical in its behaviour to

CallExpression **[** <*identifier-string*> **]**

where <identifier-string> is a string literal containing the same sequence of characters as the *Identifier*.

The production *MemberExpression* **:** *MemberExpression* **[** *Expression* **]** is evaluated as follows:

1. Evaluate *MemberExpression*.
2. Call GetValue(Result(1)).
3. Evaluate *Expression*.
4. Call GetValue(Result(3)).
5. Call ToObject(Result(2)).
6. Call ToString(Result(4)).
7. Return a value of type Reference whose base object is Result(5) and whose property name is Result(6).

The production *CallExpression* **:** *CallExpression* **[** *Expression* **]** is evaluated in exactly the same manner, except that the contained *CallExpression* is evaluated in step 1.

11.2.2 The `new` Operator

The production *NewExpression* **:** **`new`** *NewExpression* is evaluated as follows:

1. Evaluate *NewExpression*.
2. Call GetValue(Result(1)).
3. If Type(Result(2)) is not Object, throw a **TypeError** exception.
4. If Result(2) does not implement the internal [[Construct]] method, throw a **TypeError** exception.
5. Call the [[Construct]] method on Result(2), providing no arguments (that is, an empty list of arguments).
6. Return Result(5).

The production *MemberExpression* **:** **`new`** *MemberExpression Arguments* is evaluated as follows:

1. Evaluate *MemberExpression*.
2. Call GetValue(Result(1)).
3. Evaluate *Arguments*, producing an internal list of argument values (section 11.2.4).
4. If Type(Result(2)) is not Object, throw a **TypeError** exception.

© ISO/IEC 2002 – All rights reserved
Copyright International Organization for Standardization
Provided by IHS under license with ISO
No reproduction or networking permitted without license from IHS
Not for Resale

5. If Result(2) does not implement the internal [[Construct]] method, throw a **TypeError** exception.
6. Call the [[Construct]] method on Result(2), providing the list Result(3) as the argument values.
7. Return Result(6).

11.2.3 Function Calls

The production *CallExpression* **:** *MemberExpression Arguments* is evaluated as follows:

1. Evaluate *MemberExpression*.
2. Evaluate *Arguments*, producing an internal list of argument values (section 11.2.4).
3. Call GetValue(Result(1)).
4. If Type(Result(3)) is not Object, throw a **TypeError** exception.
5. If Result(3) does not implement the internal [[Call]] method, throw a **TypeError** exception.
6. If Type(Result(1)) is Reference, Result(6) is GetBase(Result(1)). Otherwise, Result(6) is **null**.
7. If Result(6) is an activation object, Result(7) is **null**. Otherwise, Result(7) is the same as Result(6).
8. Call the [[Call]] method on Result(3), providing Result(7) as the **this** value and providing the list Result(2) as the argument values.
9. Return Result(8).

The production *CallExpression* **:** *CallExpression Arguments* is evaluated in exactly the same manner, except that the contained *CallExpression* is evaluated in step 1.

NOTE Result(8) will never be of type Reference if Result(3) is a native ECMAScript object. Whether calling a host object can return a value of type Reference is implementation-dependent.

11.2.4 Argument Lists

The evaluation of an argument list produces an internal list of values (section 8.8).

The production *Arguments* **: ( )** is evaluated as follows:

1. Return an empty internal list of values.

The production *Arguments* **: (** *ArgumentList* **)** is evaluated as follows:

1. Evaluate *ArgumentList*.
2. Return Result(1).

The production *ArgumentList* **:** *AssignmentExpression* is evaluated as follows:

1. Evaluate *AssignmentExpression*.
2. Call GetValue(Result(1)).
3. Return an internal list whose sole item is Result(2).

The production *ArgumentList* **:** *ArgumentList* **,** *AssignmentExpression* is evaluated as follows:

1. Evaluate *ArgumentList*.
2. Evaluate *AssignmentExpression*.
3. Call GetValue(Result(2)).
4. Return an internal list whose length is one greater than the length of Result(1) and whose items are the items of Result(1), in order, followed at the end by Result(3), which is the last item of the new list.

11.2.5 Function Expressions

The production *MemberExpression* **:** *FunctionExpression* is evaluated as follows:

1. Evaluate *FunctionExpression*.
2. Return Result(1).

© ISO/IEC 2002 – All rights reserved

Copyright International Organization for Standardization
Provided by IHS under license with ISO
No reproduction or networking permitted without license from IHS
Not for Resale

11.3 Postfix Expressions

Syntax

PostfixExpression **:**
LeftHandSideExpression
LeftHandSideExpression [no *LineTerminator* here] **++**
LeftHandSideExpression [no *LineTerminator* here] **--**

11.3.1 Postfix Increment Operator

The production *PostfixExpression* **:** *LeftHandSideExpression* [no *LineTerminator* here] **++** is evaluated as follows:

1. Evaluate *LeftHandSideExpression*.
2. Call GetValue(Result(1)).
3. Call ToNumber(Result(2)).
4. Add the value **1** to Result(3), using the same rules as for the **+** operator (section 11.6.3).
5. Call PutValue(Result(1), Result(4)).
6. Return Result(3).

11.3.2 Postfix Decrement Operator

The production *PostfixExpression* **:** *LeftHandSideExpression* [no *LineTerminator* here] **--** is evaluated as follows:

1. Evaluate *LeftHandSideExpression*.
2. Call GetValue(Result(1)).
3. Call ToNumber(Result(2)).
4. Subtract the value **1** from Result(3), using the same rules as for the **-** operator (section 11.6.3).
5. Call PutValue(Result(1), Result(4)).
6. Return Result(3).

11.4 Unary Operators

Syntax

UnaryExpression **:**
PostfixExpression
delete *UnaryExpression*
void *UnaryExpression*
typeof *UnaryExpression*
++ *UnaryExpression*
-- *UnaryExpression*
+ *UnaryExpression*
- *UnaryExpression*
~ *UnaryExpression*
! *UnaryExpression*

11.4.1 The **delete** Operator

The production *UnaryExpression* **: delete** *UnaryExpression* is evaluated as follows:

1. Evaluate *UnaryExpression*.
2. If Type(Result(1)) is not Reference, return **true**.
3. Call GetBase(Result(1)).
4. Call GetPropertyName(Result(1)).
5. Call the [[Delete]] method on Result(3), providing Result(4) as the property name to delete.
6. Return Result(5).

Copyright International Organization for Standardization
Provided by IHS under license with ISO
No reproduction or networking permitted without license from IHS
Not for Resale
© ISO/IEC 2002 – All rights reserved

11.4.2 The `void` Operator

The production *UnaryExpression* **:** **`void`** *UnaryExpression* is evaluated as follows:

1. Evaluate *UnaryExpression*.
2. Call GetValue(Result(1)).
3. Return **undefined**.

11.4.3 The `typeof` Operator

The production *UnaryExpression* **:** **`typeof`** *UnaryExpression* is evaluated as follows:

1. Evaluate *UnaryExpression*.
2. If Type(Result(1)) is not Reference, go to step 4.
3. If GetBase(Result(1)) is **null**, return **`"undefined"`**.
4. Call GetValue(Result(1)).
5. Return a string determined by Type(Result(4)) according to the following table:

Type	***Result***
Undefined	**`"undefined"`**
Null	**`"object"`**
Boolean	**`"boolean"`**
Number	**`"number"`**
String	**`"string"`**
Object (native and doesn't implement [[Call]])	**`"object"`**
Object (native and implements [[Call]])	**`"function"`**
Object (host)	Implementation-dependent

11.4.4 Prefix Increment Operator

The production *UnaryExpression* **:** **`++`** *UnaryExpression* is evaluated as follows:

1. Evaluate *UnaryExpression*.
2. Call GetValue(Result(1)).
3. Call ToNumber(Result(2)).
4. Add the value **`1`** to Result(3), using the same rules as for the **`+`** operator (section 11.6.3).
5. Call PutValue(Result(1), Result(4)).
6. Return Result(4).

11.4.5 Prefix Decrement Operator

The production *UnaryExpression* **:** **`--`** *UnaryExpression* is evaluated as follows:

1. Evaluate *UnaryExpression*.
2. Call GetValue(Result(1)).
3. Call ToNumber(Result(2)).
4. Subtract the value **`1`** from Result(3), using the same rules as for the **`-`** operator (section 11.6.3).
5. Call PutValue(Result(1), Result(4)).
6. Return Result(4).

11.4.6 Unary + Operator

The unary + operator converts its operand to Number type.

© ISO/IEC 2002 – All rights reserved

Copyright International Organization for Standardization
Provided by IHS under license with ISO
No reproduction or networking permitted without license from IHS
Not for Resale

The production *UnaryExpression* **: +** *UnaryExpression* is evaluated as follows:

1. Evaluate *UnaryExpression*.
2. Call GetValue(Result(1)).
3. Call ToNumber(Result(2)).
4. Return Result(3).

11.4.7 Unary − Operator

The unary − operator converts its operand to Number type and then negates it. Note that negating **+0** produces **–0**, and negating **–0** produces **+0**.

The production *UnaryExpression* **: –** *UnaryExpression* is evaluated as follows:

1. Evaluate *UnaryExpression*.
2. Call GetValue(Result(1)).
3. Call ToNumber(Result(2)).
4. If Result(3) is **NaN**, return **NaN**.
5. Negate Result(3); that is, compute a number with the same magnitude but opposite sign.
6. Return Result(5).

11.4.8 Bitwise NOT Operator (~)

The production *UnaryExpression* **: ~** *UnaryExpression* is evaluated as follows:

1. Evaluate *UnaryExpression*.
2. Call GetValue(Result(1)).
3. Call ToInt32(Result(2)).
4. Apply bitwise complement to Result(3). The result is a signed 32-bit integer.
5. Return Result(4).

11.4.9 Logical NOT Operator (!)

The production *UnaryExpression* **: !** *UnaryExpression* is evaluated as follows:

1. Evaluate *UnaryExpression*.
2. Call GetValue(Result(1)).
3. Call ToBoolean(Result(2)).
4. If Result(3) is **true**, return **false**.
5. Return **true**.

11.5 Multiplicative Operators

Syntax

MultiplicativeExpression **:**
UnaryExpression
MultiplicativeExpression ***** *UnaryExpression*
MultiplicativeExpression **/** *UnaryExpression*
MultiplicativeExpression **%** *UnaryExpression*

Semantics

The production *MultiplicativeExpression* **:** *MultiplicativeExpression* @ *UnaryExpression*, where @ stands for one of the operators in the above definitions, is evaluated as follows:

1. Evaluate *MultiplicativeExpression*.
2. Call GetValue(Result(1)).
3. Evaluate *UnaryExpression*.
4. Call GetValue(Result(3)).

© ISO/IEC 2002 – All rights reserved
Copyright International Organization for Standardization
Provided by IHS under license with ISO
No reproduction or networking permitted without license from IHS
Not for Resale

5. Call ToNumber(Result(2)).
6. Call ToNumber(Result(4)).
7. Apply the specified operation (*, /, or %) to Result(5) and Result(6). See the notes below (sections 11.5.1, 11.5.2, 11.5.3).
8. Return Result(7).

11.5.1 Applying the * Operator

The * operator performs multiplication, producing the product of its operands. Multiplication is commutative. Multiplication is not always associative in ECMAScript, because of finite precision.

The result of a floating-point multiplication is governed by the rules of IEEE 754 double-precision arithmetic:

- If either operand is **NaN**, the result is **NaN**.
- The sign of the result is positive if both operands have the same sign, negative if the operands have different signs.
- Multiplication of an infinity by a zero results in **NaN**.
- Multiplication of an infinity by an infinity results in an infinity. The sign is determined by the rule already stated above.
- Multiplication of an infinity by a finite non-zero value results in a signed infinity. The sign is determined by the rule already stated above.
- In the remaining cases, where neither an infinity or NaN is involved, the product is computed and rounded to the nearest representable value using IEEE 754 round-to-nearest mode. If the magnitude is too large to represent, the result is then an infinity of appropriate sign. If the magnitude is too small to represent, the result is then a zero of appropriate sign. The ECMAScript language requires support of gradual underflow as defined by IEEE 754.

11.5.2 Applying the / Operator

The / operator performs division, producing the quotient of its operands. The left operand is the dividend and the right operand is the divisor. ECMAScript does not perform integer division. The operands and result of all division operations are double-precision floating-point numbers. The result of division is determined by the specification of IEEE 754 arithmetic:

- If either operand is **NaN**, the result is **NaN**.
- The sign of the result is positive if both operands have the same sign, negative if the operands have different signs.
- Division of an infinity by an infinity results in **NaN**.
- Division of an infinity by a zero results in an infinity. The sign is determined by the rule already stated above.
- Division of an infinity by a non-zero finite value results in a signed infinity. The sign is determined by the rule already stated above.
- Division of a finite value by an infinity results in zero. The sign is determined by the rule already stated above.
- Division of a zero by a zero results in **NaN**; division of zero by any other finite value results in zero, with the sign determined by the rule already stated above.
- Division of a non-zero finite value by a zero results in a signed infinity. The sign is determined by the rule already stated above.
- In the remaining cases, where neither an infinity, nor a zero, nor **NaN** is involved, the quotient is computed and rounded to the nearest representable value using IEEE 754 round-to-nearest mode. If the magnitude is too large to represent, the operation overflows; the result is then an infinity of appropriate sign. If the magnitude is too small to represent, the operation underflows and the result is a zero of the appropriate sign. The ECMAScript language requires support of gradual underflow as defined by IEEE 754.

11.5.3 Applying the % Operator

The % operator yields the remainder of its operands from an implied division; the left operand is the dividend and the right operand is the divisor.

© ISO/IEC 2002 – All rights reserved

Copyright International Organization for Standardization
Provided by IHS under license with ISO
No reproduction or networking permitted without license from IHS
Not for Resale

NOTE In C and C++, the remainder operator accepts only integral operands; in ECMAScript, it also accepts floating-point operands.

The result of a floating-point remainder operation as computed by the % operator is not the same as the "remainder" operation defined by IEEE 754. The IEEE 754 "remainder" operation computes the remainder from a rounding division, not a truncating division, and so its behaviour is not analogous to that of the usual integer remainder operator. Instead the ECMAScript language defines % on floating-point operations to behave in a manner analogous to that of the Java integer remainder operator; this may be compared with the C library function fmod.

The result of a ECMAScript floating-point remainder operation is determined by the rules of IEEE arithmetic:

- If either operand is **NaN**, the result is **NaN**.
- The sign of the result equals the sign of the dividend.
- If the dividend is an infinity, or the divisor is a zero, or both, the result is **NaN**.
- If the dividend is finite and the divisor is an infinity, the result equals the dividend.
- If the dividend is a zero and the divisor is finite, the result is the same as the dividend.
- In the remaining cases, where neither an infinity, nor a zero, nor **NaN** is involved, the floating-point remainder r from a dividend n and a divisor d is defined by the mathematical relation r = n – (d * q) where q is an integer that is negative only if n/d is negative and positive only if n/d is positive, and whose magnitude is as large as possible without exceeding the magnitude of the true mathematical quotient of n and d.

11.6 Additive Operators

Syntax

AdditiveExpression **:**
MultiplicativeExpression
AdditiveExpression **+** *MultiplicativeExpression*
AdditiveExpression **–** *MultiplicativeExpression*

11.6.1 The Addition operator (+)

The addition operator either performs string concatenation or numeric addition.

The production *AdditiveExpression* **:** *AdditiveExpression* **+** *MultiplicativeExpression* is evaluated as follows:

1. Evaluate *AdditiveExpression*.
2. Call GetValue(Result(1)).
3. Evaluate *MultiplicativeExpression*.
4. Call GetValue(Result(3)).
5. Call ToPrimitive(Result(2)).
6. Call ToPrimitive(Result(4)).
7. If Type(Result(5)) is String *or* Type(Result(6)) is String, go to step 12. (Note that this step differs from step 3 in the comparison algorithm for the relational operators, by using *or* instead of *and*.)
8. Call ToNumber(Result(5)).
9. Call ToNumber(Result(6)).
10. Apply the addition operation to Result(8) and Result(9). See the note below (section 11.6.3).
11. Return Result(10).
12. Call ToString(Result(5)).
13. Call ToString(Result(6)).
14. Concatenate Result(12) followed by Result(13).
15. Return Result(14).

NOTE No hint is provided in the calls to ToPrimitive in steps 5 and 6. All native ECMAScript objects except Date objects handle the absence of a hint as if the hint Number were given; Date objects handle the absence of a hint as if the hint String were given. Host objects may handle the absence of a hint in some other manner.

© ISO/IEC 2002 – All rights reserved
Copyright International Organization for Standardization
Provided by IHS under license with ISO
No reproduction or networking permitted without license from IHS
Not for Resale

11.6.2 The Subtraction Operator (–)

The production *AdditiveExpression* **:** *AdditiveExpression* **–** *MultiplicativeExpression* is evaluated as follows:

1. Evaluate *AdditiveExpression*.
2. Call GetValue(Result(1)).
3. Evaluate *MultiplicativeExpression*.
4. Call GetValue(Result(3)).
5. Call ToNumber(Result(2)).
6. Call ToNumber(Result(4)).
7. Apply the subtraction operation to Result(5) and Result(6). See the note below (section 11.6.3).
8. Return Result(7).

11.6.3 Applying the Additive Operators (+ , –) to Numbers

The **+** operator performs addition when applied to two operands of numeric type, producing the sum of the operands. The **–** operator performs subtraction, producing the difference of two numeric operands.

Addition is a commutative operation, but not always associative.

The result of an addition is determined using the rules of IEEE 754 double-precision arithmetic:

- If either operand is **NaN**, the result is **NaN**.
- The sum of two infinities of opposite sign is **NaN**.
- The sum of two infinities of the same sign is the infinity of that sign.
- The sum of an infinity and a finite value is equal to the infinite operand.
- The sum of two negative zeros is **–0**. The sum of two positive zeros, or of two zeros of opposite sign, is **+0**.
- The sum of a zero and a nonzero finite value is equal to the nonzero operand.
- The sum of two nonzero finite values of the same magnitude and opposite sign is **+0**.
- In the remaining cases, where neither an infinity, nor a zero, nor NaN is involved, and the operands have the same sign or have different magnitudes, the sum is computed and rounded to the nearest representable value using IEEE 754 round-to-nearest mode. If the magnitude is too large to represent, the operation overflows and the result is then an infinity of appropriate sign. The ECMAScript language requires support of gradual underflow as defined by IEEE 754.

The **–** operator performs subtraction when applied to two operands of numeric type, producing the difference of its operands; the left operand is the minuend and the right operand is the subtrahend. Given numeric operands *a* and *b*, it is always the case that $a-b$ produces the same result as $a+(-b)$.

11.7 Bitwise Shift Operators

Syntax

ShiftExpression **:**
AdditiveExpression
ShiftExpression **<<** *AdditiveExpression*
ShiftExpression **>>** *AdditiveExpression*
ShiftExpression **>>>** *AdditiveExpression*

11.7.1 The Left Shift Operator (<<)

Performs a bitwise left shift operation on the left operand by the amount specified by the right operand.

The production *ShiftExpression* **:** *ShiftExpression* **<<** *AdditiveExpression* is evaluated as follows:

1. Evaluate *ShiftExpression*.
2. Call GetValue(Result(1)).
3. Evaluate *AdditiveExpression*.

© ISO/IEC 2002 – All rights reserved

Copyright International Organization for Standardization
Provided by IHS under license with ISO
No reproduction or networking permitted without license from IHS
Not for Resale

4. Call GetValue(Result(3)).
5. Call ToInt32(Result(2)).
6. Call ToUint32(Result(4)).
7. Mask out all but the least significant 5 bits of Result(6), that is, compute Result(6) & 0x1F.
8. Left shift Result(5) by Result(7) bits. The result is a signed 32 bit integer.
9. Return Result(8).

11.7.2 The Signed Right Shift Operator (>>)

Performs a sign-filling bitwise right shift operation on the left operand by the amount specified by the right operand.

The production *ShiftExpression* **:** *ShiftExpression* **>>** *AdditiveExpression* is evaluated as follows:

1. Evaluate *ShiftExpression*.
2. Call GetValue(Result(1)).
3. Evaluate *AdditiveExpression*.
4. Call GetValue(Result(3)).
5. Call ToInt32(Result(2)).
6. Call ToUint32(Result(4)).
7. Mask out all but the least significant 5 bits of Result(6), that is, compute Result(6) & 0x1F.
8. Perform sign-extending right shift of Result(5) by Result(7) bits. The most significant bit is propagated. The result is a signed 32 bit integer.
9. Return Result(8).

11.7.3 The Unsigned Right Shift Operator (>>>)

Performs a zero-filling bitwise right shift operation on the left operand by the amount specified by the right operand.

The production *ShiftExpression* **:** *ShiftExpression* **>>>** *AdditiveExpression* is evaluated as follows:

1. Evaluate *ShiftExpression*.
2. Call GetValue(Result(1)).
3. Evaluate *AdditiveExpression*.
4. Call GetValue(Result(3)).
5. Call ToUint32(Result(2)).
6. Call ToUint32(Result(4)).
7. Mask out all but the least significant 5 bits of Result(6), that is, compute Result(6) & 0x1F.
8. Perform zero-filling right shift of Result(5) by Result(7) bits. Vacated bits are filled with zero. The result is an unsigned 32 bit integer.
9. Return Result(8).

11.8 Relational Operators

Syntax

RelationalExpression **:**
ShiftExpression
RelationalExpression **<** *ShiftExpression*
RelationalExpression **>** *ShiftExpression*
RelationalExpression **<=** *ShiftExpression*
RelationalExpression **>=** *ShiftExpression*
RelationalExpression **`instanceof`** *ShiftExpression*
RelationalExpression **`in`** *ShiftExpression*

© ISO/IEC 2002 – All rights reserved
Copyright International Organization for Standardization
Provided by IHS under license with ISO
No reproduction or networking permitted without license from IHS
Not for Resale

RelationalExpressionNoIn **:**
ShiftExpression
RelationalExpressionNoIn **<** *ShiftExpression*
RelationalExpressionNoIn **>** *ShiftExpression*
RelationalExpressionNoIn **<=** *ShiftExpression*
RelationalExpressionNoIn **>=** *ShiftExpression*
RelationalExpressionNoIn **`instanceof`** *ShiftExpression*

NOTE The *NoIn* variants are needed to avoid confusing the `in` operator in a relational expression with the `in` operator in a `for` statement.

Semantics

The result of evaluating a relational operator is always of type Boolean, reflecting whether the relationship named by the operator holds between its two operands.

The *RelationalExpressionNoIn* productions are evaluated in the same manner as the *RelationalExpression* productions except that the contained *RelationalExpressionNoIn* is evaluated instead of the contained *RelationalExpression*.

11.8.1 The Less-than Operator (<)

The production *RelationalExpression* **:** *RelationalExpression* **<** *ShiftExpression* is evaluated as follows:

1. Evaluate *RelationalExpression*.
2. Call GetValue(Result(1)).
3. Evaluate *ShiftExpression*.
4. Call GetValue(Result(3)).
5. Perform the comparison Result(2) < Result(4). (Section 11.8.5.)
6. If Result(5) is **undefined**, return **false**. Otherwise, return Result(5).

11.8.2 The Greater-than Operator (>)

The production *RelationalExpression* **:** *RelationalExpression* **>** *ShiftExpression* is evaluated as follows:

1. Evaluate *RelationalExpression*.
2. Call GetValue(Result(1)).
3. Evaluate *ShiftExpression*.
4. Call GetValue(Result(3)).
5. Perform the comparison Result(4) < Result(2). (Section 11.8.5.)
6. If Result(5) is **undefined**, return **false**. Otherwise, return Result(5).

11.8.3 The Less-than-or-equal Operator (<=)

The production *RelationalExpression* **:** *RelationalExpression* **<=** *ShiftExpression* is evaluated as follows:

1. Evaluate *RelationalExpression*.
2. Call GetValue(Result(1)).
3. Evaluate *ShiftExpression*.
4. Call GetValue(Result(3)).
5. Perform the comparison Result(4) < Result(2). (Section 11.8.5.)
6. If Result(5) is **true** or **undefined**, return **false**. Otherwise, return **true**.

11.8.4 The Greater-than-or-equal Operator (>=)

The production *RelationalExpression* **:** *RelationalExpression* **>=** *ShiftExpression* is evaluated as follows:

1. Evaluate *RelationalExpression*.
2. Call GetValue(Result(1)).
3. Evaluate *ShiftExpression*.

--`,,```,,,,````-`-`,,`,,`,`,,`---
© ISO/IEC 2002 – All rights reserved

Copyright International Organization for Standardization
Provided by IHS under license with ISO
No reproduction or networking permitted without license from IHS
Not for Resale

4. Call GetValue(Result(3)).
5. Perform the comparison Result(2) < Result(4). (Section 11.8.5.)
6. If Result(5) is **true** or **undefined**, return **false**. Otherwise, return **true**.

11.8.5 The Abstract Relational Comparison Algorithm

The comparison *x* < *y*, where *x* and *y* are values, produces **true**, **false**, or **undefined** (which indicates that at least one operand is **NaN**). Such a comparison is performed as follows:

1. Call ToPrimitive(*x*, hint Number).
2. Call ToPrimitive(*y*, hint Number).
3. If Type(Result(1)) is String and Type(Result(2)) is String, go to step 16. (Note that this step differs from step 7 in the algorithm for the addition operator **+** in using *and* instead of *or*.)
4. Call ToNumber(Result(1)).
5. Call ToNumber(Result(2)).
6. If Result(4) is **NaN**, return **undefined**.
7. If Result(5) is **NaN**, return **undefined**.
8. If Result(4) and Result(5) are the same number value, return **false**.
9. If Result(4) is **+0** and Result(5) is **–0**, return **false**.
10. If Result(4) is **–0** and Result(5) is **+0**, return **false**.
11. If Result(4) is **+∞**, return **false**.
12. If Result(5) is **+∞**, return **true**.
13. If Result(5) is **–∞**, return **false**.
14. If Result(4) is –∞, return **true**.
15. If the mathematical value of Result(4) is less than the mathematical value of Result(5)—note that these mathematical values are both finite and not both zero—return **true**. Otherwise, return **false**.
16. If Result(2) is a prefix of Result(1), return **false**. (A string value *p* is a prefix of string value *q* if *q* can be the result of concatenating *p* and some other string *r*. Note that any string is a prefix of itself, because r may be the empty string.)
17. If Result(1) is a prefix of Result(2), return **true**.
18. Let *k* be the smallest nonnegative integer such that the character at position *k* within Result(1) is different from the character at position *k* within Result(2). (There must be such a *k*, for neither string is a prefix of the other.)
19. Let *m* be the integer that is the code point value for the character at position *k* within Result(1).
20. Let *n* be the integer that is the code point value for the character at position *k* within Result(2).
21. If *m* < *n*, return **true**. Otherwise, return **false**.

NOTE The comparison of strings uses a simple lexicographic ordering on sequences of code point value values. There is no attempt to use the more complex, semantically oriented definitions of character or string equality and collating order defined in the Unicode specification. Therefore strings that are canonically equal according to the Unicode standard could test as unequal. In effect this algorithm assumes that both strings are already in normalised form.

11.8.6 The instanceof operator

The production *RelationalExpression***:** *RelationalExpression* **`instanceof`** *ShiftExpression* is evaluated as follows:

1. Evaluate *RelationalExpression*.
2. Call GetValue(Result(1)).
3. Evaluate *ShiftExpression*.
4. Call GetValue(Result(3)).
5. If Result(4) is not an object, throw a **TypeError** exception.
6. If Result(4) does not have a [[HasInstance]] method, throw a **TypeError** exception.
7. Call the [[HasInstance]] method of Result(4) with parameter Result(2).
8. Return Result(7).

11.8.7 The in operator

The production *RelationalExpression* **:** *RelationalExpression* **`in`** *ShiftExpression* is evaluated as follows:

1. Evaluate *RelationalExpression*.
2. Call GetValue(Result(1)).

© ISO/IEC 2002 – All rights reserved
Copyright International Organization for Standardization
Provided by IHS under license with ISO
No reproduction or networking permitted without license from IHS
Not for Resale

3. Evaluate *ShiftExpression*.
4. Call GetValue(Result(3)).
5. If Result(4) is not an object, throw a **TypeError** exception.
6. Call ToString(Result(2)).
7. Call the [[HasProperty]] method of Result(4) with parameter Result(6).
8. Return Result(7).

11.9 Equality Operators

Syntax

EqualityExpression **:**
RelationalExpression
EqualityExpression **==** *RelationalExpression*
EqualityExpression **!=** *RelationalExpression*
EqualityExpression **===** *RelationalExpression*
EqualityExpression **!==** *RelationalExpression*

EqualityExpressionNoIn **:**
RelationalExpressionNoIn
EqualityExpressionNoIn **==** *RelationalExpressionNoIn*
EqualityExpressionNoIn **!=** *RelationalExpressionNoIn*
EqualityExpressionNoIn **===** *RelationalExpressionNoIn*
EqualityExpressionNoIn **!==** *RelationalExpressionNoIn*

Semantics

The result of evaluating an equality operator is always of type Boolean, reflecting whether the relationship named by the operator holds between its two operands.

The *EqualityExpressionNoIn* productions are evaluated in the same manner as the *EqualityExpression* productions except that the contained *EqualityExpressionNoIn* and *RelationalExpressionNoIn* are evaluated instead of the contained *EqualityExpression* and *RelationalExpression*, respectively.

11.9.1 The Equals Operator (==)

The production *EqualityExpression* : *EqualityExpression* **==** *RelationalExpression* is evaluated as follows:

1. Evaluate *EqualityExpression*.
2. Call GetValue(Result(1)).
3. Evaluate *RelationalExpression*.
4. Call GetValue(Result(3)).
5. Perform the comparison Result(4) == Result(2). (Section 11.9.3.)
6. Return Result(5).

11.9.2 The Does-not-equals Operator (!=)

The production *EqualityExpression* **:** *EqualityExpression* **!=** *RelationalExpression* is evaluated as follows:

1. Evaluate *EqualityExpression*.
2. Call GetValue(Result(1)).
3. Evaluate *RelationalExpression*.
4. Call GetValue(Result(3)).
5. Perform the comparison Result(4) == Result(2). (Section 11.9.3.)
6. If Result(5) is **true**, return **false**. Otherwise, return **true**.

© ISO/IEC 2002 – All rights reserved

Copyright International Organization for Standardization
Provided by IHS under license with ISO
No reproduction or networking permitted without license from IHS
Not for Resale

11.9.3 The Abstract Equality Comparison Algorithm

The comparison *x* == *y*, where *x* and *y* are values, produces **true** or **false**. Such a comparison is performed as follows:

1. If Type(*x*) is different from Type(*y*), go to step 14.
2. If Type(*x*) is Undefined, return **true**.
3. If Type(*x*) is Null, return **true**.
4. If Type(*x*) is not Number, go to step 11.
5. If *x* is **NaN**, return **false**.
6. If *y* is **NaN**, return **false**.
7. If *x* is the same number value as *y*, return **true**.
8. If *x* is **+0** and *y* is –**0**, return **true**.
9. If *x* is **–0** and *y* is **+0**, return **true**.
10. Return **false**.
11. If Type(*x*) is String, then return **true** if *x* and *y* are exactly the same sequence of characters (same length and same characters in corresponding positions). Otherwise, return **false**.
12. If Type(*x*) is Boolean, return **true** if *x* and *y* are both **true** or both **false**. Otherwise, return **false**.
13. Return **true** if *x* and *y* refer to the same object or if they refer to objects joined to each other (section 13.1.2). Otherwise, return **false**.
14. If *x* is **null** and *y* is **undefined**, return **true**.
15. If *x* is **undefined** and *y* is **null**, return **true**.
16. If Type(*x*) is Number and Type(*y*) is String,
    return the result of the comparison *x* == ToNumber(*y*).
17. If Type(*x*) is String and Type(*y*) is Number,
    return the result of the comparison ToNumber(*x*) == *y*.
18. If Type(*x*) is Boolean, return the result of the comparison ToNumber(*x*) == *y*.
19. If Type(*y*) is Boolean, return the result of the comparison *x* == ToNumber(*y*).
20. If Type(*x*) is either String or Number and Type(*y*) is Object,
    return the result of the comparison *x* == ToPrimitive(*y*).
21. If Type(*x*) is Object and Type(*y*) is either String or Number,
    return the result of the comparison ToPrimitive(*x*) == *y*.
22. Return **false**.

NOTE Given the above definition of equality:

String comparison can be forced by: `"" + a == "" + b`.

Numeric comparison can be forced by: `a - 0 == b - 0`.

Boolean comparison can be forced by: `!a == !b`.

The equality operators maintain the following invariants:

1. `A != B` is equivalent to `!(A == B)`.

2. `A == B` is equivalent to `B == A`, except in the order of evaluation of `A` and `B`.

The equality operator is not always transitive. For example, there might be two distinct String objects, each representing the same string value; each String object would be considered equal to the string value by the **==** operator, but the two String objects would not be equal to each other.

Comparison of strings uses a simple equality test on sequences of code point value values. There is no attempt to use the more complex, semantically oriented definitions of character or string equality and collating order defined in the Unicode 2.0 specification. Therefore strings that are canonically equal according to the Unicode standard could test as unequal. In effect this algorithm assumes that both strings are already in normalised form.

--`,,```,,,,````-`-`,,`,,`,`,,`---

© ISO/IEC 2002 – All rights reserved
Copyright International Organization for Standardization
Provided by IHS under license with ISO
No reproduction or networking permitted without license from IHS
Not for Resale

11.9.4 The Strict Equals Operator (===)

The production *EqualityExpression* **:** *EqualityExpression* **===** *RelationalExpression* is evaluated as follows:

1. Evaluate *EqualityExpression*.
2. Call GetValue(Result(1)).
3. Evaluate *RelationalExpression*.
4. Call GetValue(Result(3)).
5. Perform the comparison Result(4) === Result(2). (See below.)
6. Return Result(5).

11.9.5 The Strict Does-not-equal Operator (!==)

The production *EqualityExpression* **:** *EqualityExpression* **!==** *RelationalExpression* is evaluated as follows:

1. Evaluate *EqualityExpression*.
2. Call GetValue(Result(1)).
3. Evaluate *RelationalExpression*.
4. Call GetValue(Result(3)).
5. Perform the comparison Result(4) === Result(2). (See below.)
6. If Result(5) is **true**, return **false**. Otherwise, return **true**.

11.9.6 The Strict Equality Comparison Algorithm

The comparison *x* === *y*, where *x* and *y* are values, produces **true** or **false**. Such a comparison is performed as follows:

1. If Type(*x*) is different from Type(*y*), return **false**.
2. If Type(*x*) is Undefined, return **true**.
3. If Type(*x*) is Null, return **true**.
4. If Type(*x*) is not Number, go to step 11.
5. If *x* is **NaN**, return **false**.
6. If *y* is **NaN**, return **false**.
7. If *x* is the same number value as *y*, return **true**.
8. If *x* is +0 and *y* is −0, return **true**.
9. If *x* is −0 and *y* is +0, return **true**.
10. Return **false**.
11. If Type(*x*) is String, then return **true** if *x* and *y* are exactly the same sequence of characters (same length and same characters in corresponding positions); otherwise, return **false**.
12. If Type(*x*) is Boolean, return **true** if *x* and *y* are both **true** or both **false**; otherwise, return **false**.
13. Return **true** if *x* and *y* refer to the same object or if they refer to objects joined to each other (section 13.1.2). Otherwise, return **false**.

11.10 Binary Bitwise Operators

Syntax

BitwiseANDExpression **:**
EqualityExpression
BitwiseANDExpression **&** *EqualityExpression*

BitwiseANDExpressionNoIn **:**
EqualityExpressionNoIn
BitwiseANDExpressionNoIn **&** *EqualityExpressionNoIn*

BitwiseXORExpression **:**
BitwiseANDExpression
BitwiseXORExpression **^** *BitwiseANDExpression*

© ISO/IEC 2002 – All rights reserved

Copyright International Organization for Standardization
Provided by IHS under license with ISO
No reproduction or networking permitted without license from IHS
Not for Resale

BitwiseXORExpressionNoIn **:**
BitwiseANDExpressionNoIn
BitwiseXORExpressionNoIn **^** *BitwiseANDExpressionNoIn*

BitwiseORExpression **:**
BitwiseXORExpression
BitwiseORExpression **|** *BitwiseXORExpression*

BitwiseORExpressionNoIn **:**
BitwiseXORExpressionNoIn
BitwiseORExpressionNoIn **|** *BitwiseXORExpressionNoIn*

Semantics

The production *A* **:** *A* @ *B*, where @ is one of the bitwise operators in the productions above, is evaluated as follows:

1. Evaluate *A*.
2. Call GetValue(Result(1)).
3. Evaluate *B*.
4. Call GetValue(Result(3)).
5. Call ToInt32(Result(2)).
6. Call ToInt32(Result(4)).
7. Apply the bitwise operator @ to Result(5) and Result(6). The result is a signed 32 bit integer.
8. Return Result(7).

11.11 Binary Logical Operators

Syntax

LogicalANDExpression **:**
BitwiseORExpression
LogicalANDExpression **&&** *BitwiseORExpression*

LogicalANDExpressionNoIn **:**
BitwiseORExpressionNoIn
LogicalANDExpressionNoIn **&&** *BitwiseORExpressionNoIn*

LogicalORExpression **:**
LogicalANDExpression
LogicalORExpression **||** *LogicalANDExpression*

LogicalORExpressionNoIn **:**
LogicalANDExpressionNoIn
LogicalORExpressionNoIn **||** *LogicalANDExpressionNoIn*

Semantics

The production *LogicalANDExpression* **:** *LogicalANDExpression* **&&** *BitwiseORExpression* is evaluated as follows:

1. Evaluate *LogicalANDExpression*.
2. Call GetValue(Result(1)).
3. Call ToBoolean(Result(2)).
4. If Result(3) is **false**, return Result(2).
5. Evaluate *BitwiseORExpression*.
6. Call GetValue(Result(5)).
7. Return Result(6).

--`,,```,,,,````-`-`,,`,,`,`,,`---
© ISO/IEC 2002 – All rights reserved
Copyright International Organization for Standardization
Provided by IHS under license with ISO
No reproduction or networking permitted without license from IHS
Not for Resale

The production *LogicalORExpression* **:** *LogicalORExpression* **||** *LogicalANDExpression* is evaluated as follows:

1. Evaluate *LogicalORExpression*.
2. Call GetValue(Result(1)).
3. Call ToBoolean(Result(2)).
4. If Result(3) is **true**, return Result(2).
5. Evaluate *LogicalANDExpression*.
6. Call GetValue(Result(5)).
7. Return Result(6).

The *LogicalANDExpressionNoIn* and *LogicalORExpressionNoIn* productions are evaluated in the same manner as the *LogicalANDExpression* and *LogicalORExpression* productions except that the contained *LogicalANDExpressionNoIn*, *BitwiseORExpressionNoIn* and *LogicalORExpressionNoIn* are evaluated instead of the contained *LogicalANDExpression*, *BitwiseORExpression* and *LogicalORExpression*, respectively.

NOTE The value produced by a **&&** or **||** operator is not necessarily of type Boolean. The value produced will always be the value of one of the two operand expressions.

11.12 Conditional Operator (**? :**)

Syntax

ConditionalExpression **:**
LogicalORExpression
LogicalORExpression **?** *AssignmentExpression* **:** *AssignmentExpression*

ConditionalExpressionNoIn **:**
LogicalORExpressionNoIn
LogicalORExpressionNoIn **?** *AssignmentExpression* **:** *AssignmentExpressionNoIn*

Semantics

The production *ConditionalExpression* **:** *LogicalORExpression* **?** *AssignmentExpression* **:** *AssignmentExpression* is evaluated as follows:

1. Evaluate *LogicalORExpression*.
2. Call GetValue(Result(1)).
3. Call ToBoolean(Result(2)).
4. If Result(3) is **false**, go to step 8.
5. Evaluate the first *AssignmentExpression*.
6. Call GetValue(Result(5)).
7. Return Result(6).
8. Evaluate the second *AssignmentExpression*.
9. Call GetValue(Result(8)).
10. Return Result(9).

The *ConditionalExpressionNoIn* production is evaluated in the same manner as the *ConditionalExpression* production except that the contained *LogicalORExpressionNoIn*, *AssignmentExpression* and *AssignmentExpressionNoIn* are evaluated instead of the contained *LogicalORExpression*, first *AssignmentExpression* and second *AssignmentExpression*, respectively.

NOTE The grammar for a *ConditionalExpression* in ECMAScript is a little bit different from that in C and Java, which each allow the second subexpression to be an *Expression* but restrict the third expression to be a *ConditionalExpression*. The motivation for this difference in ECMAScript is to allow an assignment expression to be governed by either arm of a conditional and to eliminate the confusing and fairly useless case of a comma expression as the centre expression.

© ISO/IEC 2002 – All rights reserved

Copyright International Organization for Standardization
Provided by IHS under license with ISO
No reproduction or networking permitted without license from IHS
Not for Resale

11.13 Assignment Operators

Syntax

AssignmentExpression **:**
ConditionalExpression
LeftHandSideExpression AssignmentOperator AssignmentExpression

AssignmentExpressionNoIn **:**
ConditionalExpressionNoIn
LeftHandSideExpression AssignmentOperator AssignmentExpressionNoIn

AssignmentOperator **: one of**
= *= /= %= += -= <<= >>= >>>= &= ^= |=

Semantics

The *AssignmentExpressionNoIn* productions are evaluated in the same manner as the *AssignmentExpression* productions except that the contained *ConditionalExpressionNoIn and AssignmentExpressionNoIn* are evaluated instead of the contained *ConditionalExpression* and *AssignmentExpression*, respectively.

11.13.1 Simple Assignment (=)

The production *AssignmentExpression* **:** *LeftHandSideExpression* **=** *AssignmentExpression* is evaluated as follows:

1. Evaluate *LeftHandSideExpression*.
2. Evaluate *AssignmentExpression*.
3. Call GetValue(Result(2)).
4. Call PutValue(Result(1), Result(3)).
5. Return Result(3).

11.13.2 Compound Assignment (op=)

The production *AssignmentExpression* **:** *LeftHandSideExpression* @ **=** *AssignmentExpression*, where @ represents one of the operators indicated above, is evaluated as follows:

1. Evaluate *LeftHandSideExpression*.
2. Call GetValue(Result(1)).
3. Evaluate *AssignmentExpression*.
4. Call GetValue(Result(3)).
5. Apply operator @ to Result(2) and Result(4).
6. Call PutValue(Result(1), Result(5)).
7. Return Result(5).

11.14 Comma Operator (,)

Syntax

Expression **:**
AssignmentExpression
Expression **,** *AssignmentExpression*

ExpressionNoIn **:**
AssignmentExpressionNoIn
ExpressionNoIn **,** *AssignmentExpressionNoIn*

© ISO/IEC 2002 – All rights reserved
Copyright International Organization for Standardization
Provided by IHS under license with ISO
No reproduction or networking permitted without license from IHS
Not for Resale

Semantics

The production *Expression* **:** *Expression* **,** *AssignmentExpression* is evaluated as follows:

1. Evaluate *Expression*.
2. Call GetValue(Result(1)).
3. Evaluate *AssignmentExpression*.
4. Call GetValue(Result(3)).
5. Return Result(4).

The *ExpressionNoIn* production is evaluated in the same manner as the *Expression* production except that the contained *ExpressionNoIn* and *AssignmentExpressionNoIn* are evaluated instead of the contained *Expression* and *AssignmentExpression*, respectively.

12 Statements

Syntax

Statement **:**
Block
VariableStatement
EmptyStatement
ExpressionStatement
IfStatement
IterationStatement
ContinueStatement
BreakStatement
ReturnStatement
WithStatement
LabelledStatement
SwitchStatement
ThrowStatement
TryStatement

Semantics

A *Statement* can be part of a *LabelledStatement*, which itself can be part of a *LabelledStatement*, and so on. The labels introduced this way are collectively referred to as the “current label set” when describing the semantics of individual statements. A *LabelledStatement* has no semantic meaning other than the introduction of a label to a *label set*. The label set of an *IterationStatement* or a *SwitchStatement* initially contains the single element **empty**. The label set of any other statement is initially empty.

12.1 Block

Syntax

Block **:**
{ $StatementList_{opt}$ **}**

StatementList **:**
Statement
StatementList Statement

Semantics

The production *Block* **: { }** is evaluated as follows:

1. Return (**normal**, **empty**, **empty**).

© ISO/IEC 2002 – All rights reserved

Copyright International Organization for Standardization
Provided by IHS under license with ISO
No reproduction or networking permitted without license from IHS
Not for Resale

The production *Block* **:** **{** *StatementList* **}** is evaluated as follows:

1. Evaluate *StatementList*.
2. Return Result(1).

The production *StatementList* **:** *Statement* is evaluated as follows:

1. Evaluate *Statement*.
2. If an exception was thrown, return (**throw**, *V*, empty) where *V* is the exception. (Execution now proceeds as if no exception were thrown.)
3. Return Result(1).

The production *StatementList* **:** *StatementList Statement* is evaluated as follows:

1. Evaluate *StatementList*.
2. If Result(1) is an abrupt completion, return Result(1).
3. Evaluate *Statement*.
4. If an exception was thrown, return (**throw**, *V*, empty) where *V* is the exception. (Execution now proceeds as if no exception were thrown.)
5. If Result(3).value is **empty**, let *V* = Result(1).value, otherwise let V = Result(3).value.
6. Return (Result(3).type, *V*, Result(3).target).

12.2 Variable statement

Syntax

VariableStatement **:**
var *VariableDeclarationList* **;**

VariableDeclarationList **:**
VariableDeclaration
VariableDeclarationList **,** *VariableDeclaration*

VariableDeclarationListNoIn **:**
VariableDeclarationNoIn
VariableDeclarationListNoIn **,** *VariableDeclarationNoIn*

VariableDeclaration **:**
Identifier Initialiser$_{opt}$

VariableDeclarationNoIn **:**
Identifier InitialiserNoIn$_{opt}$

Initialiser **:**
= *AssignmentExpression*

InitialiserNoIn **:**
= *AssignmentExpressionNoIn*

Description

If the variable statement occurs inside a *FunctionDeclaration*, the variables are defined with function-local scope in that function, as described in section 10.1.3. Otherwise, they are defined with global scope (that is, they are created as members of the global object, as described in section 10.1.3) using property attributes { DontDelete }. Variables are created when the execution scope is entered. A *Block* does not define a new execution scope. Only *Program* and *FunctionDeclaration* produce a new scope. Variables are initialised to **undefined** when created. A variable with an *Initialiser* is assigned the value of its *AssignmentExpression* when the *VariableStatement* is executed, not when the variable is created.

© ISO/IEC 2002 – All rights reserved
Copyright International Organization for Standardization
Provided by IHS under license with ISO
No reproduction or networking permitted without license from IHS
Not for Resale

Semantics

The production *VariableStatement* **:** **`var`** *VariableDeclarationList* **`;`** is evaluated as follows:

1. Evaluate *VariableDeclarationList*.
2. Return (**normal**, **empty**, **empty**).

The production *VariableDeclarationList* **:***VariableDeclaration* is evaluated as follows:

1. Evaluate *VariableDeclaration*.

The production *VariableDeclarationList* **:** *VariableDeclarationList* **`,`** *VariableDeclaration* is evaluated as follows:

1. Evaluate *VariableDeclarationList*.
2. Evaluate *VariableDeclaration*.

The production *VariableDeclaration* **:** *Identifier* is evaluated as follows:

1. Return a string value containing the same sequence of characters as in the *Identifier*.

The production *VariableDeclaration* **:** *Identifier Initialiser* is evaluated as follows:

1. Evaluate *Identifier* as described in section 11.1.2.
2. Evaluate *Initialiser*.
3. Call GetValue(Result(2)).
4. Call PutValue(Result(1), Result(3)).
5. Return a string value containing the same sequence of characters as in the *Identifier*.

The production *Initialiser* **:** **=** *AssignmentExpression* is evaluated as follows:

1. Evaluate *AssignmentExpression*.
2. Return Result(1).

The *VariableDeclarationListNoIn*, *VariableDeclarationNoIn* and *InitialiserNoIn* productions are evaluated in the same manner as the *VariableDeclarationList*, *VariableDeclaration* and *Initialiser* productions except that the contained *VariableDeclarationListNoIn*, *VariableDeclarationNoIn*, *InitialiserNoIn* and *AssignmentExpressionNoIn* are evaluated instead of the contained *VariableDeclarationList*, *VariableDeclaration*, *Initialiser* and *AssignmentExpression*, respectively.

12.3 Empty Statement

Syntax

EmptyStatement **:**
`;`

Semantics

The production *EmptyStatement* **:** **`;`** is evaluated as follows:

1. Return (**normal**, **empty**, **empty**).

12.4 Expression Statement

Syntax

ExpressionStatement **:**
[lookahead ∉ {**`{`**, **`function`**}] *Expression* **`;`**

© ISO/IEC 2002 – All rights reserved

Copyright International Organization for Standardization
Provided by IHS under license with ISO
No reproduction or networking permitted without license from IHS
Not for Resale

Note that an *ExpressionStatement* cannot start with an opening curly brace because that might make it ambiguous with a *Block*. Also, an *ExpressionStatement* cannot start with the **function** keyword because that might make it ambiguous with a *FunctionDeclaration*.

Semantics

The production *ExpressionStatement* **:** [lookahead ∉ {**{, function**}] *Expression* **;** is evaluated as follows:

1. Evaluate *Expression*.
2. Call GetValue(Result(1)).
3. Return (**normal**, Result(2), **empty**).

12.5 The `if` Statement

Syntax

IfStatement **:**
if (*Expression* **)** *Statement* **else** *Statement*
if (*Expression* **)** *Statement*

Each **else** for which the choice of associated **if** is ambiguous shall be associated with the nearest possible **if** that would otherwise have no corresponding **else**.

Semantics

The production *IfStatement* **: if (** *Expression* **)** *Statement* **else** *Statement* is evaluated as follows:

1. Evaluate *Expression*.
2. Call GetValue(Result(1)).
3. Call ToBoolean(Result(2)).
4. If Result(3) is **false**, go to step 7.
5. Evaluate the first *Statement*.
6. Return Result(5).
7. Evaluate the second *Statement*.
8. Return Result(7).

The production *IfStatement* **: if (** *Expression* **)** *Statement* is evaluated as follows:

1. Evaluate *Expression*.
2. Call GetValue(Result(1)).
3. Call ToBoolean(Result(2)).
4. If Result(3) is **false**, return (**normal**, **empty**, **empty**).
5. Evaluate *Statement*.
6. Return Result(5).

12.6 Iteration Statements

An iteration statement consists of a *header* (which consists of a keyword and a parenthesised control construct) and a *body* (which consists of a *Statement*).

Syntax

IterationStatement **:**
do *Statement* **while (** *Expression* **);**
while (*Expression* **)** *Statement*
for (*ExpressionNoIn*$_{opt}$**;** *Expression*$_{opt}$ **;** *Expression*$_{opt}$ **)** *Statement*
for (var *VariableDeclarationListNoIn***;** *Expression*$_{opt}$ **;** *Expression*$_{opt}$ **)** *Statement*
for (*LeftHandSideExpression* **in** *Expression* **)** *Statement*
for (var *VariableDeclarationNoIn* **in** *Expression* **)** *Statement*

© ISO/IEC 2002 – All rights reserved
Copyright International Organization for Standardization
Provided by IHS under license with ISO
No reproduction or networking permitted without license from IHS
Not for Resale

12.6.1 The `do-while` Statement

The production **`do`** *Statement* **`while (`** *Expression* **`);`** is evaluated as follows:

1. Let *V* = **empty**.
2. Evaluate *Statement*.
3. If Result(2).value is not **empty**, let *V* = Result(2).value.
4. If Result(2).type is **continue** and Result(2).target is in the current label set, go to step 7.
5. If Result(2).type is **break** and Result(2).target is in the current label set, return (**normal**, *V*, **empty**).
6. If Result(2) is an abrupt completion, return Result(2).
7. Evaluate *Expression*.
8. Call GetValue(Result(7)).
9. Call ToBoolean(Result(8)).
10. If Result(9) is **true**, go to step 2.
11. Return (**normal**, *V*, **empty**);

12.6.2 The `while` statement

The production *IterationStatement* **`: while (`** *Expression* **`)`** *Statement* is evaluated as follows:

1. Let *V* = **empty**.
2. Evaluate *Expressio*n.
3. Call GetValue(Result(2)).
4. Call ToBoolean(Result(3)).
5. If Result(4) is **false**, return (**normal**, *V*, **empty**).
6. Evaluate *Statement*.
7. If Result(6).value is not **empty**, let *V* = Result(6).value.
8. If Result(6).type is **continue** and Result(6).target is in the current label set, go to 2.
9. If Result(6).type is **break** and Result(6).target is in the current label set, return (**normal**, *V*, **empty**).
10. If Result(6) is an abrupt completion, return Result(6).
11. Go to step 2.

12.6.3 The `for` Statement

The production *IterationStatement* **`: for (`***ExpressionNoIn*$_{opt}$ **`;`** *Expression*$_{opt}$ **`;`** *Expression*$_{opt}$**`)`** *Statement* is evaluated as follows:

1. If *ExpressionNoIn* is not present, go to step 4.
2. Evaluate *ExpressionNoIn*.
3. Call GetValue(Result(2)). (This value is not used.)
4. Let *V* = **empty**.
5. If the first *Expression* is not present, go to step 10.
6. Evaluate the first *Expressio*n.
7. Call GetValue(Result(6)).
8. Call ToBoolean(Result(7)).
9. If Result(8) is **false**, go to step 19.
10. Evaluate *Statement*.
11. If Result(10).value is not **empty**, let *V* = Result(10).value
12. If Result(10).type is **break** and Result(10).target is in the current label set, go to step 19.
13. If Result(10).type is **continue** and Result(10).target is in the current label set, go to step 15.
14. If Result(10) is an abrupt completion, return Result(10).
15. If the second *Expression* is not present, go to step 5.
16. Evaluate the second *Expressio*n.
17. Call GetValue(Result(16). (This value is not used.)
18. Go to step 5.
19. Return (**normal**, *V*, **empty**).

© ISO/IEC 2002 – All rights reserved

Copyright International Organization for Standardization
Provided by IHS under license with ISO
No reproduction or networking permitted without license from IHS
Not for Resale

The production *IterationStatement* **: for (var** *VariableDeclarationListNoIn* **;** *Expression*$_{opt}$ **;** *Expression*$_{opt}$ **)** *Statement* is evaluated as follows:

1. Evaluate *VariableDeclarationListNoIn*.
2. Let V = **empty**.
3. If the first *Expression* is not present, go to step 8.
4. Evaluate the first *Expression*.
5. Call GetValue(Result(4)).
6. Call ToBoolean(Result(5)).
7. If Result(6) is **false**, go to step 17.
8. Evaluate *Statement*.
9. If Result(8).value is not **empty**, let V = Result(8).value.
10. If Result(8).type is **break** and Result(8).target is in the current label set, go to step 17.
11. If Result(8).type is **continue** and Result(8).target is in the current label set, go to step 13.
12. If Result(8) is an abrupt completion, return Result(8).
13. If the second *Expression* is not present, go to step 3.
14. Evaluate the second *Expression*.
15. Call GetValue(Result(14)). (This value is not used.)
16. Go to step 3.
17. Return (**normal**, V, **empty**).

12.6.4 The `for-in` Statement

The production *IterationStatement* **: for (** *LeftHandSideExpression* **in** *Expression* **)** *Statement* is evaluated as follows:

1. Evaluate the *Expression*.
2. Call GetValue(Result(1)).
3. Call ToObject(Result(2)).
4. Let *V* = **empty**.
5. Get the name of the next property of Result(3) that doesn't have the DontEnum attribute. If there is no such property, go to step 14.
6. Evaluate the *LeftHandSideExpression* (it may be evaluated repeatedly).
7. Call PutValue(Result(6), Result(5)).
8. Evaluate *Statement*.
9. If Result(8).value is not **empty**, let *V* = Result(8).value.
10. If Result(8).type is **break** and Result(8).target is in the current label set, go to step 14.
11. If Result(8).type is **continue** and Result(8).target is in the current label set, go to step 5.
12. If Result(8) is an abrupt completion, return Result(8).
13. Go to step 5.
14. Return (**normal**, *V*, **empty**).

The production *IterationStatement* **: for (var** *VariableDeclarationNoIn* **in** *Expression* **)** *Statement* is evaluated as follows:

1. Evaluate *VariableDeclarationNoIn*.
2. Evaluate *Expression*.
3. Call GetValue(Result(2)).
4. Call ToObject(Result(3)).
5. Let V = **empty**.
6. Get the name of the next property of Result(4) that doesn't have the DontEnum attribute. If there is no such property, go to step 15.
7. Evaluate Result(1) as if it were an Identifier; see 11.1.2 (yes, it may be evaluated repeatedly).
8. Call PutValue(Result(7), Result(6)).
9. Evaluate *Statement*.
10. If Result(9).value is not **empty**, let V = Result(9).value.
11. If Result(9).type is **break** and Result(9).target is in the current label set, go to step 15.
12. If Result(9).type is **continue** and Result(9).target is in the current label set, go to step 6.
13. If Result(8) is an abrupt completion, return Result(8).

© ISO/IEC 2002 – All rights reserved
Copyright International Organization for Standardization
Provided by IHS under license with ISO
No reproduction or networking permitted without license from IHS
Not for Resale

14. Go to step 6.
15. Return (**normal**, V, **empty**).

The mechanics of enumerating the properties (step 5 in the first algorithm, step 6 in the second) is implementation dependent. The order of enumeration is defined by the object. Properties of the object being enumerated may be deleted during enumeration. If a property that has not yet been visited during enumeration is deleted, then it will not be visited. If new properties are added to the object being enumerated during enumeration, the newly added properties are not guaranteed to be visited in the active enumeration.

Enumerating the properties of an object includes enumerating properties of its prototype, and the prototype of the prototype, and so on, recursively; but a property of a prototype is not enumerated if it is "shadowed" because some previous object in the prototype chain has a property with the same name.

12.7 The `continue` Statement

Syntax

ContinueStatement **:**
`continue` [no *LineTerminator* here] *Identifier*$_{opt}$ **`;`**

Semantics

A program is considered syntactically incorrect if either of the following are true:

- The program contains a **`continue`** statement without the optional *Identifier*, which is not nested, directly or indirectly (but not crossing function boundaries), within an *IterationStatement*.
- The program contains a **`continue`** statement with the optional *Identifier*, where *Identifier* does not appear in the label set of an enclosing (but not crossing function boundaries) *IterationStatement*.

A *ContinueStatement* without an *Identifier* is evaluated as follows:

1. Return (**continue**, **empty**, **empty**).

A *ContinueStatement* with the optional *Identifier* is evaluated as follows:

1. Return (**continue**, **empty**, *Identifier*).

12.8 The `break` Statement

Syntax

BreakStatement **:**
`break` [no *LineTerminator* here] *Identifier*$_{opt}$ **`;`**

Semantics

A program is considered syntactically incorrect if either of the following are true:

- The program contains a **`break`** statement without the optional *Identifier*, which is not nested, directly or indirectly (but not crossing function boundaries), within an *IterationStatement* or a *SwitchStatement*.
- The program contains a **`break`** statement with the optional *Identifier*, where *Identifier* does not appear in the label set of an enclosing (but not crossing function boundaries) *Statement*.

A *BreakStatement* without an *Identifier* is evaluated as follows:

1. Return (**break**, **empty**, **empty**).

A *BreakStatement* with an *Identifier* is evaluated as follows:

1. Return (**break**, **empty**, *Identifier*).

--`,,```,,,,````-`-`,,`,,`,`,,`---
© ISO/IEC 2002 – All rights reserved

Copyright International Organization for Standardization
Provided by IHS under license with ISO
No reproduction or networking permitted without license from IHS
Not for Resale

12.9 The `return` Statement

Syntax

ReturnStatement **:**
`return` [no *LineTerminator* here] *Expression*$_{opt}$ **`;`**

Semantics

An ECMAScript program is considered syntactically incorrect if it contains a **`return`** statement that is not within a *FunctionBody*. A **`return`** statement causes a function to cease execution and return a value to the caller. If *Expression* is omitted, the return value is **undefined**. Otherwise, the return value is the value of *Expression*.

The production *ReturnStatement* **:** **`return`** [no *LineTerminator* here] *Expression*$_{opt}$ **`;`** is evaluated as:

1. If the *Expression* is not present, return (**return**, **undefined**, **empty**).
2. Evaluate *Expression*.
3. Call GetValue(Result(2)).
4. Return (**return**, Result(3), **empty**).

12.10 The `with` Statement

Syntax

WithStatement **:**
`with (` *Expression* **`)`** *Statement*

Description

The **`with`** statement adds a computed object to the front of the scope chain of the current execution context, then executes a statement with this augmented scope chain, then restores the scope chain.

Semantics

The production *WithStatement* **:** **`with (`** *Expression* **`)`** *Statement* is evaluated as follows:

1. Evaluate *Expression*.
2. Call GetValue(Result(1)).
3. Call ToObject(Result(2)).
4. Add Result(3) to the front of the scope chain.
5. Evaluate *Statement* using the augmented scope chain from step 4.
6. Let *C* be Result(5). If an exception was thrown in step 5, let *C* be (**throw**, *V*, **empty**), where *V* is the exception. (Execution now proceeds as if no exception were thrown.)
7. Remove Result(3) from the front of the scope chain.
8. Return *C*.

NOTE No matter how control leaves the embedded *Statement*, whether normally or by some form of abrupt completion or exception, the scope chain is always restored to its former state.

12.11 The `switch` Statement

Syntax

SwitchStatement **:**
`switch (` *Expression* **`)`** *CaseBlock*

CaseBlock **:**
`{` *CaseClauses*$_{opt}$ **`}`**
`{` *CaseClauses*$_{opt}$ *DefaultClause CaseClauses*$_{opt}$ **`}`**

--`,,```,,,,````-`-`,,`,,`,`,,`---

© ISO/IEC 2002 – All rights reserved
Copyright International Organization for Standardization
Provided by IHS under license with ISO
No reproduction or networking permitted without license from IHS
Not for Resale

CaseClauses **:**
CaseClause
CaseClauses CaseClause

CaseClause **:**
`case` *Expression* **`:`** *StatementList*$_{opt}$

DefaultClause **:**
`default :` *StatementList*$_{opt}$

Semantics

The production *SwitchStatement* **`: switch (`** *Expression* **`)`** *CaseBlock* is evaluated as follows:

1. Evaluate *Expression*.
2. Call GetValue(Result(1)).
3. Evaluate *CaseBlock*, passing it Result(2) as a parameter.
4. If Result(3).type is **break** and Result(3).target is in the current label set, return (**normal**, Result(3).value, **empty**).
5. Return Result(3).

The production *CaseBlock* **`: {`** *CaseClauses*$_{opt}$ **`}`** is given an input parameter, *input*, and is evaluated as follows:

1. Let *V* = **empty**.
2. Let *A* be the list of *CaseClause* items in source text order.
3. Let *C* be the next *CaseClause* in *A*. If there is no such *CaseClause*, then go to step 16.
4. Evaluate *C*.
5. If *input* is not equal to Result(4) as defined by the **!==** operator, then go to step 3.
6. If *C* does not have a *StatementList*, then go to step 10.
7. Evaluate *C*'s *StatementList* and let *R* be the result.
8. If *R* is an abrupt completion, then return *R*.
9. Let *V* = *R*.value.
10. Let *C* be the next *CaseClause* in *A*. If there is no such *CaseClause*, then go to step 16.
11. If *C* does not have a *StatementList*, then go to step 10.
12. Evaluate *C*'s *StatementList* and let *R* be the result.
13. If *R*.value is not empty, then let *V* = *R*.value.
14. If *R* is an abrupt completion, then return (*R*.type, *V*, *R*.target).
15. Go to step 10.
16. Return (normal, *V*, **empty**).

The production *CaseBlock* **`: {`** *CaseClauses*$_{opt}$ *DefaultClause* *CaseClauses*$_{opt}$ **`}`** is given an input parameter, *input*, and is evaluated as follows:

1. Let *V* = **empty**.
2. Let *A* be the list of *CaseClause* items in the first *CaseClauses*, in source text order.
3. Let *C* be the next *CaseClause* in *A*. If there is no such *CaseClause*, then go to step 11.
4. Evaluate *C*.
5. If *input* is not equal to Result(4) as defined by the **!==** operator, then go to step 3.
6. If *C* does not have a *StatementList*, then go to step 20.
7. Evaluate *C*'s *StatementList* and let *R* be the result.
8. If *R* is an abrupt completion, then return *R*.
9. Let *V* = *R*.value.
10. Go to step 20.
11. Let *B* be the list of *CaseClause* items in the second *CaseClauses*, in source text order.
12. Let *C* be the next *CaseClause* in *B*. If there is no such *CaseClause*, then go to step 26.
13. Evaluate *C*.
14. If *input* is not equal to Result(13) as defined by the **!==** operator, then go to step 12.
15. If *C* does not have a *StatementList*, then go to step 31.
16. Evaluate *C*'s *StatementList* and let *R* be the result.

© ISO/IEC 2002 – All rights reserved

Copyright International Organization for Standardization
Provided by IHS under license with ISO
No reproduction or networking permitted without license from IHS
Not for Resale

17. If *R* is an abrupt completion, then return *R*.
18. Let *V* = *R*.value.
19. Go to step 31.
20. Let *C* be the next *CaseClause* in *A*. If there is no such *CaseClause*, then go to step 26.
21. If *C* does not have a *StatementList*, then go to step 20.
22. Evaluate *C*'s *StatementList* and let *R* be the result.
23. If *R*.value is not empty, then let *V* = *R*.value.
24. If *R* is an abrupt completion, then return (*R*.type, *V*, *R*.target).
25. Go to step 20.
26. If the *DefaultClause* does not have a *StatementList*, then go to step 30.
27. Evaluate the *DefaultClause*'s *StatementList* and let *R* be the result.
28. If *R*.value is not **empty**, then let *V* = *R*.value.
29. If *R* is an abrupt completion, then return (*R*.type, *V*, *R*.target).
30. Let *B* be the list of *CaseClause* items in the second *CaseClauses*, in source text order.
31. Let *C* be the next *CaseClause* in *B*. If there is no such *CaseClause*, then go to step 37.
32. If *C* does not have a *StatementList*, then go to step 31.
33. Evaluate *C*'s *StatementList* and let *R* be the result.
34. If *R*.value is not **empty**, then let *V* = *R*.value.
35. If *R* is an abrupt completion, then return (*R*.type, *V*, *R*.target).
36. Go to step 31.
37. Return (normal, *V*, **empty**).

The production *CaseClause* **: `case`** *Expression* **:** *StatementList*$_{opt}$ is evaluated as follows:

1. Evaluate *Expression*.
2. Call GetValue(Result(1)).
3. Return Result(2).

NOTE Evaluating *CaseClause* does not execute the associated *StatementList*. It simply evaluates the *Expression* and returns the value, which the *CaseBlock* algorithm uses to determine which *StatementList* to start executing.

12.12 Labelled Statements

Syntax

LabelledStatement **:**
Identifier **:** *Statement*

Semantics

A *Statement* may be prefixed by a label. Labelled statements are only used in conjunction with labelled **`break`** and **`continue`** statements. ECMAScript has no **`goto`** statement.

An ECMAScript program is considered syntactically incorrect if it contains a *LabelledStatement* that is enclosed by a *LabelledStatement* with the same *Identifier* as label. This does not apply to labels appearing within the body of a *FunctionDeclaration* that is nested, directly or indirectly, within a labelled statement.

The production *Identifier* **:** *Statement* is evaluated by adding *Identifier* to the label set of *Statement* and then evaluating *Statement*. If the *LabelledStatement* itself has a non-empty label set, these labels are also added to the label set of *Statement* before evaluating it. If the result of evaluating *Statement* is (**break**, *V*, *L*) where *L* is equal to *Identifier*, the production results in (**normal**, *V*, **empty**).

Prior to the evaluation of a *LabelledStatement*, the contained *Statement* is regarded as possessing an empty label set, except if it is an *IterationStatement* or a *SwitchStatement*, in which case it is regarded as possessing a label set consisting of the single element, **empty**.

12.13 The **`throw`** statement

Syntax

--`,,```,,,,````-`-`,,`,,`,`,,`---
Copyright International Organization for Standardization
Provided by IHS under license with ISO
No reproduction or networking permitted without license from IHS
© ISO/IEC 2002 – All rights reserved
Not for Resale

ThrowStatement **:**
throw [no *LineTerminator* here] *Expression ;*

Semantics

The production *ThrowStatement* **:** ***throw*** [no *LineTerminator* here] *Expression ;* is evaluated as:

1. Evaluate *Expression*.
2. Call GetValue(Result(1)).
3. Return (**throw**, Result(2), **empty**).

12.14 The `try` statement

Syntax

TryStatement **:**
try *Block Catch*
try *Block Finally*
try *Block Catch Finally*

Catch **:**
catch (*Identifier* **)** *Block*

Finally **:**
finally *Block*

Description

The **try** statement encloses a block of code in which an exceptional condition can occur, such as a runtime error or a **throw** statement. The **catch** clause provides the exception-handling code. When a catch clause catches an exception, its *Identifier* is bound to that exception.

Semantics

The production *TryStatement* **: try** *Block Catch* is evaluated as follows:

1. Evaluate *Block*.
2. If Result(1).type is not **throw**, return Result(1).
3. Evaluate *Catch* with parameter Result(1).
4. Return Result(3).

The production *TryStatement* **: try** *Block Finally* is evaluated as follows:

1. Evaluate *Block*.
2. Evaluate *Finally*.
3. If Result(2) .*type* is **normal**, return Result(1).
4. Return Result(2).

The production *TryStatement* **: try** *Block Catch Finally* is evaluated as follows:

1. Evaluate *Block*.
2. Let *C* = Result(1).
3. If Result(1).type is not **throw**, go to step 6.
4. Evaluate *Catch* with parameter Result(1).
5. Let *C* = Result(4).
6. Evaluate *Finally*.
7. If Result(6).type is **normal**, return *C*.
8. Return Result(6).

© ISO/IEC 2002 – All rights reserved

Copyright International Organization for Standardization
Provided by IHS under license with ISO
No reproduction or networking permitted without license from IHS
Not for Resale

The production *Catch* **: catch (***Identifier* **)** *Block* is evaluated as follows:

1. Let *C* be the parameter that has been passed to this production.
2. Create a new object as if by the expression **new Object()**.
3. Create a property in the object Result(2). The property's name is *Identifier*, value is *C*.value, and attributes are { DontDelete }.
4. Add Result(2) to the front of the scope chain.
5. Evaluate *Block*.
6. Remove Result(2) from the front of the scope chain.
7. Return Result(5).

The production *Finally* **: finally** *Block* is evaluated as follows:

1. Evaluate *Block*.
2. Return Result(1).

13 Function Definition

Syntax

FunctionDeclaration **:**
function *Identifier* **(** $FormalParameterList_{opt}$ **) {** *FunctionBody* **}**

FunctionExpression **:**
function $Identifier_{opt}$ **(** $FormalParameterList_{opt}$ **) {** *FunctionBody* **}**

FormalParameterList **:**
Identifier
FormalParameterList **,** *Identifier*

FunctionBody **:**
SourceElements

Semantics

The production *FunctionDeclaration* **: function** *Identifier* **(** $FormalParameterList_{opt}$ **) {** *FunctionBody* **}** is processed for function declarations as follows:

1. Create a new Function object as specified in section 13.2 with parameters specified by *FormalParameterList*, and body specified by *FunctionBody*. Pass in the scope chain of the running execution context as the *Scope*.
2. Create a property of the current variable object (as specified in section 10.1.3) with name *Identifier* and value Result(1).

The production *FunctionExpression* **: function (** $FormalParameterList_{opt}$ **) {** *FunctionBody* **}** is evaluated as follows:

1. Create a new Function object as specified in section 13.2 with parameters specified by $FormalParameterList_{opt}$ and body specified by *FunctionBody*. Pass in the scope chain of the running execution context as the *Scope*.
2. Return Result(2).

The production *FunctionExpression* **: function** *Identifier* **(** $FormalParameterList_{opt}$ **) {** *FunctionBody* **}** is evaluated as follows:

1. Create a new object as if by the expression **new Object()**.
2. Add Result(1) to the front of the scope chain.
3. Create a new Function object as specified in section 13.2 with parameters specified by $FormalParameterList_{opt}$ and body specified by *FunctionBody*. Pass in the scope chain of the running execution context as the *Scope*.
4. Create a property in the object Result(1). The property's name is *Identifier*, value is Result(3), and attributes are { DontDelete, ReadOnly }.

--`,,```,,,,````-`-`,,`,,`,`,,`---
Copyright International Organization for Standardization
Provided by IHS under license with ISO
No reproduction or networking permitted without license from IHS
© ISO/IEC 2002 – All rights reserved
Not for Resale

5. Remove Result(1) from the front of the scope chain.
6. Return Result(3).

NOTE The *Identifier* in a *FunctionExpression* can be referenced from inside the *FunctionExpression*'s *FunctionBody* to allow the function to call itself recursively. However, unlike in a *FunctionDeclaration*, the *Identifier* in a *FunctionExpression* cannot be referenced from and does not affect the scope enclosing the *FunctionExpression*.

The production *FunctionBody* **:** *SourceElements* is evaluated as follows:

1. Process *SourceElements* for function declarations.
2. Evaluate *SourceElements*.
3. Return Result(2).

13.1 Definitions

A couple of definitions are needed to describe the process of creating function objects:

13.1.1 Equated Grammar Productions

Two uses of the *FunctionBody* grammar production are defined to be *equated* when one of the following is true:

- Both uses obtained their *FunctionBody* from the same location in the source text of the same ECMAScript program. This source text consists of global code and any contained function codes according to the definitions in section 10.1.2.
- Both uses obtained their *FunctionBody* from the same location in the source text of the same call to **`eval`** (section 15.1.2.1). This source text consists of eval code and any contained function codes according to the definitions in section 10.1.2.

NOTE Two uses of *FunctionBody* obtained from a call to the **`Function`** constructor (sections 15.3.1 and 15.3.2) are never equated. Also, two uses of *FunctionBody* obtained from two different calls to **`eval`** are never equated, even if those two calls to **`eval`** were passed the same argument.

13.1.2 Joined Objects

When two or more Function objects are *joined*, they have the following special behaviours:

- Any time a non-internal property of an object *O* is created or set, the corresponding property is immediately also created or set with the same value and attributes in all objects joined with *O*.
- Any time a non-internal property of an object *O* is deleted, the corresponding property is immediately also deleted in all objects joined with *O*.
- If objects *O* and *P* are joined, they compare as **==** and **===** to each other.
- Joining is transitive and symmetric, so that if objects *O* and *P* are joined and objects *P* and *Q* are joined, then objects *O* and *Q* are also automatically joined.

NOTE Two or more objects joined to each other are effectively indistinguishable except that they may have different internal properties. The only such internal property that may differ in this specification is [[Scope]].

Joined objects are used as a tool for precise specification technique in this standard. They are not meant to be used as a guideline to how Function objects are implemented in practice. Rather, in practice an implementation may detect when the differences in the [[Scope]] properties of two or more joined Function objects are not externally observable and in those cases reuse the same Function object rather than making a set of joined Function objects. This is a legal optimisation because this standard only specifies observable behaviour of ECMAScript programs.

13.2 Creating Function Objects

Given an optional parameter list specified by *FormalParameterList*, a body specified by *FunctionBody*, and a scope chain specified by *Scope*, a Function object is constructed as follows:

1. If there already exists an object *E* that was created by an earlier call to this section's algorithm, and if that call to this section's algorithm was given a *FunctionBody* that is equated to the *FunctionBody* given now, then go to

© ISO/IEC 2002 – All rights reserved

Copyright International Organization for Standardization
Provided by IHS under license with ISO
No reproduction or networking permitted without license from IHS
Not for Resale

step 13. (If there is more than one object *E* satisfying these criteria, choose one at the implementation's discretion.)
2. Create a new native ECMAScript object and let *F* be that object.
3. Set the [[Class]] property of *F* to **"Function"**.
4. Set the [[Prototype]] property of *F* to the original Function prototype object as specified in section 15.3.3.1.
5. Set the [[Call]] property of *F* as described in section 13.2.1.
6. Set the [[Construct]] property of *F* as described in section 13.2.2.
7. Set the [[Scope]] property of *F* to a new scope chain (section 10.1.4) that contains the same objects as *Scope*.
8. Set the **length** property of *F* to the number of formal properties specified in *FormalParameterList*. If no parameters are specified, set the **length** property of *F* to 0. This property is given attributes as specified in section 15.3.5.1.
9. Create a new object as would be constructed by the expression **new Object()**.
10. Set the **constructor** property of Result(9) to *F*. This property is given attributes { DontEnum }.
11. Set the **prototype** property of *F* to Result(9). This property is given attributes as specified in section 15.3.5.2.
12. Return *F*.
13. At the implementation's discretion, go to either step 2 or step 14.
14. Create a new native ECMAScript object joined to *E* and let *F* be that object. Copy all non-internal properties and their attributes from *E* to *F* so that all non-internal properties are identical in *E* and *F*.
15. Set the [[Class]] property of *F* to **"Function"**.
16. Set the [[Prototype]] property of *F* to the original Function prototype object as specified in section 15.3.3.1.
17. Set the [[Call]] property of *F* as described in section 13.2.1.
18. Set the [[Construct]] property of *F* as described in section 13.2.2.
19. Set the [[Scope]] property of *F* to a new scope chain (section 10.1.4) that contains the same objects as *Scope*.
20. Return *F*.

NOTE A **prototype** property is automatically created for every function, to allow for the possibility that the function will be used as a constructor.

Step 1 allows an implementation to optimise the common case of a function *A* that has a nested function *B* where *B* is not dependent on *A*. In this case the implementation is allowed to reuse the same object for *B* instead of creating a new one every time *A* is called. Step 13 makes this optimisation optional; an implementation that chooses not to implement it will go to step 2.

For example, in the code

```
function A() {
  function B(x) {return x*x;}
  return B;
}

function C() {
  return eval("(function (x) {return x*x;})");
}

var b1 = A();
var b2 = A();
function  b3(x) {return x*x;}
function  b4(x) {return x*x;}
var b5 = C();
var b6 = C();
```

an implementation is allowed, but not required, to join **b1** and **b2**. In fact, it may make **b1** and **b2** the same object because there is no way to detect the difference between their [[Scope]] properties. On the other hand, an implementation must not join **b3** and **b4** because their source codes are not equated (section 13.1.1). Also, an implementation must not join **b5** and **b6** because they were produced by two different calls to **eval** and therefore their source codes are not equated.

In practice it's likely to be productive to join two Function objects only in the cases where an implementation can prove that the differences between their [[Scope]] properties are not observable, so one object can be reused. By following this policy, an implementation will only encounter the vacuous case of an object being joined with itself.

© ISO/IEC 2002 – All rights reserved
Copyright International Organization for Standardization
Provided by IHS under license with ISO
No reproduction or networking permitted without license from IHS
Not for Resale

13.2.1 [[Call]]

When the [[Call]] property for a Function object *F* is called, the following steps are taken:

1. Establish a new execution context using *F*'s *FormalParameterList*, the passed arguments list, and the **this** value as described in Section 10.2.3.
2. Evaluate *F*'s *FunctionBody*.
3. Exit the execution context established in step 1, restoring the previous execution context.
4. If Result(2).type is **throw** then throw Result(2).value.
5. If Result(2).type is **return** then return Result(2).value.
6. (Result(2).type must be **normal**.) Return **undefined**.

13.2.2 [[Construct]]

When the [[Construct]] property for a Function object *F* is called, the following steps are taken:

Create a new native ECMAScript object.
Set the [[Class]] property of Result(1) to **`"Object"`**.
Get the value of the **`prototype`** property of the *F*.
If Result(3) is an object, set the [[Prototype]] property of Result(1) to Result(3).
If Result(3) is not an object, set the [[Prototype]] property of Result(1) to the original Object prototype object as described in section 15.2.3.1.
Invoke the [[Call]] property of *F*, providing Result(1) as the **this** value and providing the argument list passed into [[Construct]] as the argument values.
If Type(Result(6)) is Object then return Result(6).
Return Result(1).

14 Program

Syntax

Program **:**
SourceElements

SourceElements **:**
SourceElement
SourceElements SourceElement

SourceElement **:**
Statement
FunctionDeclaration

Semantics

The production *Program* **:** *SourceElements* is evaluated as follows:

1. Process *SourceElements* for function declarations.
2. Evaluate *SourceElements*.
3. Return Result(2).

The production *SourceElements* **:** *SourceElement* is processed for function declarations as follows:

1. Process *SourceElement* for function declarations.

The production *SourceElements* **:** *SourceElement* is evaluated as follows:

1. Evaluate *SourceElement*.
2. Return Result(1).

--`,,```,,,,````-`-`,,`,,`,`,,`---
© ISO/IEC 2002 – All rights reserved

Copyright International Organization for Standardization
Provided by IHS under license with ISO
No reproduction or networking permitted without license from IHS
Not for Resale

The production *SourceElements* **:** *SourceElements SourceElement* is processed for function declarations as follows:

1. Process *SourceElements* for function declarations.
2. Process *SourceElement* for function declarations.

The production *SourceElements* **:** *SourceElements SourceElement* is evaluated as follows:

1. Evaluate *SourceElements*.
2. If Result(1) is an abrupt completion, return Result(1)
3. Evaluate *SourceElement*.
4. Return Result(3).

The production *SourceElement* **:** *Statement* is processed for function declarations by taking no action.

The production *SourceElement* **:** *Statement* is evaluated as follows:

1. Evaluate *Statement*.
2. Return Result(1).

The production *SourceElement* **:** *FunctionDeclaration* is processed for function declarations as follows:

1. Process *FunctionDeclaration* for function declarations (see section 13).

The production *SourceElement* **:** *FunctionDeclaration* is evaluated as follows:

1. Return (**normal**, **empty**, **empty**).

15 Native ECMAScript Objects

There are certain built-in objects available whenever an ECMAScript program begins execution. One, the global object, is in the scope chain of the executing program. Others are accessible as initial properties of the global object.

Unless specified otherwise, the [[Class]] property of a built-in object is **`"Function"`** if that built-in object has a [[Call]] property, or **`"Object"`** if that built-in object does not have a [[Call]] property.

Many built-in objects are functions: they can be invoked with arguments. Some of them furthermore are constructors: they are functions intended for use with the **`new`** operator. For each built-in function, this specification describes the arguments required by that function and properties of the Function object. For each built-in constructor, this specification furthermore describes properties of the prototype object of that constructor and properties of specific object instances returned by a **`new`** expression that invokes that constructor.

Unless otherwise specified in the description of a particular function, if a function or constructor described in this section is given fewer arguments than the function is specified to require, the function or constructor shall behave exactly as if it had been given sufficient additional arguments, each such argument being the **undefined** value.

Unless otherwise specified in the description of a particular function, if a function or constructor described in this section is given more arguments than the function is specified to allow, the behaviour of the function or constructor is undefined. In particular, an implementation is permitted (but not required) to throw a **TypeError** exception in this case.

NOTE Implementations that add additional capabilities to the set of built-in functions are encouraged to do so by adding new functions rather than adding new parameters to existing functions.

Every built-in function and every built-in constructor has the Function prototype object, which is the initial value of the expression **`Function.prototype`** (section 15.3.2.1), as the value of its internal [[Prototype]] property.

--`,,```,,,,````-`-`,,`,,`,`,,`---

© ISO/IEC 2002 – All rights reserved
Copyright International Organization for Standardization
Provided by IHS under license with ISO
No reproduction or networking permitted without license from IHS
Not for Resale

Every built-in prototype object has the Object prototype object, which is the initial value of the expression **`Object.prototype`** (section 15.2.3.1), as the value of its internal [[Prototype]] property, except the Object prototype object itself.

None of the built-in functions described in this section shall implement the internal [[Construct]] method unless otherwise specified in the description of a particular function. None of the built-in functions described in this section shall initially have a **`prototype`** property unless otherwise specified in the description of a particular function. Every built-in Function object described in this section—whether as a constructor, an ordinary function, or both—has a **`length`** property whose value is an integer. Unless otherwise specified, this value is equal to the largest number of named arguments shown in the section headings for the function description, including optional parameters.

NOTE For example, the Function object that is the initial value of the **`slice`** property of the String prototype object is described under the section heading "**String.prototype.slice (start , end)**" which shows the two named arguments *start* and *end*; therefore the value of the **`length`** property of that Function object is **`2`**.

In every case, the **`length`** property of a built-in Function object described in this section has the attributes { ReadOnly, DontDelete, DontEnum } (and no others). Every other property described in this section has the attribute { DontEnum } (and no others) unless otherwise specified.

15.1 The Global Object

The global object does not have a [[Construct]] property; it is not possible to use the global object as a constructor with the **`new`** operator.

The global object does not have a [[Call]] property; it is not possible to invoke the global object as a function.

The values of the [[Prototype]] and [[Class]] properties of the global object are implementation-dependent.

15.1.1 Value Properties of the Global Object

15.1.1.1 NaN

The initial value of **`NaN`** is **NaN** (section 8.5). This property has the attributes { DontEnum, DontDelete}.

15.1.1.2 Infinity

The initial value of **`Infinity`** is **+∞** (section 8.5). This property has the attributes { DontEnum, DontDelete}.

15.1.1.3 undefined

The initial value of **`undefined`** is **undefined** (section 8.1). This property has the attributes { DontEnum, DontDelete}.

15.1.2 Function Properties of the Global Object

15.1.2.1 eval (x)

When the **`eval`** function is called with one argument *x*, the following steps are taken:

1. If *x* is not a string value, return *x*.
2. Parse *x* as a *Program*. If the parse fails, throw a **SyntaxError** exception (but see also section 16).
3. Evaluate the program from step 2.
4. If Result(3).type is **normal** and its completion value is a value *V*, then return the value *V*.
5. If Result(3).type is **normal** and its completion value is **empty**, then return the value **undefined**.
6. Result(3).type must be **throw**. Throw Result(3).value as an exception.

If value of the **`eval`** property is used in any way other than a direct call (that is, other than by the explicit use of its name as an *Identifier* which is the *MemberExpression* in a *CallExpression*), or if the **`eval`** property is assigned to, an **EvalError** exception may be thrown.

© ISO/IEC 2002 – All rights reserved

Copyright International Organization for Standardization
Provided by IHS under license with ISO
No reproduction or networking permitted without license from IHS
Not for Resale

15.1.2.2 parseInt (string , radix)

The **parseInt** function produces an integer value dictated by interpretation of the contents of the *string* argument according to the specified *radix*. Leading whitespace in the string is ignored. If *radix* is **undefined** or 0, it is assumed to be 10 except when the number begins with the character pairs **0x** or **0X**, in which case a radix of 16 is assumed. Any radix-16 number may also optionally begin with the character pairs **0x** or **0X**.

When the **parseInt** function is called, the following steps are taken:

1. Call ToString(*string*).
2. Let *S* be a newly created substring of Result(1) consisting of the first character that is not a *StrWhiteSpaceChar* and all characters following that character. (In other words, remove leading white space.)
3. Let *sign* be 1.
4. If *S* is not empty and the first character of *S* is a minus sign **-**, let *sign* be −1.
5. If *S* is not empty and the first character of *S* is a plus sign **+** or a minus sign **-**, then remove the first character from *S*.
6. Let *R* = ToInt32(*radix*).
7. If *R* = 0, go to step 11.
8. If *R* < 2 or *R* > 36, then return **NaN**.
9. If *R* = 16, go to step 13.
10. Go to step 14.
11. Let *R* = 10.
12. If the length of *S* is at least 1 and the first character of *S* is "**0**", then at the implementation's discretion either let *R* = 8 or leave *R* unchanged.
13. If the length of *S* is at least 2 and the first two characters of *S* are either "**0x**" or "**0X**", then remove the first two characters from *S* and let *R* = 16.
14. If *S* contains any character that is not a radix-*R* digit, then let *Z* be the substring of *S* consisting of all characters before the first such character; otherwise, let *Z* be *S*.
15. If *Z* is empty, return **NaN**.
16. Compute the mathematical integer value that is represented by *Z* in radix-*R* notation, using the letters **A**-**Z** and **a**-**z** for digits with values 10 through 35. (However, if *R* is 10 and *Z* contains more than 20 significant digits, every significant digit after the 20th may be replaced by a **0** digit, at the option of the implementation; and if *R* is not 2, 4, 8, 10, 16, or 32, then Result(16) may be an implementation-dependent approximation to the mathematical integer value that is represented by *Z* in radix-*R* notation.)
17. Compute the number value for Result(16).
18. Return *sign* × Result(17).

NOTE **parseInt** may interpret only a leading portion of the string as an integer value; it ignores any characters that cannot be interpreted as part of the notation of an integer, and no indication is given that any such characters were ignored.

When *radix* is 0 or **undefined** and the string's number begins with a **0** digit not followed by an **x** or **X**, then the implementation may, at its discretion, interpret the number either as being octal or as being decimal. Implementations are encouraged to interpret numbers in this case as being decimal.

15.1.2.3 parseFloat (string)

The **parseFloat** function produces a number value dictated by interpretation of the contents of the *string* argument as a decimal literal.

When the **parseFloat** function is called, the following steps are taken:

1. Call ToString(*string*).
2. Compute a substring of Result(1) consisting of the leftmost character that is not a *StrWhiteSpaceChar* and all characters to the right of that character.(In other words, remove leading white space.)
3. If neither Result(2) nor any prefix of Result(2) satisfies the syntax of a *StrDecimalLiteral* (see 9.3.1), return **NaN**.
4. Compute the longest prefix of Result(2), which might be Result(2) itself, which satisfies the syntax of a *StrDecimalLiteral*.
5. Return the number value for the MV of Result(4).

© ISO/IEC 2002 – All rights reserved
Copyright International Organization for Standardization
Provided by IHS under license with ISO
No reproduction or networking permitted without license from IHS
Not for Resale

NOTE **parseFloat** may interpret only a leading portion of the string as a number value; it ignores any characters that cannot be interpreted as part of the notation of an decimal literal, and no indication is given that any such characters were ignored.

15.1.2.4 isNaN (number)

Applies ToNumber to its argument, then returns **true** if the result is **NaN**, and otherwise returns **false**.

15.1.2.5 isFinite (number)

Applies ToNumber to its argument, then returns **false** if the result is **NaN**, **+∞**, or **–∞**, and otherwise returns **true**.

15.1.3 URI Handling Function Properties

Uniform Resource Identifiers, or URIs, are strings that identify resources (e.g. web pages or files) and transport protocols by which to access them (e.g. HTTP or FTP) on the Internet. The ECMAScript language itself does not provide any support for using URIs except for functions that encode and decode URIs as described in sections 15.1.3.1, 15.1.3.2, 15.1.3.3 and 15.1.3.4.

NOTE Many implementations of ECMAScript provide additional functions and methods that manipulate web pages; these functions are beyond the scope of this standard.

A URI is composed of a sequence of components separated by component separators. The general form is:

Scheme **:** *First* **/** *Second* **;** *Third* **?** *Fourth*

where the italicised names represent components and the "**:**", "**/**", "**;**" and "**?**" are reserved characters used as separators. The **encodeURI** and **decodeURI** functions are intended to work with complete URIs; they assume that any reserved characters in the URI are intended to have special meaning and so are not encoded. The **encodeURIComponent** and **decodeURIComponent** functions are intended to work with the individual component parts of a URI; they assume that any reserved characters represent text and so must be encoded so that they are not interpreted as reserved characters when the component is part of a complete URI.

The following lexical grammar specifies the form of encoded URIs.

uri **:::**
uriCharacters$_{opt}$

uriCharacters **:::**
uriCharacter uriCharacters$_{opt}$

uriCharacter **:::**
uriReserved
uriUnescaped
uriEscaped

uriReserved **::: one of**
; / ? : @ & = + $,

uriUnescaped **:::**
uriAlpha
DecimalDigit
uriMark

uriEscaped **:::**
% *HexDigit HexDigit*

uriAlpha **::: one of**
a b c d e f g h i j k l m n o p q r s t u v w x y z
A B C D E F G H I J K L M N O P Q R S T U V W X Y Z

© ISO/IEC 2002 – All rights reserved

Copyright International Organization for Standardization
Provided by IHS under license with ISO
No reproduction or networking permitted without license from IHS
Not for Resale

uriMark **::: one of**
- _ . ! ~ * ' ( )

When a character to be included in a URI is not listed above or is not intended to have the special meaning sometimes given to the reserved characters, that character must be encoded. The character is first transformed into a sequence of octets using the UTF-8 transformation, with surrogate pairs first transformed from their UCS-2 to UCS-4 encodings. (Note that for code points in the range [0,127] this results in a single octet with the same value.) The resulting sequence of octets is then transformed into a string with each octet represented by an escape sequence of the form "`%xx`".

The encoding and escaping process is described by the hidden function Encode taking two string arguments *string* and *unescapedSet*. This function is defined for expository purpose only.

1. Compute the number of characters in *string*.
2. Let *R* be the empty string.
3. Let *k* be 0.
4. If *k* equals Result(1), return *R*.
5. Let *C* be the character at position *k* within *string*.
6. If *C* is not in *unescapedSet*, go to step 9.
7. Let *S* be a string containing only the character *C*.
8. Go to step 24.
9. If the code point value of *C* is not less than 0xDC00 and not greater than 0xDFFF, throw a **URIError** exception.
10. If the code point value of *C* is less than 0xD800 or greater than 0xDBFF, let *V* be the code point value of *C* and go to step 16.
11. Increase *k* by 1.
12. If *k* equals Result(1), throw a **URIError** exception.
13. Get the code point value of the character at position *k* within *string*.
14. If Result(13) is less than 0xDC00 or greater than 0xDFFF, throw a **URIError** exception.
15. Let *V* be (((the code point value of *C*) – 0xD800) * 0x400 + (Result(13) – 0xDC00) + 0x10000).
16. Let *Octets* be the array of octets resulting by applying the UTF-8 transformation to *V*, and let *L* be the array size.
17. Let *j* be 0.
18. Get the value at position *j* within *Octets*.
19. Let *S* be a string containing three characters "`%XY`" where XY are two uppercase hexadecimal digits encoding the value of Result(18).
20. Let *R* be a new string value computed by concatenating the previous value of *R* and *S*.
21. Increase *j* by 1.
22. If *j* is equal to *L*, go to step 25.
23. Go to step 18.
24. Let *R* be a new string value computed by concatenating the previous value of *R* and *S*.
25. Increase *k* by 1.
26. Go to step 4.

The unescaping and decoding process is described by the hidden function Decode taking two string arguments *string* and *reservedSet*. This function is defined for expository purpose only.

1. Compute the number of characters in *string*.
2. Let *R* be the empty string.
3. Let *k* be 0.
4. If *k* equals Result(1), return *R*.
5. Let *C* be the character at position *k* within *string*.
6. If *C* is not '%', go to step 40.
7. Let *start* be *k*.
8. If *k* + 2 is greater than or equal to Result(1), throw a **URIError** exception.
9. If the characters at position (*k*+1) and (*k* + 2) within *string* do not represent hexadecimal digits, throw a **URIError** exception.
10. Let *B* be the 8-bit value represented by the two hexadecimal digits at position (*k* + 1) and (*k* + 2).
11. Increment *k* by 2.
12. If the most significant bit in *B* is 0, let *C* be the character with code point value *B* and go to step 37.
13. Let *n* be the smallest non-negative number such that (*B* << *n*) & 0x80 is equal to 0.

© ISO/IEC 2002 – All rights reserved
Copyright International Organization for Standardization
Provided by IHS under license with ISO
No reproduction or networking permitted without license from IHS
Not for Resale

14. If *n* equals 1 or *n* is greater than 4, throw a **URIError** exception.
15. Let *Octets* be an array of 8-bit integers of size *n*.
16. Put *B* into *Octets* at position 0.
17. If *k* + (3 * (*n* – 1)) is greater than or equal to Result(1), throw a **URIError** exception.
18. Let *j* be 1.
19. If *j* equals *n*, go to step 29.
20. Increment *k* by 1.
21. If the character at position *k* is not '%', throw a **URIError** exception.
22. If the characters at position (*k* +1) and (*k* + 2) within *string* do not represent hexadecimal digits, throw a **URIError** exception.
23. Let *B* be the 8-bit value represented by the two hexadecimal digits at position (*k* + 1) and (*k* + 2).
24. If the two most significant bits in *B* are not 10, throw a **URIError** exception.
25. Increment *k* by 2.
26. Put *B* into *Octets* at position *j*.
27. Increment *j* by 1.
28. Go to step 19.
29. Let *V* be the value obtained by applying the UTF-8 transformation to *Octets*, that is, from an array of octets into a 32-bit value.
30. If *V* is less than 0x10000, go to step 36.
31. If *V* is greater than 0x10FFFF, throw a **URIError** exception.
32. Let *L* be (((*V* – 0x10000) & 0x3FF) + 0xDC00).
33. Let *H* be ((((*V* – 0x10000) >> 10) & 0x3FF) + 0xD800).
34. Let *S* be the string containing the two characters with code point values *H* and *L*.
35. Go to step 41.
36. Let *C* be the character with code point value *V*.
37. If *C* is not in *reservedSet*, go to step 40.
38. Let *S* be the substring of *string* from position *start* to position *k* included.
39. Go to step 41.
40. Let *S* be the string containing only the character *C*.
41. Let *R* be a new string value computed by concatenating the previous value of *R* and *S*.
42. Increase *k* by 1.
43. Go to step 4.

NOTE The syntax of Uniform Resource Identifiers is given in RFC2396.

NOTE A formal description and implementation of UTF-8 is given in the Unicode Standard, Version 2.0, Appendix A.

In UTF-8, characters are encoded using sequences of 1 to 6 octets. The only octet of a "sequence" of one has the higher-order bit set to 0, the remaining 7 bits being used to encode the character value. In a sequence of n octets, n>1, the initial octet has the n higher-order bits set to 1, followed by a bit set to 0. The remaining bits of that octet contain bits from the value of the character to be encoded. The following octets all have the higher-order bit set to 1 and the following bit set to 0, leaving 6 bits in each to contain bits from the character to be encoded. The possible UTF-8 encodings of ECMAScript characters are:

Code Point Value	*Representation*	*1st Octet*	*2nd Octet*	*3rd Octet*	*4th Octet*
0x0000 – 0x007F	**00000000 0***zzzzzzz*	**0***zzzzzzz*			
0x0080 – 0x07FF	**00000***yyy yyzzzzzz*	**110***yyyyy*	**10***zzzzzz*		
0x0800 – 0xD7FF	*xxxxyyyy yyzzzzzz*	**1110***xxxx*	**10***yyyyyy*	**10***zzzzzz*	
0xD800 – 0xDBFF *followed by* **0xDC00 – 0xDFFF**	**110110***vv vvwwwwxx* *followed by* **110111***yy yyzzzzzz*	**11110***uuu*	**10***uuwwww*	**10***xxyyyy*	**10***zzzzzz*
0xD800 – 0xDBFF *not followed by* **0xDC00 – 0xDFFF**	*causes* URIError				
0xDC00 – 0xDFFF	*causes* URIError				
0xE000 – 0xFFFF	*xxxxyyyy yyzzzzzz*	**1110***xxxx*	**10***yyyyyy*	**10***zzzzzz*	

Where

uuuuu = *vvvv* + 1

to account for the addition of 0x10000 as in *section 3.7, Surrogates* of the Unicode Standard version 2.0.

--`,,```,,,,````-`-`,,`,,`,`,,`---

© ISO/IEC 2002 – All rights reserved

Copyright International Organization for Standardization
Provided by IHS under license with ISO
No reproduction or networking permitted without license from IHS
Not for Resale

The range of code point values 0xD800-0xDFFF is used to encode surrogate pairs; the above transformation combines a UCS-2 surrogate pair into a UCS-4 representation and encodes the resulting 21-bit value in UTF-8. Decoding reconstructs the surrogate pair.

15.1.3.1 decodeURI (encodedURI)

The **`decodeURI`** function computes a new version of a URI in which each escape sequence and UTF-8 encoding of the sort that might be introduced by the **`encodeURI`** function is replaced with the character that it represents. Escape sequences that could not have been introduced by **`encodeURI`** are not replaced.

When the **`decodeURI`** function is called with one argument *encodedURI*, the following steps are taken:

1. Call ToString(*encodedURI*).
2. Let *reservedURISet* be a string containing one instance of each character valid in *uriReserved* plus "#".
3. Call Decode(Result(1), *reservedURISet*)
4. Return Result(3).

NOTE The character "#" is not decoded from escape sequences even though it is not a reserved URI character.

15.1.3.2 decodeURIComponent (encodedURIComponent)

The **`decodeURIComponent`** function computes a new version of a URI in which each escape sequence and UTF-8 encoding of the sort that might be introduced by the **`encodeURIComponent`** function is replaced with the character that it represents.

When the **`decodeURIComponent`** function is called with one argument *encodedURIComponent*, the following steps are taken:

1. Call ToString(*encodedURIComponent*).
2. Let *reservedURIComponentSet* be the empty string.
3. Call Decode(Result(1), *reservedURIComponentSet*)
4. Return Result(3).

15.1.3.3 encodeURI (uri)

The **`encodeURI`** function computes a new version of a URI in which each instance of certain characters is replaced by one, two or three escape sequences representing the UTF-8 encoding of the character.

When the **`encodeURI`** function is called with one argument *uri*, the following steps are taken:

1. Call ToString(*uri*).
2. Let *unescapedURISet* be a string containing one instance of each character valid in *uriReserved* and *uriUnescaped* plus "#".
3. Call Encode(Result(1), *unescapedURISet*)
4. Return Result(3).

NOTE The character "#" is not encoded to an escape sequence even though it is not a reserved or unescaped URI character.

15.1.3.4 encodeURIComponent (uriComponent)

The **`encodeURIComponent`** function computes a new version of a URI in which each instance of certain characters is replaced by one, two or three escape sequences representing the UTF-8 encoding of the character.

When the **`encodeURIComponent`** function is called with one argument *uriComponent*, the following steps are taken:

1. Call ToString(*uriComponent*).
2. Let *unescapedURIComponentSet* be a string containing one instance of each character valid in *uriUnescaped*.
3. Call Encode(Result(1), *unescapedURIComponentSet*)
4. Return Result(3).

--`,,```,,,,````-`-`,,`,,`,`,,`---
© ISO/IEC 2002 – All rights reserved
Copyright International Organization for Standardization
Provided by IHS under license with ISO
No reproduction or networking permitted without license from IHS
Not for Resale

15.1.4 Constructor Properties of the Global Object

15.1.4.1 Object (. . .)

See sections 15.2.1 and 15.2.2.

15.1.4.2 Function (. . .)

See sections 15.3.1 and 15.3.2.

15.1.4.3 Array (. . .)

See sections 15.4.1 and 15.4.2.

15.1.4.4 String (. . .)

See sections 15.5.1 and 15.5.2.

15.1.4.5 Boolean (. . .)

See sections 15.6.1 and 15.6.2.

15.1.4.6 Number (. . .)

See sections 15.7.1 and 15.7.2.

15.1.4.7 Date (. . .)

See section 15.9.2.

15.1.4.8 RegExp (. . .)

See sections 15.10.3 and 15.10.4.

15.1.4.9 Error (. . .)

See sections 15.11.1 and 15.11.2.

15.1.4.10 EvalError (. . .)

See section 15.11.6.1.

15.1.4.11 RangeError (. . .)

See section 15.11.6.2.

15.1.4.12 ReferenceError (. . .)

See section 15.11.6.3.

15.1.4.13 SyntaxError (. . .)

See section 15.11.6.4.

15.1.4.14 TypeError (. . .)

See section 15.11.6.5.

15.1.4.15 URIError (. . .)

See section 15.11.6.6.

© ISO/IEC 2002 – All rights reserved

Copyright International Organization for Standardization
Provided by IHS under license with ISO
No reproduction or networking permitted without license from IHS
Not for Resale

15.1.5 Other Properties of the Global Object

15.1.5.1 Math

See section 15.8.

15.2 Object Objects

15.2.1 The Object Constructor Called as a Function

When **`Object`** is called as a function rather than as a constructor, it performs a type conversion.

15.2.1.1 Object ([value])

When the **`Object`** function is called with no arguments or with one argument *value*, the following steps are taken:

1. If *value* is **null**, **undefined** or not supplied, create and return a new Object object exactly if the object constructor had been called with the same arguments (section 15.2.2.1).
2. Return ToObject(*value*).

15.2.2 The Object Constructor

When **`Object`** is called as part of a **`new`** expression, it is a constructor that may create an object.

15.2.2.1 new Object ([value])

When the **`Object`** constructor is called with no arguments or with one argument *value*, the following steps are taken:

1. If *value* is not supplied, go to step 8.
2. If the type of *value* is not Object, go to step 5.
3. If the *value* is a native ECMAScript object, do not create a new object but simply return *value*.
4. If the *value* is a host object, then actions are taken and a result is returned in an implementation-dependent manner that may depend on the host object.
5. If the type of *value* is String, return ToObject(*value*).
6. If the type of *value* is Boolean, return ToObject(*value*).
7. If the type of *value* is Number, return ToObject(*value*).
8. (The argument *value* was not supplied or its type was Null or Undefined.)
   Create a new native ECMAScript object.
   The [[Prototype]] property of the newly constructed object is set to the Object prototype object.
   The [[Class]] property of the newly constructed object is set to **`"Object"`**.
   The newly constructed object has no [[Value]] property.
   Return the newly created native object.

15.2.3 Properties of the Object Constructor

The value of the internal [[Prototype]] property of the Object constructor is the Function prototype object.

Besides the internal properties and the **`length`** property (whose value is **1**), the Object constructor has the following properties:

15.2.3.1 Object.prototype

The initial value of **`Object.prototype`** is the Object prototype object (section 15.2.4).

This property has the attributes { DontEnum, DontDelete, ReadOnly }.

Copyright International Organization for Standardization
Provided by IHS under license with ISO
No reproduction or networking permitted without license from IHS
© ISO/IEC 2002 – All rights reserved
Not for Resale

15.2.4 Properties of the Object Prototype Object

The value of the internal [[Prototype]] property of the Object prototype object is **null** and the value of the internal [[Class]] property is **"Object"**.

15.2.4.1 Object.prototype.constructor

The initial value of **Object.prototype.constructor** is the built-in **Object** constructor.

15.2.4.2 Object.prototype.toString ( )

When the **toString** method is called, the following steps are taken:

1. Get the [[Class]] property of this object.
2. Compute a string value by concatenating the three strings **"[object "**, Result(1), and **"]"**.
3. Return Result(2).

15.2.4.3 Object.prototype.toLocaleString ( )

This function looks up the **toString** property of the this object, and returns the result of calling it. This is not necessarily the original implementation described in Section 15.2.4.2.

NOTE This function is provided to give all Objects a generic **toLocaleString** interface, even though not all may use it. Currently, **Array**, **Number**, and **Date** provide their own locale-sensitive **toLocaleString** methods.

NOTE The first parameter to this function is likely to be used in a future version of this standard; it is recommended that implementations do not use this parameter position for anything else.

15.2.4.4 Object.prototype.valueOf ( )

The **valueOf** method returns its **this** value. If the object is the result of calling the Object constructor with a host object (section 15.2.2.1), it is implementation-defined whether **valueOf** returns its **this** value or another value such as the host object originally passed to the constructor.

15.2.4.5 Object.prototype.hasOwnProperty (V)

When the **hasOwnProperty** method is called with argument *V*, the following steps are taken:

1. Let *O* be this object.
2. Call ToString(*V*).
3. If *O* doesn't have a property with the name given by Result(2), return **false**.
4. Return **true**.

NOTE Unlike [[HasProperty]] (section 8.6.2.4), this method does not consider objects in the prototype chain.

15.2.4.6 Object.prototype.isPrototypeOf (V)

When the **isPrototypeOf** method is called with argument *V*, the following steps are taken:

1. Let *O* be this object.
2. If *V* is not an object, return **false**.
3. Let *V* be the value of the [[Prototype]] property of *V*.
4. if *V* is **null**, return **false**
5. If *O* and *V* refer to the same object or if they refer to objects joined to each other (section 13.1.2), return **true**.
6. Go to step 3.

© ISO/IEC 2002 – All rights reserved

Copyright International Organization for Standardization
Provided by IHS under license with ISO
No reproduction or networking permitted without license from IHS
Not for Resale

15.2.4.7 Object.prototype.propertyIsEnumerable (V)

When the **`propertyIsEnumerable`** method is called with argument *V*, the following steps are taken:

1. Let *O* be this object.
2. Call ToString(*V*).
3. If *O* doesn't have a property with the name given by Result(2), return **false**.
4. If the property has the DontEnum attribute, return **false**.
5. Return **true**.

NOTE This method does not consider objects in the prototype chain.

15.2.5 Properties of Object Instances

Object instances have no special properties beyond those inherited from the Object prototype object.

15.3 Function Objects

15.3.1 The Function Constructor Called as a Function

When **`Function`** is called as a function rather than as a constructor, it creates and initialises a new Function object. Thus the function call **`Function(`**…**`)`** is equivalent to the object creation expression **`new Function(`**…**`)`** with the same arguments.

15.3.1.1 Function (p1, p2, … , pn, body)

When the **`Function`** function is called with some arguments *p1*, *p2*, … , *pn*, *body* (where *n* might be 0, that is, there are no "*p*" arguments, and where *body* might also not be provided), the following steps are taken:

1. Create and return a new Function object as if the function constructor had been called with the same arguments (section 15.3.2.1).

15.3.2 The Function Constructor

When **`Function`** is called as part of a **`new`** expression, it is a constructor: it initialises the newly created object.

15.3.2.1 new Function (p1, p2, … , pn, body)

The last argument specifies the body (executable code) of a function; any preceding arguments specify formal parameters.

When the **`Function`** constructor is called with some arguments *p1*, *p2*, … , *pn*, *body* (where *n* might be 0, that is, there are no "*p*" arguments, and where *body* might also not be provided), the following steps are taken:

1. Let *P* be the empty string.
2. If no arguments were given, let *body* be the empty string and go to step 13.
3. If one argument was given, let *body* be that argument and go to step 13.
4. Let Result(4) be the first argument.
5. Let *P* be ToString(Result(4)).
6. Let *k* be 2.
7. If *k* equals the number of arguments, let *body* be the kth argument and go to step 13.
8. Let Result(8) be the kth argument.
9. Call ToString(Result(8)).
10. Let *P* be the result of concatenating the previous value of *P*, the string **`","`** (a comma), and Result(9).
11. Increase *k* by 1.
12. Go to step 7.
13. Call ToString(*body*).
14. If *P* is not parsable as a $FormalParameterList_{opt}$ then throw a **SyntaxError** exception.
15. If *body* is not parsable as *FunctionBody* then throw a **SyntaxError** exception.

--`,,```,,,,````-`-,,`,,`,`,,`---
© ISO/IEC 2002 – All rights reserved
Copyright International Organization for Standardization
Provided by IHS under license with ISO
No reproduction or networking permitted without license from IHS
Not for Resale

16. Create a new Function object as specified in section 13.2 with parameters specified by parsing *P* as a *FormalParameterList*$_{opt}$ and body specified by parsing *body* as a *FunctionBody*. Pass in a scope chain consisting of the global object as the *Scope* parameter.
17. Return Result(16).

A **`prototype`** property is automatically created for every function, to provide for the possibility that the function will be used as a constructor.

NOTE It is permissible but not necessary to have one argument for each formal parameter to be specified. For example, all three of the following expressions produce the same result:

```
new Function("a", "b", "c", "return a+b+c")

new Function("a, b, c", "return a+b+c")

new Function("a,b", "c", "return a+b+c")
```

15.3.3 Properties of the Function Constructor

The value of the internal [[Prototype]] property of the Function constructor is the Function prototype object (section 15.3.4).

Besides the internal properties and the **`length`** property (whose value is **1**), the Function constructor has the following properties:

15.3.3.1 Function.prototype

The initial value of **`Function.prototype`** is the Function prototype object (section 15.3.4).

This property has the attributes { DontEnum, DontDelete, ReadOnly }.

15.3.4 Properties of the Function Prototype Object

The Function prototype object is itself a Function object (its [[Class]] is **`"Function"`**) that, when invoked, accepts any arguments and returns **undefined**.

The value of the internal [[Prototype]] property of the Function prototype object is the Object prototype object (section 15.3.2.1).

It is a function with an “empty body”; if it is invoked, it merely returns **undefined**.

The Function prototype object does not have a **`valueOf`** property of its own; however, it inherits the **`valueOf`** property from the Object prototype Object.

15.3.4.1 Function.prototype.constructor

The initial value of **`Function.prototype.constructor`** is the built-in **`Function`** constructor.

15.3.4.2 Function.prototype.toString ( )

An implementation-dependent representation of the function is returned. This representation has the syntax of a *FunctionDeclaration*. Note in particular that the use and placement of white space, line terminators, and semicolons within the representation string is implementation-dependent.

The **`toString`** function is not generic; it throws a **TypeError** exception if its **this** value is not a Function object. Therefore, it cannot be transferred to other kinds of objects for use as a method.

15.3.4.3 Function.prototype.apply (thisArg, argArray)

The **`apply`** method takes two arguments, *thisArg* and *argArray*, and performs a function call using the [[Call]] property of the object. If the object does not have a [[Call]] property, a **TypeError** exception is thrown.

© ISO/IEC 2002 – All rights reserved

Copyright International Organization for Standardization
Provided by IHS under license with ISO
No reproduction or networking permitted without license from IHS
Not for Resale

If *thisArg* is **null** or **undefined**, the called function is passed the global object as the **this** value. Otherwise, the called function is passed ToObject(*thisArg*) as the **this** value.

If *argArray* is **null** or **undefined**, the called function is passed no arguments. Otherwise, if *argArray* is neither an array nor an arguments object (see section 10.1.8), a **TypeError** exception is thrown. If *argArray* is either an array or an arguments object, the function is passed the (ToUint32(*argArray*.length)) arguments *argArray*[0], *argArray*[1], …, *argArray*[ToUint32(*argArray*.length)–1].

The **`length`** property of the **`apply`** method is **2**.

15.3.4.4 Function.prototype.call (thisArg [, arg1 [, arg2, …]])

The **`call`** method takes one or more arguments, *thisArg* and (optionally) *arg1*, *arg2* etc, and performs a function call using the [[Call]] property of the object. If the object does not have a [[Call]] property, a **TypeError** exception is thrown. The called function is passed *arg1*, *arg2*, etc. as the arguments.

If *thisArg* is **null** or **undefined**, the called function is passed the global object as the **this** value. Otherwise, the called function is passed ToObject(*thisArg*) as the **this** value.

The **`length`** property of the **`call`** method is **1**.

15.3.5 Properties of Function Instances

In addition to the required internal properties, every function instance has a [[Call]] property, a [[Construct]] property and a [[Scope]] property (see sections 8.6.2 and 13.2). The value of the [[Class]] property is **"Function"**.

15.3.5.1 length

The value of the **`length`** property is usually an integer that indicates the “typical” number of arguments expected by the function. However, the language permits the function to be invoked with some other number of arguments. The behaviour of a function when invoked on a number of arguments other than the number specified by its **`length`** property depends on the function. This property has the attributes { DontDelete, ReadOnly, DontEnum }.

15.3.5.2 prototype

The value of the **`prototype`** property is used to initialise the internal [[Prototype]] property of a newly created object before the Function object is invoked as a constructor for that newly created object. This property has the attribute { DontDelete }.

15.3.5.3 [[HasInstance]] (V)

Assume *F* is a Function object.

When the [[HasInstance]] method of *F* is called with value *V*, the following steps are taken:

1. If *V* is not an object, return **false**.
2. Call the [[Get]] method of *F* with property name **`"prototype"`**.
3. Let *O* be Result(2).
4. If *O* is not an object, throw a **TypeError** exception.
5. Let *V* be the value of the [[Prototype]] property of *V*.
6. If *V* is **`null`**, return **false**.
7. If *O* and *V* refer to the same object or if they refer to objects joined to each other (section 13.1.2), return **true**.
8. Go to step 5.

15.4 Array Objects

Array objects give special treatment to a certain class of property names. A property name *P* (in the form of a string value) is an *array index* if and only if ToString(ToUint32(*P*)) is equal to *P* and ToUint32(*P*) is not equal to $2^{32}-1$. Every Array object has a **`length`** property whose value is always a nonnegative integer less than 2^{32}. The value of

--`,,```,,,,````-`-`,,`,,`,`,,`---
© ISO/IEC 2002 – All rights reserved
Copyright International Organization for Standardization
Provided by IHS under license with ISO
No reproduction or networking permitted without license from IHS
Not for Resale

the **length** property is numerically greater than the name of every property whose name is an array index; whenever a property of an Array object is created or changed, other properties are adjusted as necessary to maintain this invariant. Specifically, whenever a property is added whose name is an array index, the **length** property is changed, if necessary, to be one more than the numeric value of that array index; and whenever the **length** property is changed, every property whose name is an array index whose value is not smaller than the new length is automatically deleted. This constraint applies only to properties of the Array object itself and is unaffected by **length** or array index properties that may be inherited from its prototype.

15.4.1 The Array Constructor Called as a Function

When **Array** is called as a function rather than as a constructor, it creates and initialises a new Array object. Thus the function call **Array(…)** is equivalent to the object creation expression **new Array(…)** with the same arguments.

15.4.1.1 Array ([item1 [, item2 [, …]]])

When the **Array** function is called the following steps are taken:

1. Create and return a new Array object exactly as if the array constructor had been called with the same arguments (section 15.4.2).

15.4.2 The Array Constructor

When **Array** is called as part of a **new** expression, it is a constructor: it initialises the newly created object.

15.4.2.1 new Array ([item0 [, item1 [, …]]])

This description applies if and only if the Array constructor is given no arguments or at least two arguments.

The [[Prototype]] property of the newly constructed object is set to the original Array prototype object, the one that is the initial value of **Array.prototype** (section 15.4.3.1).

The [[Class]] property of the newly constructed object is set to **"Array"**.

The **length** property of the newly constructed object is set to the number of arguments.

The **0** property of the newly constructed object is set to *item0* (if supplied); the **1** property of the newly constructed object is set to *item1* (if supplied); and, in general, for as many arguments as there are, the *k* property of the newly constructed object is set to argument *k*, where the first argument is considered to be argument number **0**.

15.4.2.2 new Array (len)

The [[Prototype]] property of the newly constructed object is set to the original Array prototype object, the one that is the initial value of **Array.prototype** (section 15.4.3.1). The [[Class]] property of the newly constructed object is set to **"Array"**.

If the argument *len* is a Number and ToUint32(*len*) is equal to *len*, then the **length** property of the newly constructed object is set to ToUint32(*len*). If the argument *len* is a Number and ToUint32(*len*) is not equal to *len*, a **RangeError** exception is thrown.

If the argument *len* is not a Number, then the **length** property of the newly constructed object is set to **1** and the **0** property of the newly constructed object is set to *len*.

15.4.3 Properties of the Array Constructor

The value of the internal [[Prototype]] property of the Array constructor is the Function prototype object (section 15.3.4).

Besides the internal properties and the **length** property (whose value is **1**), the Array constructor has the following properties:

--`,,```,,,,````-`-`,,`,,`,`,,`---

© ISO/IEC 2002 – All rights reserved

Copyright International Organization for Standardization
Provided by IHS under license with ISO
No reproduction or networking permitted without license from IHS
Not for Resale

15.4.3.1 Array.prototype

The initial value of **`Array.prototype`** is the Array prototype object (section 15.4.4).

This property has the attributes { DontEnum, DontDelete, ReadOnly }.

15.4.4 Properties of the Array Prototype Object

The value of the internal [[Prototype]] property of the Array prototype object is the Object prototype object (section 15.2.3.1).

The Array prototype object is itself an array; its [[Class]] is **`"Array"`**, and it has a **`length`** property (whose initial value is **+0**) and the special internal [[Put]] method described in section 15.4.5.1.

In following descriptions of functions that are properties of the Array prototype object, the phrase “this object” refers to the object that is the **this** value for the invocation of the function. It is permitted for the **this** to be an object for which the value of the internal [[Class]] property is not **`"Array"`**.

NOTE The Array prototype object does not have a **`valueOf`** property of its own; however, it inherits the **`valueOf`** property from the Object prototype Object.

15.4.4.1 Array.prototype.constructor

The initial value of **`Array.prototype.constructor`** is the built-in **`Array`** constructor.

15.4.4.2 Array.prototype.toString ( )

The result of calling this function is the same as if the built-in **`join`** method were invoked for this object with no argument.

The **`toString`** function is not generic; it throws a **TypeError** exception if its **this** value is not an Array object. Therefore, it cannot be transferred to other kinds of objects for use as a method.

15.4.4.3 Array.prototype.toLocaleString ( )

The elements of the array are converted to strings using their **`toLocaleString`** methods, and these strings are then concatenated, separated by occurrences of a separator string that has been derived in an implementation-defined locale-specific way. The result of calling this function is intended to be analogous to the result of **`toString`**, except that the result of this function is intended to be locale-specific.

The result is calculated as follows:

1. Call the [[Get]] method of this object with argument **`"length"`**.
2. Call ToUint32(Result(1)).
3. Let *separator* be the list-separator string appropriate for the host environment’s current locale (this is derived in an implementation-defined way).
4. Call ToString(*separator*).
5. If Result(2) is zero, return the empty string.
6. Call the [[Get]] method of this object with argument **`"0"`**.
7. If Result(6) is **undefined** or **null**, use the empty string; otherwise, call ToObject(Result(6)).toLocaleString().
8. Let *R* be Result(7).
9. Let *k* be **`1`**.
10. If *k* equals Result(2), return *R*.
11. Let *S* be a string value produced by concatenating *R* and Result(4).
12. Call the [[Get]] method of this object with argument ToString(*k*).
13. If Result(12) is **undefined** or **null**, use the empty string; otherwise, call ToObject(Result(12)).toLocaleString().
14. Let *R* be a string value produced by concatenating *S* and Result(13).
15. Increase *k* by 1.
16. Go to step 10.

--`,,```,,,,````-`-,,`,,`,`,,`---
© ISO/IEC 2002 – All rights reserved
Copyright International Organization for Standardization
Provided by IHS under license with ISO
No reproduction or networking permitted without license from IHS
Not for Resale

The **toLocaleString** function is not generic; it throws a **TypeError** exception if its **this** value is not an Array object. Therefore, it cannot be transferred to other kinds of objects for use as a method.

NOTE The first parameter to this function is likely to be used in a future version of this standard; it is recommended that implementations do not use this parameter position for anything else.

15.4.4.4 Array.prototype.concat ([item1 [, item2 [, …]]])

When the **concat** method is called with zero or more arguments *item1*, *item2*, etc., it returns an array containing the array elements of the object followed by the array elements of each argument in order.

The following steps are taken:

1. Let *A* be a new array created as if by the expression **new Array()**.
2. Let *n* be 0.
3. Let *E* be this object.
4. If *E* is not an Array object, go to step 16.
5. Let *k* be 0.
6. Call the [[Get]] method of *E* with argument **"length"**.
7. If *k* equals Result(6) go to step 19.
8. Call ToString(*k*).
9. If *E* has a property named by Result(8), go to step 10, but if *E* has no property named by Result(8), go to step 13.
10. Call ToString(n).
11. Call the [[Get]] method of *E* with argument Result(8).
12. Call the [[Put]] method of *A* with arguments Result(10) and Result(11).
13. Increase *n* by 1.
14. Increase *k* by 1.
15. Go to step 7.
16. Call ToString(*n*).
17. Call the [[Put]] method of *A* with arguments Result(16) and *E*.
18. Increase *n* by 1.
19. Get the next argument in the argument list; if there are no more arguments, go to step 22.
20. Let *E* be Result(19).
21. Go to step 4.
22. Call the [[Put]] method of *A* with arguments **"length"** and *n*.
23. Return *A*.

The **length** property of the **concat** method is **1**.

NOTE The **concat** function is intentionally generic; it does not require that its **this** value be an Array object. Therefore it can be transferred to other kinds of objects for use as a method. Whether the **concat** function can be applied successfully to a host object is implementation-dependent.

15.4.4.5 Array.prototype.join (separator)

The elements of the array are converted to strings, and these strings are then concatenated, separated by occurrences of the *separator*. If no separator is provided, a single comma is used as the separator.

The **join** method takes one argument, *separator*, and performs the following steps:

1. Call the [[Get]] method of this object with argument **"length"**.
2. Call ToUint32(Result(1)).
3. If *separator* is **undefined**, let *separator* be the single-character string **","**.
4. Call ToString(*separator*).
5. If Result(2) is zero, return the empty string.
6. Call the [[Get]] method of this object with argument **"0"**.
7. If Result(6) is **undefined** or **null**, use the empty string; otherwise, call ToString(Result(6)).
8. Let *R* be Result(7).
9. Let *k* be **1**.

© ISO/IEC 2002 – All rights reserved

Copyright International Organization for Standardization
Provided by IHS under license with ISO
No reproduction or networking permitted without license from IHS
Not for Resale

10. If *k* equals Result(2), return *R*.
11. Let *S* be a string value produced by concatenating *R* and Result(4).
12. Call the [[Get]] method of this object with argument ToString(*k*).
13. If Result(12) is **undefined** or **null**, use the empty string; otherwise, call ToString(Result(12)).
14. Let *R* be a string value produced by concatenating *S* and Result(13).
15. Increase *k* by 1.
16. Go to step 10.

The **`length`** property of the **`join`** method is **1**.

NOTE The **`join`** function is intentionally generic; it does not require that its **this** value be an Array object. Therefore, it can be transferred to other kinds of objects for use as a method. Whether the **`join`** function can be applied successfully to a host object is implementation-dependent.

15.4.4.6 Array.prototype.pop ( )

The last element of the array is removed from the array and returned.

1. Call the [[Get]] method of this object with argument **`"length"`**.
2. Call ToUint32(Result(1)).
3. If Result(2) is not zero, go to step 6.
4. Call the [[Put]] method of this object with arguments **`"length"`** and Result(2).
5. Return **undefined**.
6. Call ToString(Result(2)–1).
7. Call the [[Get]] method of this object with argument Result(6).
8. Call the [[Delete]] method of this object with argument Result(6).
9. Call the [[Put]] method of this object with arguments **`"length"`** and (Result(2)–1).
10. Return Result(7).

NOTE The **`pop`** function is intentionally generic; it does not require that its **this** value be an Array object. Therefore it can be transferred to other kinds of objects for use as a method. Whether the **`pop`** function can be applied successfully to a host object is implementation-dependent.

15.4.4.7 Array.prototype.push ([item1 [, item2 [, …]]])

The arguments are appended to the end of the array, in the order in which they appear. The new length of the array is returned as the result of the call.

When the **`push`** method is called with zero or more arguments *item1, item2*, etc., the following steps are taken:

1. Call the [[Get]] method of this object with argument **`"length"`**.
2. Let *n* be the result of calling ToUint32(Result(1)).
3. Get the next argument in the argument list; if there are no more arguments, go to step 7.
4. Call the [[Put]] method of this object with arguments ToString(*n*) and Result(3).
5. Increase *n* by 1.
6. Go to step 3.
7. Call the [[Put]] method of this object with arguments **`"length"`** and *n*.
8. Return *n*.

The **`length`** property of the **`push`** method is **1**.

NOTE The **`push`** function is intentionally generic; it does not require that its **this** value be an Array object. Therefore it can be transferred to other kinds of objects for use as a method. Whether the **`push`** function can be applied successfully to a host object is implementation-dependent.

15.4.4.8 Array.prototype.reverse ( )

The elements of the array are rearranged so as to reverse their order. The object is returned as the result of the call.

--`,,```,,,,````-`-`,,`,,`,`,,`---
© ISO/IEC 2002 – All rights reserved
Copyright International Organization for Standardization
Provided by IHS under license with ISO
No reproduction or networking permitted without license from IHS
Not for Resale

1. Call the [[Get]] method of this object with argument **"length"**.
2. Call ToUint32(Result(1)).
3. Compute floor(Result(2)/2).
4. Let *k* be **0**.
5. If *k* equals Result(3), return this object.
6. Compute Result(2)–*k*–1.
7. Call ToString(*k*).
8. Call ToString(Result(6)).
9. Call the [[Get]] method of this object with argument Result(7).
10. Call the [[Get]] method of this object with argument Result(8).
11. If this object does not have a property named by Result(8), go to step 19.
12. If this object does not have a property named by Result(7), go to step 16.
13. Call the [[Put]] method of this object with arguments Result(7) and Result(10).
14. Call the [[Put]] method of this object with arguments Result(8) and Result(9).
15. Go to step 25.
16. Call the [[Put]] method of this object with arguments Result(7) and Result(10).
17. Call the [[Delete]] method on this object, providing Result(8) as the name of the property to delete.
18. Go to step 25.
19. If this object does not have a property named by Result(7), go to step 23.
20. Call the [[Delete]] method on this object, providing Result(7) as the name of the property to delete..
21. Call the [[Put]] method of this object with arguments Result(8) and Result(9).
22. Go to step 25.
23. Call the [[Delete]] method on this object, providing Result(7) as the name of the property to delete.
24. Call the [[Delete]] method on this object, providing Result(8) as the name of the property to delete.
25. Increase *k* by 1.
26. Go to step 5.

NOTE The **reverse** function is intentionally generic; it does not require that its **this** value be an Array object. Therefore, it can be transferred to other kinds of objects for use as a method. Whether the **reverse** function can be applied successfully to a host object is implementation-dependent.

15.4.4.9 Array.prototype.shift ( )

The first element of the array is removed from the array and returned.

1. Call the [[Get]] method of this object with argument **"length"**.
2. Call ToUint32(Result(1)).
3. If Result(2) is not zero, go to step 6.
4. Call the [[Put]] method of this object with arguments **"length"** and Result(2).
5. Return **undefined**.
6. Call the [[Get]] method of this object with argument **0**.
7. Let *k* be 1.
8. If *k* equals Result(2), go to step 18.
9. Call ToString(*k*).
10. Call ToString(*k*–1).
11. If this object has a property named by Result(9), go to step 12; but if this object has no property named by Result(9), then go to step 15.
12. Call the [[Get]] method of this object with argument Result(9).
13. Call the [[Put]] method of this object with arguments Result(10) and Result(12).
14. Go to step 16.
15. Call the [[Delete]] method of this object with argument Result(10).
16. Increase *k* by 1.
17. Go to step 8.
18. Call the [[Delete]] method of this object with argument ToString(Result(2)–1).
19. Call the [[Put]] method of this object with arguments **"length"** and (Result(2)–1).
20. Return Result(6).

NOTE The **shift** function is intentionally generic; it does not require that its **this** value be an Array object. Therefore it can be transferred to other kinds of objects for use as a method. Whether the **shift** function can be applied successfully to a host object is implementation-dependent.

--`,,```,,,,````-`-`,,`,,`,`,,`---

© ISO/IEC 2002 – All rights reserved

Copyright International Organization for Standardization
Provided by IHS under license with ISO
No reproduction or networking permitted without license from IHS
Not for Resale

15.4.4.10 Array.prototype.slice (start, end)

The **slice** method takes two arguments, *start* and *end*, and returns an array containing the elements of the array from element *start* up to, but not including, element *end* (or through the end of the array if *end* is **undefined**). If *start* is negative, it is treated as (*length*+*start*) where *length* is the length of the array. If *end* is negative, it is treated as (*length*+*end*) where *length* is the length of the array. The following steps are taken:

1. Let *A* be a new array created as if by the expression **new Array()**.
2. Call the [[Get]] method of this object with argument **"length"**.
3. Call ToUint32(Result(2)).
4. Call ToInteger(*start*).
5. If Result(4) is negative, use max((Result(3)+Result(4)),0); else use min(Result(4),Result(3)).
6. Let *k* be Result(5).
7. If *end* is **undefined**, use Result(3); else use ToInteger(*end*).
8. If Result(7) is negative, use max((Result(3)+Result(7)),0); else use min(Result(7),Result(3)).
9. Let *n* be 0.
10. If *k* is greater than or equal to Result(8), go to step 19.
11. Call ToString(*k*).
12. If this object has a property named by Result(11), go to step 13; but if this object has no property named by Result(11), then go to step 16.
13. Call ToString(*n*).
14. Call the [[Get]] method of this object with argument Result(11).
15. Call the [[Put]] method of *A* with arguments Result(13) and Result(14).
16. Increase *k* by 1.
17. Increase *n* by 1.
18. Go to step 10.
19. Call the [[Put]] method of *A* with arguments **"length"** and *n*.
20. Return *A*.

The **length** property of the **slice** method is **2**.

NOTE The **slice** function is intentionally generic; it does not require that its **this** value be an Array object. Therefore it can be transferred to other kinds of objects for use as a method. Whether the **slice** function can be applied successfully to a host object is implementation-dependent.

15.4.4.11 Array.prototype.sort (comparefn)

The elements of this array are sorted. The sort is not necessarily stable (that is, elements that compare equal do not necessarily remain in their original order). If *comparefn* is not **undefined**, it should be a function that accepts two arguments *x* and *y* and returns a negative value if $x < y$, zero if $x = y$, or a positive value if $x > y$.

If *comparefn* is not **undefined** and is not a consistent comparison function for the elements of this array (see below), the behaviour of **sort** is implementation-defined. Let *len* be ToUint32(**this.length**). If there exist integers *i* and *j* and an object *P* such that all of the conditions below are satisfied then the behaviour of **sort** is implementation-defined:

- $0 \leq i < len$
- $0 \leq j < len$
- **this** does not have a property with name ToString(*i*)
- *P* is obtained by following one or more [[Prototype]] properties starting at **this**
- *P* has a property with name ToString(*j*)

Otherwise the following steps are taken.

1. Call the [[Get]] method of this object with argument **"length"**.
2. Call ToUint32(Result(1)).
3. Perform an implementation-dependent sequence of calls to the [[Get]] , [[Put]], and [[Delete]] methods of this object and to SortCompare (described below), where the first argument for each call to [[Get]], [[Put]], or

© ISO/IEC 2002 – All rights reserved
Copyright International Organization for Standardization
Provided by IHS under license with ISO
No reproduction or networking permitted without license from IHS
Not for Resale

[[Delete]] is a nonnegative integer less than Result(2) and where the arguments for calls to SortCompare are results of previous calls to the [[Get]] method.

4. Return this object.

The returned object must have the following two properties.

- There must be some mathematical permutation π of the nonnegative integers less than Result(2), such that for every nonnegative integer *j* less than Result(2), if property **old[***j***]** existed, then **new[**π(*j*)**]** is exactly the same value as **old[***j***]**, but if property **old[***j***]** did not exist, then **new[**π(*j*)**]** does not exist.
- Then for all nonnegative integers *j* and *k*, each less than Result(2), if SortCompare(*j*,*k*) < 0 (see SortCompare below), then $\pi(j) < \pi(k)$.

Here the notation **old[***j***]** is used to refer to the hypothetical result of calling the [[Get]] method of this object with argument *j* before this function is executed, and the notation **new[***j***]** to refer to the hypothetical result of calling the [[Get]] method of this object with argument *j* after this function has been executed.

A function *comparefn* is a consistent comparison function for a set of values *S* if all of the requirements below are met for all values *a*, *b*, and *c* (possibly the same value) in the set *S*: The notation $a <_{CF} b$ means *comparefn*(*a*,*b*) < 0; $a =_{CF} b$ means *comparefn*(*a*,*b*) = 0 (of either sign); and $a >_{CF} b$ means *comparefn*(*a*,*b*) > 0.

- Calling *comparefn*(*a*,*b*) always returns the same value *v* when given a specific pair of values *a* and *b* as its two arguments. Furthermore, *v* has type Number, and *v* is not NaN. Note that this implies that exactly one of $a <_{CF} b$, $a =_{CF} b$, and $a >_{CF} b$ will be true for a given pair of *a* and *b*.
- $a =_{CF} a$ (reflexivity)
- If $a =_{CF} b$, then $b =_{CF} a$ (symmetry)
- If $a =_{CF} b$ and $b =_{CF} c$, then $a =_{CF} c$ (transitivity of $=_{CF}$)
- If $a <_{CF} b$ and $b <_{CF} c$, then $a <_{CF} c$ (transitivity of $<_{CF}$)
- If $a >_{CF} b$ and $b >_{CF} c$, then $a >_{CF} c$ (transitivity of $>_{CF}$)

NOTE The above conditions are necessary and sufficient to ensure that *comparefn* divides the set *S* into equivalence classes and that these equivalence classes are totally ordered.

When the SortCompare operator is called with two arguments *j* and *k*, the following steps are taken:

1. Call ToString(*j*).
2. Call ToString(*k*).
3. If this object does not have a property named by Result(1), and this object does not have a property named by Result(2), return **+0**.
4. If this object does not have a property named by Result(1), return 1.
5. If this object does not have a property named by Result(2), return –1.
6. Call the [[Get]] method of this object with argument Result(1).
7. Call the [[Get]] method of this object with argument Result(2).
8. Let *x* be Result(6).
9. Let *y* be Result(7).
10. If *x* and *y* are both **undefined**, return **+0**.
11. If *x* is **undefined**, return 1.
12. If *y* is **undefined**, return –1.
13. If the argument *comparefn* is **undefined**, go to step 16.
14. Call *comparefn* with arguments *x* and *y*.
15. Return Result(14).
16. Call ToString(*x*).
17. Call ToString(*y*).
18. If Result(16) < Result(17), return –1.
19. If Result(16) > Result(17), return 1.
20. Return **+0**.

© ISO/IEC 2002 – All rights reserved
Copyright International Organization for Standardization
Provided by IHS under license with ISO
No reproduction or networking permitted without license from IHS
Not for Resale

NOTE Because non-existent property values always compare greater than **undefined** property values, and **undefined** always compares greater than any other value, undefined property values always sort to the end of the result, followed by non-existent property values.

NOTE The **sort** function is intentionally generic; it does not require that its **this** value be an Array object. Therefore, it can be transferred to other kinds of objects for use as a method. Whether the **sort** function can be applied successfully to a host object is implementation-dependent.

15.4.4.12 Array.prototype.splice (start, deleteCount [, item1 [, item2 [, …]]])

When the **splice** method is called with two or more arguments *start*, *deleteCount* and (optionally) *item1*, *item2*, etc., the *deleteCount* elements of the array starting at array index *start* are replaced by the arguments *item1*, *item2*, etc. The following steps are taken:

1. Let *A* be a new array created as if by the expression **new Array()**.
2. Call the [[Get]] method of this object with argument **"length"**.
3. Call ToUint32(Result(2)).
4. Call ToInteger(*start*).
5. If Result(4) is negative, use max((Result(3)+Result(4)),0); else use min(Result(4),Result(3)).
6. Compute min(max(ToInteger(*deleteCount*),0),Result(3)–Result(5)).
7. Let *k* be 0.
8. If *k* equals Result(6), go to step 16.
9. Call ToString(Result(5)+*k*).
10. If this object has a property named by Result(9), go to step 11; but if this object has no property named by Result(9), then go to step 14.
11. Call ToString(*k*).
12. Call the [[Get]] method of this object with argument Result(9).
13. Call the [[Put]] method of *A* with arguments Result(11) and Result(12).
14. Increment *k* by 1.
15. Go to step 8.
16. Call the [[Put]] method of *A* with arguments **"length"** and Result(6).
17. Compute the number of additional arguments *item1*, *item2*, etc.
18. If Result(17) is equal to Result(6), go to step 48.
19. If Result(17) is greater than Result(6), go to step 37.
20. Let *k* be Result(5).
21. If *k* is equal to (Result(3)–Result(6)), go to step 31.
22. Call ToString(*k*+Result(6)).
23. Call ToString(*k*+Result(17)).
24. If this object has a property named by Result(22), go to step 25; but if this object has no property named by Result(22), then go to step 28.
25. Call the [[Get]] method of this object with argument Result(22).
26. Call the [[Put]] method of this object with arguments Result(23) and Result(25).
27. Go to step 29.
28. Call the [[Delete]] method of this object with argument Result(23).
29. Increase *k* by 1.
30. Go to step 21.
31. Let *k* be Result(3).
32. If *k* is equal to (Result(3)–Result(6)+Result(17)), go to step 48.
33. Call ToString(*k*–1).
34. Call the [[Delete]] method of this object with argument Result(33).
35. Decrease *k* by 1.
36. Go to step 32.
37. Let *k* be (Result(3)–Result(6)).
38. If *k* is equal to Result(5), go to step 48.
39. Call ToString(*k*+Result(6)–1).
40. Call ToString(*k*+Result(17)–1)
41. If this object has a property named by Result(39), go to step 42; but if this object has no property named by Result(39), then go to step 45.
42. Call the [[Get]] method of this object with argument Result(39).
43. Call the [[Put]] method of this object with arguments Result(40) and Result(42).

© ISO/IEC 2002 – All rights reserved
Copyright International Organization for Standardization
Provided by IHS under license with ISO
No reproduction or networking permitted without license from IHS
Not for Resale

44. Go to step 46.
45. Call the [[Delete]] method of this object with argument Result(40).
46. Decrease *k* by 1.
47. Go to step 38.
48. Let *k* be Result(5).
49. Get the next argument in the part of the argument list that starts with *item1*; if there are no more arguments, go to step 53.
50. Call the [[Put]] method of this object with arguments ToString(*k*) and Result(49).
51. Increase *k* by 1.
52. Go to step 49.
53. Call the [[Put]] method of this object with arguments **"length"** and (Result(3)–Result(6)+Result(17)).
54. Return *A*.

The **length** property of the **splice** method is **2**.

NOTE The **splice** function is intentionally generic; it does not require that its **this** value be an Array object. Therefore it can be transferred to other kinds of objects for use as a method. Whether the **splice** function can be applied successfully to a host object is implementation-dependent.

15.4.4.13 Array.prototype.unshift ([item1 [, item2 [, …]]])

The arguments are prepended to the start of the array, such that their order within the array is the same as the order in which they appear in the argument list.

When the **unshift** method is called with zero or more arguments *item1, item2*, etc., the following steps are taken:

1. Call the [[Get]] method of this object with argument **"length"**.
2. Call ToUint32(Result(1)).
3. Compute the number of arguments.
4. Let *k* be Result(2).
5. If *k* is zero, go to step 15.
6. Call ToString(*k*–1).
7. Call ToString(*k*+Result(3)–1).
8. If this object has a property named by Result(6), go to step 9; but if this object has no property named by Result(6), then go to step 12.
9. Call the [[Get]] method of this object with argument Result(6).
10. Call the [[Put]] method of this object with arguments Result(7) and Result(9).
11. Go to step 13.
12. Call the [[Delete]] method of this object with argument Result(7).
13. Decrease *k* by 1.
14. Go to step 5.
15. Let *k* be 0.
16. Get the next argument in the part of the argument list that starts with *item1*; if there are no more arguments, go to step 21.
17. Call ToString(*k*).
18. Call the [[Put]] method of this object with arguments Result(17) and Result(16).
19. Increase *k* by 1.
20. Go to step 16.
21. Call the [[Put]] method of this object with arguments **"length"** and (Result(2)+Result(3)).
22. Return (Result(2)+Result(3)).

The **length** property of the **unshift** method is **1**.

NOTE The **unshift** function is intentionally generic; it does not require that its **this** value be an Array object. Therefore it can be transferred to other kinds of objects for use as a method. Whether the **unshift** function can be applied successfully to a host object is implementation-dependent.

15.4.5 Properties of Array Instances

Array instances inherit properties from the Array prototype object and also have the following properties.

© ISO/IEC 2002 – All rights reserved

Copyright International Organization for Standardization
Provided by IHS under license with ISO
No reproduction or networking permitted without license from IHS
Not for Resale

15.4.5.1 [[Put]] (P, V)

Array objects use a variation of the [[Put]] method used for other native ECMAScript objects (section 8.6.2.2).

Assume *A* is an Array object and *P* is a string.

When the [[Put]] method of *A* is called with property *P* and value *V*, the following steps are taken:

1. Call the [[CanPut]] method of *A* with name P.
2. If Result(1) is **false**, return.
3. If *A* doesn't have a property with name *P*, go to step 7.
4. If P is **`"length"`**, go to step 12.
5. Set the value of property *P* of *A* to *V*.
6. Go to step 8.
7. Create a property with name *P*, set its value to *V* and give it empty attributes.
8. If *P* is not an array index, return.
9. If ToUint32(*P*) is less than the value of the **`length`** property of *A*, then return.
10. Change (or set) the value of the **`length`** property of *A* to ToUint32(*P*)+1.
11. Return.
12. Compute ToUint32(*V*).
13. If Result(12) is not equal to ToNumber(*V*), throw a **RangeError** exception.
14. For every integer *k* that is less than the value of the **`length`** property of *A* but not less than Result(12), if *A* itself has a property (not an inherited property) named ToString(*k*), then delete that property.
15. Set the value of property *P* of *A* to Result(12).
16. Return.

15.4.5.2 length

The **`length`** property of this Array object is always numerically greater than the name of every property whose name is an array index.

The **`length`** property has the attributes { DontEnum, DontDelete }.

15.5 String Objects

15.5.1 The String Constructor Called as a Function

When **`String`** is called as a function rather than as a constructor, it performs a type conversion.

15.5.1.1 String ([value])

Returns a string value (not a String object) computed by ToString(*value*). If *value* is not supplied, the empty string `""` is returned.

15.5.2 The String Constructor

When **`String`** is called as part of a **`new`** expression, it is a constructor: it initialises the newly created object.

15.5.2.1 new String ([value])

The [[Prototype]] property of the newly constructed object is set to the original String prototype object, the one that is the initial value of **`String.prototype`** (section 15.5.3.1).

The [[Class]] property of the newly constructed object is set to **`"String"`**.

The [[Value]] property of the newly constructed object is set to ToString(*value*), or to the empty string if *value* is not supplied.

© ISO/IEC 2002 – All rights reserved
Copyright International Organization for Standardization
Provided by IHS under license with ISO
No reproduction or networking permitted without license from IHS
Not for Resale

15.5.3 Properties of the String Constructor

The value of the internal [[Prototype]] property of the String constructor is the Function prototype object (section 15.3.4).

Besides the internal properties and the **`length`** property (whose value is **1**), the String constructor has the following properties:

15.5.3.1 String.prototype

The initial value of **`String.prototype`** is the String prototype object (section 15.5.4).

This property has the attributes { DontEnum, DontDelete, ReadOnly }.

15.5.3.2 String.fromCharCode ([char0 [, char1 [, ...]]])

Returns a string value containing as many characters as the number of arguments. Each argument specifies one character of the resulting string, with the first argument specifying the first character, and so on, from left to right. An argument is converted to a character by applying the operation ToUint16 (section 9.7) and regarding the resulting 16-bit integer as the code point value of a character. If no arguments are supplied, the result is the empty string.

The **`length`** property of the **`fromCharCode`** function is **1**.

15.5.4 Properties of the String Prototype Object

The String prototype object is itself a String object (its [[Class]] is **`"String"`**) whose value is an empty string.

The value of the internal [[Prototype]] property of the String prototype object is the Object prototype object (section 15.2.3.1).

15.5.4.1 String.prototype.constructor

The initial value of **`String.prototype.constructor`** is the built-in **`String`** constructor.

15.5.4.2 String.prototype.toString ( )

Returns this string value. (Note that, for a String object, the **`toString`** method happens to return the same thing as the **`valueOf`** method.)

The **`toString`** function is not generic; it throws a **TypeError** exception if its **this** value is not a String object. Therefore, it cannot be transferred to other kinds of objects for use as a method.

15.5.4.3 String.prototype.valueOf ( )

Returns this string value.

The **`valueOf`** function is not generic; it throws a **TypeError** exception if its **this** value is not a String object. Therefore, it cannot be transferred to other kinds of objects for use as a method.

15.5.4.4 String.prototype.charAt (pos)

Returns a string containing the character at position *pos* in the string resulting from converting this object to a string. If there is no character at that position, the result is the empty string. The result is a string value, not a String object.

If *pos* is a value of Number type that is an integer, then the result of **`x.charAt(`***pos***`)`** is equal to the result of **`x.substring(`***pos***`, `***pos***`+1)`**.

© ISO/IEC 2002 – All rights reserved

Copyright International Organization for Standardization
Provided by IHS under license with ISO
No reproduction or networking permitted without license from IHS
Not for Resale

When the **charAt** method is called with one argument *pos*, the following steps are taken:

1. Call ToString, giving it the **this** value as its argument.
2. Call ToInteger(*pos*).
3. Compute the number of characters in Result(1).
4. If Result(2) is less than 0 or is not less than Result(3), return the empty string.
5. Return a string of length 1, containing one character from Result(1), namely the character at position Result(2), where the first (leftmost) character in Result(1) is considered to be at position 0, the next one at position 1, and so on.

NOTE The **charAt** function is intentionally generic; it does not require that its **this** value be a String object. Therefore, it can be transferred to other kinds of objects for use as a method.

15.5.4.5 String.prototype.charCodeAt (pos)

Returns a number (a nonnegative integer less than 2^{16}) representing the code point value of the character at position *pos* in the string resulting from converting this object to a string. If there is no character at that position, the result is **NaN**.

When the **charCodeAt** method is called with one argument *pos*, the following steps are taken:

1. Call ToString, giving it the **this** value as its argument.
2. Call ToInteger(*pos*).
3. Compute the number of characters in Result(1).
4. If Result(2) is less than 0 or is not less than Result(3), return **NaN**.
5. Return a value of Number type, whose value is the code point value of the character at position Result(2) in the string Result(1), where the first (leftmost) character in Result(1) is considered to be at position 0, the next one at position 1, and so on.

NOTE The **charCodeAt** function is intentionally generic; it does not require that its **this** value be a String object. Therefore it can be transferred to other kinds of objects for use as a method.

15.5.4.6 String.prototype.concat ([string1 [, string2 [, …]]])

When the **concat** method is called with zero or more arguments *string1*, *string2*, etc., it returns a string consisting of the characters of this object (converted to a string) followed by the characters of each of *string1*, *string2*, etc. (where each argument is converted to a string). The result is a string value, not a String object. The following steps are taken:

1. Call ToString, giving it the **this** value as its argument.
2. Let *R* be Result(1).
3. Get the next argument in the argument list; if there are no more arguments, go to step 7.
4. Call ToString(Result(3)).
5. Let *R* be the string value consisting of the characters in the previous value of *R* followed by the characters Result(4).
6. Go to step 3.
7. Return *R*.

The **length** property of the **concat** method is **1**.

NOTE The **concat** function is intentionally generic; it does not require that its **this** value be a String object. Therefore it can be transferred to other kinds of objects for use as a method.

15.5.4.7 String.prototype.indexOf (searchString, position)

If *searchString* appears as a substring of the result of converting this object to a string, at one or more positions that are greater than or equal to *position*, then the index of the smallest such position is returned; otherwise, **-1** is returned. If *position* is **undefined**, 0 is assumed, so as to search all of the string.

--`,,```,,,,````-`-`,,`,,`,`,,`---

© ISO/IEC 2002 – All rights reserved
Copyright International Organization for Standardization
Provided by IHS under license with ISO
No reproduction or networking permitted without license from IHS
Not for Resale

The **indexOf** method takes two arguments, *searchString* and *position*, and performs the following steps:

1. Call ToString, giving it the **this** value as its argument.
2. Call ToString(*searchString*).
3. Call ToInteger(*position*). (If *position* is **undefined**, this step produces the value **0**).
4. Compute the number of characters in Result(1).
5. Compute min(max(Result(3), 0), Result(4)).
6. Compute the number of characters in the string that is Result(2).
7. Compute the smallest possible integer *k* not smaller than Result(5) such that *k*+Result(6) is not greater than Result(4), and for all nonnegative integers *j* less than Result(6), the character at position *k*+*j* of Result(1) is the same as the character at position *j* of Result(2); but if there is no such integer *k*, then compute the value **-1**.
8. Return Result(7).

The **length** property of the **indexOf** method is **1**.

NOTE The **indexOf** function is intentionally generic; it does not require that its **this** value be a String object. Therefore, it can be transferred to other kinds of objects for use as a method.

15.5.4.8 String.prototype.lastIndexOf (searchString, position)

If *searchString* appears as a substring of the result of converting this object to a string at one or more positions that are smaller than or equal to *position*, then the index of the greatest such position is returned; otherwise, **-1** is returned. If *position* is **undefined**, the length of the string value is assumed, so as to search all of the string.

The **lastIndexOf** method takes two arguments, *searchString* and *position*, and performs the following steps:

1. Call ToString, giving it the **this** value as its argument.
2. Call ToString(*searchString*).
3. Call ToNumber(*position*). (If *position* is **undefined**, this step produces the value **NaN**).
4. If Result(3) is **NaN**, use **+∞**; otherwise, call ToInteger(Result(3)).
5. Compute the number of characters in Result(1).
6. Compute min(max(Result(4), 0), Result(5)).
7. Compute the number of characters in the string that is Result(2).
8. Compute the largest possible nonnegative integer *k* not larger than Result(6) such that *k*+Result(7) is not greater than Result(5), and for all nonnegative integers *j* less than Result(7), the character at position *k*+*j* of Result(1) is the same as the character at position *j* of Result(2); but if there is no such integer *k*, then compute the value **-1**.
9. Return Result(8).

The **length** property of the **lastIndexOf** method is **1**.

NOTE The **lastIndexOf** function is intentionally generic; it does not require that its **this** value be a String object. Therefore, it can be transferred to other kinds of objects for use as a method.

15.5.4.9 String.prototype.localeCompare (that)

When the **localeCompare** method is called with one argument *that*, it returns a number other than **NaN** that represents the result of a locale-sensitive string comparison of this object (converted to a string) with *that* (converted to a string). The two strings are compared in an implementation-defined fashion. The result is intended to order strings in the sort order specified by the system default locale, and will be negative, zero, or positive, depending on whether **this** comes before *that* in the sort order, the strings are equal, or **this** comes after *that* in the sort order, respectively.

The **localeCompare** method, if considered as a function of two arguments **this** and *that*, is a consistent comparison function (as defined in section 15.4.4.11) on the set of all strings. Furthermore, **localeCompare** returns **0** or **-0** when comparing two strings that are considered canonically equivalent by the Unicode standard.

© ISO/IEC 2002 – All rights reserved

Copyright International Organization for Standardization
Provided by IHS under license with ISO
No reproduction or networking permitted without license from IHS
Not for Resale

The actual return values are left implementation-defined to permit implementers to encode additional information in the result value, but the function is required to define a total ordering on all strings and to return **0** when comparing two strings that are considered canonically equivalent by the Unicode standard.

NOTE The **localeCompare** method itself is not directly suitable as an argument to **Array.prototype.sort** because the latter requires a function of two arguments.

NOTE This function is intended to rely on whatever language-sensitive comparison functionality is available to the ECMAScript environment from the host environment, and to compare according to the rules of the host environment's current locale. It is strongly recommended that this function treat strings that are canonically equivalent according to the Unicode standard as identical (in other words, compare the strings as if they had both been converted to Normalised Form C or D first). It is also recommended that this function not honour Unicode compatibility equivalences or decompositions.

If no language-sensitive comparison at all is available from the host environment, this function may perform a bitwise comparison.

NOTE The **localeCompare** function is intentionally generic; it does not require that its **this** value be a String object. Therefore, it can be transferred to other kinds of objects for use as a method.

NOTE The second parameter to this function is likely to be used in a future version of this standard; it is recommended that implementations do not use this parameter position for anything else.

15.5.4.10 String.prototype.match (regexp)

If *regexp* is not an object whose [[Class]] property is **"RegExp"**, it is replaced with the result of the expression **new RegExp(***regexp***)**. Let *string* denote the result of converting the **this** value to a string. Then do one of the following:

- If *regexp*.**global** is **false**: Return the result obtained by invoking **RegExp.prototype.exec** (see section 15.10.6.2) on *regexp* with *string* as parameter.
- If *regexp*.**global** is **true**: Set the *regexp*.**lastIndex** property to 0 and invoke **RegExp.prototype.exec** repeatedly until there is no match. If there is a match with an empty string (in other words, if the value of *regexp*.**lastIndex** is left unchanged), increment *regexp*.**lastIndex** by 1. Let *n* be the number of matches. If *n* = 0, then the value returned is **null**; otherwise, the value returned is an array with the **length** property set to *n* and properties 0 through *n*–1 corresponding to the first elements of the results of all matching invocations of **RegExp.prototype.exec**.

NOTE The **match** function is intentionally generic; it does not require that its **this** value be a String object. Therefore, it can be transferred to other kinds of objects for use as a method.

15.5.4.11 String.prototype.replace (searchValue, replaceValue)

Let *string* denote the result of converting the **this** value to a string.

If *searchValue* is a regular expression (an object whose [[Class]] property is **"RegExp"**), do the following: If *searchValue*.global is **false**, then search *string* for the first match of the regular expression *searchValue*. If *searchValue*.global is **true**, then search *string* for all matches of the regular expression *searchValue*. Do the search in the same manner as in **String.prototype.match**, including the update of *searchValue*.**lastIndex**. Let *m* be the number of left capturing parentheses in *searchValue* (*NCapturingParens* as specified in section 15.10.2.1).

If *searchValue* is not a regular expression, let *searchString* be ToString(*searchValue*) and search *string* for the first occurrence of *searchString*. Let *m* be 0.

If *replaceValue* is a function, then for each matched substring, call the function with the following *m* + 3 arguments. Argument 1 is the substring that matched. If *searchValue* is a regular expression, the next *m* arguments are all of the captures in the MatchResult (see section 15.10.2.1). Argument *m* + 2 is the offset within *string* where the match occurred, and argument *m* + 3 is *string*. The result is a string value derived from the original input by replacing each matched substring with the corresponding return value of the function call, converted to a string if need be.

Otherwise, let *newstring* denote the result of converting *replaceValue* to a string. The result is a string value derived from the original input string by replacing each matched substring with a string derived from *newstring* by replacing characters in *newstring* by replacement text as specified in the following table. These **$** replacements are done left-

© ISO/IEC 2002 – All rights reserved
Copyright International Organization for Standardization
Provided by IHS under license with ISO
No reproduction or networking permitted without license from IHS
Not for Resale

to-right, and, once such a replacement is performed, the new replacement text is not subject to further replacements. For example, **`"$1,$2".replace(/(\$(\d))/g, "$$1-$1$2")`** returns **`"$1-$11,$1-$22"`**. A **`$`** in *newstring* that does not match any of the forms below is left as is.

Characters	*Replacement text*
`$$`	**`$`**
`$&`	The matched substring.
`$``	The portion of *string* that precedes the matched substring.
`$'`	The portion of *string* that follows the matched substring.
`$`*n*	The *n*th capture, where *n* is a single digit 1-9 and **`$`***n* is not followed by a decimal digit. If *n*≤*m* and the *n*th capture is **undefined**, use the empty string instead. If *n*>*m*, the result is implementation-defined.
`$`*nn*	The *nn*th capture, where *nn* is a two-digit decimal number 01-99. If *nn*≤*m* and the *nn*th capture is **undefined**, use the empty string instead. If *nn*>*m*, the result is implementation-defined.

NOTE The **`replace`** function is intentionally generic; it does not require that its **this** value be a String object. Therefore, it can be transferred to other kinds of objects for use as a method.

15.5.4.12 String.prototype.search (regexp)

If *regexp* is not an object whose [[Class]] property is **`"RegExp"`**, it is replaced with the result of the expression **`new RegExp(`***regexp***`)`**. Let *string* denote the result of converting the **this** value to a string.

The value *string* is searched from its beginning for an occurrence of the regular expression pattern *regexp*. The result is a number indicating the offset within the string where the pattern matched, or –1 if there was no match.

NOTE This method ignores the **`lastIndex`** and **`global`** properties of *regexp*. The **`lastIndex`** property of *regexp* is left unchanged.

NOTE The **`search`** function is intentionally generic; it does not require that its **this** value be a String object. Therefore, it can be transferred to other kinds of objects for use as a method.

15.5.4.13 String.prototype.slice (start, end)

The **`slice`** method takes two arguments, *start* and *end*, and returns a substring of the result of converting this object to a string, starting from character position *start* and running to, but not including, character position *end* (or through the end of the string if *end* is **undefined**). If *start* is negative, it is treated as (*sourceLength*+*start*) where *sourceLength* is the length of the string. If *end* is negative, it is treated as (*sourceLength*+*end*) where *sourceLength* is the length of the string. The result is a string value, not a String object. The following steps are taken:

1. Call ToString, giving it the **this** value as its argument.
2. Compute the number of characters in Result(1).
3. Call ToInteger(*start*).
4. If *end* is **undefined**, use Result(2); else use ToInteger(*end*).
5. If Result(3) is negative, use max(Result(2)+Result(3),0); else use min(Result(3),Result(2)).
6. If Result(4) is negative, use max(Result(2)+Result(4),0); else use min(Result(4),Result(2)).
7. Compute max(Result(6)–Result(5),0).
8. Return a string containing Result(7) consecutive characters from Result(1) beginning with the character at position Result(5).

The **`length`** property of the **`slice`** method is **2**.

NOTE The **`slice`** function is intentionally generic; it does not require that its **this** value be a String object. Therefore it can be transferred to other kinds of objects for use as a method.

--`,,```,,,,````-`-`,,`,,`,`,,`---

© ISO/IEC 2002 – All rights reserved

Copyright International Organization for Standardization
Provided by IHS under license with ISO
No reproduction or networking permitted without license from IHS
Not for Resale

15.5.4.14 String.prototype.split (separator, limit)

Returns an Array object into which substrings of the result of converting this object to a string have been stored. The substrings are determined by searching from left to right for occurrences of *separator*; these occurrences are not part of any substring in the returned array, but serve to divide up the string value. The value of *separator* may be a string of any length or it may be a RegExp object (i.e., an object whose [[Class]] property is **`"RegExp"`**; see section 15.10).

The value of *separator* may be an empty string, an empty regular expression, or a regular expression that can match an empty string. In this case, *separator* does not match the empty substring at the beginning or end of the input string, nor does it match the empty substring at the end of the previous separator match. (For example, if *separator* is the empty string, the string is split up into individual characters; the length of the result array equals the length of the string, and each substring contains one character.) If *separator* is a regular expression, only the first match at a given position of the **this** string is considered, even if backtracking could yield a non-empty-substring match at that position. (For example, **`"ab".split(/a*?/)`** evaluates to the array **`["a","b"]`**, while **`"ab".split(/a*/)`** evaluates to the array **`["","b"]`**.)

If the **this** object is (or converts to) the empty string, the result depends on whether *separator* can match the empty string. If it can, the result array contains no elements. Otherwise, the result array contains one element, which is the empty string.

If *separator* is a regular expression that contains capturing parentheses, then each time *separator* is matched the results (including any **undefined** results) of the capturing parentheses are spliced into the output array. (For example, **`"A<B>bold</B>and<CODE>coded</CODE>".split(/<(\/)?([^<>]+)>/)`** evaluates to the array **`["A", undefined, "B", "bold", "/", "B", "and", undefined, "CODE", "coded", "/", "CODE", ""]`**.)

If *separator* is **undefined**, then the result array contains just one string, which is the **this** value (converted to a string). If *limit* is not **undefined**, then the output array is truncated so that it contains no more than *limit* elements.

When the **`split`** method is called, the following steps are taken:

1. Let *S* = ToString(**`this`**).
2. Let *A* be a new array created as if by the expression **`new Array()`**.
3. If *limit* is **undefined**, let *lim* = 2^{32}–1; else let *lim* = ToUint32(*limit*).
4. Let *s* be the number of characters in *S*.
5. Let *p* = 0.
6. If *separator* is a RegExp object (its [[Class]] is **`"RegExp"`**), let *R* = *separator*; otherwise let *R* = ToString(*separator*).
7. If *lim* = 0, return *A*.
8. If *separator* is **undefined**, go to step 33.
9. If *s* = 0, go to step 31.
10. Let *q* = *p*.
11. If *q* = *s*, go to step 28.
12. Call *SplitMatch*(*R*, *S*, *q*) and let *z* be its MatchResult result.
13. If *z* is **failure**, go to step 26.
14. *z* must be a State. Let *e* be *z*'s *endIndex* and let *cap* be *z*'s *captures* array.
15. If *e* = *p*, go to step 26.
16. Let *T* be a string value equal to the substring of *S* consisting of the characters at positions *p* (inclusive) through *q* (exclusive).
17. Call the [[Put]] method of A with arguments A.length and T.
18. If A.length = lim, return A.
19. Let p = e.
20. Let *i* = 0.
21. If *i* is equal to the number of elements in *cap*, go to step 10.
22. Let *i* = *i*+1.
23. Call the [[Put]] method of *A* with arguments *A*`.length` and *cap*[*i*].
24. If *A*`.length` = *lim*, return *A*.
25. Go to step 21.

© ISO/IEC 2002 – All rights reserved
Copyright International Organization for Standardization
Provided by IHS under license with ISO
No reproduction or networking permitted without license from IHS
Not for Resale

26. Let *q* = *q*+1.
27. Go to step 11.
28. Let *T* be a string value equal to the substring of *S* consisting of the characters at positions *p* (inclusive) through *s* (exclusive).
29. Call the [[Put]] method of *A* with arguments *A*`.length` and *T*.
30. Return *A*.
31. Call *SplitMatch*(*R*, *S*, 0) and let *z* be its MatchResult result.
32. If *z* is not **failure**, return *A*.
33. Call the [[Put]] method of *A* with arguments `"0"` and *S*.
34. Return *A*.

The internal helper function *SplitMatch* takes three parameters, a string *S*, an integer *q*, and a string or RegExp *R*, and performs the following in order to return a MatchResult (see section 15.10.2.1):

1. If *R* is a RegExp object (its [[Class]] is `"RegExp"`), go to step 8.
2. *R* must be a string. Let *r* be the number of characters in *R*.
3. Let *s* be the number of characters in *S*.
4. If *q*+*r* > *s* then return the MatchResult **failure**.
5. If there exists an integer *i* between 0 (inclusive) and *r* (exclusive) such that the character at position *q*+*i* of *S* is different from the character at position *i* of *R*, then return **failure**.
6. Let *cap* be an empty array of captures (see section 15.10.2.1).
7. Return the State (*q*+*r*, *cap*). (see section 15.10.2.1)
8. Call the [[Match]] method of *R* giving it the arguments *S* and *q*, and return the MatchResult result.

The `length` property of the `split` method is **2**.

NOTE The `split` function is intentionally generic; it does not require that its **this** value be a String object. Therefore, it can be transferred to other kinds of objects for use as a method.

NOTE The `split` method ignores the value of *separator*`.global` for separators that are RegExp objects.

15.5.4.15 String.prototype.substring (start, end)

The **substring** method takes two arguments, *start* and *end*, and returns a substring of the result of converting this object to a string, starting from character position *start* and running to, but not including, character position *end* of the string (or through the end of the string is *end* is **undefined**). The result is a string value, not a String object.

If either argument is **NaN** or negative, it is replaced with zero; if either argument is larger than the length of the string, it is replaced with the length of the string.

If *start* is larger than *end*, they are swapped.

The following steps are taken:

1. Call ToString, giving it the **this** value as its argument.
2. Compute the number of characters in Result(1).
3. Call ToInteger(*start*).
4. If *end* is **undefined**, use Result(2); else use ToInteger(*end*).
5. Compute min(max(Result(3), 0), Result(2)).
6. Compute min(max(Result(4), 0), Result(2)).
7. Compute min(Result(5), Result(6)).
8. Compute max(Result(5), Result(6)).
9. Return a string whose length is the difference between Result(8) and Result(7), containing characters from Result(1), namely the characters with indices Result(7) through Result(8)−1, in ascending order.

The `length` property of the `substring` method is **2**.

NOTE The `substring` function is intentionally generic; it does not require that its **this** value be a String object. Therefore, it can be transferred to other kinds of objects for use as a method.

© ISO/IEC 2002 – All rights reserved
Copyright International Organization for Standardization
Provided by IHS under license with ISO
No reproduction or networking permitted without license from IHS
Not for Resale

15.5.4.16 String.prototype.toLowerCase ( )

If this object is not already a string, it is converted to a string. The characters in that string are converted one by one to lower case. The result is a string value, not a String object.

The characters are converted one by one. The result of each conversion is the original character, unless that character has a Unicode lowercase equivalent, in which case the lowercase equivalent is used instead.

NOTE The result should be derived according to the case mappings in the Unicode character database (this explicitly includes not only the UnicodeData.txt file, but also the SpecialCasings.txt file that accompanies it in Unicode 2.1.8 and later).

NOTE The **`toLowerCase`** function is intentionally generic; it does not require that its **this** value be a String object. Therefore, it can be transferred to other kinds of objects for use as a method.

15.5.4.17 String.prototype.toLocaleLowerCase ( )

This function works exactly the same as **`toLowerCase`** except that its result is intended to yield the correct result for the host environment's current locale, rather than a locale-independent result. There will only be a difference in the few cases (such as Turkish) where the rules for that language conflict with the regular Unicode case mappings.

NOTE The **`toLocaleLowerCase`** function is intentionally generic; it does not require that its **this** value be a String object. Therefore, it can be transferred to other kinds of objects for use as a method.

NOTE The first parameter to this function is likely to be used in a future version of this standard; it is recommended that implementations do not use this parameter position for anything else.

15.5.4.18 String.prototype.toUpperCase ( )

This function behaves in exactly the same way as **`String.prototype.toLowerCase`**, except that characters are mapped to their *uppercase* equivalents as specified in the Unicode Character Database.

NOTE Because both **`toUpperCase`** and **`toLowerCase`** have context-sensitive behaviour, the functions are not symmetrical. In other words, **`s.toUpperCase().toLowerCase()`** is not necessarily equal to **`s.toLowerCase()`**.

NOTE The **`toUpperCase`** function is intentionally generic; it does not require that its **this** value be a String object. Therefore, it can be transferred to other kinds of objects for use as a method.

15.5.4.19 String.prototype.toLocaleUpperCase ( )

This function works exactly the same as **`toUpperCase`** except that its result is intended to yield the correct result for the host environment's current locale, rather than a locale-independent result. There will only be a difference in the few cases (such as Turkish) where the rules for that language conflict with the regular Unicode case mappings.

NOTE The **`toLocaleUpperCase`** function is intentionally generic; it does not require that its **this** value be a String object. Therefore, it can be transferred to other kinds of objects for use as a method.

NOTE The first parameter to this function is likely to be used in a future version of this standard; it is recommended that implementations do not use this parameter position for anything else.

15.5.5 Properties of String Instances

String instances inherit properties from the String prototype object and also have a [[Value]] property and a **`length`** property.

The [[Value]] property is the string value represented by this String object.

15.5.5.1 length

The number of characters in the String value represented by this String object.

Once a String object is created, this property is unchanging. It has the attributes { DontEnum, DontDelete, ReadOnly }.

© ISO/IEC 2002 – All rights reserved
Copyright International Organization for Standardization
Provided by IHS under license with ISO
No reproduction or networking permitted without license from IHS
Not for Resale

15.6 Boolean Objects

15.6.1 The Boolean Constructor Called as a Function

When **`Boolean`** is called as a function rather than as a constructor, it performs a type conversion.

15.6.1.1 Boolean (value)

Returns a boolean value (not a Boolean object) computed by ToBoolean(*value*).

15.6.2 The Boolean Constructor

When **`Boolean`** is called as part of a **`new`** expression it is a constructor: it initialises the newly created object.

15.6.2.1 new Boolean (value)

The [[Prototype]] property of the newly constructed object is set to the original Boolean prototype object, the one that is the initial value of **`Boolean.prototype`** (section 15.6.3.1).

The [[Class]] property of the newly constructed Boolean object is set to **`"Boolean"`**.

The [[Value]] property of the newly constructed Boolean object is set to ToBoolean(*value*).

15.6.3 Properties of the Boolean Constructor

The value of the internal [[Prototype]] property of the Boolean constructor is the Function prototype object (section 15.3.4).

Besides the internal properties and the **`length`** property (whose value is **1**), the Boolean constructor has the following property:

15.6.3.1 Boolean.prototype

The initial value of **`Boolean.prototype`** is the Boolean prototype object (section 15.6.4).

This property has the attributes { DontEnum, DontDelete, ReadOnly }.

15.6.4 Properties of the Boolean Prototype Object

The Boolean prototype object is itself a Boolean object (its [[Class]] is **`"Boolean"`**) whose value is **false**.

The value of the internal [[Prototype]] property of the Boolean prototype object is the Object prototype object (section 15.2.3.1).

In following descriptions of functions that are properties of the Boolean prototype object, the phrase “this Boolean object” refers to the object that is the **this** value for the invocation of the function; a **TypeError** exception is thrown if the **this** value is not an object for which the value of the internal [[Class]] property is **`"Boolean"`**. Also, the phrase “this boolean value” refers to the boolean value represented by this Boolean object, that is, the value of the internal [[Value]] property of this Boolean object.

15.6.4.1 Boolean.prototype.constructor

The initial value of **`Boolean.prototype.constructor`** is the built-in **`Boolean`** constructor.

15.6.4.2 Boolean.prototype.toString ( )

If this boolean value is **true**, then the string **`"true"`** is returned. Otherwise, this boolean value must be **false**, and the string **`"false"`** is returned.

--`,,```,,,,````-`-`,,`,,`,`,,`---

© ISO/IEC 2002 – All rights reserved

Copyright International Organization for Standardization
Provided by IHS under license with ISO
No reproduction or networking permitted without license from IHS
Not for Resale

The **`toString`** function is not generic; it throws a **TypeError** exception if its **this** value is not a Boolean object. Therefore, it cannot be transferred to other kinds of objects for use as a method.

15.6.4.3 Boolean.prototype.valueOf ( )

Returns this boolean value.

The **`valueOf`** function is not generic; it throws a **TypeError** exception if its **this** value is not a Boolean object. Therefore, it cannot be transferred to other kinds of objects for use as a method.

15.6.5 Properties of Boolean Instances

Boolean instances have no special properties beyond those inherited from the Boolean prototype object.

15.7 Number Objects

15.7.1 The Number Constructor Called as a Function

When **`Number`** is called as a function rather than as a constructor, it performs a type conversion.

15.7.1.1 Number ([value])

Returns a number value (not a Number object) computed by ToNumber(*value*) if *value* was supplied, else returns **+0**.

15.7.2 The Number Constructor

When **`Number`** is called as part of a **`new`** expression it is a constructor: it initialises the newly created object.

15.7.2.1 new Number ([value])

The [[Prototype]] property of the newly constructed object is set to the original Number prototype object, the one that is the initial value of **`Number.prototype`** (section 15.7.3.1).

The [[Class]] property of the newly constructed object is set to **`"Number"`**.

The [[Value]] property of the newly constructed object is set to ToNumber(*value*) if *value* was supplied, else to +0.

15.7.3 Properties of the Number Constructor

The value of the internal [[Prototype]] property of the Number constructor is the Function prototype object (section 15.3.4).

Besides the internal properties and the **`length`** property (whose value is **1**), the Number constructor has the following property:

15.7.3.1 Number.prototype

The initial value of **`Number.prototype`** is the Number prototype object (section 15.7.4).

This property has the attributes { DontEnum, DontDelete, ReadOnly }.

15.7.3.2 Number.MAX_VALUE

The value of **`Number.MAX_VALUE`** is the largest positive finite value of the number type, which is approximately $1.7976931348623157 \times 10^{\overline{308}}$.

This property has the attributes { DontEnum, DontDelete, ReadOnly }.

© ISO/IEC 2002 – All rights reserved
Copyright International Organization for Standardization
Provided by IHS under license with ISO
No reproduction or networking permitted without license from IHS
Not for Resale

15.7.3.3 Number.MIN_VALUE

The value of **`Number.MIN_VALUE`** is the smallest positive value of the number type, which is approximately 5×10^{-324}.

This property has the attributes { DontEnum, DontDelete, ReadOnly }.

15.7.3.4 Number.NaN

The value of **`Number.NaN`** is **NaN**.

This property has the attributes { DontEnum, DontDelete, ReadOnly }.

15.7.3.5 Number.NEGATIVE_INFINITY

The value of **`Number.NEGATIVE_INFINITY`** is $-\infty$.

This property has the attributes { DontEnum, DontDelete, ReadOnly }.

15.7.3.6 Number.POSITIVE_INFINITY

The value of **`Number.POSITIVE_INFINITY`** is $+\infty$.

This property has the attributes { DontEnum, DontDelete, ReadOnly }.

15.7.4 Properties of the Number Prototype Object

The Number prototype object is itself a Number object (its [[Class]] is **`"Number"`**) whose value is +0.

The value of the internal [[Prototype]] property of the Number prototype object is the Object prototype object (section 15.2.3.1).

In following descriptions of functions that are properties of the Number prototype object, the phrase “this Number object” refers to the object that is the **this** value for the invocation of the function; a **TypeError** exception is thrown if the **this** value is not an object for which the value of the internal [[Class]] property is **`"Number"`**. Also, the phrase “this number value” refers to the number value represented by this Number object, that is, the value of the internal [[Value]] property of this Number object.

15.7.4.1 Number.prototype.constructor

The initial value of **`Number.prototype.constructor`** is the built-in **`Number`** constructor.

15.7.4.2 Number.prototype.toString (radix)

If *radix* is the number 10 or **undefined**, then this number value is given as an argument to the ToString operator; the resulting string value is returned.

If *radix* is an integer from 2 to 36, but not 10, the result is a string, the choice of which is implementation-dependent.

The **`toString`** function is not generic; it throws a **TypeError** exception if its **this** value is not a Number object. Therefore, it cannot be transferred to other kinds of objects for use as a method.

15.7.4.3 Number.prototype.toLocaleString()

Produces a string value that represents the value of the Number formatted according to the conventions of the host environment’s current locale. This function is implementation-dependent, and it is permissible, but not encouraged, for it to return the same thing as **`toString`**.

NOTE The first parameter to this function is likely to be used in a future version of this standard; it is recommended that implementations do not use this parameter position for anything else.

© ISO/IEC 2002 – All rights reserved

Copyright International Organization for Standardization
Provided by IHS under license with ISO
No reproduction or networking permitted without license from IHS
Not for Resale

15.7.4.4 Number.prototype.valueOf ( )

Returns this number value.

The **`valueOf`** function is not generic; it throws a **TypeError** exception if its **this** value is not a Number object. Therefore, it cannot be transferred to other kinds of objects for use as a method.

15.7.4.5 Number.prototype.toFixed (fractionDigits)

Return a string containing the number represented in fixed-point notation with *fractionDigits* digits after the decimal point. If *fractionDigits* is **undefined**, 0 is assumed. Specifically, perform the following steps:

1. Let *f* be ToInteger(*fractionDigits*). (If *fractionDigits* is **undefined**, this step produces the value **`0`**).
2. If $f < 0$ or $f > 20$, throw a **RangeError** exception.
3. Let *x* be this number value.
4. If *x* is **NaN**, return the string **`"NaN"`**.
5. Let *s* be the empty string.
6. If $x \geq 0$, go to step 9.
7. Let *s* be **`"-"`**.
8. Let $x = -x$.
9. If $x \geq 10^{21}$, let *m* = ToString(*x*) and go to step 20.
10. Let *n* be an integer for which the exact mathematical value of $n \div 10^f - x$ is as close to zero as possible. If there are two such *n*, pick the larger *n*.
11. If $n = 0$, let *m* be the string **`"0"`**. Otherwise, let *m* be the string consisting of the digits of the decimal representation of *n* (in order, with no leading zeroes).
12. If $f = 0$, go to step 20.
13. Let *k* be the number of characters in *m*.
14. If $k > f$, go to step 18.
15. Let *z* be the string consisting of $f+1-k$ occurrences of the character '`0`'.
16. Let *m* be the concatenation of strings *z* and *m*.
17. Let $k = f + 1$.
18. Let a be the first $k-f$ characters of *m*, and let *b* be the remaining *f* characters of *m*.
19. Let *m* be the concatenation of the three strings *a*, **`"."`**, and *b*.
20. Return the concatenation of the strings *s* and *m*.

The **`length`** property of the **`toFixed`** method is **1**.

If the **`toFixed`** method is called with more than one argument, then the behaviour is undefined (see section 15).

An implementation is permitted to extend the behaviour of **`toFixed`** for values of *fractionDigits* less than 0 or greater than 20. In this case **`toFixed`** would not necessarily throw **RangeError** for such values.

NOTE The output of **`toFixed`** may be more precise than **`toString`** for some values because toString only prints enough significant digits to distinguish the number from adjacent number values. For example, **`(1000000000000000128).toString()`** returns **"1000000000000000100"**, while **`(1000000000000000128).toFixed(0)`** returns **"1000000000000000128"**.

15.7.4.6 Number.prototype.toExponential (fractionDigits)

Return a string containing the number represented in exponential notation with one digit before the significand's decimal point and *fractionDigits* digits after the significand's decimal point. If *fractionDigits* is **undefined**, include as many significand digits as necessary to uniquely specify the number (just like in ToString except that in this case the number is always output in exponential notation). Specifically, perform the following steps:

1. Let *x* be this number value.
2. Let *f* be ToInteger(*fractionDigits*).
3. If *x* is **NaN**, return the string **`"NaN"`**.
4. Let *s* be the empty string.
5. If $x \geq 0$, go to step 8.

--`,,```,,,,````-`-`,,`,,`,`,,`---

© ISO/IEC 2002 – All rights reserved
Copyright International Organization for Standardization
Provided by IHS under license with ISO
No reproduction or networking permitted without license from IHS
Not for Resale

6. Let *s* be **"-"**.
7. Let *x* = –*x*.
8. If *x* = +∞, let *m* = **"Infinity"** and go to step 30.
9. If *fractionDigits* is **undefined**, go to step 14.
10. If *f* < 0 or *f* > 20, throw a **RangeError** exception.
11. If *x* = 0, go to step 16.
12. Let *e* and *n* be integers such that $10^f \le n < 10^{f+1}$ and for which the exact mathematical value of $n \times 10^{e-f} - x$ is as close to zero as possible. If there are two such sets of *e* and *n*, pick the *e* and *n* for which $n \times 10^{e-f}$ is larger.
13. Go to step 20.
14. If *x* ≠ 0, go to step 19.
15. Let *f* = 0.
16. Let *m* be the string consisting of *f*+1 occurrences of the character '0'.
17. Let *e* = 0.
18. Go to step 21.
19. Let *e*, *n*, and *f* be integers such that *f* ≥ 0, $10^f \le n < 10^{f+1}$, the number value for $n \times 10^{e-f}$ is *x*, and *f* is as small as possible. Note that the decimal representation of *n* has *f*+1 digits, *n* is not divisible by 10, and the least significant digit of *n* is not necessarily uniquely determined by these criteria.
20. Let *m* be the string consisting of the digits of the decimal representation of *n* (in order, with no leading zeroes).
21. If *f* = 0, go to step 24.
22. Let *a* be the first character of *m*, and let *b* be the remaining *f* characters of *m*.
23. Let *m* be the concatenation of the three strings *a*, **"."**, and *b*.
24. If *e* = 0, let *c* = **"+"** and *d* = **"0"** and go to step 29.
25. If *e* > 0, let *c* = **"+"** and go to step 28.
26. Let *c* = **"-"**.
27. Let *e* = –*e*.
28. Let *d* be the string consisting of the digits of the decimal representation of *e* (in order, with no leading zeroes).
29. Let *m* be the concatenation of the four strings *m*, **"e"**, *c*, and *d*.
30. Return the concatenation of the strings *s* and *m*.

The **length** property of the **toExponential** method is **1**.

If the **toExponential** method is called with more than one argument, then the behaviour is undefined (see section 15).

An implementation is permitted to extend the behaviour of **toExponential** for values of *fractionDigits* less than 0 or greater than 20. In this case **toExponential** would not necessarily throw **RangeError** for such values.

NOTE For implementations that provide more accurate conversions than required by the rules above, it is recommended that the following alternative version of step 19 be used as a guideline:

> Let *e*, *n*, and *f* be integers such that *f* ≥ 0, $10^f \le n < 10^{f+1}$, the number value for $n \times 10^{e-f}$ is *x*, and *f* is as small as possible. If there are multiple possibilities for *n*, choose the value of *n* for which $n \times 10^{e-f}$ is closest in value to *x*. If there are two such possible values of *n*, choose the one that is even.

15.7.4.7 Number.prototype.toPrecision (precision)

Return a string containing the number represented either in exponential notation with one digit before the significand's decimal point and *precision*–1 digits after the significand's decimal point or in fixed notation with *precision* significant digits. If *precision* is **undefined**, call ToString (section 9.8.1) instead. Specifically, perform the following steps:

1. Let *x* be this number value.
2. If *precision* is **undefined**, return ToString(*x*).
3. Let *p* be ToInteger(*precision*).
4. If *x* is **NaN**, return the string **"NaN"**.
5. Let *s* be the empty string.
6. If *x* ≥ 0, go to step 9.
7. Let *s* be **"-"**.
8. Let *x* = –*x*.

© ISO/IEC 2002 – All rights reserved

Copyright International Organization for Standardization
Provided by IHS under license with ISO
No reproduction or networking permitted without license from IHS
Not for Resale

9. If $x = +\infty$, let m = **"Infinity"** and go to step 30.
10. If $p < 1$ or $p > 21$, throw a **RangeError** exception.
11. If $x \neq 0$, go to step 15.
12. Let m be the string consisting of p occurrences of the character '0'.
13. Let $e = 0$.
14. Go to step 18.
15. Let e and n be integers such that $10^{p-1} \leq n < 10^p$ and for which the exact mathematical value of $n \times 10^{e-p+1} - x$ is as close to zero as possible. If there are two such sets of e and n, pick the e and n for which $n \times 10^{e-p+1}$ is larger.
16. Let m be the string consisting of the digits of the decimal representation of n (in order, with no leading zeroes).
17. If $e < -6$ or $e \geq p$, go to step 22.
18. If $e = p-1$, go to step 30.
19. If $e \geq 0$, let m be the concatenation of the first $e+1$ characters of m, the character '**.**', and the remaining $p-(e+1)$ characters of m and go to step 30.
20. Let m be the concatenation of the string **"0."**, $-(e+1)$ occurrences of the character '0', and the string m.
21. Go to step 30.
22. Let a be the first character of m, and let b be the remaining $p-1$ characters of m.
23. Let m be the concatenation of the three strings a, **"."**, and b.
24. If $e = 0$, let c = **"+"** and d = **"0"** and go to step 29.
25. If $e > 0$, let c = **"+"** and go to step 28.
26. Let c = **"-"**.
27. Let $e = -e$.
28. Let d be the string consisting of the digits of the decimal representation of e (in order, with no leading zeroes).
29. Let m be the concatenation of the four strings m, **"e"**, c, and d.
30. Return the concatenation of the strings s and m.

The **length** property of the **toPrecision** method is **1**.

If the **toPrecision** method is called with more than one argument, then the behaviour is undefined (see section 15).

An implementation is permitted to extend the behaviour of **toPrecision** for values of *precision* less than 1 or greater than 21. In this case **toPrecision** would not necessarily throw **RangeError** for such values.

15.7.5 Properties of Number Instances

Number instances have no special properties beyond those inherited from the Number prototype object.

15.8 The Math Object

The Math object is a single object that has some named properties, some of which are functions.

The value of the internal [[Prototype]] property of the Math object is the Object prototype object (section 15.2.3.1). The value of the internal [[Class]] property of the Math object is **"Math"**.

The Math object does not have a [[Construct]] property; it is not possible to use the Math object as a constructor with the **new** operator.

The Math object does not have a [[Call]] property; it is not possible to invoke the Math object as a function.

NOTE In this specification, the phrase "the number value for x" has a technical meaning defined in section 8.5.

15.8.1 Value Properties of the Math Object

15.8.1.1 E

The number value for e, the base of the natural logarithms, which is approximately 2.7182818284590452354.

This property has the attributes { DontEnum, DontDelete, ReadOnly }.

© ISO/IEC 2002 – All rights reserved
Copyright International Organization for Standardization
Provided by IHS under license with ISO
No reproduction or networking permitted without license from IHS
Not for Resale

15.8.1.2 LN10

The number value for the natural logarithm of 10, which is approximately 2.302585092994046.

This property has the attributes { DontEnum, DontDelete, ReadOnly }.

15.8.1.3 LN2

The number value for the natural logarithm of 2, which is approximately 0.6931471805599453.

This property has the attributes { DontEnum, DontDelete, ReadOnly }.

15.8.1.4 LOG2E

The number value for the base-2 logarithm of *e*, the base of the natural logarithms; this value is approximately 1.4426950408889634.

This property has the attributes { DontEnum, DontDelete, ReadOnly }.

NOTE The value of **`Math.LOG2E`** is approximately the reciprocal of the value of **`Math.LN2`**.

15.8.1.5 LOG10E

The number value for the base-10 logarithm of *e*, the base of the natural logarithms; this value is approximately 0.4342944819032518.

This property has the attributes { DontEnum, DontDelete, ReadOnly }.

NOTE The value of **`Math.LOG10E`** is approximately the reciprocal of the value of **`Math.LN10`**.

15.8.1.6 PI

The number value for π, the ratio of the circumference of a circle to its diameter, which is approximately 3.1415926535897932.

This property has the attributes { DontEnum, DontDelete, ReadOnly }.

15.8.1.7 SQRT1_2

The number value for the square root of 1/2, which is approximately 0.7071067811865476.

This property has the attributes { DontEnum, DontDelete, ReadOnly }.

NOTE The value of **`Math.SQRT1_2`** is approximately the reciprocal of the value of **`Math.SQRT2`**.

15.8.1.8 SQRT2

The number value for the square root of 2, which is approximately 1.4142135623730951.

This property has the attributes { DontEnum, DontDelete, ReadOnly }.

15.8.2 Function Properties of the Math Object

Every function listed in this section applies the ToNumber operator to each of its arguments (in left-to-right order if there is more than one) and then performs a computation on the resulting number value(s).

In the function descriptions below, the symbols NaN, -0, $+0$, $-\infty$ and $+\infty$ refer to the number values described in section 8.5.

NOTE The behaviour of the functions **`acos`**, **`asin`**, **`atan`**, **`atan2`**, **`cos`**, **`exp`**, **`log`**, **`pow`**, **`sin`**, and **`sqrt`** is not precisely specified here except to require specific results for certain argument values that represent boundary cases of interest. For other argument values, these functions are intended to compute approximations to the results of familiar mathematical functions, but

© ISO/IEC 2002 – All rights reserved

Copyright International Organization for Standardization
Provided by IHS under license with ISO
No reproduction or networking permitted without license from IHS
Not for Resale

some latitude is allowed in the choice of approximation algorithms. The general intent is that an implementer should be able to use the same mathematical library for ECMAScript on a given hardware platform that is available to C programmers on that platform.

Although the choice of algorithms is left to the implementation, it is recommended (but not specified by this standard) that implementations use the approximation algorithms for IEEE 754 arithmetic contained in **fdlibm**, the freely distributable mathematical library from Sun Microsystems (fdlibm-comment@sunpro.eng.sun.com). This specification also requires specific results for certain argument values that represent boundary cases of interest

15.8.2.1 abs (x)

Returns the absolute value of *x*; the result has the same magnitude as *x* but has positive sign.

- If *x* is NaN, the result is NaN.
- If *x* is −0, the result is +0.
- If *x* is −∞, the result is +∞.

15.8.2.2 acos (x)

Returns an implementation-dependent approximation to the arc cosine of *x*. The result is expressed in radians and ranges from +0 to +π.

- If *x* is NaN, the result is NaN.
- If *x* is greater than 1, the result is NaN.
- If *x* is less than –1, the result is NaN.
- If *x* is exactly 1, the result is +0.

15.8.2.3 asin (x)

Returns an implementation-dependent approximation to the arc sine of *x*. The result is expressed in radians and ranges from −π/2 to +π/2.

- If *x* is NaN, the result is NaN.
- If *x* is greater than 1, the result is NaN.
- If *x* is less than –1, the result is NaN.
- If *x* is +0, the result is +0.
- If *x* is −0, the result is −0.

15.8.2.4 atan (x)

Returns an implementation-dependent approximation to the arc tangent of *x*. The result is expressed in radians and ranges from −π/2 to +π/2.

- If *x* is NaN, the result is NaN.
- If *x* is +0, the result is +0.
- If *x* is −0, the result is −0.
- If *x* is +∞, the result is an implementation-dependent approximation to +π/2.
- If *x* is −∞, the result is an implementation-dependent approximation to −π/2.

15.8.2.5 atan2 (y, x)

Returns an implementation-dependent approximation to the arc tangent of the quotient *y*/*x* of the arguments *y* and *x*, where the signs of *y* and *x* are used to determine the quadrant of the result. Note that it is intentional and traditional for the two-argument arc tangent function that the argument named *y* be first and the argument named *x* be second. The result is expressed in radians and ranges from −π to +π.

© ISO/IEC 2002 – All rights reserved
Copyright International Organization for Standardization
Provided by IHS under license with ISO
No reproduction or networking permitted without license from IHS
Not for Resale

- If either *x* or *y* is NaN, the result is NaN.
- If *y*>0 and *x* is +0, the result is an implementation-dependent approximation to +π/2.
- If *y*>0 and *x* is –0, the result is an implementation-dependent approximation to +π/2.
- If *y* is +0 and *x*>0, the result is +0.
- If *y* is +0 and *x* is +0, the result is +0.
- If *y* is +0 and *x* is –0, the result is an implementation-dependent approximation to +π.
- If *y* is +0 and *x*<0, the result is an implementation-dependent approximation to +π.
- If *y* is –0 and *x*>0, the result is –0.
- If *y* is –0 and *x* is +0, the result is –0.
- If *y* is –0 and *x* is –0, the result is an implementation-dependent approximation to –π.
- If *y* is –0 and *x*<0, the result is an implementation-dependent approximation to –π.
- If *y*<0 and *x* is +0, the result is an implementation-dependent approximation to –π/2.
- If *y*<0 and *x* is –0, the result is an implementation-dependent approximation to –π/2.
- If *y*>0 and *y* is finite and *x* is +∞, the result is +0.
- If *y*>0 and *y* is finite and *x* is –∞, the result if an implementation-dependent approximation to +π.
- If *y*<0 and *y* is finite and *x* is +∞, the result is –0.
- If *y*<0 and *y* is finite and *x* is –∞, the result is an implementation-dependent approximation to –π.
- If *y* is +∞ and *x* is finite, the result is an implementation-dependent approximation to +π/2.
- If *y* is –∞ and *x* is finite, the result is an implementation-dependent approximation to –π/2.
- If *y* is +∞ and *x* is +∞, the result is an implementation-dependent approximation to +π/4.
- If *y* is +∞ and *x* is –∞, the result is an implementation-dependent approximation to +3π/4.
- If *y* is –∞ and *x* is +∞, the result is an implementation-dependent approximation to –π/4.
- If *y* is –∞ and *x* is –∞, the result is an implementation-dependent approximation to –3π/4.

15.8.2.6 ceil (x)

Returns the smallest (closest to **–∞**) number value that is not less than *x* and is equal to a mathematical integer. If *x* is already an integer, the result is *x*.

- If *x* is NaN, the result is NaN.
- If *x* is +0, the result is +0.
- If *x* is –0, the result is –0.
- If *x* is +∞, the result is +∞.
- If *x* is –∞, the result is –∞.
- If *x* is less than `0` but greater than `-1`, the result is –0.

The value of **`Math.ceil(x)`** is the same as the value of **`-Math.floor(-x)`**.

15.8.2.7 cos (x)

Returns an implementation-dependent approximation to the cosine of *x*. The argument is expressed in radians.

- If *x* is NaN, the result is NaN.
- If *x* is +0, the result is 1.
- If *x* is –0, the result is 1.
- If *x* is +∞, the result is NaN.
- If *x* is –∞, the result is NaN.

15.8.2.8 exp (x)

Returns an implementation-dependent approximation to the exponential function of *x* (*e* raised to the power of *x*, where *e* is the base of the natural logarithms).

© ISO/IEC 2002 – All rights reserved

Copyright International Organization for Standardization
Provided by IHS under license with ISO
No reproduction or networking permitted without license from IHS
Not for Resale

- If *x* is NaN, the result is NaN.
- If *x* is +0, the result is 1.
- If *x* is –0, the result is 1.
- If *x* is +∞, the result is +∞.
- If *x* is –∞, the result is +0.

15.8.2.9 floor (x)

Returns the greatest (closest to **+∞**) number value that is not greater than *x* and is equal to a mathematical integer. If *x* is already an integer, the result is *x*.

- If *x* is NaN, the result is NaN.
- If *x* is +0, the result is +0.
- If *x* is –0, the result is –0.
- If *x* is +∞, the result is +∞.
- If *x* is –∞, the result is –∞.
- If *x* is greater than `0` but less than `1`, the result is `+0`.

NOTE The value of **`Math.floor(x)`** is the same as the value of **`-Math.ceil(-x)`**.

15.8.2.10 log (x)

Returns an implementation-dependent approximation to the natural logarithm of *x*.

- If *x* is NaN, the result is NaN.
- If *x* is less than 0, the result is NaN.
- If *x* is +0 or –0, the result is –∞.
- If *x* is 1, the result is +0.
- If *x* is +∞, the result is +∞.

15.8.2.11 max ([value1 [, value2 [, …]]])

Given zero or more arguments, calls ToNumber on each of the arguments and returns the largest of the resulting values.

- If no arguments are given, the result is –∞.
- If any value is NaN, the result is NaN.
- The comparison of values to determine the largest value is done as in section 11.8.5 except that +0 is considered to be larger than –0.

The **`length`** property of the **`max`** method is **2**.

15.8.2.12 min ([value1 [, value2 [, …]]])

Given zero or more arguments, calls ToNumber on each of the arguments and returns the smallest of the resulting values.

- If no arguments are given, the result is +∞.
- If any value is NaN, the result is NaN.
- The comparison of values to determine the smallest value is done as in section 11.8.5 except that +0 is considered to be larger than –0.

The **`length`** property of the **`min`** method is **2**.

© ISO/IEC 2002 – All rights reserved
Copyright International Organization for Standardization
Provided by IHS under license with ISO
No reproduction or networking permitted without license from IHS
Not for Resale

15.8.2.13 pow (x, y)

Returns an implementation-dependent approximation to the result of raising *x* to the power *y*.

- If *y* is NaN, the result is NaN.
- If *y* is +0, the result is 1, even if *x* is NaN.
- If *y* is –0, the result is 1, even if *x* is NaN.
- If *x* is NaN and *y* is nonzero, the result is NaN.
- If abs(*x*)>1 and *y* is +∞, the result is +∞.
- If abs(*x*)>1 and *y* is –∞, the result is +0.
- If abs(*x*)==1 and *y* is +∞, the result is NaN.
- If abs(*x*)==1 and *y* is –∞, the result is NaN.
- If abs(*x*)<1 and *y* is +∞, the result is +0.
- If abs(*x*)<1 and *y* is –∞, the result is +∞.
- If *x* is +∞ and *y*>0, the result is +∞.
- If *x* is +∞ and *y*<0, the result is +0.
- If *x* is –∞ and *y*>0 and *y* is an odd integer, the result is –∞.
- If *x* is –∞ and *y*>0 and *y* is not an odd integer, the result is +∞.
- If *x* is –∞ and *y*<0 and *y* is an odd integer, the result is –0.
- If *x* is –∞ and *y*<0 and *y* is not an odd integer, the result is +0.
- If *x* is +0 and *y*>0, the result is +0.
- If *x* is +0 and *y*<0, the result is +∞.
- If *x* is –0 and *y*>0 and *y* is an odd integer, the result is –0.
- If *x* is –0 and *y*>0 and *y* is not an odd integer, the result is +0.
- If *x* is –0 and *y*<0 and *y* is an odd integer, the result is –∞.
- If *x* is –0 and *y*<0 and *y* is not an odd integer, the result is +∞.
- If *x*<0 and *x* is finite and *y* is finite and *y* is not an integer, the result is NaN.

15.8.2.14 random ( )

Returns a number value with positive sign, greater than or equal to 0 but less than 1, chosen randomly or pseudo randomly with approximately uniform distribution over that range, using an implementation-dependent algorithm or strategy. This function takes no arguments.

15.8.2.15 round (x)

Returns the number value that is closest to *x* and is equal to a mathematical integer. If two integer number values are equally close to *x*, then the result is the number value that is closer to +∞. If *x* is already an integer, the result is *x*.

- If *x* is NaN, the result is NaN.
- If *x* is +0, the result is +0.
- If *x* is –0, the result is –0.
- If *x* is +∞, the result is +∞.
- If *x* is –∞, the result is –∞.
- If *x* is greater than `0` but less than `0.5`, the result is +0.
- If *x* is less than `0` but greater than or equal to `-0.5`, the result is –0.

NOTE Math.round(3.5) returns 4, but Math.round(–3.5) returns –3.

NOTE The value of **`Math.round(x)`** is the same as the value of **`Math.floor(x+0.5)`**, except when **`x`** is –0 or is less than `0` but greater than or equal to `-0.5`; for these cases **`Math.round(x)`** returns –0, but **`Math.floor(x+0.5)`** returns +0.

© ISO/IEC 2002 – All rights reserved

Copyright International Organization for Standardization
Provided by IHS under license with ISO
No reproduction or networking permitted without license from IHS
Not for Resale

15.8.2.16 sin (x)

Returns an implementation-dependent approximation to the sine of *x*. The argument is expressed in radians.

- If *x* is NaN, the result is NaN.
- If *x* is +0, the result is +0.
- If *x* is –0, the result is –0.
- If *x* is +∞ or –∞, the result is NaN.

15.8.2.17 sqrt (x)

Returns an implementation-dependent approximation to the square root of *x*.

- If *x* is NaN, the result is NaN.
- If *x* less than 0, the result is NaN.
- If *x* is +0, the result is +0.
- If *x* is –0, the result is –0.
- If *x* is +∞, the result is +∞.

15.8.2.18 tan (x)

Returns an implementation-dependent approximation to the tangent of *x*. The argument is expressed in radians.

- If *x* is NaN, the result is NaN.
- If *x* is +0, the result is +0.
- If *x* is –0, the result is –0.
- If *x* is +∞ or –∞, the result is NaN.

15.9 Date Objects

15.9.1 Overview of Date Objects and Definitions of Internal Operators

A Date object contains a number indicating a particular instant in time to within a millisecond. The number may also be **NaN**, indicating that the Date object does not represent a specific instant of time.

The following sections define a number of functions for operating on time values. Note that, in every case, if any argument to such a function is **NaN**, the result will be **NaN**.

15.9.1.1 Time Range

Time is measured in ECMAScript in milliseconds since 01 January, 1970 UTC. Leap seconds are ignored. It is assumed that there are exactly 86,400,000 milliseconds per day. ECMAScript number values can represent all integers from –9,007,199,254,740,991 to 9,007,199,254,740,991; this range suffices to measure times to millisecond precision for any instant that is within approximately 285,616 years, either forward or backward, from 01 January, 1970 UTC.

The actual range of times supported by ECMAScript Date objects is slightly smaller: exactly –100,000,000 days to 100,000,000 days measured relative to midnight at the beginning of 01 January, 1970 UTC. This gives a range of 8,640,000,000,000,000 milliseconds to either side of 01 January, 1970 UTC.

The exact moment of midnight at the beginning of 01 January, 1970 UTC is represented by the value **+0**.

15.9.1.2 Day Number and Time within Day

A given time value *t* belongs to day number

Day(*t*) = floor(*t* / msPerDay)

© ISO/IEC 2002 – All rights reserved
Copyright International Organization for Standardization
Provided by IHS under license with ISO
No reproduction or networking permitted without license from IHS
Not for Resale

where the number of milliseconds per day is

msPerDay = 86400000

The remainder is called the time within the day:

TimeWithinDay(*t*) = *t* modulo msPerDay

15.9.1.3 Year Number

ECMAScript uses an extrapolated Gregorian system to map a day number to a year number and to determine the month and date within that year. In this system, leap years are precisely those which are (divisible by 4) and ((not divisible by 100) or (divisible by 400)). The number of days in year number *y* is therefore defined by

DaysInYear(*y*) = 365 if (*y* modulo 4) ≠ 0
= 366 if (*y* modulo 4) = 0 and (y modulo 100) ≠ 0
= 365 if (*y* modulo 100) = 0 and (y modulo 400) ≠ 0
= 366 if (*y* modulo 400) = 0

All non-leap years have 365 days with the usual number of days per month and leap years have an extra day in February. The day number of the first day of year *y* is given by:

DayFromYear(y) = 365 × (y−1970) + floor((y−1969)/4) − floor((y−1901)/100) + floor((y−1601)/400)

The time value of the start of a year is:

TimeFromYear(*y*) = msPerDay × DayFromYear(*y*)

A time value determines a year by:

YearFromTime(*t*) = the largest integer *y* (closest to positive infinity) such that TimeFromYear(*y*) ≤ *t*

The leap-year function is 1 for a time within a leap year and otherwise is zero:

InLeapYear(*t*) = 0 if DaysInYear(YearFromTime(*t*)) = 365
= 1 if DaysInYear(YearFromTime(*t*)) = 366

15.9.1.4 Month Number

Months are identified by an integer in the range 0 to 11, inclusive. The mapping MonthFromTime(*t*) from a time value *t* to a month number is defined by:

MonthFromTime(*t*)	= 0	if	0	≤ DayWithinYear(*t*) < 31
	= 1	if	31	≤ DayWithinYear (*t*) < 59+InLeapYear(*t*)
	= 2	if	59+InLeapYear(*t*)	≤ DayWithinYear (*t*) < 90+InLeapYear(*t*)
	= 3	if	90+InLeapYear(*t*)	≤ DayWithinYear (*t*) < 120+InLeapYear(*t*)
	= 4	if	120+InLeapYear(*t*)	≤ DayWithinYear (*t*) < 151+InLeapYear(*t*)
	= 5	if	151+InLeapYear(*t*)	≤ DayWithinYear (*t*) < 181+InLeapYear(*t*)
	= 6	if	181+InLeapYear(*t*)	≤ DayWithinYear (*t*) < 212+InLeapYear(*t*)
	= 7	if	212+InLeapYear(*t*)	≤ DayWithinYear (*t*) < 243+InLeapYear(*t*)
	= 8	if	243+InLeapYear(*t*)	≤ DayWithinYear (*t*) < 273+InLeapYear(*t*)
	= 9	if	273+InLeapYear(*t*)	≤ DayWithinYear (*t*) < 304+InLeapYear(*t*)
	= 10	if	304+InLeapYear(*t*)	≤ DayWithinYear (*t*) < 334+InLeapYear(*t*)
	= 11	if	334+InLeapYear(*t*)	≤ DayWithinYear (*t*) < 365+InLeapYear(*t*)

where

DayWithinYear(*t*)= Day(*t*)−DayFromYear(YearFromTime(*t*))

A month value of 0 specifies January; 1 specifies February; 2 specifies March; 3 specifies April; 4 specifies May; 5 specifies June; 6 specifies July; 7 specifies August; 8 specifies September; 9 specifies October; 10 specifies

© ISO/IEC 2002 – All rights reserved

Copyright International Organization for Standardization
Provided by IHS under license with ISO
No reproduction or networking permitted without license from IHS
Not for Resale

November; and 11 specifies December. Note that MonthFromTime(0) = 0, corresponding to Thursday, 01 January, 1970.

15.9.1.5 Date Number

A date number is identified by an integer in the range 1 through 31, inclusive. The mapping DateFromTime(*t*) from a time value *t* to a month number is defined by:

DateFromTime(*t*) = DayWithinYear(*t*)+1 if MonthFromTime(*t*)=0
= DayWithinYear(*t*)−30 if MonthFromTime(*t*)=1
= DayWithinYear(*t*)−58−InLeapYear(*t*) if MonthFromTime(*t*)=2
= DayWithinYear(*t*)−89−InLeapYear(*t*) if MonthFromTime(*t*)=3
= DayWithinYear(*t*)−119−InLeapYear(*t*) if MonthFromTime(*t*)=4
= DayWithinYear(*t*)−150−InLeapYear(*t*) if MonthFromTime(*t*)=5
= DayWithinYear(*t*)−180−InLeapYear(*t*) if MonthFromTime(*t*)=6
= DayWithinYear(*t*)−211−InLeapYear(*t*) if MonthFromTime(*t*)=7
= DayWithinYear(*t*)−242−InLeapYear(*t*) if MonthFromTime(*t*)=8
= DayWithinYear(*t*)−272−InLeapYear(*t*) if MonthFromTime(*t*)=9
= DayWithinYear(*t*)−303−InLeapYear(*t*) if MonthFromTime(*t*)=10
= DayWithinYear(*t*)−333−InLeapYear(*t*) if MonthFromTime(*t*)=11

15.9.1.6 Week Day

The weekday for a particular time value *t* is defined as

WeekDay(*t*) = (Day(*t*) + 4) modulo 7

A weekday value of 0 specifies Sunday; 1 specifies Monday; 2 specifies Tuesday; 3 specifies Wednesday; 4 specifies Thursday; 5 specifies Friday; and 6 specifies Saturday. Note that WeekDay(0) = 4, corresponding to Thursday, 01 January, 1970.

15.9.1.7 Local Time Zone Adjustment

An implementation of ECMAScript is expected to determine the local time zone adjustment. The local time zone adjustment is a value LocalTZA measured in milliseconds which when added to UTC represents the local *standard* time. Daylight saving time is *not* reflected by LocalTZA. The value LocalTZA does not vary with time but depends only on the geographic location.

15.9.1.8 Daylight Saving Time Adjustment

An implementation of ECMAScript is expected to determine the daylight saving time algorithm. The algorithm to determine the daylight saving time adjustment DaylightSavingTA(*t*), measured in milliseconds, must depend only on four things:

(1) the time since the beginning of the year

t – TimeFromYear(YearFromTime(*t*))

(2) whether *t* is in a leap year

InLeapYear(*t*)

(3) the week day of the beginning of the year

WeekDay(TimeFromYear(YearFromTime(*t*))

and (4) the geographic location.

The implementation of ECMAScript should not try to determine whether the exact time was subject to daylight saving time, but just whether daylight saving time would have been in effect if the current daylight saving time algorithm had been used at the time. This avoids complications such as taking into account the years that the locale observed daylight saving time year round.

© ISO/IEC 2002 – All rights reserved
Copyright International Organization for Standardization
Provided by IHS under license with ISO
No reproduction or networking permitted without license from IHS
Not for Resale

If the host environment provides functionality for determining daylight saving time, the implementation of ECMAScript is free to map the year in question to an equivalent year (same leap-year-ness and same starting week day for the year) for which the host environment provides daylight saving time information. The only restriction is that all equivalent years should produce the same result.

15.9.1.9 Local Time

Conversion from UTC to local time is defined by

LocalTime(*t*) = *t* + LocalTZA + DaylightSavingTA(*t*)

Conversion from local time to UTC is defined by

UTC(*t*) = *t* – LocalTZA – DaylightSavingTA(*t* – LocalTZA)

Note that UTC(LocalTime(*t*)) is not necessarily always equal to *t*.

15.9.1.10 Hours, Minutes, Second, and Milliseconds

The following functions are useful in decomposing time values:

HourFromTime(*t*) = floor(*t* / msPerHour) modulo HoursPerDay

MinFromTime(*t*) = floor(*t* / msPerMinute) modulo MinutesPerHour

SecFromTime(*t*) = floor(*t* / msPerSecond) modulo SecondsPerMinute

msFromTime(*t*) = *t* modulo msPerSecond

where

HoursPerDay = 24

MinutesPerHour = 60

SecondsPerMinute = 60

msPerSecond = 1000

msPerMinute = msPerSecond × SecondsPerMinute = 60000

msPerHour = msPerMinute × MinutesPerHour = 3600000

15.9.1.11 MakeTime (hour, min, sec, ms)

The operator MakeTime calculates a number of milliseconds from its four arguments, which must be ECMAScript number values. This operator functions as follows:

1. If *hour* is not finite or *min* is not finite or *sec* is not finite or *ms* is not finite, return **NaN**.
2. Call ToInteger(*hour*).
3. Call ToInteger(*min*).
4. Call ToInteger(*sec*).
5. Call ToInteger(*ms*).
6. Compute Result(2) ***** msPerHour **+** Result(3) ***** msPerMinute **+** Result(4) ***** msPerSecond **+** Result(5), performing the arithmetic according to IEEE 754 rules (that is, as if using the ECMAScript operators ***** and **+**).
7. Return Result(6).

15.9.1.12 MakeDay (year, month, date)

The operator MakeDay calculates a number of days from its three arguments, which must be ECMAScript number values. This operator functions as follows:

© ISO/IEC 2002 – All rights reserved

Copyright International Organization for Standardization
Provided by IHS under license with ISO
No reproduction or networking permitted without license from IHS
Not for Resale

1. If *year* is not finite or *month* is not finite or *date* is not finite, return **NaN**.
2. Call ToInteger(*year*).
3. Call ToInteger(*month*).
4. Call ToInteger(*date*).
5. Compute Result(2) + floor(Result(3)/12).
6. Compute Result(3) modulo 12.
7. Find a value *t* such that YearFromTime(*t*) **==** Result(5) and MonthFromTime(*t*) **==** Result(6) and DateFromTime(*t*) **==** 1; but if this is not possible (because some argument is out of range), return **NaN**.
8. Compute Day(Result(7)) + Result(4) − 1.
9. Return Result(8).

15.9.1.13 MakeDate (day, time)

The operator MakeDate calculates a number of milliseconds from its two arguments, which must be ECMAScript number values. This operator functions as follows:

1. If *day* is not finite or *time* is not finite, return **NaN**.
2. Compute *day* × msPerDay + *time*.
3. Return Result(2).

15.9.1.14 TimeClip (time)

The operator TimeClip calculates a number of milliseconds from its argument, which must be an ECMAScript number value. This operator functions as follows:

1. If *time* is not finite, return **NaN**.
2. If abs(Result(1)) > **8.64 x 10^{15}**, return **NaN**.
3. Return an implementation-dependent choice of either ToInteger(Result(2)) or ToInteger(Result(2)) + (**+0**). (Adding a positive zero converts –**0** to **+0**.)

NOTE The point of step 3 is that an implementation is permitted a choice of internal representations of time values, for example as a 64-bit signed integer or as a 64-bit floating-point value. Depending on the implementation, this internal representation may or may not distinguish –**0** and **+0**.

15.9.2 The Date Constructor Called as a Function

When **`Date`** is called as a function rather than as a constructor, it returns a string representing the current time (UTC).

NOTE The function call **`Date(…)`** is *not* equivalent to the object creation expression **`new Date(…)`** with the same arguments.

15.9.2.1 Date ([year [, month [, date [, hours [, minutes [, seconds [, ms]]]]]]])

All of the arguments are optional; any arguments supplied are accepted but are completely ignored. A string is created and returned as if by the expression **`(new Date()).toString()`**.

15.9.3 The Date Constructor

When **`Date`** is called as part of a **`new`** expression, it is a constructor: it initialises the newly created object.

15.9.3.1 new Date (year, month [, date [, hours [, minutes [, seconds [, ms]]]]])

When **Date** is called with two to seven arguments, it computes the date from *year*, *month*, and (optionally) *date*, *hours*, *minutes*, *seconds* and *ms*.

The [[Prototype]] property of the newly constructed object is set to the original Date prototype object, the one that is the initial value of **`Date.prototype`** (section 15.9.4.1).

The [[Class]] property of the newly constructed object is set to **`"Date"`**.

--`,,```,,,,````-`-`,,`,,`,`,,`---

© ISO/IEC 2002 – All rights reserved
Copyright International Organization for Standardization
Provided by IHS under license with ISO
No reproduction or networking permitted without license from IHS
Not for Resale

The [[Value]] property of the newly constructed object is set as follows:

1. Call ToNumber(*year*).
2. Call ToNumber(*month*).
3. If *date* is supplied use ToNumber(*date*); else use **1**.
4. If *hours* is supplied use ToNumber(*hours*); else use **0**.
5. If *minutes* is supplied use ToNumber(*minutes*); else use **0**.
6. If *seconds* is supplied use ToNumber(*seconds*); else use **0**.
7. If *ms* is supplied use ToNumber(*ms*); else use **0**.
8. If Result(1) is not **NaN** and 0 ≤ ToInteger(Result(1)) ≤ 99, Result(8) is 1900+ToInteger(Result(1)); otherwise, Result(8) is Result(1).
9. Compute MakeDay(Result(8), Result(2), Result(3)).
10. Compute MakeTime(Result(4), Result(5), Result(6), Result(7)).
11. Compute MakeDate(Result(9), Result(10)).
12. Set the [[Value]] property of the newly constructed object to TimeClip(UTC(Result(11))).

15.9.3.2 new Date (value)

The [[Prototype]] property of the newly constructed object is set to the original Date prototype object, the one that is the initial value of **`Date.prototype`** (section 15.9.4.1).

The [[Class]] property of the newly constructed object is set to **`"Date"`**.

The [[Value]] property of the newly constructed object is set as follows:

1. Call ToPrimitive(*value*).
2. If Type(Result(1)) is String, then go to step 5.
3. Let *V* be ToNumber(Result(1)).
4. Set the [[Value]] property of the newly constructed object to TimeClip(*V*) and return.
5. Parse Result(1) as a date, in exactly the same manner as for the **`parse`** method (section 15.9.4.2); let *V* be the time value for this date.
6. Go to step 4.

15.9.3.3 new Date ( )

The [[Prototype]] property of the newly constructed object is set to the original Date prototype object, the one that is the initial value of **`Date.prototype`** (section 15.9.4.1).

The [[Class]] property of the newly constructed object is set to **`"Date"`**.

The [[Value]] property of the newly constructed object is set to the current time (UTC).

15.9.4 Properties of the Date Constructor

The value of the internal [[Prototype]] property of the Date constructor is the Function prototype object (section 15.3.4).

Besides the internal properties and the **`length`** property (whose value is **`7`**), the Date constructor has the following properties:

15.9.4.1 Date.prototype

The initial value of **`Date.prototype`** is the built-in Date prototype object (section 15.9.5).

This property has the attributes { DontEnum, DontDelete, ReadOnly }.

--`,,```,,,,````-`-`,,`,,`,`,,`---

© ISO/IEC 2002 – All rights reserved

Copyright International Organization for Standardization
Provided by IHS under license with ISO
No reproduction or networking permitted without license from IHS
Not for Resale

15.9.4.2 Date.parse (string)

The **parse** function applies the ToString operator to its argument and interprets the resulting string as a date; it returns a number, the UTC time value corresponding to the date. The string may be interpreted as a local time, a UTC time, or a time in some other time zone, depending on the contents of the string.

If *x* is any Date object whose milliseconds amount is zero within a particular implementation of ECMAScript, then all of the following expressions should produce the same numeric value in that implementation, if all the properties referenced have their initial values:

```
x.valueOf()

Date.parse(x.toString())

Date.parse(x.toUTCString())
```

However, the expression

```
Date.parse(x.toLocaleString())
```

is not required to produce the same number value as the preceding three expressions and, in general, the value produced by **Date.parse** is implementation-dependent when given any string value that could not be produced in that implementation by the **toString** or **toUTCString** method.

15.9.4.3 Date.UTC (year, month [, date [, hours [, minutes [, seconds [, ms]]]]])

When the **UTC** function is called with fewer than two arguments, the behaviour is implementation-dependent. When the **UTC** function is called with two to seven arguments, it computes the date from *year*, *month* and (optionally) *date*, *hours*, *minutes*, *seconds* and *ms*. The following steps are taken:

1. Call ToNumber(*year*).
2. Call ToNumber(*month*).
3. If *date* is supplied use ToNumber(*date*); else use **1**.
4. If *hours* is supplied use ToNumber(*hours*); else use **0**.
5. If *minutes* is supplied use ToNumber(*minutes*); else use **0**.
6. If *seconds* is supplied use ToNumber(*seconds*); else use **0**.
7. If *ms* is supplied use ToNumber(*ms*); else use **0**.
8. If Result(1) is not **NaN** and $0 \leq$ ToInteger(Result(1)) ≤ 99, Result(8) is 1900+ToInteger(Result(1)); otherwise, Result(8) is Result(1).
9. Compute MakeDay(Result(8), Result(2), Result(3)).
10. Compute MakeTime(Result(4), Result(5), Result(6), Result(7)).
11. Return TimeClip(MakeDate(Result(9), Result(10))).

The **length** property of the **UTC** function is **7**.

NOTE The UTC function differs from the Date constructor in two ways: it returns a time value as a number, rather than creating a Date object, and it interprets the arguments in UTC rather than as local time.

15.9.5 Properties of the Date Prototype Object

The Date prototype object is itself a Date object (its [[Class]] is **"Date"**) whose value is **NaN**.

The value of the internal [[Prototype]] property of the Date prototype object is the Object prototype object (section 15.2.3.1).

In following descriptions of functions that are properties of the Date prototype object, the phrase “this Date object” refers to the object that is the **this** value for the invocation of the function. None of these functions are generic; a **TypeError** exception is thrown if the **this** value is not an object for which the value of the internal [[Class]] property is **"Date"**. Also, the phrase “this time value” refers to the number value for the time represented by this Date object, that is, the value of the internal [[Value]] property of this Date object.

--`,,```,,,,````-`-`,,`,,`,`,,`---

© ISO/IEC 2002 – All rights reserved
Copyright International Organization for Standardization
Provided by IHS under license with ISO
No reproduction or networking permitted without license from IHS
Not for Resale

15.9.5.1 Date.prototype.constructor

The initial value of **`Date.prototype.constructor`** is the built-in **`Date`** constructor.

15.9.5.2 Date.prototype.toString ( )

This function returns a string value. The contents of the string are implementation-dependent, but are intended to represent the Date in the current time zone in a convenient, human-readable form.

NOTE For any Date value `d` whose milliseconds amount is zero, the result of `Date.prototype.parse(d.toString())` (section 15.9.4.2) is equal to `d`.

15.9.5.3 Date.prototype.toDateString ( )

This function returns a string value. The contents of the string are implementation-dependent, but are intended to represent the “date” portion of the Date in the current time zone in a convenient, human-readable form.

15.9.5.4 Date.prototype.toTimeString ( )

This function returns a string value. The contents of the string are implementation-dependent, but are intended to represent the “time” portion of the Date in the current time zone in a convenient, human-readable form.

15.9.5.5 Date.prototype.toLocaleString ( )

This function returns a string value. The contents of the string are implementation-dependent, but are intended to represent the Date in the current time zone in a convenient, human-readable form that corresponds to the conventions of the host environment’s current locale.

NOTE The first parameter to this function is likely to be used in a future version of this standard; it is recommended that implementations do not use this parameter position for anything else.

15.9.5.6 Date.prototype.toLocaleDateString ( )

This function returns a string value. The contents of the string are implementation-dependent, but are intended to represent the “date” portion of the Date in the current time zone in a convenient, human-readable form that corresponds to the conventions of the host environment’s current locale.

NOTE The first parameter to this function is likely to be used in a future version of this standard; it is recommended that implementations do not use this parameter position for anything else.

15.9.5.7 Date.prototype.toLocaleTimeString ( )

This function returns a string value. The contents of the string are implementation-dependent, but are intended to represent the “time” portion of the Date in the current time zone in a convenient, human-readable form that corresponds to the conventions of the host environment’s current locale.

NOTE The first parameter to this function is likely to be used in a future version of this standard; it is recommended that implementations do not use this parameter position for anything else.

15.9.5.8 Date.prototype.valueOf ( )

The **`valueOf`** function returns a number, which is this time value.

15.9.5.9 Date.prototype.getTime ( )

1. If the **this** value is not an object whose [[Class]] property is **`"Date"`**, throw a **TypeError** exception.
2. Return this time value.

15.9.5.10 Date.prototype.getFullYear ( )

1. Let *t* be this time value.
2. If *t* is **NaN**, return **NaN**.
3. Return YearFromTime(LocalTime(*t*)).

© ISO/IEC 2002 – All rights reserved

Copyright International Organization for Standardization
Provided by IHS under license with ISO
No reproduction or networking permitted without license from IHS
Not for Resale

15.9.5.11 Date.prototype.getUTCFullYear ( )

1. Let *t* be this time value.
2. If *t* is **NaN**, return **NaN**.
3. Return YearFromTime(*t*).

15.9.5.12 Date.prototype.getMonth ( )

1. Let *t* be this time value.
2. If *t* is **NaN**, return **NaN**.
3. Return MonthFromTime(LocalTime(*t*)).

15.9.5.13 Date.prototype.getUTCMonth ( )

1. Let *t* be this time value.
2. If *t* is **NaN**, return **NaN**.
3. Return MonthFromTime(*t*).

15.9.5.14 Date.prototype.getDate ( )

1. Let *t* be this time value.
2. If *t* is **NaN**, return **NaN**.
3. Return DateFromTime(LocalTime(*t*)).

15.9.5.15 Date.prototype.getUTCDate ( )

1. Let *t* be this time value.
2. If *t* is **NaN**, return **NaN**.
3. Return DateFromTime(*t*).

15.9.5.16 Date.prototype.getDay ( )

1. Let *t* be this time value.
2. If *t* is **NaN**, return **NaN**.
3. Return WeekDay(LocalTime(*t*)).

15.9.5.17 Date.prototype.getUTCDay ( )

1. Let *t* be this time value.
2. If *t* is **NaN**, return **NaN**.
3. Return WeekDay(*t*).

15.9.5.18 Date.prototype.getHours ( )

1. Let *t* be this time value.
2. If *t* is **NaN**, return **NaN**.
3. Return HourFromTime(LocalTime(*t*)).

15.9.5.19 Date.prototype.getUTCHours ( )

1. Let *t* be this time value.
2. If *t* is **NaN**, return **NaN**.
3. Return HourFromTime(*t*).

15.9.5.20 Date.prototype.getMinutes ( )

1. Let *t* be this time value.
2. If *t* is **NaN**, return **NaN**.
3. Return MinFromTime(LocalTime(*t*)).

© ISO/IEC 2002 – All rights reserved
Copyright International Organization for Standardization
Provided by IHS under license with ISO
No reproduction or networking permitted without license from IHS
Not for Resale

15.9.5.21 Date.prototype.getUTCMinutes ( )

1. Let *t* be this time value.
2. If *t* is **NaN**, return **NaN**.
3. Return MinFromTime(*t*).

15.9.5.22 Date.prototype.getSeconds ( )

1. Let *t* be this time value.
2. If *t* is **NaN**, return **NaN**.
3. Return SecFromTime(LocalTime(*t*)).

15.9.5.23 Date.prototype.getUTCSeconds ( )

1. Let *t* be this time value.
2. If *t* is **NaN**, return **NaN**.
3. Return SecFromTime(*t*).

15.9.5.24 Date.prototype.getMilliseconds ( )

1. Let *t* be this time value.
2. If *t* is **NaN**, return **NaN**.
3. Return msFromTime(LocalTime(*t*)).

15.9.5.25 Date.prototype.getUTCMilliseconds ( )

1. Let *t* be this time value.
2. If *t* is **NaN**, return **NaN**.
3. Return msFromTime(*t*).

15.9.5.26 Date.prototype.getTimezoneOffset ( )

Returns the difference between local time and UTC time in minutes.

1. Let *t* be this time value.
2. If *t* is **NaN**, return **NaN**.
3. Return (*t* − LocalTime(*t*)) / msPerMinute.

15.9.5.27 Date.prototype.setTime (time)

1. If the **this** value is not a Date object, throw a **TypeError** exception.
2. Call ToNumber(*time*).
3. Call TimeClip(Result(1)).
4. Set the [[Value]] property of the **this** value to Result(2).
5. Return the value of the [[Value]] property of the **this** value.

15.9.5.28 Date.prototype.setMilliseconds (ms)

1. Let *t* be the result of LocalTime(this time value).
2. Call ToNumber(*ms*).
3. Compute MakeTime(HourFromTime(*t*), MinFromTime(*t*), SecFromTime(*t*), Result(2)).
4. Compute UTC(MakeDate(Day(*t*), Result(3))).
5. Set the [[Value]] property of the **this** value to TimeClip(Result(4)).
6. Return the value of the [[Value]] property of the **this** value.

15.9.5.29 Date.prototype.setUTCMilliseconds (ms)

1. Let *t* be this time value.
2. Call ToNumber(*ms*).
3. Compute MakeTime(HourFromTime(*t*), MinFromTime(*t*), SecFromTime(*t*), Result(2)).
4. Compute MakeDate(Day(*t*), Result(3)).

© ISO/IEC 2002 – All rights reserved

Copyright International Organization for Standardization
Provided by IHS under license with ISO
No reproduction or networking permitted without license from IHS
Not for Resale

5. Set the [[Value]] property of the **this** value to TimeClip(Result(4)).
6. Return the value of the [[Value]] property of the **this** value.

15.9.5.30 Date.prototype.setSeconds (sec [, ms])

If *ms* is not specified, this behaves as if *ms* were specified with the value getMilliseconds( ).

1. Let *t* be the result of LocalTime(this time value).
2. Call ToNumber(*sec*).
3. If *ms* is not specified, compute msFromTime(*t*); otherwise, call ToNumber(*ms*).
4. Compute MakeTime(HourFromTime(*t*), MinFromTime(*t*), Result(2), Result(3)).
5. Compute UTC(MakeDate(Day(*t*), Result(4))).
6. Set the [[Value]] property of the **this** value to TimeClip(Result(5)).
7. Return the value of the [[Value]] property of the **this** value.

The **`length`** property of the **`setSeconds`** method is **2**.

15.9.5.31 Date.prototype.setUTCSeconds (sec [, ms])

If *ms* is not specified, this behaves as if *ms* were specified with the value getUTCMilliseconds( ).

1. Let *t* be this time value.
2. Call ToNumber(*sec*).
3. If *ms* is not specified, compute msFromTime(*t*); otherwise, call ToNumber(*ms*).
4. Compute MakeTime(HourFromTime(*t*), MinFromTime(*t*), Result(2), Result(3)).
5. Compute MakeDate(Day(*t*), Result(4)).
6. Set the [[Value]] property of the **this** value to TimeClip(Result(5)).
7. Return the value of the [[Value]] property of the **this** value.

The **`length`** property of the **`setUTCSeconds`** method is **2**.

15.9.5.32 Date.prototype.setMinutes (min [, sec [, ms]])

If *sec* is not specified, this behaves as if *sec* were specified with the value getSeconds( ).

If *ms* is not specified, this behaves as if *ms* were specified with the value getMilliseconds( ).

1. Let *t* be the result of LocalTime(this time value).
2. Call ToNumber(*min*).
3. If *sec* is not specified, compute SecFromTime(*t*); otherwise, call ToNumber(*sec*).
4. If *ms* is not specified, compute msFromTime(*t*); otherwise, call ToNumber(*ms*).
5. Compute MakeTime(HourFromTime(*t*), Result(2), Result(3), Result(4)).
6. Compute UTC(MakeDate(Day(*t*), Result(5))).
7. Set the [[Value]] property of the **this** value to TimeClip(Result(6)).
8. Return the value of the [[Value]] property of the **this** value.

The **`length`** property of the **`setMinutes`** method is **3**.

15.9.5.33 Date.prototype.setUTCMinutes (min [, sec [, ms]])

If *sec* is not specified, this behaves as if *sec* were specified with the value getUTCSeconds( ).

If *ms* is not specified, this behaves as if *ms* were specified with the value getUTCMilliseconds( ).

1. Let *t* be this time value.
2. Call ToNumber(*min*).
3. If *sec* is not specified, compute SecFromTime(*t*); otherwise, call ToNumber(*sec*).
4. If *ms* is not specified, compute msFromTime(*t*); otherwise, call ToNumber(*ms*).
5. Compute MakeTime(HourFromTime(*t*), Result(2), Result(3), Result(4)).
6. Compute MakeDate(Day(*t*), Result(5)).

© ISO/IEC 2002 – All rights reserved
Copyright International Organization for Standardization
Provided by IHS under license with ISO
No reproduction or networking permitted without license from IHS
Not for Resale

7. Set the [[Value]] property of the **this** value to TimeClip(Result(6)).
8. Return the value of the [[Value]] property of the **this** value.

The **`length`** property of the **`setUTCMinutes`** method is **3**.

15.9.5.34 Date.prototype.setHours (hour [, min [, sec [, ms]]])

If *min* is not specified, this behaves as if *min* were specified with the value getMinutes( ).

If *sec* is not specified, this behaves as if *sec* were specified with the value getSeconds( ).

If *ms* is not specified, this behaves as if *ms* were specified with the value getMilliseconds( ).

1. Let *t* be the result of LocalTime(this time value).
2. Call ToNumber(*hour*).
3. If *min* is not specified, compute MinFromTime(*t*); otherwise, call ToNumber(*min*).
4. If *sec* is not specified, compute SecFromTime(*t*); otherwise, call ToNumber(*sec*).
5. If *ms* is not specified, compute msFromTime(*t*); otherwise, call ToNumber(*ms*).
6. Compute MakeTime(Result(2), Result(3), Result(4), Result(5)).
7. Compute UTC(MakeDate(Day(*t*), Result(6))).
8. Set the [[Value]] property of the **this** value to TimeClip(Result(7)).
9. Return the value of the [[Value]] property of the **this** value.

The **`length`** property of the **`setHours`** method is **4**.

15.9.5.35 Date.prototype.setUTCHours (hour [, min [, sec [, ms]]])

If *min* is not specified, this behaves as if *min* were specified with the value getUTCMinutes( ).

If *sec* is not specified, this behaves as if *sec* were specified with the value getUTCSeconds( ).

If *ms* is not specified, this behaves as if *ms* were specified with the value getUTCMilliseconds( ).

1. Let *t* be this time value.
2. Call ToNumber(*hour*).
3. If *min* is not specified, compute MinFromTime(*t*); otherwise, call ToNumber(*min*).
4. If *sec* is not specified, compute SecFromTime(*t*); otherwise, call ToNumber(*sec*).
5. If *ms* is not specified, compute msFromTime(*t*); otherwise, call ToNumber(*ms*).
6. Compute MakeTime(Result(2), Result(3), Result(4), Result(5)).
7. Compute MakeDate(Day(*t*), Result(6)).
8. Set the [[Value]] property of the **this** value to TimeClip(Result(7)).
9. Return the value of the [[Value]] property of the **this** value.

The **`length`** property of the **`setUTCHours`** method is **4**.

15.9.5.36 Date.prototype.setDate (date)

1. Let *t* be the result of LocalTime(this time value).
2. Call ToNumber(*date*).
3. Compute MakeDay(YearFromTime(*t*), MonthFromTime(*t*), Result(2)).
4. Compute UTC(MakeDate(Result(3), TimeWithinDay(*t*))).
5. Set the [[Value]] property of the **this** value to TimeClip(Result(4)).
6. Return the value of the [[Value]] property of the **this** value.

15.9.5.37 Date.prototype.setUTCDate (date)

1. Let *t* be this time value.
2. Call ToNumber(*date*).
3. Compute MakeDay(YearFromTime(*t*), MonthFromTime(*t*), Result(2)).
4. Compute MakeDate(Result(3), TimeWithinDay(*t*)).

© ISO/IEC 2002 – All rights reserved

Copyright International Organization for Standardization
Provided by IHS under license with ISO
No reproduction or networking permitted without license from IHS
Not for Resale

5. Set the [[Value]] property of the **this** value to TimeClip(Result(4)).
6. Return the value of the [[Value]] property of the **this** value.

15.9.5.38 Date.prototype.setMonth (month [, date])

If *date* is not specified, this behaves as if *date* were specified with the value getDate( ).

1. Let *t* be the result of LocalTime(this time value).
2. Call ToNumber(*month*).
3. If *date* is not specified, compute DateFromTime(*t*); otherwise, call ToNumber(*date*).
4. Compute MakeDay(YearFromTime(*t*), Result(2), Result(3)).
5. Compute UTC(MakeDate(Result(4), TimeWithinDay(*t*))).
6. Set the [[Value]] property of the **this** value to TimeClip(Result(5)).
7. Return the value of the [[Value]] property of the **this** value.

The **`length`** property of the **`setMonth`** method is **2**.

15.9.5.39 Date.prototype.setUTCMonth (month [, date])

If *date* is not specified, this behaves as if *date* were specified with the value getUTCDate( ).

1. Let *t* be this time value.
2. Call ToNumber(*month*).
3. If *date* is not specified, compute DateFromTime(*t*); otherwise, call ToNumber(*date*).
4. Compute MakeDay(YearFromTime(*t*), Result(2), Result(3)).
5. Compute MakeDate(Result(4), TimeWithinDay(*t*)).
6. Set the [[Value]] property of the **this** value to TimeClip(Result(5)).
7. Return the value of the [[Value]] property of the **this** value.

The **`length`** property of the **`setUTCMonth`** method is **2**.

15.9.5.40 Date.prototype.setFullYear (year [, month [, date]])

If *month* is not specified, this behaves as if *month* were specified with the value getMonth( ).

If *date* is not specified, this behaves as if *date* were specified with the value getDate( ).

1. Let *t* be the result of LocalTime(this time value); but if this time value is **NaN**, let *t* be **+0**.
2. Call ToNumber(*year*).
3. If *month* is not specified, compute MonthFromTime(*t*); otherwise, call ToNumber(*month*).
4. If *date* is not specified, compute DateFromTime(*t*); otherwise, call ToNumber(*date*).
5. Compute MakeDay(Result(2), Result(3), Result(4)).
6. Compute UTC(MakeDate(Result(5), TimeWithinDay(*t*))).
7. Set the [[Value]] property of the **this** value to TimeClip(Result(6)).
8. Return the value of the [[Value]] property of the **this** value.

The **`length`** property of the **`setFullYear`** method is **3**.

15.9.5.41 Date.prototype.setUTCFullYear (year [, month [, date]])

If *month* is not specified, this behaves as if *month* were specified with the value getUTCMonth( ).

If *date* is not specified, this behaves as if *date* were specified with the value getUTCDate( ).

1. Let *t* be this time value; but if this time value is **NaN**, let *t* be **+0**.
2. Call ToNumber(*year*).
3. If *month* is not specified, compute MonthFromTime(*t*); otherwise, call ToNumber(*month*).
4. If *date* is not specified, compute DateFromTime(*t*); otherwise, call ToNumber(*date*).
5. Compute MakeDay(Result(2), Result(3), Result(4)).
6. Compute MakeDate(Result(5), TimeWithinDay(*t*)).

--`,,```,,,,````-`-`,,`,,`,`,,`---
© ISO/IEC 2002 – All rights reserved
Copyright International Organization for Standardization
Provided by IHS under license with ISO
No reproduction or networking permitted without license from IHS
Not for Resale

7. Set the [[Value]] property of the **this** value to TimeClip(Result(6)).
8. Return the value of the [[Value]] property of the **this** value.

The **`length`** property of the **`setUTCFullYear`** method is **3**.

15.9.5.42 Date.prototype.toUTCString ( )

This function returns a string value. The contents of the string are implementation-dependent, but are intended to represent the Date in a convenient, human-readable form in UTC.

15.9.6 Properties of Date Instances

Date instances have no special properties beyond those inherited from the Date prototype object.

15.10 RegExp (Regular Expression) Objects

A RegExp object contains a regular expression and the associated flags.

NOTE The form and functionality of regular expressions is modelled after the regular expression facility in the Perl 5 programming language.

15.10.1 Patterns

The **`RegExp`** constructor applies the following grammar to the input pattern string. An error occurs if the grammar cannot interpret the string as an expansion of *Pattern*.

Syntax

Pattern **::**
Disjunction

Disjunction **::**
Alternative
Alternative **|** *Disjunction*

Alternative **::**
[empty]
Alternative Term

Term **::**
Assertion
Atom
Atom Quantifier

Assertion **::**
^
$
\ b
\ B

Quantifier **::**
QuantifierPrefix
QuantifierPrefix **?**

QuantifierPrefix **::**
*****
+
?
{ *DecimalDigits* **}**
{ *DecimalDigits* **, }**
{ *DecimalDigits* **,** *DecimalDigits* **}**

--`,,```,,,,````-`-`,,`,,`,`,,`---

© ISO/IEC 2002 – All rights reserved

Copyright International Organization for Standardization
Provided by IHS under license with ISO
No reproduction or networking permitted without license from IHS
Not for Resale

Atom **::**
PatternCharacter
.
**** *AtomEscape*
CharacterClass
(*Disjunction* **)**
(? : *Disjunction* **)**
(? = *Disjunction* **)**
(? ! *Disjunction* **)**

PatternCharacter **::** *SourceCharacter* **but not any of:**
^ $ \ . * + ? ( ) [ ] { } |

AtomEscape **::**
DecimalEscape
CharacterEscape
CharacterClassEscape

CharacterEscape **::**
ControlEscape
c *ControlLetter*
HexEscapeSequence
UnicodeEscapeSequence
IdentityEscape

ControlEscape **:: one of**
f n r t v

ControlLetter **:: one of**
a b c d e f g h i j k l m n o p q r s t u v w x y z
A B C D E F G H I J K L M N O P Q R S T U V W X Y Z

IdentityEscape **::**
SourceCharacter **but not** *IdentifierPart*

DecimalEscape **::**
DecimalIntegerLiteral [lookahead ∉ *DecimalDigit*]

CharacterClassEscape **:: one of**
d D s S w W

CharacterClass **::**
[[lookahead ∉ {**^**}] *ClassRanges* **]**
[^ *ClassRanges* **]**

ClassRanges **::**
[empty]
NonemptyClassRanges

NonemptyClassRanges **::**
ClassAtom
ClassAtom NonemptyClassRangesNoDash
ClassAtom **-** *ClassAtom ClassRanges*

NonemptyClassRangesNoDash **::**
ClassAtom
ClassAtomNoDash NonemptyClassRangesNoDash
ClassAtomNoDash **-** *ClassAtom ClassRanges*

© ISO/IEC 2002 – All rights reserved
Copyright International Organization for Standardization
Provided by IHS under license with ISO
No reproduction or networking permitted without license from IHS
Not for Resale

ClassAtom **::**
-
ClassAtomNoDash

ClassAtomNoDash **::**
SourceCharacter **but not one of \ ] -**
**** *ClassEscape*

ClassEscape **::**
DecimalEscape
b
CharacterEscape
CharacterClassEscape

15.10.2 Pattern Semantics

A regular expression pattern is converted into an internal function using the process described below. An implementation is encouraged to use more efficient algorithms than the ones listed below, as long as the results are the same.

15.10.2.1 Notation

The descriptions below use the following variables:

- *Input* is the string being matched by the regular expression pattern. The notation *input*[*n*] means the *n*th character of *input*, where *n* can range between 0 (inclusive) and *InputLength* (exclusive).
- *InputLength* is the number of characters in the *Input* string.
- *NCapturingParens* is the total number of left capturing parentheses (i.e. the total number of times the *Atom* :: **(** *Disjunction* **)** production is expanded) in the pattern. A left capturing parenthesis is any **(** pattern character that is matched by the **(** terminal of the *Atom* :: **(** *Disjunction* **)** production.
- *IgnoreCase* is the setting of the RegExp object's **ignoreCase** property.
- *Multiline* is the setting of the RegExp object's **multiline** property.

Furthermore, the descriptions below use the following internal data structures:

- A *CharSet* is a mathematical set of characters.
- A *State* is an ordered pair (*endIndex*, *captures*) where *endIndex* is an integer and *captures* is an internal array of *NCapturingParens* values. States are used to represent partial match states in the regular expression matching algorithms. The *endIndex* is one plus the index of the last input character matched so far by the pattern, while *captures* holds the results of capturing parentheses. The *n*th element of *captures* is either a string that represents the value obtained by the *n*th set of capturing parentheses or **undefined** if the *n*th set of capturing parentheses hasn't been reached yet. Due to backtracking, many states may be in use at any time during the matching process.
- A *MatchResult* is either a State or the special token **failure** that indicates that the match failed.
- A *Continuation* function is an internal closure (i.e. an internal function with some arguments already bound to values) that takes one State argument and returns a MatchResult result. If an internal closure references variables bound in the function that creates the closure, the closure uses the values that these variables had at the time the closure was created. The continuation attempts to match the remaining portion (specified by the closure's already-bound arguments) of the pattern against the input string, starting at the intermediate state given by its State argument. If the match succeeds, the continuation returns the final State that it reached; if the match fails, the continuation returns **failure**.
- A *Matcher* function is an internal closure that takes two arguments -- a State and a Continuation -- and returns a MatchResult result. The matcher attempts to match a middle subpattern (specified by the closure's already-bound arguments) of the pattern against the input string, starting at the intermediate state given by its State argument. The Continuation argument should be a closure that matches the rest of the pattern. After matching the subpattern of a pattern to obtain a new State, the matcher then calls Continuation on that state to test if the rest of the pattern can match as well. If it can, the matcher returns the state returned by the continuation; if not,

--`,,```,,,,````-`-`,,`,,`,`,,`---

© ISO/IEC 2002 – All rights reserved

Copyright International Organization for Standardization
Provided by IHS under license with ISO
No reproduction or networking permitted without license from IHS
Not for Resale

the matcher may try different choices at its choice points, repeatedly calling Continuation until it either succeeds or all possibilities have been exhausted.

- An *AssertionTester* function is an internal closure that takes a State argument and returns a boolean result. The assertion tester tests a specific condition (specified by the closure's already-bound arguments) against the current place in the input string and returns **true** if the condition matched or **false** if not.
- An *EscapeValue* is either a character or an integer. An EscapeValue is used to denote the interpretation of a *DecimalEscape* escape sequence: a character *ch* means that the escape sequence is interpreted as the character *ch*, while an integer *n* means that the escape sequence is interpreted as a backreference to the *n*th set of capturing parentheses.

15.10.2.2 Pattern

The production *Pattern* **::** *Disjunction* evaluates as follows:

1. Evaluate *Disjunction* to obtain a Matcher *m*.
2. Return an internal closure that takes two arguments, a string *str* and an integer *index*, and performs the following:
    1. Let *Input* be the given string *str*. This variable will be used throughout the functions in section 15.10.2.
    2. Let *InputLength* be the length of *Input*. This variable will be used throughout the functions in section 15.10.2.
    3. Let *c* be a Continuation that always returns its State argument as a successful MatchResult.
    4. Let *cap* be an internal array of *NCapturingParens* **undefined** values, indexed 1 through *NCapturingParens*.
    5. Let *x* be the State (*index*, *cap*).
    6. Call *m*(*x*, *c*) and return its result.

Informative comments: A *Pattern* evaluates ("compiles") to an internal function value. **`RegExp.prototype.exec`** can then apply this function to a string and an offset within the string to determine whether the pattern would match starting at exactly that offset within the string, and, if it does match, what the values of the capturing parentheses would be. The algorithms in section 15.10.2 are designed so that compiling a pattern may throw a **SyntaxError** exception; on the other hand, once the pattern is successfully compiled, applying its result function to find a match in a string cannot throw an exception (except for any host-defined exceptions that can occur anywhere such as out-of-memory).

15.10.2.3 Disjunction

The production *Disjunction* **::** *Alternative* evaluates by evaluating *Alternative* to obtain a Matcher and returning that Matcher.

The production *Disjunction* **::** *Alternative* **|** *Disjunction* evaluates as follows:

1. Evaluate *Alternative* to obtain a Matcher *m1*.
2. Evaluate *Disjunction* to obtain a Matcher *m2*.
3. Return an internal Matcher closure that takes two arguments, a State *x* and a Continuation *c*, and performs the following:
    1. Call *m1*(*x*, *c*) and let *r* be its result.
    2. If *r* isn't **failure**, return *r*.
    3. Call *m2*(*x*, *c*) and return its result.

Informative comments: The **|** regular expression operator separates two alternatives. The pattern first tries to match the left *Alternative* (followed by the sequel of the regular expression); if it fails, it tries to match the right *Disjunction* (followed by the sequel of the regular expression). If the left *Alternative*, the right *Disjunction*, and the sequel all have choice points, all choices in the sequel are tried before moving on to the next choice in the left *Alternative*. If choices in the left *Alternative* are exhausted, the right *Disjunction* is tried instead of the left *Alternative*. Any capturing parentheses inside a portion of the pattern skipped by **|** produce **undefined** values instead of strings. Thus, for example,

```
/a|ab/.exec("abc")
```


--`,,```,,,,````-`-,,,,,,,,`---
© ISO/IEC 2002 – All rights reserved
Copyright International Organization for Standardization
Provided by IHS under license with ISO
No reproduction or networking permitted without license from IHS
Not for Resale

returns the result **"a"** and not **"ab"**. Moreover,

```
/((a)|(ab))((c)|(bc))/.exec("abc")
```

returns the array

```
["abc", "a", "a", undefined, "bc", undefined, "bc"]
```

and not

```
["abc", "ab", undefined, "ab", "c", "c", undefined]
```

15.10.2.4 Alternative

The production *Alternative* **::** [empty] evaluates by returning a Matcher that takes two arguments, a State *x* and a Continuation *c*, and returns the result of calling *c*(*x*).

The production *Alternative* **::** *Alternative Term* evaluates as follows:

1. Evaluate *Alternative* to obtain a Matcher *m1*.
2. Evaluate *Term* to obtain a Matcher *m2*.
3. Return an internal Matcher closure that takes two arguments, a State *x* and a Continuation *c*, and performs the following:
    1. Create a Continuation *d* that takes a State argument *y* and returns the result of calling *m2*(*y*, *c*).
    2. Call *m1*(*x*, *d*) and return its result.

Informative comments: Consecutive *Terms* try to simultaneously match consecutive portions of the input string. If the left *Alternative*, the right *Term*, and the sequel of the regular expression all have choice points, all choices in the sequel are tried before moving on to the next choice in the right *Term*, and all choices in the right *Term* are tried before moving on to the next choice in the left *Alternative*.

15.10.2.5 Term

The production *Term* **::** *Assertion* evaluates by returning an internal Matcher closure that takes two arguments, a State *x* and a Continuation *c*, and performs the following:

1. Evaluate *Assertion* to obtain an AssertionTester *t*.
2. Call *t*(*x*) and let *r* be the resulting boolean value.
3. If *r* is **false**, return **failure**.
4. Call *c*(*x*) and return its result.

The production *Term* **::** *Atom* evaluates by evaluating *Atom* to obtain a Matcher and returning that Matcher.

The production *Term* **::** *Atom Quantifier* evaluates as follows:

1. Evaluate *Atom* to obtain a Matcher *m*.
2. Evaluate *Quantifier* to obtain the three results: an integer *min*, an integer (or ∞) *max*, and boolean *greedy*.
3. If *max* is finite and less than *min*, then throw a **SyntaxError** exception.
4. Let *parenIndex* be the number of left capturing parentheses in the entire regular expression that occur to the left of this production expansion's *Term*. This is the total number of times the *Atom* :: **(** *Disjunction* **)** production is expanded prior to this production's *Term* plus the total number of *Atom* :: **(** *Disjunction* **)** productions enclosing this *Term*.
5. Let *parenCount* be the number of left capturing parentheses in the expansion of this production's *Atom*. This is the total number of *Atom* :: **(** *Disjunction* **)** productions enclosed by this production's *Atom*.
6. Return an internal Matcher closure that takes two arguments, a State *x* and a Continuation *c*, and performs the following:
    1. Call RepeatMatcher(*m*, *min*, *max*, *greedy*, *x*, *c*, *parenIndex*, *parenCount*) and return its result.

© ISO/IEC 2002 – All rights reserved

Copyright International Organization for Standardization
Provided by IHS under license with ISO
No reproduction or networking permitted without license from IHS
Not for Resale

The internal helper function *RepeatMatcher* takes eight parameters, a Matcher *m*, an integer *min*, an integer (or ∞) *max*, a boolean *greedy*, a State *x*, a Continuation *c*, an integer *parenIndex*, and an integer *parenCount*, and performs the following:

1. If *max* is zero, then call *c*(*x*) and return its result.
2. Create an internal Continuation closure *d* that takes one State argument *y* and performs the following:
    1. If *min* is zero and *y*'s *endIndex* is equal to *x*'s *endIndex*, then return **failure**.
    2. If *min* is zero then let *min2* be zero; otherwise let *min2* be *min*–1.
    3. If *max* is ∞, then let *max2* be ∞; otherwise let *max2* be *max*–1.
    4. Call RepeatMatcher(*m*, *min2*, *max2*, *greedy*, *y*, *c*, *parenIndex*, *parenCount*) and return its result.
3. Let *cap* be a fresh copy of *x*'s *captures* internal array.
4. For every integer *k* that satisfies *parenIndex* < *k* and *k* ≤ *parenIndex*+*parenCount*, set *cap*[*k*] to **undefined**.
5. Let *e* be *x*'s *endIndex*.
6. Let *xr* be the State (*e*, *cap*).
7. If *min* is not zero, then call *m*(*xr*, *d*) and return its result.
8. If *greedy* is **true**, then go to step 12.
9. Call *c*(*x*) and let *z* be its result.
10. If *z* is not **failure**, return *z*.
11. Call *m*(*xr*, *d*) and return its result.
12. Call *m*(*xr*, *d*) and let *z* be its result.
13. If *z* is not **failure**, return *z*.
14. Call *c*(*x*) and return its result.

Informative comments: An *Atom* followed by a *Quantifier* is repeated the number of times specified by the *Quantifier*. A quantifier can be non-greedy, in which case the *Atom* pattern is repeated as few times as possible while still matching the sequel, or it can be greedy, in which case the *Atom* pattern is repeated as many times as possible while still matching the sequel. The *Atom* pattern is repeated rather than the input string that it matches, so different repetitions of the Atom can match different input substrings.

If the *Atom* and the sequel of the regular expression all have choice points, the *Atom* is first matched as many (or as few, if non-greedy) times as possible. All choices in the sequel are tried before moving on to the next choice in the last repetition of *Atom*. All choices in the last (n^{th}) repetition of *Atom* are tried before moving on to the next choice in the next-to-last (n–1)st repetition of *Atom*; at which point it may turn out that more or fewer repetitions of *Atom* are now possible; these are exhausted (again, starting with either as few or as many as possible) before moving on to the next choice in the (n-1)st repetition of *Atom* and so on.

Compare

```
/a[a-z]{2,4}/.exec("abcdefghi")
```

which returns **"abcde"** with

```
/a[a-z]{2,4}?/.exec("abcdefghi")
```

which returns **"abc"**.

Consider also

```
/(aa|aabaac|ba|b|c)*/.exec("aabaac")
```

which, by the choice point ordering above, returns the array

```
["aaba", "ba"]
```

and not any of:

```
["aabaac", "aabaac"]
```

```
["aabaac", "c"]
```


© ISO/IEC 2002 – All rights reserved
Copyright International Organization for Standardization
Provided by IHS under license with ISO
No reproduction or networking permitted without license from IHS
Not for Resale

The above ordering of choice points can be used to write a regular expression that calculates the greatest common divisor of two numbers (represented in unary notation). The following example calculates the gcd of 10 and 15:

```
"aaaaaaaaaa,aaaaaaaaaaaaaa".replace(/^(a+)\1*,\1+$/,"$1")
```

which returns the gcd in unary notation **"aaaaa"**.

Step 4 of the *RepeatMatcher* clears *Atom*'s captures each time *Atom* is repeated. We can see its behaviour in the regular expression

```
/(z)((a+)?(b+)?(c))*/.exec("zaacbbbcac")
```

which returns the array

```
["zaacbbbcac", "z", "ac", "a", undefined, "c"]
```

and not

```
["zaacbbbcac", "z", "ac", "a", "bbb", "c"]
```

because each iteration of the outermost ***** clears all captured strings contained in the quantified *Atom*, which in this case includes capture strings numbered 2, 3, and 4.

Step 1 of the *RepeatMatcher*'s closure *d* states that, once the minimum number of repetitions has been satisfied, any more expansions of *Atom* that match the empty string are not considered for further repetitions. This prevents the regular expression engine from falling into an infinite loop on patterns such as:

```
/(a*)*/.exec("b")
```

or the slightly more complicated:

```
/(a*)b\1+/.exec("baaaac")
```

which returns the array

```
["b", ""]
```

15.10.2.6 Assertion

The production *Assertion* **::** **^** evaluates by returning an internal AssertionTester closure that takes a State argument *x* and performs the following:

1. Let *e* be *x*'s *endIndex*.
2. If *e* is zero, return **true**.
3. If *Multiline* is **false**, return **false**.
4. If the character *Input*[*e*–1] is one of the line terminator characters <LF>, <CR>, <LS>, or <PS>, return **true**.
5. Return **false**.

The production *Assertion* **::** **$** evaluates by returning an internal AssertionTester closure that takes a State argument *x* and performs the following:

1. Let *e* be *x*'s *endIndex*.
2. If *e* is equal to *InputLength*, return **true**.
3. If *multiline* is **false**, return **false**.
4. If the character *Input*[*e*] is one of the line terminator characters <LF>, <CR>, <LS>, or <PS>, return **true**.
5. Return **false**.

--`,,```,,,,````-`-`,,`,,`,`,,`---

© ISO/IEC 2002 – All rights reserved

Copyright International Organization for Standardization
Provided by IHS under license with ISO
No reproduction or networking permitted without license from IHS
Not for Resale

The production *Assertion* **::** **\ b** evaluates by returning an internal AssertionTester closure that takes a State argument *x* and performs the following:

1. Let *e* be *x*'s *endIndex*.
2. Call *IsWordChar*(*e*–1) and let *a* be the boolean result.
3. Call *IsWordChar*(*e*) and let *b* be the boolean result.
4. If *a* is **true** and *b* is **false**, return **true**.
5. If *a* is **false** and *b* is **true**, return **true**.
6. Return **false**.

The production *Assertion* **::** **\ B** evaluates by returning an internal AssertionTester closure that takes a State argument *x* and performs the following:

1. Let *e* be *x*'s *endIndex*.
2. Call *IsWordChar*(*e*–1) and let *a* be the boolean result.
3. Call *IsWordChar*(*e*) and let b be the boolean result.
4. If a is **true** and b is **false**, return **false**.
5. If a is **false** and b is **true**, return **false**.
6. Return **true**.

The internal helper function *IsWordChar* takes an integer parameter *e* and performs the following:

1. If *e* == –1 or *e* == *InputLength*, return **false**.
2. Let *c* be the character *Input*[*e*].
3. If *c* is one of the sixty-three characters in the table below, return **true**.

a	**b**	**c**	**d**	**e**	**f**	**g**	**h**	**i**	**j**	**k**	**l**	**m**	**n**	**o**	**p**	**q**	**r**	**s**	**t**	**u**	**v**	**w**	**x**	**y**	**z**
A	**B**	**C**	**D**	**E**	**F**	**G**	**H**	**I**	**J**	**K**	**L**	**M**	**N**	**O**	**P**	**Q**	**R**	**S**	**T**	**U**	**V**	**W**	**X**	**Y**	**Z**
0	**1**	**2**	**3**	**4**	**5**	**6**	**7**	**8**	**9**	**_**															

4. Return **false**.

15.10.2.7 Quantifier

The production *Quantifier* :: *QuantifierPrefix* evaluates as follows:

1. Evaluate *QuantifierPrefix* to obtain the two results: an integer *min* and an integer (or ∞) *max*.
2. Return the three results *min* , *max*, and **true**.

The production *Quantifier* **::** *QuantifierPrefix* **?** evaluates as follows:

1. Evaluate *QuantifierPrefix* to obtain the two results: an integer *min* and an integer (or ∞) *max*.
2. Return the three results *min* , *max*, and **false**.

The production *QuantifierPrefix* **::** ***** evaluates by returning the two results 0 and ∞.

The production *QuantifierPrefix* **::** **+** evaluates by returning the two results 1 and ∞.

The production *QuantifierPrefix* **::** **?** evaluates by returning the two results 0 and 1.

The production *QuantifierPrefix* **::** **{** *DecimalDigits* **}** evaluates as follows:

1. Let *i* be the MV of *DecimalDigits* (see section 7.8.3).
2. Return the two results *i* and *i*.

The production *QuantifierPrefix* **::** **{** *DecimalDigits* **,** **}** evaluates as follows:

1. Let *i* be the MV of *DecimalDigits*.
2. Return the two results *i* and ∞.

© ISO/IEC 2002 – All rights reserved
Copyright International Organization for Standardization
Provided by IHS under license with ISO
No reproduction or networking permitted without license from IHS
Not for Resale

The production *QuantifierPrefix* **::** **{** *DecimalDigits* **,** *DecimalDigits* **}** evaluates as follows:

1. Let *i* be the MV of the first *DecimalDigits*.
2. Let *j* be the MV of the second *DecimalDigits*.
3. Return the two results *i* and *j*.

15.10.2.8 Atom

The production *Atom* **::** *PatternCharacter* evaluates as follows:

1. Let *ch* be the character represented by *PatternCharacter*.
2. Let *A* be a one-element CharSet containing the character *ch*.
3. Call *CharacterSetMatcher*(*A*, **false**) and return its Matcher result.

The production *Atom* **::** **.** evaluates as follows:

1. Let *A* be the set of all characters except the four line terminator characters <LF>, <CR>, <LS>, or <PS>.
2. Call *CharacterSetMatcher*(*A*, **false**) and return its Matcher result.

The production *Atom* **::** **** *AtomEscape* evaluates by evaluating *AtomEscape* to obtain a Matcher and returning that Matcher.

The production *Atom* **::** *CharacterClass* evaluates as follows:

1. Evaluate *CharacterClass* to obtain a CharSet *A* and a boolean *invert*.
2. Call *CharacterSetMatcher*(*A*, *invert*) and return its Matcher result.

The production *Atom* **::** **(** *Disjunction* **)** evaluates as follows:

1. Evaluate *Disjunction* to obtain a Matcher *m*.
2. Let *parenIndex* be the number of left capturing parentheses in the entire regular expression that occur to the left of this production expansion's initial left parenthesis. This is the total number of times the *Atom* :: **(** *Disjunction* **)** production is expanded prior to this production's *Atom* plus the total number of *Atom* :: **(** *Disjunction* **)** productions enclosing this *Atom*.
3. Return an internal Matcher closure that takes two arguments, a State *x* and a Continuation *c*, and performs the following:
    1. Create an internal Continuation closure *d* that takes one State argument *y* and performs the following:
        1. Let *cap* be a fresh copy of *y*'s *captures* internal array.
        2. Let *xe* be *x*'s *endIndex*.
        3. Let *ye* be *y*'s *endIndex*.
        4. Let *s* be a fresh string whose characters are the characters of *Input* at positions *xe* (inclusive) through *ye* (exclusive).
        5. Set *cap*[*parenIndex*+1] to *s*.
        6. Let *z* be the State (*ye*, *cap*).
        7. Call *c*(*z*) and return its result.
    2. Call *m*(*x*, *d*) and return its result.

The production *Atom* **::** **(** **?** **:** *Disjunction* **)** evaluates by evaluating *Disjunction* to obtain a Matcher and returning that Matcher.

The production *Atom* **::** **(** **?** **=** *Disjunction* **)** evaluates as follows:

1. Evaluate *Disjunction* to obtain a Matcher *m*.
2. Return an internal Matcher closure that takes two arguments, a State *x* and a Continuation *c*, and performs the following:
    1. Let *d* be a Continuation that always returns its State argument as a successful MatchResult.
    2. Call *m*(*x*, *d*) and let *r* be its result.
    3. If *r* is **failure**, return **failure**.

--`,,```,,,,````-`-`,,`,,`,`,,`---

© ISO/IEC 2002 – All rights reserved

Copyright International Organization for Standardization
Provided by IHS under license with ISO
No reproduction or networking permitted without license from IHS
Not for Resale

4. Let *y* be *r*'s State.
5. Let *cap* be *y*'s *captures* internal array.
6. Let *xe* be *x*'s *endIndex*.
7. Let *z* be the State (*xe*, *cap*).
8. Call *c*(*z*) and return its result.

The production *Atom* **::** **(** **?** **!** *Disjunction* **)** evaluates as follows:

1. Evaluate *Disjunction* to obtain a Matcher *m*.
2. Return an internal Matcher closure that takes two arguments, a State *x* and a Continuation *c*, and performs the following:
    1. Let *d* be a Continuation that always returns its State argument as a successful MatchResult.
    2. Call *m*(*x*, *d*) and let *r* be its result.
    3. If *r* isn't **failure**, return **failure**.
    4. Call *c*(*x*) and return its result.

The internal helper function *CharacterSetMatcher* takes two arguments, a CharSet *A* and a boolean flag *invert*, and performs the following:

1. Return an internal Matcher closure that takes two arguments, a State *x* and a Continuation *c*, and performs the following:
    1. Let *e* be *x*'s *endIndex*.
    2. If *e* == *InputLength*, return **failure**.
    3. Let *c* be the character *Input*[*e*].
    4. Let *cc* be the result of *Canonicalize*(*c*).
    5. If *invert* is **true**, go to step 8.
    6. If there does not exist a member *a* of set *A* such that *Canonicalize*(*a*) == *cc*, then return **failure**.
    7. Go to step 9.
    8. If there exists a member *a* of set *A* such that *Canonicalize*(*a*) == *cc*, then return **failure**.
    9. Let *cap* be *x*'s *captures* internal array.
    10. Let *y* be the State (*e*+1, *cap*).
    11. Call *c*(*y*) and return its result.

The internal helper function *Canonicalize* takes a character parameter *ch* and performs the following:

1. If *IgnoreCase* is **false**, return *ch*.
2. Let *u* be *ch* converted to upper case as if by calling **`String.prototype.toUpperCase`** on the one-character string *ch*.
3. If *u* does not consist of a single character, return *ch*.
4. Let *cu* be *u*'s character.
5. If *ch*'s code point value is greater than or equal to decimal 128 and *cu*'s code point value is less than decimal 128, then return *ch*.
6. Return *cu*.

Informative comments: Parentheses of the form **(** *Disjunction* **)** serve both to group the components of the *Disjunction* pattern together and to save the result of the match. The result can be used either in a backreference (**** followed by a nonzero decimal number), referenced in a replace string, or returned as part of an array from the regular expression matching function. To inhibit the capturing behaviour of parentheses, use the form **(?:** *Disjunction* **)** instead.

The form **(?=** *Disjunction* **)** specifies a zero-width positive lookahead. In order for it to succeed, the pattern inside *Disjunction* must match at the current position, but the current position is not advanced before matching the sequel. If *Disjunction* can match at the current position in several ways, only the first one is tried. Unlike other regular expression operators, there is no backtracking into a **(?=** form (this unusual behaviour is inherited from Perl). This only matters when the *Disjunction* contains capturing parentheses and the sequel of the pattern contains backreferences to those captures.

--`,,```,,,,````-`-`,,`,,`,`,,`---

© ISO/IEC 2002 – All rights reserved
Copyright International Organization for Standardization
Provided by IHS under license with ISO
No reproduction or networking permitted without license from IHS
Not for Resale

For example,

```
/(?=(a+))/.exec("baaabac")
```

matches the empty string immediately after the first **b** and therefore returns the array:

```
["", "aaa"]
```

To illustrate the lack of backtracking into the lookahead, consider:

```
/(?=(a+))a*b\1/.exec("baaabac")
```

This expression returns

```
["aba", "a"]
```

and not:

```
["aaaba", "a"]
```

The form **(?!** *Disjunction* **)** specifies a zero-width negative lookahead. In order for it to succeed, the pattern inside *Disjunction* must fail to match at the current position. The current position is not advanced before matching the sequel. *Disjunction* can contain capturing parentheses, but backreferences to them only make sense from within *Disjunction* itself. Backreferences to these capturing parentheses from elsewhere in the pattern always return **undefined** because the negative lookahead must fail for the pattern to succeed. For example,

```
/(.*?)a(?!(a+)b\2c)\2(.*)/.exec("baaabaac")
```

looks for an **a** not immediately followed by some positive number *n* of **a**'s, a **b**, another *n* **a**'s (specified by the first **\2**) and a **c**. The second **\2** is outside the negative lookahead, so it matches against **undefined** and therefore always succeeds. The whole expression returns the array:

```
["baaabaac", "ba", undefined, "abaac"]
```

In case-insignificant matches all characters are implicitly converted to upper case immediately before they are compared. However, if converting a character to upper case would expand that character into more than one character (such as converting **"ß"** (\u00DF) into **"SS"**), then the character is left as-is instead. The character is also left as-is if it is not an ASCII character but converting it to upper case would make it into an ASCII character. This prevents Unicode characters such as \u0131 and \u017F from matching regular expressions such as **/[a-z]/i**, which are only intended to match ASCII letters. Furthermore, if these conversions were allowed, then **/[^\W]/i** would match each of **a**, **b**, …, **h**, but not **i** or **s**.

15.10.2.9 AtomEscape

The production *AtomEscape* **::** *DecimalEscape* evaluates as follows:

1. Evaluate *DecimalEscape* to obtain an EscapeValue *E*.
2. If *E* is not a character then go to step 6.
3. Let *ch* be *E*'s character.
4. Let *A* be a one-element CharSet containing the character *ch*.
5. Call *CharacterSetMatcher*(*A*, **false**) and return its Matcher result.
6. *E* must be an integer. Let *n* be that integer.
7. If *n*=0 or *n*>*NCapturingParens* then throw a **SyntaxError** exception.
8. Return an internal Matcher closure that takes two arguments, a State *x* and a Continuation *c*, and performs the following:
    1. Let *cap* be *x*'s *captures* internal array.
    2. Let *s* be *cap*[*n*].
    3. If *s* is **undefined**, then call *c*(*x*) and return its result.
    4. Let *e* be *x*'s *endIndex*.
    5. Let *len* be *s*'s length.

--`,,```,,,,````-`-`,,`,,`,`,,`---

© ISO/IEC 2002 – All rights reserved

Copyright International Organization for Standardization
Provided by IHS under license with ISO
No reproduction or networking permitted without license from IHS
Not for Resale

6. Let *f* be *e*+*len*.
7. If *f*>*InputLength*, return **failure**.
8. If there exists an integer *i* between 0 (inclusive) and *len* (exclusive) such that *Canonicalize*(*s*[*i*]) is not the same character as *Canonicalize*(*Input* [*e*+*i*]), then return **failure**.
9. Let *y* be the State (*f*, *cap*).
10. Call *c*(*y*) and return its result.

The production *AtomEscape* **::** *CharacterEscape* evaluates as follows:

1. Evaluate *CharacterEscape* to obtain a character *ch*.
2. Let *A* be a one-element CharSet containing the character *ch*.
3. Call *CharacterSetMatcher*(*A*, **false**) and return its Matcher result.

The production *AtomEscape* **::** *CharacterClassEscape* evaluates as follows:

1. Evaluate *CharacterClassEscape* to obtain a CharSet *A*.
2. Call *CharacterSetMatcher*(*A*, **false**) and return its Matcher result.

Informative comments: An escape sequence of the form **** followed by a nonzero decimal number *n* matches the result of the *n*th set of capturing parentheses (see section 15.10.2.11). It is an error if the regular expression has fewer than *n* capturing parentheses. If the regular expression has *n* or more capturing parentheses but the *n*th one is **undefined** because it hasn't captured anything, then the backreference always succeeds.

15.10.2.10 CharacterEscape

The production *CharacterEscape* **::** *ControlEscape* evaluates by returning the character according to the table below:

ControlEscape	*Unicode Value*	*Name*	*Symbol*
t	**\u0009**	horizontal tab	<HT>
n	**\u000A**	line feed (new line)	<LF>
v	**\u000B**	vertical tab	<VT>
f	**\u000C**	form feed	<FF>
r	**\u000D**	carriage return	<CR>

The production *CharacterEscape* **::** **c** *ControlLetter* evaluates as follows:

1. Let *ch* be the character represented by *ControlLetter*.
2. Let *i* be *ch*'s code point value.
3. Let *j* be the remainder of dividing *i* by 32.
4. Return the Unicode character numbered *j*.

The production *CharacterEscape* **::** *HexEscapeSequence* evaluates by evaluating the CV of the *HexEscapeSequence* (see section 7.8.4) and returning its character result.

The production *CharacterEscape* **::** *UnicodeEscapeSequence* evaluates by evaluating the CV of the *UnicodeEscapeSequence* (see section 7.8.4) and returning its character result.

The production *CharacterEscape* **::** *IdentityEscape* evaluates by returning the character represented by *IdentityEscape*.

15.10.2.11 DecimalEscape

The production *DecimalEscape* **::** *DecimalIntegerLiteral* [lookahead ∉ *DecimalDigit*] evaluates as follows.

1. Let *i* be the MV of *DecimalIntegerLiteral*.
2. If *i* is zero, return the EscapeValue consisting of a <NUL> character (Unicode value 0000).
3. Return the EscapeValue consisting of the integer *i*.

The definition of “the MV of *DecimalIntegerLiteral*” is in section 7.8.3.

--`,,```,,,,````-`-`,,`,,`,`,,`---
Copyright International Organization for Standardization
Provided by IHS under license with ISO
No reproduction or networking permitted without license from IHS
© ISO/IEC 2002 – All rights reserved
Not for Resale

Informative comments: If **** is followed by a decimal number *n* whose first digit is not **0**, then the escape sequence is considered to be a backreference. It is an error if *n* is greater than the total number of left capturing parentheses in the entire regular expression. **\0** represents the NUL character and cannot be followed by a decimal digit.

15.10.2.12 CharacterClassEscape

The production *CharacterClassEscape* **::** **d** evaluates by returning the ten-element set of characters containing the characters **0** through **9** inclusive.

The production *CharacterClassEscape* **::** **D** evaluates by returning the set of all characters not included in the set returned by *CharacterClassEscape* **::** **d**.

The production *CharacterClassEscape* **::** **s** evaluates by returning the set of characters containing the characters that are on the right-hand side of the *WhiteSpace* (section 7.2) or *LineTerminator* (section 7.3) productions.

The production *CharacterClassEscape* **::** **S** evaluates by returning the set of all characters not included in the set returned by *CharacterClassEscape* **::** **s**.

The production *CharacterClassEscape* **::** **w** evaluates by returning the set of characters containing the sixty-three characters:

a b c d e f g h i j k l m n o p q r s t u v w x y z

A B C D E F G H I J K L M N O P Q R S T U V W X Y Z

0 1 2 3 4 5 6 7 8 9 _

The production *CharacterClassEscape* **::** **W** evaluates by returning the set of all characters not included in the set returned by *CharacterClassEscape* **::** **w**.

15.10.2.13 CharacterClass

The production *CharacterClass* **::** **[** [lookahead ∉ {^}] *ClassRanges* **]** evaluates by evaluating *ClassRanges* to obtain a CharSet and returning that CharSet and the boolean **false**.

The production *CharacterClass* **::** **[** **^** *ClassRanges* **]** evaluates by evaluating *ClassRanges* to obtain a CharSet and returning that CharSet and the boolean **true**.

15.10.2.14 ClassRanges

The production *ClassRanges* **::** [empty] evaluates by returning the empty CharSet.

The production *ClassRanges* **::** *NonemptyClassRanges* evaluates by evaluating *NonemptyClassRanges* to obtain a CharSet and returning that CharSet.

15.10.2.15 NonemptyClassRanges

The production *NonemptyClassRanges* **::** *ClassAtom* evaluates by evaluating *ClassAtom* to obtain a CharSet and returning that CharSet.

The production *NonemptyClassRanges* **::** *ClassAtom NonemptyClassRangesNoDash* evaluates as follows:

1. Evaluate *ClassAtom* to obtain a CharSet *A*.
2. Evaluate *NonemptyClassRangesNoDash* to obtain a CharSet *B*.
3. Return the union of CharSets *A* and *B*.

The production *NonemptyClassRanges* **::** *ClassAtom* **-** *ClassAtom ClassRanges* evaluates as follows:

1. Evaluate the first *ClassAtom* to obtain a CharSet *A*.
2. Evaluate the second *ClassAtom* to obtain a CharSet *B*.

© ISO/IEC 2002 – All rights reserved

Copyright International Organization for Standardization
Provided by IHS under license with ISO
No reproduction or networking permitted without license from IHS
Not for Resale

3. Evaluate *ClassRanges* to obtain a CharSet *C*.
4. Call *CharacterRange*(*A*, *B*) and let *D* be the resulting CharSet.
5. Return the union of CharSets *D* and *C*.

The internal helper function *CharacterRange* takes two CharSet parameters *A* and *B* and performs the following:

1. If *A* does not contain exactly one character or *B* does not contain exactly one character then throw a **SyntaxError** exception.
2. Let *a* be the one character in CharSet *A*.
3. Let *b* be the one character in CharSet *B*.
4. Let *i* be the code point value of character *a*.
5. Let *j* be the code point value of character *b*.
6. If *I* > *j* then throw a **SyntaxError** exception.
7. Return the set containing all characters numbered *i* through *j*, inclusive.

15.10.2.16 NonemptyClassRangesNoDash

The production *NonemptyClassRangesNoDash* **::** *ClassAtom* evaluates by evaluating *ClassAtom* to obtain a CharSet and returning that CharSet.

The production *NonemptyClassRangesNoDash* **::** *ClassAtomNoDash NonemptyClassRangesNoDash* evaluates as follows:

1. Evaluate *ClassAtomNoDash* to obtain a CharSet *A*.
2. Evaluate *NonemptyClassRangesNoDash* to obtain a CharSet *B*.
3. Return the union of CharSets *A* and *B*.

The production *NonemptyClassRangesNoDash* **::** *ClassAtomNoDash* **-** *ClassAtom ClassRanges* evaluates as follows:

1. Evaluate *ClassAtomNoDash* to obtain a CharSet *A*.
2. Evaluate *ClassAtom* to obtain a CharSet *B*.
3. Evaluate *ClassRanges* to obtain a CharSet *C*.
4. Call *CharacterRange*(*A*, *B*) and let *D* be the resulting CharSet.
5. Return the union of CharSets *D* and *C*.

Informative comments: *ClassRanges* can expand into single *ClassAtoms* and/or ranges of two *ClassAtoms* separated by dashes. In the latter case the *ClassRanges* includes all characters between the first *ClassAtom* and the second *ClassAtom*, inclusive; an error occurs if either *ClassAtom* does not represent a single character (for example, if one is **`\w`**) or if the first *ClassAtom's* code point value is greater than the second *ClassAtom's* code point value.

Even if the pattern ignores case, the case of the two ends of a range is significant in determining which characters belong to the range. Thus, for example, the pattern **`/[E-F]/i`** matches only the letters **`E`**, **`F`**, **`e`**, and **`f`**, while the pattern **`/[E-f]/i`** matches all upper and lower-case ASCII letters as well as the symbols **`[`**, **`\`**, **`]`**, **`^`**, **`_`**, and **`` ` ``**.

A **-** character can be treated literally or it can denote a range. It is treated literally if it is the first or last character of *ClassRanges*, the beginning or end limit of a range specification, or immediately follows a range specification.

15.10.2.17 ClassAtom

The production *ClassAtom* **::** **-** evaluates by returning the CharSet containing the one character **-**.

The production *ClassAtom* **::** *ClassAtomNoDash* evaluates by evaluating *ClassAtomNoDash* to obtain a CharSet and returning that CharSet.

15.10.2.18 ClassAtomNoDash

The production *ClassAtomNoDash* **::** *SourceCharacter* **but not one of `\ ] -`** evaluates by returning a one-element CharSet containing the character represented by *SourceCharacter*.

© ISO/IEC 2002 – All rights reserved
Copyright International Organization for Standardization
Provided by IHS under license with ISO
No reproduction or networking permitted without license from IHS
Not for Resale

The production *ClassAtomNoDash* **::** **** *ClassEscape* evaluates by evaluating *ClassEscape* to obtain a CharSet and returning that CharSet.

15.10.2.19 ClassEscape

The production *ClassEscape* **::** *DecimalEscape* evaluates as follows:

1. Evaluate *DecimalEscape* to obtain an EscapeValue *E*.
2. If *E* is not a character then throw a **SyntaxError** exception.
3. Let *ch* be *E*'s character.
4. Return the one-element CharSet containing the character *ch*.

The production *ClassEscape* **::** **b** evaluates by returning the CharSet containing the one character <BS> (Unicode value 0008).

The production *ClassEscape* **::** *CharacterEscape* evaluates by evaluating *CharacterEscape* to obtain a character and returning a one-element CharSet containing that character.

The production *ClassEscape* **::** *CharacterClassEscape* evaluates by evaluating *CharacterClassEscape* to obtain a CharSet and returning that CharSet.

Informative comments: A *ClassAtom* can use any of the escape sequences that are allowed in the rest of the regular expression except for **\b**, **\B**, and backreferences. Inside a *CharacterClass*, **\b** means the backspace character, while **\B** and backreferences raise errors. Using a backreference inside a ClassAtom causes an error.

15.10.3 The RegExp Constructor Called as a Function

15.10.3.1 RegExp(pattern, flags)

If *pattern* is an object *R* whose [[Class]] property is **"RegExp"** and *flags* is **undefined**, then return *R* unchanged. Otherwise call the RegExp constructor (section 15.10.4.1), passing it the *pattern* and *flags* arguments and return the object constructed by that constructor.

15.10.4 The RegExp Constructor

When **RegExp** is called as part of a **new** expression, it is a constructor: it initialises the newly created object.

15.10.4.1 new RegExp(pattern, flags)

If *pattern* is an object *R* whose [[Class]] property is **"RegExp"** and *flags* is **undefined**, then let *P* be the *pattern* used to construct *R* and let *F* be the flags used to construct *R*. If *pattern* is an object *R* whose [[Class]] property is **"RegExp"** and *flags* is not **undefined**, then throw a **TypeError** exception. Otherwise, let *P* be the empty string if *pattern* is **undefined** and ToString(*pattern*) otherwise, and let *F* be the empty string if *flags* is **undefined** and ToString(*flags*) otherwise.

The **global** property of the newly constructed object is set to a Boolean value that is **true** if *F* contains the character **"g"** and **false** otherwise.

The **ignoreCase** property of the newly constructed object is set to a Boolean value that is **true** if *F* contains the character **"i"** and **false** otherwise.

The **multiline** property of the newly constructed object is set to a Boolean value that is **true** if *F* contains the character **"m"** and **false** otherwise.

If *F* contains any character other than **"g"**, **"i"**, or **"m"**, or if it contains the same one more than once, then throw a **SyntaxError** exception.

If *P*'s characters do not have the form *Pattern,* then throw a **SyntaxError** exception. Otherwise let the newly constructed object have a [[Match]] property obtained by evaluating ("compiling") *Pattern*. Note that evaluating

© ISO/IEC 2002 – All rights reserved

Copyright International Organization for Standardization
Provided by IHS under license with ISO
No reproduction or networking permitted without license from IHS
Not for Resale

Pattern may throw a **SyntaxError** exception. (Note: if *pattern* is a *StringLiteral*, the usual escape sequence substitutions are performed before the string is processed by **`RegExp`**. If *pattern* must contain an escape sequence to be recognised by **`RegExp`**, the "**`\`**" character must be escaped within the *StringLiteral* to prevent its being removed when the contents of the *StringLiteral* are formed.)

The **`source`** property of the newly constructed object is set to an implementation-defined string value in the form of a *Pattern* based on *P*.

The **`lastIndex`** property of the newly constructed object is set to **0**.

The [[Prototype]] property of the newly constructed object is set to the original RegExp prototype object, the one that is the initial value of **`RegExp.prototype`**.

The [[Class]] property of the newly constructed object is set to **`"RegExp"`**.

15.10.5 Properties of the RegExp Constructor

The value of the internal [[Prototype]] property of the RegExp constructor is the Function prototype object (section 15.3.4).

Besides the internal properties and the **`length`** property (whose value is **2**), the RegExp constructor has the following properties:

15.10.5.1 RegExp.prototype

The initial value of **`RegExp.prototype`** is the RegExp prototype object (section 15.10.6).

This property shall have the attributes { DontEnum, DontDelete, ReadOnly }.

15.10.6 Properties of the RegExp Prototype Object

The value of the internal [[Prototype]] property of the RegExp prototype object is the Object prototype. The value of the internal [[Class]] property of the RegExp prototype object is **`"Object"`**.

The RegExp prototype object does not have a **`valueOf`** property of its own; however, it inherits the **`valueOf`** property from the Object prototype object.

In the following descriptions of functions that are properties of the RegExp prototype object, the phrase "this RegExp object" refers to the object that is the **this** value for the invocation of the function; a **TypeError** exception is thrown if the **this** value is not an object for which the value of the internal [[Class]] property is **`"RegExp"`**.

15.10.6.1 RegExp.prototype.constructor

The initial value of **`RegExp.prototype.constructor`** is the built-in **`RegExp`** constructor.

15.10.6.2 RegExp.prototype.exec(string)

Performs a regular expression match of *string* against the regular expression and returns an Array object containing the results of the match, or **null** if the string did not match

The string ToString(*string*) is searched for an occurrence of the regular expression pattern as follows:

1. Let *S* be the value of ToString(*string*).
2. Let *length* be the length of *S*.
3. Let *lastIndex* be the value of the **`lastIndex`** property.
4. Let *i* be the value of ToInteger(*lastIndex*).
5. If the **`global`** property is **false**, let *i* = 0.
6. If *I* < 0 or *I* > *length* then set **`lastIndex`** to 0 and return **`null`**.
7. Call [[Match]], giving it the arguments *S* and *i*. If [[Match]] returned **failure**, go to step 8; otherwise let *r* be its State result and go to step 10.

© ISO/IEC 2002 – All rights reserved
Copyright International Organization for Standardization
Provided by IHS under license with ISO
No reproduction or networking permitted without license from IHS
Not for Resale

8. Let *i* = *i*+1.
9. Go to step 6.
10. Let *e* be *r*'s *endIndex* value.
11. If the **`global`** property is **true**, set **`lastIndex`** to *e*.
12. Let *n* be the length of *r*'s *captures* array. (This is the same value as section 15.10.2.1's *NCapturingParens*.)
13. Return a new array with the following properties:
    - The **`index`** property is set to the position of the matched substring within the complete string *S*.
    - The **`input`** property is set to *S*.
    - The **`length`** property is set to *n* + 1.
    - The **`0`** property is set to the matched substring (i.e. the portion of *S* between offset *i* inclusive and offset *e* exclusive).
    - For each integer *i* such that *I* > 0 and *I* ≤ *n*, set the property named ToString(*i*) to the ith element of *r*'s *captures* array.

15.10.6.3 RegExp.prototype.test(string)

Equivalent to the expression **`RegExp.prototype.exec(string) != null.`**

15.10.6.4 RegExp.prototype.toString()

Let *src* be a string in the form of a *Pattern* representing the current regular expression. *src* may or may not be identical to the **`source`** property or to the source code supplied to the RegExp constructor; however, if *src* were supplied to the RegExp constructor along with the current regular expression's flags, the resulting regular expression must behave identically to the current regular expression.

`toString` returns a string value formed by concatenating the strings **`"/"`**, *src*, and **`"/"`**; plus **`"g"`** if the **`global`** property is **true**, **`"i"`** if the **`ignoreCase`** property is **true**, and **`"m"`** if the **`multiline`** property is **true.**

NOTE An implementation may choose to take advantage of *src* being allowed to be different from the source passed to the RegExp constructor to escape special characters in *src*. For example, in the regular expression obtained from **`new RegExp("/")`**, *src* could be, among other possibilities, **`"/"`** or **`"\/"`**. The latter would permit the entire result (**`"/\//"`**) of the **`toString`** call to have the form *RegularExpressionLiteral*.

15.10.7 Properties of RegExp Instances

RegExp instances inherit properties from their [[Prototype]] object as specified above and also have the following properties.

15.10.7.1 source

The value of the **`source`** property is string in the form of a *Pattern* representing the current regular expression. This property shall have the attributes { DontDelete, ReadOnly, DontEnum }.

15.10.7.2 global

The value of the **`global`** property is a Boolean value indicating whether the flags contained the character **`"g"`**. This property shall have the attributes { DontDelete, ReadOnly, DontEnum }.

15.10.7.3 ignoreCase

The value of the **`ignoreCase`** property is a Boolean value indicating whether the flags contained the character **`"i"`**. This property shall have the attributes { DontDelete, ReadOnly, DontEnum }.

15.10.7.4 multiline

The value of the **`multiline`** property is a Boolean value indicating whether the flags contained the character **`"m"`**. This property shall have the attributes { DontDelete, ReadOnly, DontEnum }.

© ISO/IEC 2002 – All rights reserved

Copyright International Organization for Standardization
Provided by IHS under license with ISO
No reproduction or networking permitted without license from IHS
Not for Resale

15.10.7.5 lastIndex

The value of the **`lastIndex`** property is an integer that specifies the string position at which to start the next match. This property shall have the attributes { DontDelete, DontEnum }.

15.11 Error Objects

Instances of Error objects are thrown as exceptions when runtime errors occur. The Error objects may also serve as base objects for user-defined exception classes.

15.11.1 The Error Constructor Called as a Function

When **`Error`** is called as a function rather than as a constructor, it creates and initialises a new Error object. Thus the function call **`Error(…)`** is equivalent to the object creation expression **`new Error(…)`** with the same arguments.

15.11.1.1 Error (message)

The [[Prototype]] property of the newly constructed object is set to the original Error prototype object, the one that is the initial value of **`Error.prototype`** (section 15.11.3.1).

The [[Class]] property of the newly constructed object is set to **`"Error"`**.

If the argument *message* is not **undefined**, the **`message`** property of the newly constructed object is set to ToString(*message*).

15.11.2 The Error Constructor

When **`Error`** is called as part of a **`new`** expression, it is a constructor: it initialises the newly created object.

15.11.2.1 new Error (message)

The [[Prototype]] property of the newly constructed object is set to the original Error prototype object, the one that is the initial value of **`Error.prototype`** (section 15.11.3.1).

The [[Class]] property of the newly constructed Error object is set to **`"Error"`**.

If the argument *message* is not **undefined**, the **`message`** property of the newly constructed object is set to ToString(*message*).

15.11.3 Properties of the Error Constructor

The value of the internal [[Prototype]] property of the Error constructor is the Function prototype object (section 15.3.4).

Besides the internal properties and the **`length`** property (whose value is **1**), the Error constructor has the following property:

15.11.3.1 Error.prototype

The initial value of **`Error.prototype`** is the Error prototype object (section 15.11.4).

This property has the attributes { DontEnum, DontDelete, ReadOnly }.

15.11.4 Properties of the Error Prototype Object

The Error prototype object is itself an Error object (its [[Class]] is **`"Error"`**).

The value of the internal [[Prototype]] property of the Error prototype object is the Object prototype object (section 15.2.3.1).

© ISO/IEC 2002 – All rights reserved
Copyright International Organization for Standardization
Provided by IHS under license with ISO
No reproduction or networking permitted without license from IHS
Not for Resale

15.11.4.1 Error.prototype.constructor

The initial value of **`Error.prototype.constructor`** is the built-in **`Error`** constructor.

15.11.4.2 Error.prototype.name

The initial value of **`Error.prototype.name`** is **`"Error"`**.

15.11.4.3 Error.prototype.message

The initial value of **`Error.prototype.message`** is an implementation-defined string.

15.11.4.4 Error.prototype.toString ( )

Returns an implementation defined string.

15.11.5 Properties of Error Instances

Error instances have no special properties beyond those inherited from the Error prototype object.

15.11.6 Native Error Types Used in This Standard

One of the *NativeError* objects below is thrown when a runtime error is detected. All of these objects share the same structure, as described in section 15.11.7.

15.11.6.1 EvalError

Indicates that the global function **`eval`** was used in a way that is incompatible with its definition. See section 15.1.2.1.

15.11.6.2 RangeError

Indicates a numeric value has exceeded the allowable range. See sections 15.4.2.2, 15.4.5.1, 15.7.4.5, 15.7.4.6, and 15.7.4.7.

15.11.6.3 ReferenceError

Indicate that an invalid reference value has been detected. See sections 8.7.1, and 8.7.2.

15.11.6.4 SyntaxError

Indicates that a parsing error has occurred. See sections 15.1.2.1, 15.3.2.1, 15.10.2.5, 15.10.2.9, 15.10.2.15, 15.10.2.19, and 15.10.4.1.

15.11.6.5 TypeError

Indicates the actual type of an operand is different than the expected type. See sections 8.6.2, 8.6.2.6, 9.9, 11.2.2, 11.2.3, 11.8.6, 11.8.7, 15.3.4.2, 15.3.4.3, 15.3.4.4, 15.3.5.3, 15.4.4.2, 15.4.4.3, 15.5.4.2, 15.5.4.3, 15.6.4, 15.6.4.2, 15.6.4.3, 15.7.4, 15.7.4.2, 15.7.4.4, 15.9.5, 15.9.5.9, 15.9.5.27, 15.10.4.1, and 15.10.6.

15.11.6.6 URIError

Indicates that one of the global URI handling functions was used in a way that is incompatible with its definition. See section 15.1.3.

15.11.7 *NativeError* Object Structure

When an ECMAScript implementation detects a runtime error, it throws an instance of one of the *NativeError* objects defined in section 15.11.6. Each of these objects has the structure described below, differing only in the name used as the constructor name instead of *NativeError*, in the **name** property of the prototype object, and in the implementation-defined **`message`** property of the prototype object.

© ISO/IEC 2002 – All rights reserved

Copyright International Organization for Standardization
Provided by IHS under license with ISO
No reproduction or networking permitted without license from IHS
Not for Resale

For each error object, references to *NativeError* in the definition should be replaced with the appropriate error object name from section 15.11.6.

15.11.7.1 *NativeError* Constructors Called as Functions

When a *NativeError* constructor is called as a function rather than as a constructor, it creates and initialises a new object. A call of the object as a function is equivalent to calling it as a constructor with the same arguments.

15.11.7.2 *NativeError* (message)

The [[Prototype]] property of the newly constructed object is set to the prototype object for this error constructor. The [[Class]] property of the newly constructed object is set to **`"Error"`**.

If the argument *message* is not **undefined**, the **`message`** property of the newly constructed object is set to ToString(*message*).

15.11.7.3 The *NativeError* Constructors

When a *NativeError* constructor is called as part of a **`new`** expression, it is a constructor: it initialises the newly created object.

15.11.7.4 New *NativeError* (message)

The [[Prototype]] property of the newly constructed object is set to the prototype object for this *NativeError* constructor. The [[Class]] property of the newly constructed object is set to **`"Error"`**.

If the argument *message* is not **undefined**, the **`message`** property of the newly constructed object is set to ToString(*message*).

15.11.7.5 Properties of the *NativeError* Constructors

The value of the internal [[Prototype]] property of a *NativeError* constructor is the Function prototype object (section 15.3.4).

Besides the internal properties and the **`length`** property (whose value is **1**), each *NativeError* constructor has the following property:

15.11.7.6 *NativeError*.prototype

The initial value of ***NativeError*`.prototype`** is a *NativeError* prototype object (section 15.11.7.7). Each *NativeError* constructor has a separate prototype object.

This property has the attributes { DontEnum, DontDelete, ReadOnly }.

15.11.7.7 Properties of the *NativeError* Prototype Objects

Each *NativeError* prototype object is an Error object (its [[Class]] is **`"Error"`**).

The value of the internal [[Prototype]] property of each *NativeError* prototype object is the Error prototype object (section 15.11.4).

15.11.7.8 *NativeError*.prototype.constructor

The initial value of the **`constructor`** property of the prototype for a given *NativeError* constructor is the *NativeError* constructor function itself (section 15.11.7).

15.11.7.9 *NativeError*.prototype.name

The initial value of the **`name`** property of the prototype for a given *NativeError* constructor is the name of the constructor (the name used instead of *NativeError*).

© ISO/IEC 2002 – All rights reserved
Copyright International Organization for Standardization
Provided by IHS under license with ISO
No reproduction or networking permitted without license from IHS
Not for Resale

15.11.7.10 *NativeError*.prototype.message

The initial value of the **message** property of the prototype for a given *NativeError* constructor is an implementation-defined string.

NOTE The prototypes for the *NativeError* constructors do not themselves provide a **toString** function, but instances of errors will inherit it from the Error prototype object.

15.11.7.11 Properties of *NativeError* Instances

NativeError instances have no special properties beyond those inherited from the Error prototype object.

16 Errors

An implementation should report runtime errors at the time the relevant language construct is evaluated. An implementation may report syntax errors in the program at the time the program is read in, or it may, at its option, defer reporting syntax errors until the relevant statement is reached. An implementation may report syntax errors in **eval** code at the time **eval** is called, or it may, at its option, defer reporting syntax errors until the relevant statement is reached.

An implementation may treat any instance of the following kinds of runtime errors as a syntax error and therefore report it early:

- Improper uses of **return**, **break**, and **continue**.
- Using the **eval** property other than via a direct call.
- Errors in regular expression literals.
- Attempts to call PutValue on a value that is not a reference (for example, executing the assignment statement `3=4`).

An implementation shall not report other kinds of runtime errors early even if the compiler can prove that a construct cannot execute without error under any circumstances. An implementation may issue an early warning in such a case, but it should not report the error until the relevant construct is actually executed.

An implementation shall report all errors as specified, except for the following:

- An implementation may extend program and regular expression syntax. To permit this, all operations (such as calling **eval**, using a regular expression literal, or using the **Function** or **RegExp** constructor) that are allowed to throw **SyntaxError** are permitted to exhibit implementation-defined behaviour instead of throwing **SyntaxError** when they encounter an implementation-defined extension to the program or regular expression syntax.
- An implementation may provide additional types, values, objects, properties, and functions beyond those described in this specification. This may cause constructs (such as looking up a variable in the global scope) to have implementation-defined behaviour instead of throwing an error (such as **ReferenceError**).
- An implementation is not required to detect **EvalError**. If it chooses not to detect **EvalError**, the implementation must allow **eval** to be used indirectly and/or allow assignments to **eval**.
- An implementation may define behaviour other than throwing **RangeError** for **toFixed**, **toExponential**, and **toPrecision** when the *fractionDigits* or *precision* argument is outside the specified range.

--`,,```,,,,````-`-`,,`,,`,`,,`---

© ISO/IEC 2002 – All rights reserved

Copyright International Organization for Standardization
Provided by IHS under license with ISO
No reproduction or networking permitted without license from IHS
Not for Resale

Annex A
(informative)

Grammar Summary

A.1 Lexical Grammar

SourceCharacter **::** — See section 6
any Unicode character

InputElementDiv **::** — See section 7
WhiteSpace
LineTerminator
Comment
Token
DivPunctuator

InputElementRegExp **::** — See section 7
WhiteSpace
LineTerminator
Comment
Token
RegularExpressionLiteral

WhiteSpace **::** — See section 7.2
<TAB>
<VT>
<FF>
<SP>
<NBSP>
<USP>

LineTerminator **::** — See section 7.3
<LF>
<CR>
<LS>
<PS>

Comment **::** — See section 7.4
MultiLineComment
SingleLineComment

MultiLineComment **::** — See section 7.4
/* *MultiLineCommentChars*$_{opt}$ ***/**

MultiLineCommentChars **::** — See section 7.4
MultiLineNotAsteriskChar MultiLineCommentChars$_{opt}$
***** *PostAsteriskCommentChars*$_{opt}$

PostAsteriskCommentChars **::** — See section 7.4
MultiLineNotForwardSlashOrAsteriskChar MultiLineCommentChars$_{opt}$
***** *PostAsteriskCommentChars*$_{opt}$

MultiLineNotAsteriskChar **::** — See section 7.4
SourceCharacter **but not** *asterisk* ***

MultiLineNotForwardSlashOrAsteriskChar **::** — See section 7.4
SourceCharacter **but not** *forward-slash* **/ or** *asterisk* ***

--`,,```,,,,````-`-`,,`,,`,`,,`---
Copyright International Organization for Standardization
Provided by IHS under license with ISO
No reproduction or networking permitted without license from IHS
Not for Resale
© ISO/IEC 2002 – All rights reserved

SingleLineComment **::** See section 7.4
// *SingleLineCommentChars*$_{opt}$

SingleLineCommentChars **::** See section 7.4
SingleLineCommentChar SingleLineCommentChars$_{opt}$

SingleLineCommentChar **::** See section 7.4
SourceCharacter **but not** *LineTerminator*

Token **::** See section 7.5
ReservedWord
Identifier
Punctuator
NumericLiteral
StringLiteral

ReservedWord **::** See section 7.5.1
Keyword
FutureReservedWord
NullLiteral
BooleanLiteral

Keyword **:: one of** See section 7.5.2

break	**else**	**new**	**var**
case	**finally**	**return**	**void**
catch	**for**	**switch**	**while**
continue	**function**	**this**	**with**
default	**if**	**throw**	
delete	**in**	**try**	
do	**instanceof**	**typeof**	

FutureReservedWord **:: one of** See section 7.5.3

abstract	**enum**	**int**	**short**
boolean	**export**	**interface**	**static**
byte	**extends**	**long**	**super**
char	**final**	**native**	**synchronized**
class	**float**	**package**	**throws**
const	**goto**	**private**	**transient**
debugger	**implements**	**protected**	**volatile**
double	**import**	**public**	

Identifier **::** See section 7.6
IdentifierName **but not** *ReservedWord*

IdentifierName **::** See section 7.6
IdentifierStart
IdentifierName IdentifierPart

IdentifierStart **::** See section 7.6
UnicodeLetter
$
_
**** *UnicodeEscapeSequence*

© ISO/IEC 2002 – All rights reserved

Copyright International Organization for Standardization
Provided by IHS under license with ISO
No reproduction or networking permitted without license from IHS
Not for Resale

IdentifierPart **::** See section 7.6
IdentifierStart
UnicodeCombiningMark
UnicodeDigit
UnicodeConnectorPunctuation
\ *UnicodeEscapeSequence*

UnicodeLetter See section 7.6
any character in the Unicode categories “Uppercase letter (Lu)”, “Lowercase letter (Ll)”, “Titlecase letter (Lt)”, “Modifier letter (Lm)”, “Other letter (Lo)”, or “Letter number (Nl)”.

UnicodeCombiningMark See section 7.6
any character in the Unicode categories “Non-spacing mark (Mn)” or “Combining spacing mark (Mc)”

UnicodeDigit See section 7.6
any character in the Unicode category “Decimal number (Nd)”

UnicodeConnectorPunctuation See section 7.6
any character in the Unicode category “Connector punctuation (Pc)”

HexDigit **:: one of** See section 7.6

0	**1**	**2**	**3**	**4**	**5**	**6**	**7**	**8**	**9**	**a**	**b**	**c**	**d**	**e**	**f**	**A**	**B**	**C**	**D**	**E**	**F**

Punctuator **:: one of** See section 7.7

{	**}**	**(**	**)**	**[**	**]**
.	**;**	**,**	**<**	**>**	**<=**
>=	**==**	**!=**	**===**	**!==**	
+	**-**	*****	**%**	**++**	**--**
<<	**>>**	**>>>**	**&**	**|**	**^**
!	**~**	**&&**	**||**	**?**	**:**
=	**+=**	**-=**	***=**	**%=**	**<<=**
>>=	**>>>=**	**&=**	**|=**	**^=**	
{	**}**	**(**	**)**	**[**	**]**

DivPunctuator **:: one of** See section 7.7

/	**/=**

Literal **::** See section 8
NullLiteral
BooleanLiteral
NumericLiteral
StringLiteral

NullLiteral **::** See section 7.8.1
null

BooleanLiteral **::** See section 7.8.2
true
false

NumericLiteral **::** See section 7.8.3
DecimalLiteral
HexIntegerLiteral

© ISO/IEC 2002 – All rights reserved
Copyright International Organization for Standardization
Provided by IHS under license with ISO
No reproduction or networking permitted without license from IHS
Not for Resale

DecimalLiteral **::** See section 7.8.3
DecimalIntegerLiteral **.** *DecimalDigits*$_{opt}$ *ExponentPart*$_{opt}$
. *DecimalDigits ExponentPart*$_{opt}$
DecimalIntegerLiteral ExponentPart$_{opt}$

DecimalIntegerLiteral **::** See section 7.8.3
0
NonZeroDigit DecimalDigits$_{opt}$

DecimalDigits **::** See section 7.8.3
DecimalDigit
DecimalDigits DecimalDigit

DecimalDigit **:: one of** See section 7.8.3
0 1 2 3 4 5 6 7 8 9

ExponentIndicator **:: one of** See section 7.8.3
e E

SignedInteger **::** See section 7.8.3
DecimalDigits
+ *DecimalDigits*
– *DecimalDigits*

HexIntegerLiteral **::** See section 7.8.3
0x *HexDigit*
0X *HexDigit*
HexIntegerLiteral HexDigit

StringLiteral **::** See section 7.8.4
" *DoubleStringCharacters*$_{opt}$ **"**
' *SingleStringCharacters*$_{opt}$ **'**

DoubleStringCharacters **::** See section 7.8.4
DoubleStringCharacter DoubleStringCharacters$_{opt}$

SingleStringCharacters **::** See section 7.8.4
SingleStringCharacter SingleStringCharacters$_{opt}$

DoubleStringCharacter **::** See section 7.8.4
SourceCharacter **but not** *double-quote* **"** **or** *backslash* **** **or** *LineTerminator*
**** *EscapeSequence*

SingleStringCharacter **::** See section 7.8.4
SourceCharacter **but not** *single-quote* **'** **or** *backslash* **** **or** *LineTerminator*
**** *EscapeSequence*

EscapeSequence **::** See section 7.8.4
CharacterEscapeSequence
0 [lookahead ∉ *DecimalDigit*]
HexEscapeSequence
UnicodeEscapeSequence

CharacterEscapeSequence **::** See section 7.8.4
SingleEscapeCharacter
NonEscapeCharacter

SingleEscapeCharacter **:: one of** See section 7.8.4
' " \ b f n r t v

© ISO/IEC 2002 – All rights reserved

Copyright International Organization for Standardization
Provided by IHS under license with ISO
No reproduction or networking permitted without license from IHS
Not for Resale

EscapeCharacter **::** See section 7.8.4
SingleEscapeCharacter
DecimalDigit
x
u

HexEscapeSequence **::** See section 7.8.4
x *HexDigit HexDigit*

UnicodeEscapeSequence **::** See section 7.8.4
u *HexDigit HexDigit HexDigit HexDigit*

RegularExpressionLiteral **::** See section 7.8.5
/ *RegularExpressionBody* **/** *RegularExpressionFlags*

RegularExpressionBody **::** See section 7.8.5
RegularExpressionFirstChar RegularExpressionChars

RegularExpressionChars **::** See section 7.8.5
[empty]
RegularExpressionChars RegularExpressionChar

RegularExpressionFirstChar **::** See section 7.8.5
NonTerminator **but not * or \ or /**
BackslashSequence

RegularExpressionChar **::** See section 7.8.5
NonTerminator **but not \ or /**
BackslashSequence

BackslashSequence **::** See section 7.8.5
**** *NonTerminator*

NonTerminator **::** See section 7.8.5
SourceCharacter **but not** *LineTerminator*

RegularExpressionFlags **::** See section 7.8.5
[empty]
RegularExpressionFlags IdentifierPart

A.2 Number Conversions

StringNumericLiteral **:::** See section 9.3.1
$StrWhiteSpace_{opt}$
$StrWhiteSpace_{opt}$ *StrNumericLiteral* $StrWhiteSpace_{opt}$

StrWhiteSpace **:::** See section 9.3.1
StrWhiteSpaceChar $StrWhiteSpace_{opt}$

StrWhiteSpaceChar **:::** See section 9.3.1
<TAB>
<SP>
<NBSP>
<FF>
<VT>
<CR>
<LF>
<LS>
<PS>
<USP>

--`,,```,,,,````-`-,,`,,`,`,,`---

© ISO/IEC 2002 – All rights reserved
Copyright International Organization for Standardization
Provided by IHS under license with ISO
No reproduction or networking permitted without license from IHS
Not for Resale

StrNumericLiteral **:::** See section 9.3.1
StrDecimalLiteral
HexIntegerLiteral

StrDecimalLiteral **:::** See section 9.3.1
StrUnsignedDecimalLiteral
+ *StrUnsignedDecimalLiteral*
- *StrUnsignedDecimalLiteral*

StrUnsignedDecimalLiteral **:::** See section 9.3.1
`Infinity`
DecimalDigits **.** $DecimalDigits_{opt}$ $ExponentPart_{opt}$
. *DecimalDigits* $ExponentPart_{opt}$
DecimalDigits $ExponentPart_{opt}$

DecimalDigits **:::** See section 9.3.1
DecimalDigit
DecimalDigits DecimalDigit

DecimalDigit **::: one of** See section 9.3.1
`0 1 2 3 4 5 6 7 8 9`

ExponentPart **:::** See section 9.3.1
ExponentIndicator SignedInteger

ExponentIndicator **::: one of** See section 9.3.1
`e E`

SignedInteger **:::** See section 9.3.1
DecimalDigits
+ *DecimalDigits*
- *DecimalDigits*

HexIntegerLiteral **:::** See section 9.3.1
`0x` *HexDigit*
`0X` *HexDigit*
HexIntegerLiteral HexDigit

HexDigit **::: one of** See section 9.3.1
`0 1 2 3 4 5 6 7 8 9 a b c d e f A B C D E F`

A.3 Expressions

PrimaryExpression **:** See section 11.1
`this`
Identifier
Literal
ArrayLiteral
ObjectLiteral
(*Expression* **)**

ArrayLiteral **:** See section 11.1.4
[$Elision_{opt}$ **]**
[*ElementList* **]**
[*ElementList* **,** $Elision_{opt}$ **]**

ElementList **:** See section 11.1.4
$Elision_{opt}$ *AssignmentExpression*
ElementList **,** $Elision_{opt}$ *AssignmentExpression*

© ISO/IEC 2002 – All rights reserved

Copyright International Organization for Standardization
Provided by IHS under license with ISO
No reproduction or networking permitted without license from IHS
Not for Resale

Elision **:** See section 11.1.4
,
Elision **,**

ObjectLiteral **:** See section 11.1.5
{ }
{ *PropertyNameAndValueList* **}**

PropertyNameAndValueList **:** See section 11.1.5
PropertyName **:** *AssignmentExpression*
PropertyNameAndValueList **,** *PropertyName* **:** *AssignmentExpression*

PropertyName **:** See section 11.1.5
Identifier
StringLiteral
NumericLiteral

MemberExpression **:** See section 11.2
PrimaryExpression
FunctionExpression
MemberExpression **[** *Expression* **]**
MemberExpression **.** *Identifier*
new *MemberExpression Arguments*

NewExpression **:** See section 11.2
MemberExpression
new *NewExpression*

CallExpression **:** See section 11.2
MemberExpression Arguments
CallExpression Arguments
CallExpression **[** *Expression* **]**
CallExpression **.** *Identifier*

Arguments **:** See section 11.2
( )
(*ArgumentList* **)**

ArgumentList **:** See section 11.2
AssignmentExpression
ArgumentList **,** *AssignmentExpression*

LeftHandSideExpression **:** See section 11.2
NewExpression
CallExpression

PostfixExpression **:** See section 11.3
LeftHandSideExpression
LeftHandSideExpression [no *LineTerminator* here] **++**
LeftHandSideExpression [no *LineTerminator* here] **--**

© ISO/IEC 2002 – All rights reserved
Copyright International Organization for Standardization
Provided by IHS under license with ISO
No reproduction or networking permitted without license from IHS
Not for Resale

UnaryExpression **:** See section 11.4
PostfixExpression
delete *UnaryExpression*
void *UnaryExpression*
typeof *UnaryExpression*
++ *UnaryExpression*
-- *UnaryExpression*
+ *UnaryExpression*
- *UnaryExpression*
~ *UnaryExpression*
! *UnaryExpression*

MultiplicativeExpression **:** See section 11.5
UnaryExpression
MultiplicativeExpression ***** *UnaryExpression*
MultiplicativeExpression **/** *UnaryExpression*
MultiplicativeExpression **%** *UnaryExpression*

AdditiveExpression **:** See section 11.6
MultiplicativeExpression
AdditiveExpression **+** *MultiplicativeExpression*
AdditiveExpression **–** *MultiplicativeExpression*

ShiftExpression **:** See section 11.7
AdditiveExpression
ShiftExpression **<<** *AdditiveExpression*
ShiftExpression **>>** *AdditiveExpression*
ShiftExpression **>>>** *AdditiveExpression*

RelationalExpression **:** See section 11.8
ShiftExpression
RelationalExpression **<** *ShiftExpression*
RelationalExpression **>** *ShiftExpression*
RelationalExpression **<=** *ShiftExpression*
RelationalExpression **>=** *ShiftExpression*
RelationalExpression **instanceof** *ShiftExpression*
RelationalExpression **in** *ShiftExpression*

RelationalExpressionNoIn **:** See section 11.8
ShiftExpression
RelationalExpressionNoIn **<** *ShiftExpression*
RelationalExpressionNoIn **>** *ShiftExpression*
RelationalExpressionNoIn **<=** *ShiftExpression*
RelationalExpressionNoIn **>=** *ShiftExpression*
RelationalExpressionNoIn **instanceof** *ShiftExpression*

EqualityExpression **:** See section 11.9
RelationalExpression
EqualityExpression **==** *RelationalExpression*
EqualityExpression **!=** *RelationalExpression*
EqualityExpression **===** *RelationalExpression*
EqualityExpression **!==** *RelationalExpression*

© ISO/IEC 2002 – All rights reserved

Copyright International Organization for Standardization
Provided by IHS under license with ISO
No reproduction or networking permitted without license from IHS
Not for Resale

EqualityExpressionNoIn **:** See section 11.9
RelationalExpressionNoIn
EqualityExpressionNoIn **==** *RelationalExpressionNoIn*
EqualityExpressionNoIn **!=** *RelationalExpressionNoIn*
EqualityExpressionNoIn **===** *RelationalExpressionNoIn*
EqualityExpressionNoIn **!==** *RelationalExpressionNoIn*

BitwiseANDExpression **:** See section 11.10
EqualityExpression
BitwiseANDExpression **&** *EqualityExpression*

BitwiseANDExpressionNoIn **:** See section 11.10
EqualityExpressionNoIn
BitwiseANDExpressionNoIn **&** *EqualityExpressionNoIn*

BitwiseXORExpression **:** See section 11.10
BitwiseANDExpression
BitwiseXORExpression **^** *BitwiseANDExpression*

BitwiseXORExpressionNoIn **:** See section 11.10
BitwiseANDExpressionNoIn
BitwiseXORExpressionNoIn **^** *BitwiseANDExpressionNoIn*

BitwiseORExpression **:** See section 11.10
BitwiseXORExpression
BitwiseORExpression **|** *BitwiseXORExpression*

BitwiseORExpressionNoIn **:** See section 11.10
BitwiseXORExpressionNoIn
BitwiseORExpressionNoIn **|** *BitwiseXORExpressionNoIn*

LogicalANDExpression **:** See section 11.11
BitwiseORExpression
LogicalANDExpression **&&** *BitwiseORExpression*

LogicalANDExpressionNoIn **:** See section 11.11
BitwiseORExpressionNoIn
LogicalANDExpressionNoIn **&&** *BitwiseORExpressionNoIn*

LogicalORExpression **:** See section 11.11
LogicalANDExpression
LogicalORExpression **||** *LogicalANDExpression*

LogicalORExpressionNoIn **:** See section 11.11
LogicalANDExpressionNoIn
LogicalORExpressionNoIn **||** *LogicalANDExpressionNoIn*

ConditionalExpression **:** See section 11.12
LogicalORExpression
LogicalORExpression **?** *AssignmentExpression* **:** *AssignmentExpression*

ConditionalExpressionNoIn **:** See section 11.12
LogicalORExpressionNoIn
LogicalORExpressionNoIn **?** *AssignmentExpressionNoIn* **:** *AssignmentExpressionNoIn*

AssignmentExpression **:** See section 11.13
ConditionalExpression
LeftHandSideExpression AssignmentOperator AssignmentExpression

Copyright International Organization for Standardization
Provided by IHS under license with ISO
No reproduction or networking permitted without license from IHS
Not for Resale
© ISO/IEC 2002 – All rights reserved

AssignmentExpressionNoIn **:** See section 11.13
ConditionalExpressionNoIn
LeftHandSideExpression AssignmentOperator AssignmentExpressionNoIn

AssignmentOperator **: one of** See section 11.13
= *= /= %= += -= <<= >>= >>>= &= ^= |=

Expression **:** See section 11.14
AssignmentExpression
Expression **,** *AssignmentExpression*

ExpressionNoIn **:** See section 11.14
AssignmentExpressionNoIn
ExpressionNoIn **,** *AssignmentExpressionNoIn*

A.4 Statements

Statement **:** See section 12
Block
VariableStatement
EmptyStatement
ExpressionStatement
IfStatement
IterationStatement
ContinueStatement
BreakStatement
ReturnStatement
WithStatement
LabelledStatement
SwitchStatement
ThrowStatement
TryStatement

Block **:** See section 12.1
{ *StatementList*$_{opt}$ **}**

StatementList **:** See section 12.1
Statement
StatementList Statement

VariableStatement **:** See section 12.2
var *VariableDeclarationList* **;**

VariableDeclarationList **:** See section 12.2
VariableDeclaration
VariableDeclarationList **,** *VariableDeclaration*

VariableDeclarationListNoIn **:** See section 12.2
VariableDeclarationNoIn
VariableDeclarationListNoIn **,** *VariableDeclarationNoIn*

VariableDeclaration **:** See section 12.2
Identifier Initialiser$_{opt}$

VariableDeclarationNoIn **:** See section 12.2
Identifier InitialiserNoIn$_{opt}$

Initialiser **:** See section 12.2
= *AssignmentExpression*

--`,,```,,,,````-`-`,,`,,`,`,,`---

© ISO/IEC 2002 – All rights reserved

Copyright International Organization for Standardization
Provided by IHS under license with ISO
No reproduction or networking permitted without license from IHS
Not for Resale

InitialiserNoIn : See section 12.2
= *AssignmentExpressionNoIn*

EmptyStatement : See section 12.3
;

ExpressionStatement : See section 12.4
[lookahead ∉ {**{, function**}] *Expression* **;**

IfStatement : See section 12.5
if (*Expression* **)** *Statement* **else** *Statement*
if (*Expression* **)** *Statement*

IterationStatement : See section 12.6
do *Statement* **while (** *Expression* **);**
while (*Expression* **)** *Statement*
for (*ExpressionNoIn*$_{opt}$**;** *Expression*$_{opt}$ **;** *Expression*$_{opt}$ **)** *Statement*
for (var *VariableDeclarationListNoIn***;** *Expression*$_{opt}$ **;** *Expression*$_{opt}$ **)** *Statement*
for (*LeftHandSideExpression* **in** *Expression* **)** *Statement*
for (var *VariableDeclarationNoIn* **in** *Expression* **)** *Statement*

ContinueStatement : See section 12.7
continue [no *LineTerminator* here] *Identifier*$_{opt}$ **;**

BreakStatement : See section 12.8
break [no *LineTerminator* here] *Identifier*$_{opt}$ **;**

ReturnStatement : See section 12.9
return [no *LineTerminator* here] *Expression*$_{opt}$ **;**

WithStatement : See section 12.10
with (*Expression* **)** *Statement*

SwitchStatement : See section 12.11
switch (*Expression* **)** *CaseBlock*

CaseBlock : See section 12.11
{ *CaseClauses*$_{opt}$ **}**
{ *CaseClauses*$_{opt}$ *DefaultClause CaseClauses*$_{opt}$ **}**

CaseClauses : See section 12.11
CaseClause
CaseClauses CaseClause

CaseClause : See section 12.11
case *Expression* **:** *StatementList*$_{opt}$

DefaultClause : See section 12.11
default : *StatementList*$_{opt}$

LabelledStatement : See section 12.12
Identifier **:** *Statement*

ThrowStatement : See section 12.13
throw [no *LineTerminator* here] *Expression ;*

© ISO/IEC 2002 – All rights reserved
Copyright International Organization for Standardization
Provided by IHS under license with ISO
No reproduction or networking permitted without license from IHS
Not for Resale

TryStatement **:** See section 12.14
`try` *Block Catch*
`try` *Block Finally*
`try` *Block Catch Finally*

Catch **:** See section 12.14
`catch (`*Identifier* **`)`** *Block*

Finally **:** See section 12.14
`finally` *Block*

A.5 Functions and Programs

FunctionDeclaration **:** See section 13
`function` *Identifier* **`(`** $FormalParameterList_{opt}$ **`) {`** *FunctionBody* **`}`**

FunctionExpression **:** See section 13
`function` $Identifier_{opt}$ **`(`** $FormalParameterList_{opt}$ **`) {`** *FunctionBody* **`}`**

FormalParameterList **:** See section 13
Identifier
FormalParameterList **`,`** *Identifier*

FunctionBody **:** See section 13
SourceElements

Program **:** See section 14
SourceElements

SourceElements **:** See section 14
SourceElement
SourceElements SourceElement

SourceElement **:** See section 14
Statement
FunctionDeclaration

A.6 Universal Resource Identifier Character Classes

uri **:::** See section 15.1.3
$uriCharacters_{opt}$

uriCharacters **:::** See section 15.1.3
uriCharacter $uriCharacters_{opt}$

uriCharacter **:::** See section 15.1.3
uriReserved
uriUnescaped
uriEscaped

uriReserved **::: one of** See section 15.1.3
`;  /  ?  :  @  &  =  +  $  ,`

uriUnescaped **:::** See section 15.1.3
uriAlpha
DecimalDigit
uriMark

© ISO/IEC 2002 – All rights reserved

Copyright International Organization for Standardization
Provided by IHS under license with ISO
No reproduction or networking permitted without license from IHS
Not for Resale

uriEscaped **:::** See section 15.1.3
`%` *HexDigit HexDigit*

uriAlpha **::: one of** See section 15.1.3
`a b c d e f g h i j k l m n o p q r s t u v w x y z`
`A B C D E F G H I J K L M N O P Q R S T U V W X Y Z`

uriMark **::: one of** See section 15.1.3
`- _ . ! ~ * ' ( )`

A.7 Regular Expressions

Pattern **::** See section 15.10.1
Disjunction

Disjunction **::** See section 15.10.1
Alternative
Alternative `|` *Disjunction*

Alternative **::** See section 15.10.1
[empty]
Alternative Term

Term **::** See section 15.10.1
Assertion
Atom
Atom Quantifier

Assertion **::** See section 15.10.1
`^`
`$`
`\ b`
`\ B`

Quantifier **::** See section 15.10.1
QuantifierPrefix
QuantifierPrefix `?`

QuantifierPrefix **::** See section 15.10.1
`*`
`+`
`?`
`{` *DecimalDigits* `}`
`{` *DecimalDigits* `,` `}`
`{` *DecimalDigits* `,` *DecimalDigits* `}`

Atom **::** See section 15.10.1
PatternCharacter
`.`
`\` *AtomEscape*
CharacterClass
`(` *Disjunction* `)`
`(` `?` `:` *Disjunction* `)`
`(` `?` `=` *Disjunction* `)`
`(` `?` `!` *Disjunction* `)`

PatternCharacter **::** *SourceCharacter* **but not any of:** See section 15.10.1
`^ $ \ . * + ? ( ) [ ] { } |`

Copyright International Organization for Standardization
Provided by IHS under license with ISO
No reproduction or networking permitted without license from IHS
Not for Resale
© ISO/IEC 2002 – All rights reserved

AtomEscape **::** See section 15.10.1
DecimalEscape
CharacterEscape
CharacterClassEscape

CharacterEscape **::** See section 15.10.1
ControlEscape
c *ControlLetter*
HexEscapeSequence
UnicodeEscapeSequence
IdentityEscape

ControlEscape **:: one of** See section 15.10.1
f n r t v

ControlLetter **:: one of** See section 15.10.1
a b c d e f g h i j k l m n o p q r s t u v w x y z
A B C D E F G H I J K L M N O P Q R S T U V W X Y Z

IdentityEscape **::** See section 15.10.1
SourceCharacter **but not** *IdentifierPart*

DecimalEscape **::** See section 15.10.1
DecimalIntegerLiteral [lookahead ∉ *DecimalDigit*]

CharacterClass **::** See section 15.10.1
[[lookahead ∉ {^}] *ClassRanges* **]**
[^ *ClassRanges* **]**

ClassRanges **::** See section 15.10.1
[empty]
NonemptyClassRanges

NonemptyClassRanges **::** See section 15.10.1
ClassAtom
ClassAtom NonemptyClassRangesNoDash
ClassAtom **-** *ClassAtom ClassRanges*

NonemptyClassRangesNoDash **::** See section 15.10.1
ClassAtom
ClassAtomNoDash NonemptyClassRangesNoDash
ClassAtomNoDash **-** *ClassAtom ClassRanges*

ClassAtom **::** See section 15.10.1
-
ClassAtomNoDash

ClassAtomNoDash **::** See section 15.10.1
SourceCharacter **but not one of \ ] -**
**** *ClassEscape*

ClassEscape **::** See section 15.10.1
DecimalEscape
b
CharacterEscape
CharacterClassEscape

© ISO/IEC 2003 – All rights reserved

Copyright International Organization for Standardization
Provided by IHS under license with ISO
No reproduction or networking permitted without license from IHS
Not for Resale

Annex B
(informative)

Compatibility

B.1 Additional Syntax

Past editions of ECMAScript have included additional syntax and semantics for specifying octal literals and octal escape sequences. These have been removed from this edition of ECMAScript. This non-normative annex presents uniform syntax and semantics for octal literals and octal escape sequences for compatibility with some older ECMAScript programs.

B.1.1 Numeric Literals

The syntax and semantics of section 7.8.3 can be extended as follows:

Syntax

NumericLiteral **::**
DecimalLiteral
HexIntegerLiteral
OctalIntegerLiteral

OctalIntegerLiteral **::**
0 *OctalDigit*
OctalIntegerLiteral OctalDigit

Semantics

- The MV of *NumericLiteral* **::** *OctalIntegerLiteral* is the MV of *OctalIntegerLiteral*.
- The MV of *OctalDigit* **::** **0** is 0.
- The MV of *OctalDigit* **::** **1** is 1.
- The MV of *OctalDigit* **::** **2** is 2.
- The MV of *OctalDigit* **::** **3** is 3.
- The MV of *OctalDigit* **::** **4** is 4.
- The MV of *OctalDigit* **::** **5** is 5.
- The MV of *OctalDigit* **::** **6** is 6.
- The MV of *OctalDigit* **::** **7** is 7.
- The MV of *OctalIntegerLiteral* **::** **0** *OctalDigit* is the MV of *OctalDigit*.
- The MV of *OctalIntegerLiteral* **::** *OctalIntegerLiteral OctalDigit* is (the MV of *OctalIntegerLiteral* times 8) plus the MV of *OctalDigit*.

B.1.2 String Literals

The syntax and semantics of section 7.8.4 can be extended as follows:

Syntax

EscapeSequence **::**
CharacterEscapeSequence
OctalEscapeSequence
HexEscapeSequence
UnicodeEscapeSequence

© ISO/IEC 2002 – All rights reserved
Copyright International Organization for Standardization
Provided by IHS under license with ISO
No reproduction or networking permitted without license from IHS
Not for Resale

OctalEscapeSequence **::**
OctalDigit [lookahead ∉ *DecimalDigit*]
ZeroToThree OctalDigit [lookahead ∉ *DecimalDigit*]
FourToSeven OctalDigit
ZeroToThree OctalDigit OctalDigit

ZeroToThree **:: one of**
0 1 2 3

FourToSeven **:: one of**
4 5 6 7

Semantics

- The CV of *EscapeSequence* **::** *OctalEscapeSequence* is the CV of the *OctalEscapeSequence*.
- The CV of *OctalEscapeSequence* **::** *OctalDigit* [lookahead ∉ *DecimalDigit*] is the character whose code point value is the MV of the *OctalDigit*.
- The CV of *OctalEscapeSequence* **::** *ZeroToThree OctalDigit* [lookahead ∉ *DecimalDigit*] is the character whose code point value is (8 times the MV of the *ZeroToThree*) plus the MV of the *OctalDigit*.
- The CV of *OctalEscapeSequence* **::** *FourToSeven OctalDigit* is the character whose code point value is (8 times the MV of the *FourToSeven*) plus the MV of the *OctalDigit*.
- The CV of *OctalEscapeSequence* **::** *ZeroToThree OctalDigit OctalDigit* is the character whose code point value is (64 (that is, 8^2) times the MV of the *ZeroToThree*) plus (8 times the MV of the first *OctalDigit*) plus the MV of the second *OctalDigit*.
- The MV of *ZeroToThree* **::** **0** is 0.
- The MV of *ZeroToThree* **::** **1** is 1.
- The MV of *ZeroToThree* **::** **2** is 2.
- The MV of *ZeroToThree* **::** **3** is 3.
- The MV of *FourToSeven* **::** **4** is 4.
- The MV of *FourToSeven* **::** **5** is 5.
- The MV of *FourToSeven* **::** **6** is 6.
- The MV of *FourToSeven* **::** **7** is 7.

B.2 Additional Properties

Some implementations of ECMAScript have included additional properties for some of the standard native objects. This non-normative annex suggests uniform semantics for such properties without making the properties or their semantics part of this standard.

B.2.1 escape (string)

The **escape** function is a property of the global object. It computes a new version of a string value in which certain characters have been replaced by a hexadecimal escape sequence.

For those characters being replaced whose code point value is **0xFF** or less, a two-digit escape sequence of the form **%***xx* is used. For those characters being replaced whose code point value is greater than **0xFF**, a four-digit escape sequence of the form **%u***xxxx* is used

When the **escape** function is called with one argument *string*, the following steps are taken:

1. Call ToString(*string*).
2. Compute the number of characters in Result(1).
3. Let *R* be the empty string.
4. Let *k* be 0.
5. If *k* equals Result(2), return *R*.
6. Get the character (represented as a 16-bit unsigned integer) at position *k* within Result(1).

© ISO/IEC 2002 – All rights reserved

Copyright International Organization for Standardization
Provided by IHS under license with ISO
No reproduction or networking permitted without license from IHS
Not for Resale

7. If Result(6) is one of the 69 nonblank characters **"ABCDEFGHIJKLMNOPQRSTUVWXYZabcdefghijklmnopqrstuvwxyz0123456789@*_+-./"** then go to step 13.
8. If Result(6), is less than 256, go to step 11.
9. Let *S* be a string containing six characters **"%u***wxyz***"** where *wxyz* are four hexadecimal digits encoding the value of Result(6).
10. Go to step 14.
11. Let *S* be a string containing three characters **"%***xy***"** where *xy* are two hexadecimal digits encoding the value of Result(6).
12. Go to step 14.
13. Let *S* be a string containing the single character Result(6).
14. Let *R* be a new string value computed by concatenating the previous value of *R* and *S*.
15. Increase *k* by 1.
16. Go to step 5.

NOTE The encoding is partly based on the encoding described in RFC1738, but the entire encoding specified in this standard is described above without regard to the contents of RFC1738.

B.2.2 unescape (string)

The **unescape** function is a property of the global object. It computes a new version of a string value in which each escape sequence of the sort that might be introduced by the **escape** function is replaced with the character that it represents.

When the **unescape** function is called with one argument *string*, the following steps are taken:

1. Call ToString(*string*).
2. Compute the number of characters in Result(1).
3. Let *R* be the empty string.
4. Let *k* be 0.
5. If *k* equals Result(2), return *R*.
6. Let *c* be the character at position *k* within Result(1).
7. If *c* is not **%**, go to step 18.
8. If *k* is greater than Result(2)−6, go to step 14.
9. If the character at position *k*+1 within Result(1) is not **u**, go to step 14.
10. If the four characters at positions *k*+2, *k*+3, *k*+4, and *k*+5 within Result(1) are not all hexadecimal digits, go to step 14.
11. Let *c* be the character whose code point value is the integer represented by the four hexadecimal digits at positions *k*+2, *k*+3, *k*+4, and *k*+5 within Result(1).
12. Increase k by 5.
13. Go to step 18.
14. If *k* is greater than Result(2)−3, go to step 18.
15. If the two characters at positions *k*+1 and *k*+2 within Result(1) are not both hexadecimal digits, go to step 18.
16. Let *c* be the character whose code point value is the integer represented by two zeroes plus the two hexadecimal digits at positions *k*+1 and *k*+2 within Result(1).
17. Increase *k* by 2.
18. Let *R* be a new string value computed by concatenating the previous value of *R* and *c*.
19. Increase *k* by 1.
20. Go to step 5.

B.2.3 String.prototype.substr (start, length)

The **substr** method takes two arguments, *start* and *length*, and returns a substring of the result of converting this object to a string, starting from character position *start* and running for *length* characters (or through the end of the string is *length* is **undefined**). If *start* is negative, it is treated as (*sourceLength*+*start*) where *sourceLength* is the length of the string. The result is a string value, not a String object. The following steps are taken:

1. Call ToString, giving it the **this** value as its argument.
2. Call ToInteger(*start*).
3. If *length* is **undefined**, use **+∞**; otherwise call ToInteger(*length*).

--`,,```,,,,````-`-`,,`,,`,`,,`---
© ISO/IEC 2002 – All rights reserved
Copyright International Organization for Standardization
Provided by IHS under license with ISO
No reproduction or networking permitted without license from IHS
Not for Resale

4. Compute the number of characters in Result(1).
5. If Result(2) is positive or zero, use Result(2); else use max(Result(4)+Result(2),0).
6. Compute min(max(Result(3),0), Result(4)–Result(5)).
7. If Result(6) ≤ 0, return the empty string "".
8. Return a string containing Result(6) consecutive characters from Result(1) beginning with the character at position Result(5).

The **`length`** property of the **`substr`** method is **2**.

NOTE The **`substr`** function is intentionally generic; it does not require that its **this** value be a String object. Therefore it can be transferred to other kinds of objects for use as a method.

B.2.4 Date.prototype.getYear ( )

NOTE The **`getFullYear`** method is preferred for nearly all purposes, because it avoids the "year 2000 problem."

When the **getYear** method is called with no arguments the following steps are taken:

1. Let *t* be this time value.
2. If *t* is **NaN**, return **NaN**.
3. Return YearFromTime(LocalTime(*t*)) − 1900.

B.2.5 Date.prototype.setYear (year)

NOTE The **`setFullYear`** method is preferred for nearly all purposes, because it avoids the "year 2000 problem."

When the **setYear** method is called with one argument *year* the following steps are taken:

1. Let *t* be the result of LocalTime(this time value); but if this time value is **NaN**, let *t* be **+0**.
2. Call ToNumber(*year*).
3. If Result(2) is **NaN**, set the [[Value]] property of the **this** value to **NaN** and return **NaN**.
4. If Result(2) is not **NaN** and 0 ≤ ToInteger(Result(2)) ≤ 99 then Result(4) is ToInteger(Result(2)) + 1900. Otherwise, Result(4) is Result(2).
5. Compute MakeDay(Result(4), MonthFromTime(*t*), DateFromTime(*t*)).
6. Compute UTC(MakeDate(Result(5), TimeWithinDay(*t*))).
7. Set the [[Value]] property of the **this** value to TimeClip(Result(6)).
8. Return the value of the [[Value]] property of the **this** value.

B.2.6 Date.prototype.toGMTString ( )

NOTE The property **`toUTCString`** is preferred. The **`toGMTString`** property is provided principally for compatibility with old code. It is recommended that the **`toUTCString`** property be used in new ECMAScript code.

The Function object that is the initial value of **`Date.prototype.toGMTString`** is the same Function object that is the initial value of **`Date.prototype.toUTCString`**.

© ISO/IEC 2002 – All rights reserved

Copyright International Organization for Standardization
Provided by IHS under license with ISO
No reproduction or networking permitted without license from IHS
Not for Resale

ICS 35.060

Price based on 169 pages

© ISO/IEC 2002 – All rights reserved

Copyright International Organization for Standardization
Provided by IHS under license with ISO
No reproduction or networking permitted without license from IHS

Not for Resale