INTERNATIONAL STANDARD

ISO/IEC 15991

Second edition
2003-04-01

Information technology — Telecommunications and information exchange between systems — Private Integrated Services Network — Specification, functional model and information flows — Call Priority Interruption and Call Priority Interruption Protection supplementary services

Technologies de l'information — Télécommunications et échange d'information entre systèmes — Réseau privé à intégration de services — Spécification, modèle fonctionnel et flux d'informations — Services supplémentaires d'interruption de priorité d'appel et de protection d'interruption de priorité d'appel

Reference number
ISO/IEC 15991:2003(E)

© ISO/IEC 2003

Copyright International Organization for Standardization
Provided by IHS under license with ISO
No reproduction or networking permitted without license from IHS

Not for Resale

PDF disclaimer

This PDF file may contain embedded typefaces. In accordance with Adobe's licensing policy, this file may be printed or viewed but shall not be edited unless the typefaces which are embedded are licensed to and installed on the computer performing the editing. In downloading this file, parties accept therein the responsibility of not infringing Adobe's licensing policy. The ISO Central Secretariat accepts no liability in this area.

Adobe is a trademark of Adobe Systems Incorporated.

Details of the software products used to create this PDF file can be found in the General Info relative to the file; the PDF-creation parameters were optimized for printing. Every care has been taken to ensure that the file is suitable for use by ISO member bodies. In the unlikely event that a problem relating to it is found, please inform the Central Secretariat at the address given below.

© ISO/IEC 2003

All rights reserved. Unless otherwise specified, no part of this publication may be reproduced or utilized in any form or by any means, electronic or mechanical, including photocopying and microfilm, without permission in writing from either ISO at the address below or ISO's member body in the country of the requester.

ISO copyright office
Case postale 56 • CH-1211 Geneva 20
Tel. + 41 22 749 01 11
Fax + 41 22 749 09 47
E-mail copyright@iso.org
Web www.iso.org

Published in Switzerland

Copyright International Organization for Standardization
Provided by IHS under license with ISO
No reproduction or networking permitted without license from IHS

© ISO/IEC 2003 — All rights reserved

Not for Resale

Contents

Foreword		vi
Introduction		vii
1	Scope	1
2	Conformance	1
3	Normative references	1
4	Terms and definitions	2
4.1	External definitions	2
4.2	Additional network feature	2
4.3	Call, Basic call	2
4.4	Call Priority Interruption Capability Level (CPICL)	2
4.5	Call Priority Interruption Protection Level (CPIPL)	2
4.6	Established call	3
4.7	Impending priority interruption state	3
4.8	Impending priority interruption warning notification	3
4.9	Non-priority call	3
4.10	Priority call	3
4.11	Protected call	3
4.12	Served user	3
4.13	Time to priority interruption	3
4.14	Unprotected call	3
5	List of acronyms	3
6	SS-CPI stage 1 specification	4
6.1	Description	4
6.1.1	General description	4
6.1.2	Qualifications on applicability to telecommunication services	4
6.2	Procedure	4
6.2.1	Provision/withdrawal	4
6.2.2	Normal procedures	4
6.2.3	Exceptional procedures	6
6.3	Interaction with other supplementary services and ANFs	6
6.3.1	Calling Name Identification Presentation (SS-CNIP)	6
6.3.2	Connected Name Identification Presentation (SS-CONP)	6
6.3.3	Completion of Call to Busy Subscriber (SS-CCBS)	6
6.3.4	Completion of Call on No Reply (SS-CCNR)	6
6.3.5	Call Transfer (SS-CT)	6
6.3.6	Call Forwarding Unconditional (SS-CFU)	6
6.3.7	Call Forwarding Busy (SS-CFB)	6
6.3.8	Call Forwarding No Reply (SS-CFNR)	6
6.3.9	Call Deflection (SS-CD)	6
6.3.10	Path Replacement (ANF-PR)	6
6.3.11	Call Offer (SS-CO)	6
6.3.12	Call Intrusion (SS-CI)	6
6.3.13	Do not Disturb (SS-DND)	6
6.3.14	Do not Disturb Override (SS-DNDO)	6
6.3.15	Advice of Charge (SS-AOC)	6

© ISO/IEC 2003 – All rights reserved

Copyright International Organization for Standardization
Provided by IHS under license with ISO
No reproduction or networking permitted without license from IHS
Not for Resale

6.3.16 Recall (SS-RE) **6**
6.3.17 Call Interception (ANF-CINT) **7**
6.3.18 Transit Counter (ANF-TC) **7**
6.3.19 Interaction with Wireless Terminal Location Registration (SS-WTLR) **7**
6.3.20 Interaction with Wireless Terminal Incoming Call (ANF-WTMI) **7**
6.3.21 Interaction with Wireless Terminal Outgoing Call (ANF-WTMO) **7**
6.3.22 Interaction with Wireless Terminal Authentication of a WTM user (SS-WTAT) **7**
6.3.23 Interaction with Wireless Terminal Authentication of a PISN (SS-WTAN) **7**
6.3.24 Message Waiting Indication (SS-MWI) **7**
6.3.25 Common Information (ANF-CMN) **7**
6.3.26 Call Priority Interruption Protection (SS-CPIP) **7**

6.4 Interworking considerations **7**
6.5 Overall SDL **7**

7 SS-CPIP stage 1 specification **11**

7.1 Description **11**

7.1.1 General description **11**
7.1.2 Qualifications on applicability to telecommunication services **11**

7.2 Procedure **11**

7.2.1 Provision/withdrawal **11**
7.2.2 Normal procedures **11**
7.2.3 Exceptional procedures **12**

7.3 Interaction with other supplementary services and ANFs **12**

7.3.1 Calling Name Identification Presentation (SS-CNIP) **12**
7.3.2 Connected Name Identification Presentation (SS-CONP) **12**
7.3.3 Completion of Call to Busy Subscriber (SS-CCBS) **12**
7.3.4 Completion of Call on No Reply (SS-CCNR) **12**
7.3.5 Call Transfer (SS-CT) **12**
7.3.6 Call Forwarding Unconditional (SS-CFU) **12**
7.3.7 Call Forwarding Busy (SS-CFB) **12**
7.3.8 Call Forwarding No Reply (SS-CFNR) **12**
7.3.9 Call Deflection (SS-CD) **12**
7.3.10 Path Replacement (ANF-PR) **12**
7.3.11 Call Offer (SS-CO) **12**
7.3.12 Call Intrusion (SS-CI) **12**
7.3.13 Do not Disturb (SS-DND) **12**
7.3.14 Do not Disturb Override (SS-DNDO) **12**
7.3.15 Advice of Charge (SS-AOC) **12**
7.3.16 Recall (SS-RE) **13**
7.3.17 Call Interception (ANF-CINT) **13**
7.3.18 Transit Counter (ANF-TC) **13**
7.3.19 Interaction with Wireless Terminal Location Registration (SS-WTLR) **13**
7.3.20 Interaction with Wireless Terminal Incoming Call (ANF-WTMI) **13**
7.3.21 Interaction with Wireless Terminal Outgoing Call (ANF-WTMO) **13**
7.3.22 Interaction with Wireless Terminal Authentication of a WTM user (SS-WTAT) **13**
7.3.23 Interaction with Wireless Terminal Authentication of a PISN (SS-WTAN) **13**
7.3.24 Message Waiting Indication (SS-MWI) **13**
7.3.25 Common Information (ANF-CMN) **13**
7.3.26 Call Priority Interruption (SS-CPI) **13**

7.4 Interworking considerations **13**
7.5 Overall SDL **13**

8 SS-CPI stage 2 specification **15**

© ISO/IEC 2003 – All rights reserved
Copyright International Organization for Standardization
Provided by IHS under license with ISO
No reproduction or networking permitted without license from IHS
Not for Resale

8.1 Functional model **15**

8.1.1 Functional model description **15**
8.1.2 Description of Functional Entities **15**
8.1.3 Relationship of functional model to basic call functional model **16**

8.2 Information flows **16**

8.2.1 Definition of information flows **16**
8.2.2 Relationship of information flows to basic call information flows **18**
8.2.3 Information flow sequences **18**

8.3 Functional Entity actions **21**

8.3.1 Actions of FE1 **21**
8.3.2 Actions of FE2 **21**
8.3.3 Actions of FE3 **22**
8.3.4 Actions of FE4 **22**
8.3.5 Actions of FE5 **22**

8.4 Functional entity behaviour **22**

8.4.1 Behaviour of FE1 **22**
8.4.2 Behaviour of FE2 **24**
8.4.3 Behaviour of FE3 **25**
8.4.4 Behaviour of FE4 **27**
8.4.5 Behaviour of FE5 **28**

8.5 Allocation of Functional Entities to physical equipment **29**
8.6 Interworking considerations **29**

9 SS-CPIP stage 2 specification **29**

9.1 Functional model **29**

9.1.1 Functional model description **29**
9.1.2 Description of Functional Entities **30**
9.1.3 Relationship of functional model to basic call functional model **30**

9.2 Information flows **31**

9.2.1 Definition of information flows **31**
9.2.2 Relationship of information flows to basic call information flows **32**
9.2.3 Information flow sequences **32**

9.3 Functional Entity actions **35**

9.3.1 Actions of FE1 **35**
9.3.2 Actions of FE2 **35**
9.3.3 Actions of FE3 **35**
9.3.4 Actions of FE4 **36**
9.3.5 Actions of FE5 **36**

9.4 Functional entity behaviour **36**

9.4.1 Behaviour of FE1 **37**
9.4.2 Behaviour of FE2 **38**
9.4.3 Behaviour of FE3 **39**
9.4.4 Behaviour of FE4 **40**
9.4.5 Behaviour of FE5 **41**

9.5 Allocation of Functional Entities to physical equipment **42**
9.6 Interworking considerations **42**

© ISO/IEC 2003 – All rights reserved

Copyright International Organization for Standardization
Provided by IHS under license with ISO
No reproduction or networking permitted without license from IHS
Not for Resale

Foreword

ISO (the International Organization for Standardization) and IEC (the International Electrotechnical Commission) form the specialized system for worldwide standardization. National bodies that are members of ISO or IEC participate in the development of International Standards through technical committees established by the respective organization to deal with particular fields of technical activity. ISO and IEC technical committees collaborate in fields of mutual interest. Other international organizations, governmental and non-governmental, in liaison with ISO and IEC, also take part in the work. In the field of information technology, ISO and IEC have established a joint technical committee, ISO/IEC JTC 1.

International Standards are drafted in accordance with the rules given in the ISO/IEC Directives, Part 2.

The main task of the joint technical committee is to prepare International Standards. Draft International Standards adopted by the joint technical committee are circulated to national bodies for voting. Publication as an International Standard requires approval by at least 75 % of the national bodies casting a vote.

Attention is drawn to the possibility that some of the elements of this document may be the subject of patent rights. ISO and IEC shall not be held responsible for identifying any or all such patent rights.

ISO/IEC 15991 was prepared by ECMA (as ECMA-263) and was adopted, under a special “fast-track procedure”, by Joint Technical Committee ISO/IEC JTC 1, *Information technology*, in parallel with its approval by national bodies of ISO and IEC.

This second edition cancels and replaces the first edition (ISO/IEC 15991:1998), which has been technically revised.

© ISO/IEC 2003 – All rights reserved
Copyright International Organization for Standardization
Provided by IHS under license with ISO
No reproduction or networking permitted without license from IHS
Not for Resale

Introduction

This International Standard is one of a series of Standards defining services and signalling protocols applicable to Private Integrated Services Networks (PISNs). The series uses ISDN concepts as developed by ITU-T and conforms to the framework of International Standards for Open Systems Interconnection as defined by ISO/IEC.

This International Standard specifies the Call Priority Interruption (CPI) and Call Priority Interruption Protection (CPIP) supplementary services.

This International Standard is based upon the practical experience of ECMA member companies and the results of their active and continuous participation in the work of ISO/IEC JTC 1, ITU-T, ETSI and other international and national standardization bodies. It represents a pragmatic and widely based consensus.

--`,,,`-`-`,,`,,`,`,,`---

© ISO/IEC 2003 – All rights reserved

Copyright International Organization for Standardization
Provided by IHS under license with ISO
No reproduction or networking permitted without license from IHS
Not for Resale

--`,,`-`-`,,`,,`,`,,`---

Copyright International Organization for Standardization
Provided by IHS under license with ISO
No reproduction or networking permitted without license from IHS

Not for Resale

Information technology — Telecommunications and information exchange between systems — Private Integrated Services Network — Specification, functional model and information flows — Call Priority Interruption and Call Priority Interruption Protection supplementary services

1 Scope

This International Standard specifies the Supplementary Services Call Priority Interruption (SS-CPI) and Call Priority Interruption Protection (SS-CPIP), which are applicable to various basic services supported by Private Integrated Services Networks (PISN). Basic services are specified in ISO/IEC 11574.

NOTE 1 - This edition of this International Standard does not apply to the circuit-mode Multiple Rate Bearer Service.

SS-CPI is a supplementary service that allows a call request for a priority call to proceed successfully in the case that there is no user information channel available. This is accomplished by force releasing an established call of lower priority.

SS-CPIP is a supplementary service that allows for the protection of calls against interruption from other, priority, calls.

SS-CPI and SS-CPIP are described separately because SS-CPI is a service used by a calling user, and SS-CPIP is a service used by either a calling user or a called user.

Supplementary service specifications are produced in three stages, according to the method described in ETS 300 387. This International Standard contains the stage 1 and stage 2 specifications of SS-CPI. The stage 1 specification (clause 6) specifies the general feature principles and capabilities. The stage 2 specification (clause 7) identifies the Functional Entities involved in the supplementary service and the information flows between them.

2 Conformance

In order to conform to this International Standard, a stage 3 standard shall specify signalling protocols and equipment behaviour that are capable of being used in a PISN which supports the supplementary service specified in this International Standard. This means that, to claim conformance, a stage 3 standard is required to be adequate for the support of those aspects of clause 6 (stage 1) and clause 7 (stage 2) which are relevant to the interface or equipment to which the stage 3 standard applies.

3 Normative references

The following referenced documents are indispensable for the application of this document. For dated references, only the edition cited applies. For undated references, the latest edition of the referenced document (including any amendments) applies.

ISO/IEC 11574:2000, *Information technology - Telecommunications and information exchange between systems - Private Integrated Services Network - Circuit-mode 64 kbit/s bearer services - Service description, functional capabilities and information flows*

ISO/IEC 11579-1:1994, *Information technology - Telecommunications and information exchange between systems - Private integrated services network - Part 1: Reference configuration for PISN Exchanges (PINX)*

ISO/IEC 13863:1998, *Information technology - Telecommunications and information exchange between systems - Private Integrated Services Network - Specification, functional model and information flows - Path replacement additional network feature*

ISO/IEC 13865:2003, *Information technology - Telecommunications and information exchange between systems - Private Integrated Services Network - Specification, functional model and information flows - Call Transfer supplementary service*

ISO/IEC 13866:1995, *Information technology - Telecommunications and information exchange between systems - Private Integrated Services Network - Specification, functional model and information flows - Call completion supplementary services*

ISO/IEC 13872:2003, *Information technology - Telecommunications and information exchange between systems - Private Integrated Services Network - Specification, functional model and information flows - Call Diversion supplementary services*

© ISO/IEC 2003 – All rights reserved

Copyright International Organization for Standardization
Provided by IHS under license with ISO
No reproduction or networking permitted without license from IHS
Not for Resale

ISO/IEC 15053:2003, *Information technology - Telecommunications and information exchange between systems - Private Integrated Services Network - Specification, functional model and information flows - Call Interception additional network feature*

ETS 300 387:1994, *Private Telecommunication Network (PTN); Method for the specification of basic and supplementary services*

ITU-T Rec. I.112:1993, *Vocabulary of terms for ISDNs*

ITU-T Rec. I.210:1993, *Principles of telecommunication services supported by an ISDN and the means to describe them*

ITU-T Rec. Z.100:1999, *Specification and description language (SDL)*

4 Terms and definitions

For the purposes of this document, the following terms and definitions apply.

4.1 External definitions

This International Standard uses the following terms defined in other documents:

- Basic service (ITU-T Rec. I.210)
- Private Integrated Services Network (PISN) (ISO/IEC 11579-1)
- Private Integrated services Network eXchange (PINX) (ISO/IEC 11579-1)
- Service (ITU-T Rec. I.112)
- Signalling (ITU-T Rec. I.112)
- Supplementary Service (ITU-T Rec. I.210)
- User (ISO/IEC 11574)

This International Standard refers to the following basic call Functional Entities (FE) defined in ISO/IEC 11574:

- Call Control (CC)
- Call Control Agent (CCA)

This International Standard refers to the following basic call inter-FE relationships defined in ISO/IEC 11574:

- r1
- r2
- r3

This International Standard refers to the following basic call information flows defined in ISO/IEC 11574:

- DISCONNECT request/indication
- RELEASE request/indication
- SETUP request/indication

4.2 Additional network feature

A capability, over and above that of a basic service, provided by a PISN, but not directly to a PISN user.

4.3 Call, Basic call

An instance of the use of a basic service.

4.4 Call Priority Interruption Capability Level (CPICL)

A parameter indicating the priority of a call.

4.5 Call Priority Interruption Protection Level (CPIPL)

A parameter indicating a level of protection of a call against interruption from other calls.

© ISO/IEC 2003 – All rights reserved
Copyright International Organization for Standardization
Provided by IHS under license with ISO
No reproduction or networking permitted without license from IHS
Not for Resale

4.6 Established call

The active call that is selected for interruption.

4.7 Impending priority interruption state

The condition of an established call and a priority call after provision of an Impending priority interruption warning notification and before the release of the established call.

4.8 Impending priority interruption warning notification

A notification provided before the release of the established call.

4.9 Non-priority call

A call that has not been assigned a CPICL value.

4.10 Priority call

A call that has a CPICL value greater than zero.

NOTE 2 - A priority call may also be a protected call.

4.11 Protected call

A call that has a CPIPL value greater than zero.

NOTE 3 - A protected call may also be a priority call.

4.12 Served user

The user who requests SS-CPI and/or SS-CPIP.

4.13 Time to priority interruption

The duration of the impending priority interruption state.

4.14 Unprotected call

A call which has not been assigned a CPIPL value or has a CPIPL value equal to zero.

5 List of acronyms

ANF	Additional Network Feature
AOC	Advice Of Charge
CC	Call Control (Functional Entity)
CCA	Call Control Agent (Functional Entity)
CCBS	Call Completion to Busy Subscriber
CCNR	Call Completion on No Reply
CD	Call Deflection
CFB	Call Forwarding Busy
CFNR	Call Forwarding No Reply
CFU	Call Forwarding Unconditional
CI	Call Intrusion
CICL	Call Intrusion Capability Level
CINT	Call INTerception
CLIP	Calling Line Identification Presentation
CLIR	Calling/Connected Line Identification Restriction
CMN	CoMmoN Information
CNIP	Calling Name Identification Presentation
CNIR	Calling/Connected Name Identification Restriction
CO	Call Offer
COLP	Connected Line Identification Presentation
CONP	Connected Name Identification Presentation
CPI	Call Priority Interruption
CPICL	Call Priority Interruption Capability Level
CPIP	Call Priority Interruption Protection
CPIPL	Call Priority Interruption Protection Level
CT	Call Transfer

© ISO/IEC 2003 – All rights reserved

Copyright International Organization for Standardization
Provided by IHS under license with ISO
No reproduction or networking permitted without license from IHS
Not for Resale

DND	Do Not Disturb
DNDO	Do Not Disturb Override
FE	Functional Entity
ISDN	Integrated Services Digital Network
MWI	Message Waiting Indication
PINX	Private Integrated services Network eXchange
PISN	Private Integrated Services Network
PR	Path Replacement
RE	REcall
SDL	Specification and Description Language
SS	Supplementary Service
TC	Transit Counter
TE	Terminal Equipment
WTAU	Wireless Terminal AUthentication
WTLR	Wireless Terminal Location Registration
WTMI	Wireless Terminal Mobility Incoming call
WTMO	Wireless Terminal Mobility Outgoing call

6 SS-CPI stage 1 specification

6.1 Description

6.1.1 General description

Call Priority Interruption (SS-CPI) is a supplementary service that allows a call request for a priority call to proceed successfully in the case that there is no user information channel available.

A priority interruption only occurs if the served user has a higher Call Priority Interruption Capability Level (CPICL) than the Call Priority Interruption Protection Level (CPIPL) of at least one of the active calls on the selected route.

6.1.2 Qualifications on applicability to telecommunication services

SS-CPI is applicable to all basic services defined in ISO/IEC 11574.

6.2 Procedure

6.2.1 Provision/withdrawal

SS-CPI shall be provided or withdrawn after pre-arrangement with the service provider.

SS-CPI shall be provided on a per PISN number basis for one or more basic services.

One or more Call Priority Interruption Capability Levels (CPICL) shall be allocated to the served user. The procedure by which CPICL is allocated is outside the scope of this International Standard.

CPICL shall have a value in the range 1 (lowest priority) to 3 (highest priority). An implementation may offer one or more CPICL values.

NOTE 4 - It is not precluded that CPICL values can be variable, e. g. a user may have the possibility to change the value with a user procedure. The details of such capabilities are outside the scope of this International Standard.

At least one of the methods of invoking SS-CPI (see 6.2.2.2) shall be offered.

6.2.2 Normal procedures

6.2.2.1 Activation/deactivation/registration/interrogation

SS-CPI shall be activated upon provision and deactivated upon withdrawal.

Registration and interrogation shall not apply.

6.2.2.2 Invocation and operation

There are two different ways to invoke SS-CPI. A PISN may offer one or both of these ways.

These are:

i) Consultation: the served user, on being informed that a call has failed because of congestion en route to the destination, shall be able, within a defined period (consultation timer), to request SS-CPI.

© ISO/IEC 2003 – All rights reserved
Copyright International Organization for Standardization
Provided by IHS under license with ISO
No reproduction or networking permitted without license from IHS
Not for Resale

ii) Immediate invocation: the served user shall be able to request SS-CPI as part of the initial call set-up, or as an implementation option, the network can invoke SS-CPI automatically on behalf of the user.

On invocation, CPICL, if provided, shall be assigned one of the offered values.

NOTE 5 - As an example, this assignment may be based on a class of service.

6.2.2.2.1 Verification and selection of an established call

If the consultation method is provided to the served user, the following procedure shall apply. If a call fails due to congestion en route to the destination and the PISN is not aware that call priority interruption is not allowed (e. g. because of insufficient CPICL), the PISN shall notify the served user that the call has failed because of congestion and that priority interruption may be possible. The served user may then request SS-CPI.

If the immediate invocation method is provided to the served user, the served user may request SS-CPI with the initial call set-up.

For both invocation alternatives the following shall apply. Upon receiving a call priority interruption request, the PISN shall check that at least one user information channel is available on the selected route.

If a user information channel is available on the selected route, the call shall proceed in accordance with basic call procedures.

If no user information channel is available on the selected route, and in order to determine that interruption is allowed, the PISN shall check that the CPICL value of the received call request is greater than zero (priority call). It shall then check that the Call Priority Interruption Protection Level (CPIPL) value of an active call on the selected route is lower than the CPICL value of the served user. If the PISN does not have knowledge of the CPIPL value of an active call, this call shall be treated as if the call has no protection (i.e. CPIPL value equal to zero).

NOTE 6 - CPIPL values are allocated when SS-CPIP is invoked. See 7.2.2.2.

The call that passes these checks shall be selected as the established call. If more than one call passes these checks, the PISN shall select the active call with the lowest CPIPL value as the established call. If more than one call has the same lowest CPIPL, the method used to select the established call from this group of calls shall be implementation dependent. If no active call passes these checks the priority call request may be rejected or some other implementation dependent action may be taken.

NOTE 7 - One example of an implementation dependent action is to establish the call on another route, if such a route is available.

When the established call has been selected, the users in the established call may as an option be provided with an Impending priority interruption warning notification and a short delay before the user connection is broken. If this notification is provided, it shall be sent to the users in the established call and the impending priority interruption state shall be entered.

NOTE 8 - The Impending priority interruption warning notification can be accompanied by an in-band tone or announcement to all users in the established call.

SS-CPI shall terminate when the call request reaches its destination or leaves the PISN.

6.2.2.2.2 Actions during impending priority interruption state

6.2.2.2.2.1 Impending priority interruption state ends

A time period, time to priority interruption (1-10 seconds as an implementation option), after the Impending priority interruption warning notification has been provided, the users involved in the established call shall be notified of the forced release. The impending priority interruption state shall be terminated, the established call shall be released and the priority call request shall proceed in accordance with basic call procedures selecting the newly available user information channel.

6.2.2.2.2.2 Release of priority call request

If the priority call request is released by the served user during the impending priority interruption state, the users involved in the established call shall be notified that the priority interruption request has been terminated and SS-CPI shall be terminated.

6.2.2.2.2.3 Release of established call

If the established call is released by a user during the impending priority interruption state, the priority call request shall proceed in accordance with basic call procedures selecting the newly available user information channel.

6.2.2.2.2.4 User information channel becomes available

If another user information channel becomes available for this call during the impending priority interruption state, the users involved in the established call shall be notified that the impending priority interruption state has been terminated. The priority call request shall proceed in accordance with basic call procedures selecting the newly available user information channel.

© ISO/IEC 2003 – All rights reserved

Copyright International Organization for Standardization
Provided by IHS under license with ISO
No reproduction or networking permitted without license from IHS
Not for Resale

6.2.3 Exceptional procedures

6.2.3.1 Activation/deactivation/registration/interrogation

Not applicable.

6.2.3.2 Invocation and operation

If the interruption request cannot be accepted the request shall be ignored.

6.3 Interaction with other supplementary services and ANFs

Interactions with other supplementary services and ANFs for which PISN standards were available at the time of publication of this International Standard are specified below.

6.3.1 Calling Name Identification Presentation (SS-CNIP)

No interaction.

6.3.2 Connected Name Identification Presentation (SS-CONP)

No interaction.

6.3.3 Completion of Call to Busy Subscriber (SS-CCBS)

SS-CPI may apply to a call resulting from the use of SS-CCBS.

6.3.4 Completion of Call on No Reply (SS-CCNR)

SS-CPI may apply to a call resulting from the use of SS-CCNR.

6.3.5 Call Transfer (SS-CT)

SS-CPI shall not be invoked to interrupt other calls during establishment of the new connection.

6.3.6 Call Forwarding Unconditional (SS-CFU)

SS-CPI may be invoked when establishing the diverted call.

6.3.7 Call Forwarding Busy (SS-CFB)

SS-CPI may be invoked when establishing the diverted call.

6.3.8 Call Forwarding No Reply (SS-CFNR)

SS-CPI may be invoked when establishing the diverted call.

6.3.9 Call Deflection (SS-CD)

SS-CPI may be invoked when establishing the diverted call.

6.3.10 Path Replacement (ANF-PR)

SS-CPI shall not be invoked to interrupt other calls during establishment of the new connection.

6.3.11 Call Offer (SS-CO)

No interaction.

6.3.12 Call Intrusion (SS-CI)

No interaction.

NOTE 9 - SS-CI may be used in conjunction with SS-CPI to provide for intrusion if a called user busy condition is determined.

6.3.13 Do not Disturb (SS-DND)

No interaction.

6.3.14 Do not Disturb Override (SS-DNDO)

No interaction.

6.3.15 Advice of Charge (SS-AOC)

No interaction.

6.3.16 Recall (SS-RE)

No interaction.

© ISO/IEC 2003 – All rights reserved
Copyright International Organization for Standardization
Provided by IHS under license with ISO
No reproduction or networking permitted without license from IHS
Not for Resale

6.3.17 Call Interception (ANF-CINT)

A SS-CPI request shall have priority over any ANF-CINT request on a network congestion condition. There is no interaction with ANF-CINT for other invocation conditions.

6.3.18 Transit Counter (ANF-TC)

No interaction.

6.3.19 Interaction with Wireless Terminal Location Registration (SS-WTLR)

No interaction.

6.3.20 Interaction with Wireless Terminal Incoming Call (ANF-WTMI)

SS-CPI may be invoked when establishing a call to a WTM user.

6.3.21 Interaction with Wireless Terminal Outgoing Call (ANF-WTMO)

No interaction.

6.3.22 Interaction with Wireless Terminal Authentication of a WTM user (SS-WTAT)

No interaction.

6.3.23 Interaction with Wireless Terminal Authentication of a PISN (SS-WTAN)

No interaction.

6.3.24 Message Waiting Indication (SS-MWI)

No interaction.

6.3.25 Common Information (ANF-CMN)

No interaction.

6.3.26 Call Priority Interruption Protection (SS-CPIP)

See 6.2.

6.4 Interworking considerations

When interworking with another network which supports an equivalent feature, it may be possible to cooperate with the other network to provide SS-CPI.

6.5 Overall SDL

Figure 1 contains the dynamic description of SS-CPI using the Specification and Description Language (SDL) defined in ITU-T Rec. Z.100 (1999). The SDL process represents the behaviour of the PISN in providing SS-CPI to a served user.

Input symbols from the left and output symbols to the left represent primitives from and to the served user.

Input symbols from the right represent inputs from the basic call process or inputs from an internal process.

Output symbols to the right represent primitives to the users in the established call, outputs to the basic call process or outputs to an internal process.

--`,,`-`-`,,`,,`,`,,`---

© ISO/IEC 2003 – All rights reserved

Copyright International Organization for Standardization
Provided by IHS under license with ISO
No reproduction or networking permitted without license from IHS
Not for Resale

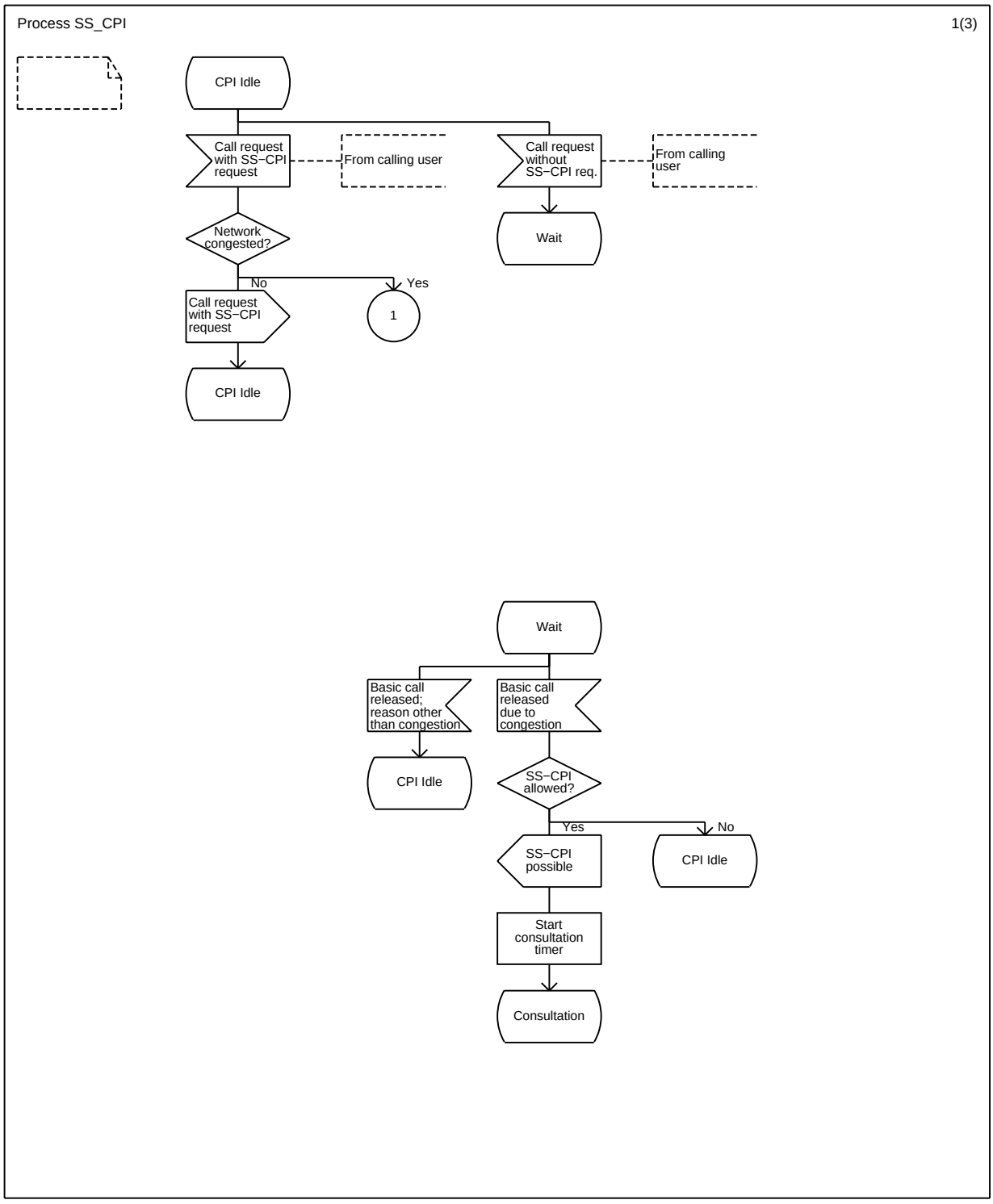

Figure 1 - SS-CPI, overall SDL - Part 1 of 3

© ISO/IEC 2003 – All rights reserved
Copyright International Organization for Standardization
Provided by IHS under license with ISO
No reproduction or networking permitted without license from IHS
Not for Resale

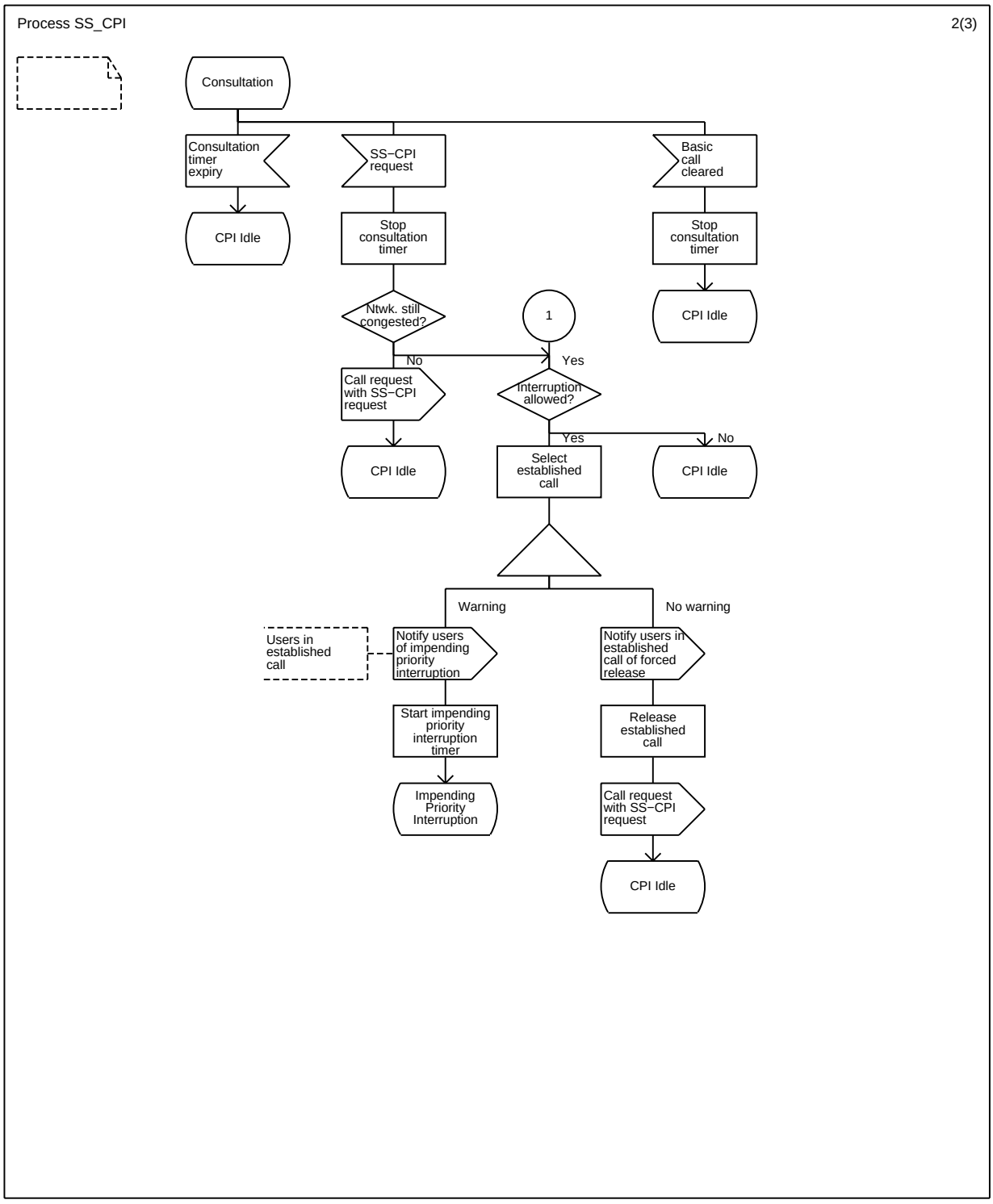

Figure 1 - SS-CPI, overall SDL - Part 2 of 3

© ISO/IEC 2003 – All rights reserved
Copyright International Organization for Standardization
Provided by IHS under license with ISO
No reproduction or networking permitted without license from IHS
Not for Resale

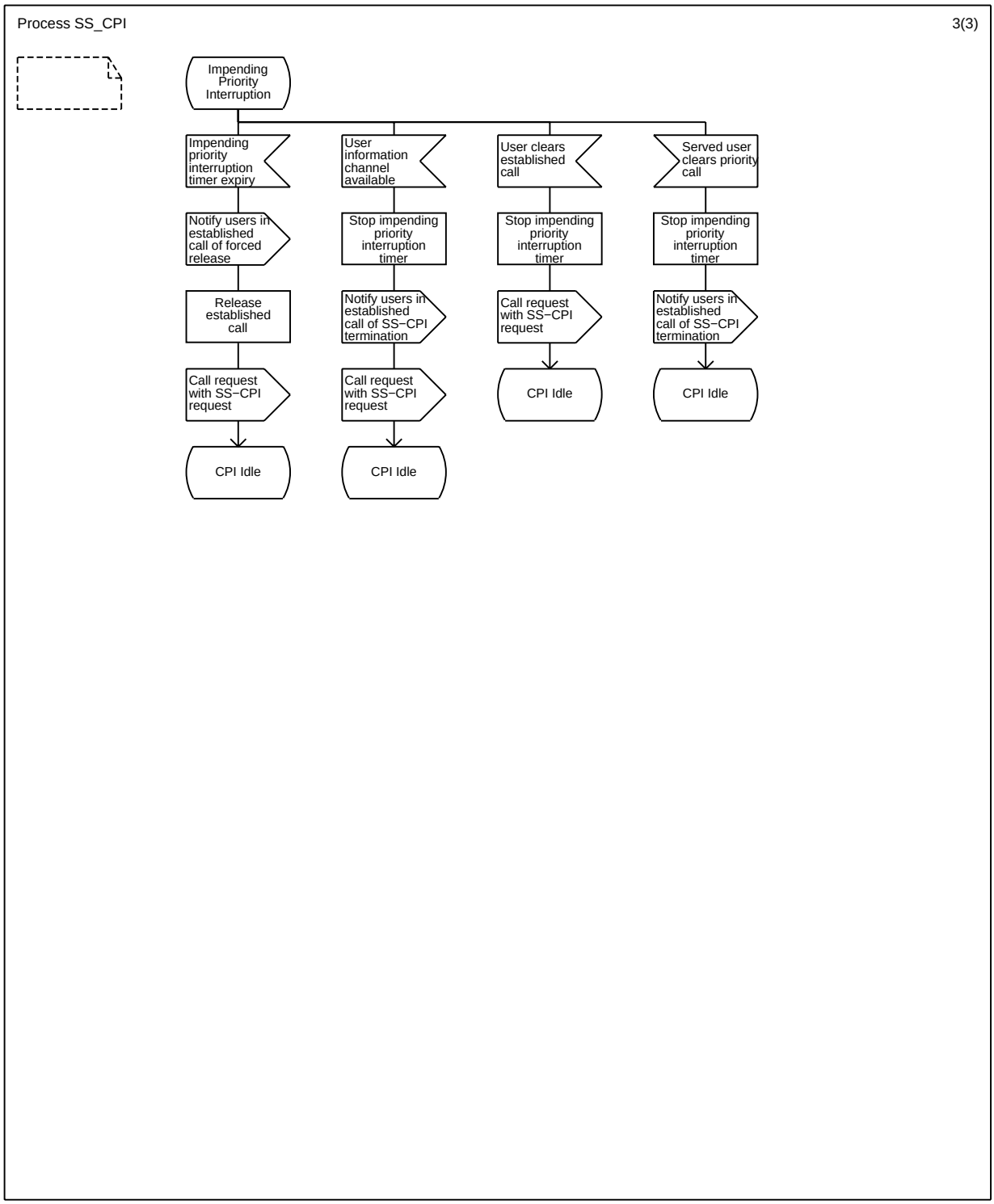

Figure 1 - SS-CPI, overall SDL - Part 3 of 3

© ISO/IEC 2003 – All rights reserved
Copyright International Organization for Standardization
Provided by IHS under license with ISO
No reproduction or networking permitted without license from IHS
Not for Resale

7 SS-CPIP stage 1 specification

7.1 Description

7.1.1 General description

Call Priority Interruption Protection (SS-CPIP) is a supplementary service that allows for the protection of calls against interruption.

The served user may be either a calling user or a called user.

7.1.2 Qualifications on applicability to telecommunication services

SS-CPIP is applicable to all basic services defined in ISO/IEC 11574.

7.2 Procedure

7.2.1 Provision/withdrawal

SS-CPIP shall be provided or withdrawn after pre-arrangement with the service provider.

SS-CPIP shall be provided on a per PISN number basis for one or more basic services.

One or more Call Priority Interruption Protection Levels (CPIPL) shall be allocated to the served user. CPIPLs may be allocated to gateways to other networks for use on behalf of users outside the PISN. Where no CPIPL is allocated a default value of zero (no protection) shall be assumed. The procedure by which CPIPL is allocated is outside the scope of this International Standard.

CPIPL shall have a value in the range 0 (no protection) to 3 (total protection). CPIPL values 0 and 3 shall be offered, and as an implementation option values 1 and 2 may be offered.

NOTE 10 - It is not precluded that CPIPL values can be variable, e.g., a user may have the possibility to change the value with a user procedure. The details of such capabilities are outside the scope of this International Standard.

7.2.2 Normal procedures

7.2.2.1 Activation/deactivation/registration/interrogation

SS-CPIP shall be activated upon provision and deactivated upon withdrawal.

Registration and interrogation shall not apply.

7.2.2.2 Invocation and operation

SS-CPIP may be invoked by a calling user or by a called user to assign a protection level (CPIPL) to a call. As an implementation option, the network can invoke SS-CPIP automatically on behalf of the served user.

On invocation, a protection level (CPIPL), chosen from the offered values, shall be assigned to the call.

NOTE 11 - As an example, this assignment may be based on a class of service.

Where both the calling user and the called user invoke SS-CPIP for the same call, the CPIPL of the call shall be assigned the higher of the values requested.

The CPIPL shall be stored by the network for the lifetime of the call.

7.2.2.2.1 Invocation by a calling user

The calling user shall be able to request SS-CPIP as part of the initial call set-up.

Following the receipt of a call priority protection request, the PISN shall pass on the received CPIPL unchanged towards the call destination.

7.2.2.2.2 Invocation by a called user

The called user shall be able to request SS-CPIP for protection when confirming a call set-up request, to indicate a higher protection level than that associated with the incoming call. This request may be made regardless of whether, or not, the calling user invoked SS-CPIP.

Following the receipt of a call priority protection request which requests a higher protection level, the PISN shall pass on the received CPIPL unchanged towards the origin of the call.

© ISO/IEC 2003 – All rights reserved

Copyright International Organization for Standardization
Provided by IHS under license with ISO
No reproduction or networking permitted without license from IHS
Not for Resale

7.2.3 Exceptional procedures

7.2.3.1 Activation/deactivation/registration/interrogation

Not applicable.

7.2.3.2 Invocation and operation

If the protection request cannot be accepted the request shall be ignored.

7.3 Interaction with other supplementary services and ANFs

Interactions with other supplementary services and ANFs for which PISN standards were available at the time of publication of this International Standard are specified below.

7.3.1 Calling Name Identification Presentation (SS-CNIP)

No interaction.

7.3.2 Connected Name Identification Presentation (SS-CONP)

No interaction.

7.3.3 Completion of Call to Busy Subscriber (SS-CCBS)

SS-CPIP may apply to a call resulting from the use of SS-CCBS.

7.3.4 Completion of Call on No Reply (SS-CCNR)

SS-CPIP may apply to a call resulting from the use of SS-CCNR.

7.3.5 Call Transfer (SS-CT)

When call transfer is invoked the resulting call shall assume the highest of the protection levels of the two calls involved.

7.3.6 Call Forwarding Unconditional (SS-CFU)

SS-CPIP may be invoked when establishing the diverted call. The forwarded-to user may indicate that a higher protection level is required on the resulting call.

7.3.7 Call Forwarding Busy (SS-CFB)

SS-CPIP may be invoked when establishing the diverted call. The forwarded-to user may indicate that a higher protection level is required on the resulting call.

7.3.8 Call Forwarding No Reply (SS-CFNR)

SS-CPIP may be invoked when establishing the diverted call. The forwarded-to user may indicate that a higher protection level is required on the resulting call.

7.3.9 Call Deflection (SS-CD)

SS-CPIP may be invoked when establishing the diverted call. The deflected-to user may indicate that a higher protection level is required on the resulting call.

7.3.10 Path Replacement (ANF-PR)

SS-CPIP may be invoked when establishing the new connection so that the new connection has the same protection level as the old one.

7.3.11 Call Offer (SS-CO)

No interaction.

7.3.12 Call Intrusion (SS-CI)

No interaction.

7.3.13 Do not Disturb (SS-DND)

No interaction.

7.3.14 Do not Disturb Override (SS-DNDO)

No interaction.

7.3.15 Advice of Charge (SS-AOC)

No interaction.

© ISO/IEC 2003 – All rights reserved
Copyright International Organization for Standardization
Provided by IHS under license with ISO
No reproduction or networking permitted without license from IHS
Not for Resale

7.3.16 Recall (SS-RE)

No interaction.

7.3.17 Call Interception (ANF-CINT)

SS-CPIP may be invoked when establishing the intercepted call. The intercepted-to user may indicate that a higher protection level is required on the resulting call.

7.3.18 Transit Counter (ANF-TC)

No interaction.

7.3.19 Interaction with Wireless Terminal Location Registration (SS-WTLR)

No interaction.

7.3.20 Interaction with Wireless Terminal Incoming Call (ANF-WTMI)

SS-CPIP may be invoked when establishing a call to a WTM user.

7.3.21 Interaction with Wireless Terminal Outgoing Call (ANF-WTMO)

No interaction.

7.3.22 Interaction with Wireless Terminal Authentication of a WTM user (SS-WTAT)

No interaction.

7.3.23 Interaction with Wireless Terminal Authentication of a PISN (SS-WTAN)

No interaction.

7.3.24 Message Waiting Indication (SS-MWI)

No interaction.

7.3.25 Common Information (ANF-CMN)

No interaction.

7.3.26 Call Priority Interruption (SS-CPI)

See 6.2.

7.4 Interworking considerations

When interworking with another network which supports an equivalent feature, it may be possible to cooperate with the other network to provide SS-CPIP.

7.5 Overall SDL

Figure 2 contains the dynamic description of SS-CPIP using the Specification and Description Language (SDL) defined in ITU-T Rec. Z.100 (1999). The SDL process represents the behaviour of the PISN in providing SS-CPIP to a served user.

Input symbols from the left represent primitives from the served user.

Output symbols to the right represent primitives to the basic call process.

© ISO/IEC 2003 – All rights reserved

Copyright International Organization for Standardization
Provided by IHS under license with ISO
No reproduction or networking permitted without license from IHS
Not for Resale

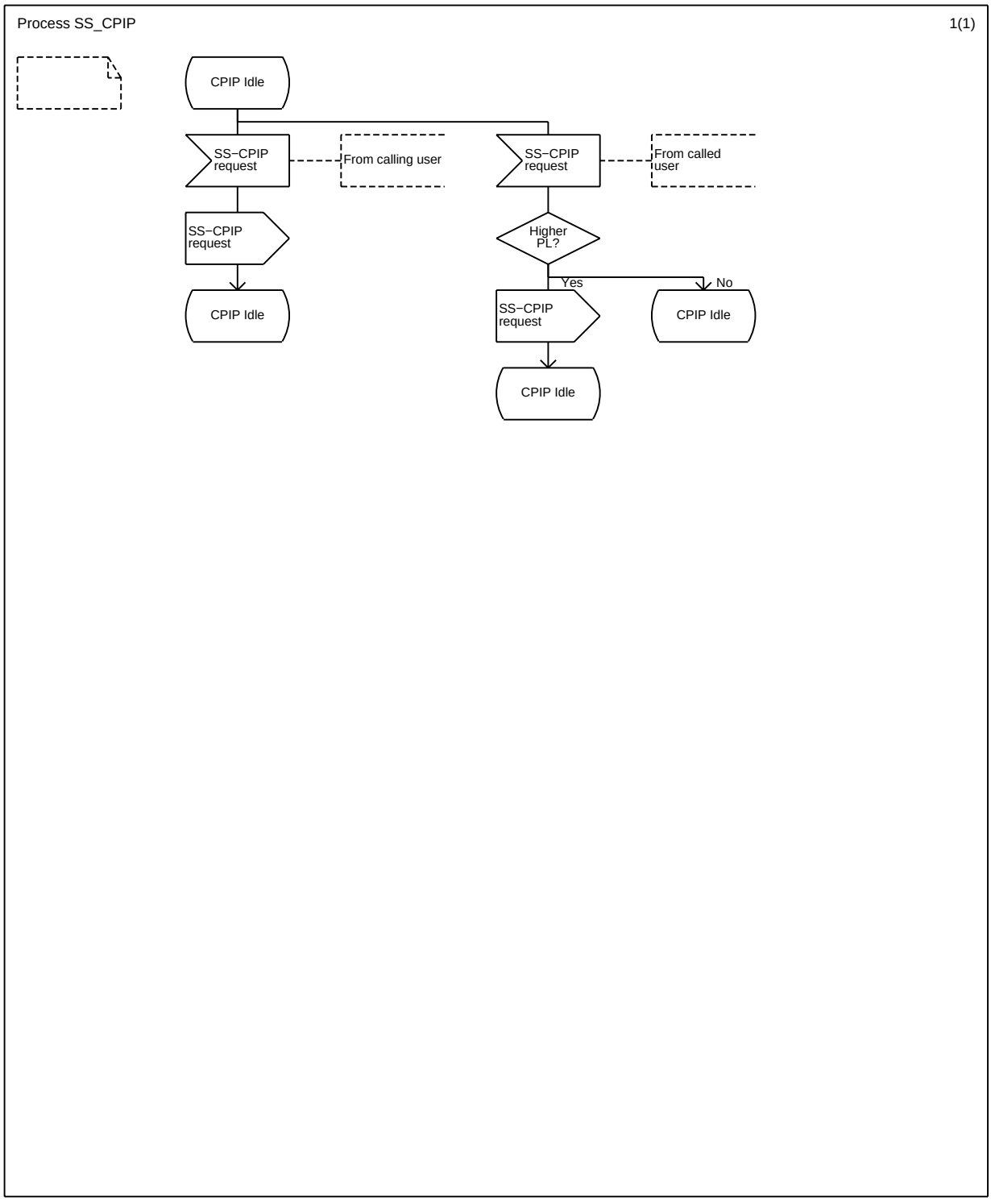

Figure 2 - SS-CPIP, overall SDL

© ISO/IEC 2003 – All rights reserved
Copyright International Organization for Standardization
Provided by IHS under license with ISO
No reproduction or networking permitted without license from IHS
Not for Resale

8 SS-CPI stage 2 specification

8.1 Functional model

8.1.1 Functional model description

The functional model shall comprise the following Functional Entities (FE):

FE1 Served user agent;

FE2 Served user's control entity;

FE3 SS-CPI detection and execution entity;

FE4 Established call user's control entity;

FE5 Established call user's agent.

The following functional relationships shall exist between these FEs:

ra between FE1 and FE2;

rb between FE2 and FE3 and between a pair of FE3s;

rc between FE3 and FE4s;

rd between FE4 and FE5;

Figure 3 shows these FEs and relationships.

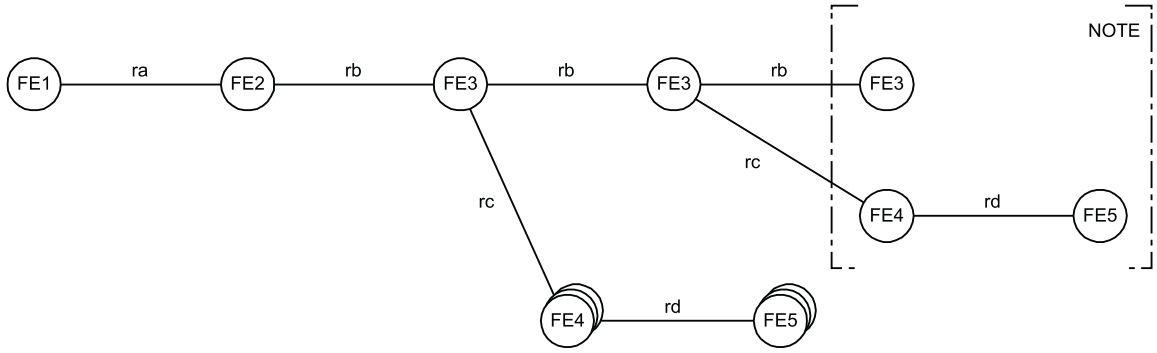

NOTE - Functional entities shown within square brackets repeat as necessary. There is one FE4 and FE5 per user (usually two) in the established call.

Figure 3 - Functional model for SS-CPI

8.1.2 Description of Functional Entities

8.1.2.1 Served user agent, FE1

This functional entity:

- receives requests from the served user and passes these on to FE2;
- receives information from FE2 and passes it on to the served user.

8.1.2.2 Served user's control entity, FE2

This functional entity:

- at the time of original basic call r1_SETUP-request/indication:
  - receives and validates request from FE1 for immediate invocation of SS-CPI;
  - determines if immediate invocation or consultation is applicable for the call;
  - if SS-CPI is applicable for the call, sends an immediate invocation request to FE3 at the time of the original basic call r2_SETUP-request/indication;

© ISO/IEC 2003 – All rights reserved

Copyright International Organization for Standardization
Provided by IHS under license with ISO
No reproduction or networking permitted without license from IHS
Not for Resale

- if consultation applies to the call and all conditions for performing consultation are met:
  - informs FE1 that the original call has encountered congestion and that SS-CPI may be requested;
  - limits the length of the consultation by clearing the call if the served user has not responded, by clearing the call or requesting SS-CPI, within the consultation time;
  - receives request, during consultation, from FE1 for invocation of SS-CPI and sends an appropriate SS-CPI invocation request to FE3.

8.1.2.3 SS-CPI detection and execution entity, FE3

This functional entity:

- on an incoming call with a SS-CPI request checks:
  - for available resources on the selected route;
  - if the necessary resources are not available, optionally sends notifications, releases the established call with the lowest priority (see also 6.2.2.2.1);
  - establishes the priority call by sending an invocation request to the next FE3 at the time of the original basic call r2_SETUP-request/indication.

8.1.2.4 Established call user's control entity, FE4

This functional entity:

- receives information flows from FE3 and forwards these to FE5.

8.1.2.5 Established call user's agent, FE5

This functional entity:

- receives information flows from FE4 and informs the user.

8.1.3 Relationship of functional model to basic call functional model

An example of a relationship between the FEs for SS-CPI and the FEs for the basic call is shown in figure 4.

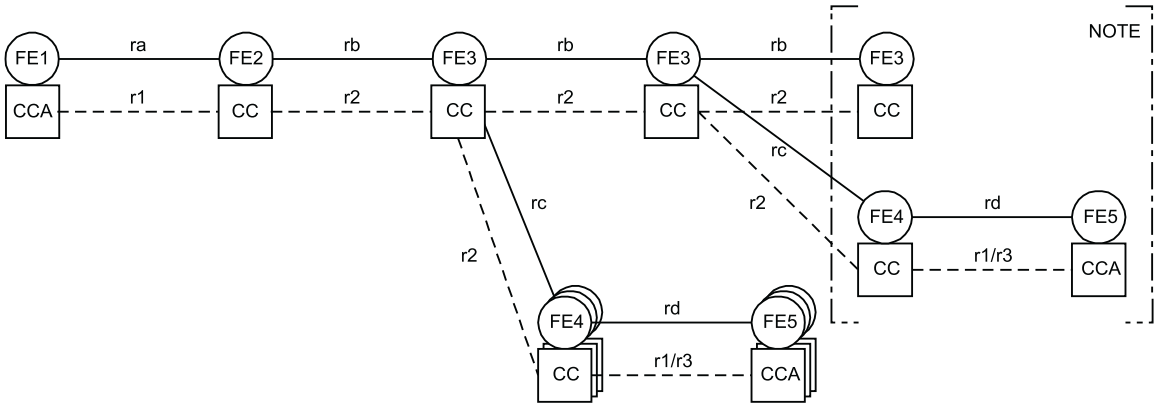

NOTE - Functional entities shown within square brackets repeat as necessary. There is one FE4 and FE5 per user (usually two) in the established call.

Figure 4 - Example relationship between the model for SS-CPI and basic call

8.2 Information flows

8.2.1 Definition of information flows

In the tables listing the elements in information flows, the column headed "Request" indicates which of these elements are mandatory (M) and which are optional (O) in a request/indication information.

© ISO/IEC 2003 – All rights reserved
Copyright International Organization for Standardization
Provided by IHS under license with ISO
No reproduction or networking permitted without license from IHS
Not for Resale

8.2.1.1 Relationship ra

8.2.1.1.1 ra_INFORM

ra_INFORM is an unconfirmed information flow sent across ra from FE2 to FE1. It is used to inform FE1 that congestion has been encountered and that SS-CPI may be requested. There are no elements within the ra_INFORM information flow.

8.2.1.1.2 ra_CPI_INV

ra_CPI_INV is an unconfirmed information flow sent across ra from FE1 to FE2. It is used to invoke priority interruption.

Table 1 lists the elements within the ra_CPI_INV information flow.

Table 1 - Content of ra_CPI_INV

Element	Request
CPICL	O (NOTE 12)

NOTE 12 - Between FE1 and FE2 this element may be omitted in the case that the served user does not have the capability to change or select CPICL. This element shall be included if and only if interruption is invoked. This element shall have a value in the range 1 (lowest priority) to 3 (highest priority).

8.2.1.2 Relationship rb

8.2.1.2.1 rb_CPI_INV

rb_CPI_INV is an unconfirmed information flow sent across rb from FE2 to FE3, and from FE3 to a subsequent FE3. It is used to invoke priority interruption.

Table 2 lists the elements within the rb_CPI_INV information flow.

Table 2 - Content of rb_CPI_INV

Element	Request
CPICL	M (NOTE 13)

NOTE 13 - This element shall have a value in the range 1 (lowest priority) to 3 (highest priority).

8.2.1.3 Relationship rc

8.2.1.3.1 rc_CPI_TERM

rc_CPI_TERM is an unconfirmed information flow sent across rc from FE3 to each FE4. It is used to inform FE4 that the impending priority interruption state has been terminated. There are no elements within the rc_CPI_TERM information flow.

8.2.1.3.2 rc_CPI_WARN

rc_CPI_WARN is an unconfirmed information flow sent across rc from FE3 to each FE4. It is used to inform FE4 that priority interruption is impending. There are no elements within the rc_CPI_WARN information flow.

8.2.1.3.3 rc_FORCED_REL

rc_FORCED_REL is an unconfirmed information flow sent across rc from FE3 to FE4. It is used to inform FE4 that its associated user has been force released. There are no elements within the rc_FORCED_REL information flow.

8.2.1.4 Relationship rd

8.2.1.4.1 rd_CPI_TERM

rd_CPI_TERM is an unconfirmed information flow sent across rd from FE4 to FE5. It is used to inform FE5 that the impending priority interruption state has been terminated. There are no elements within the rd_CPI_TERM information flow.

8.2.1.4.2 rd_CPI_WARN

rd_CPI_WARN is an unconfirmed information flow sent across rd from FE4 to FE5. It is used to inform FE5 that priority interruption is impending. There are no elements within the rd_CPI_WARN information flow.

© ISO/IEC 2003 – All rights reserved

Copyright International Organization for Standardization
Provided by IHS under license with ISO
No reproduction or networking permitted without license from IHS
Not for Resale

8.2.1.4.3 rd_FORCED_REL

rd_FORCED_REL is an unconfirmed information flow sent across rd from FE4 to FE5. It is used to inform FE5 that its associated user has been force released. There are no elements within the rd_FORCED_REL information flow.

8.2.2 Relationship of information flows to basic call information flows

Table 3 summarises the relationships of the SS-CPI information flows with those of the basic call.

Table 3 - Relationship of the SS-CPI information flows with the basic call

Information flow			Independent of basic call flow	With basic call flow	Basic call flows
ra	ra_INFORM	request	yes	no	
	ra_CPI_INV	request	yes	yes	r1_SETUP req/ind
rb	rb_CPI_INV	request	no	yes	r2_SETUP req/ind
rc	rc_CPI_TERM	request	yes	no	
	rc_CPI_WARN	request	yes	no	
	rc_FORCED_REL	request	no	yes	r2_RELEASE req/ind
rd	rd_CPI_TERM	request	yes	no	
	rd_CPI_WARN	request	yes	no	
	rd_FORCED_REL	request	no	yes	r1/r3_DISCONNECT req/ind

8.2.3 Information flow sequences

A stage 3 standard for SS-CPI shall provide signalling procedures in support of the information flow sequences specified below. In addition, signalling procedures should be provided to cover other sequences arising from error situations, interactions with basic call, interactions with other supplementary services, different topologies, etc.

In the figures, SS-CPI information flows are represented by solid arrows and basic call information flows are represented by broken arrows. An ellipse embracing two information flows indicates that the two information flows occur simultaneously. Within a column representing a SS-CPI functional entity, the numbers refer to functional entity actions listed in 8.3.

The following abbreviations are used:

req request;

ind indication.

The following timers are used:

T1 Consultation timer;

T2 Impending priority interruption timer.

--`,,,`-`-`,,`,,`,`,,`---

© ISO/IEC 2003 – All rights reserved
Copyright International Organization for Standardization
Provided by IHS under license with ISO
No reproduction or networking permitted without license from IHS
Not for Resale

8.2.3.1 Normal operation, consultation

Figure 5 shows the information flow sequence for a successful priority interruption attempt using consultation.

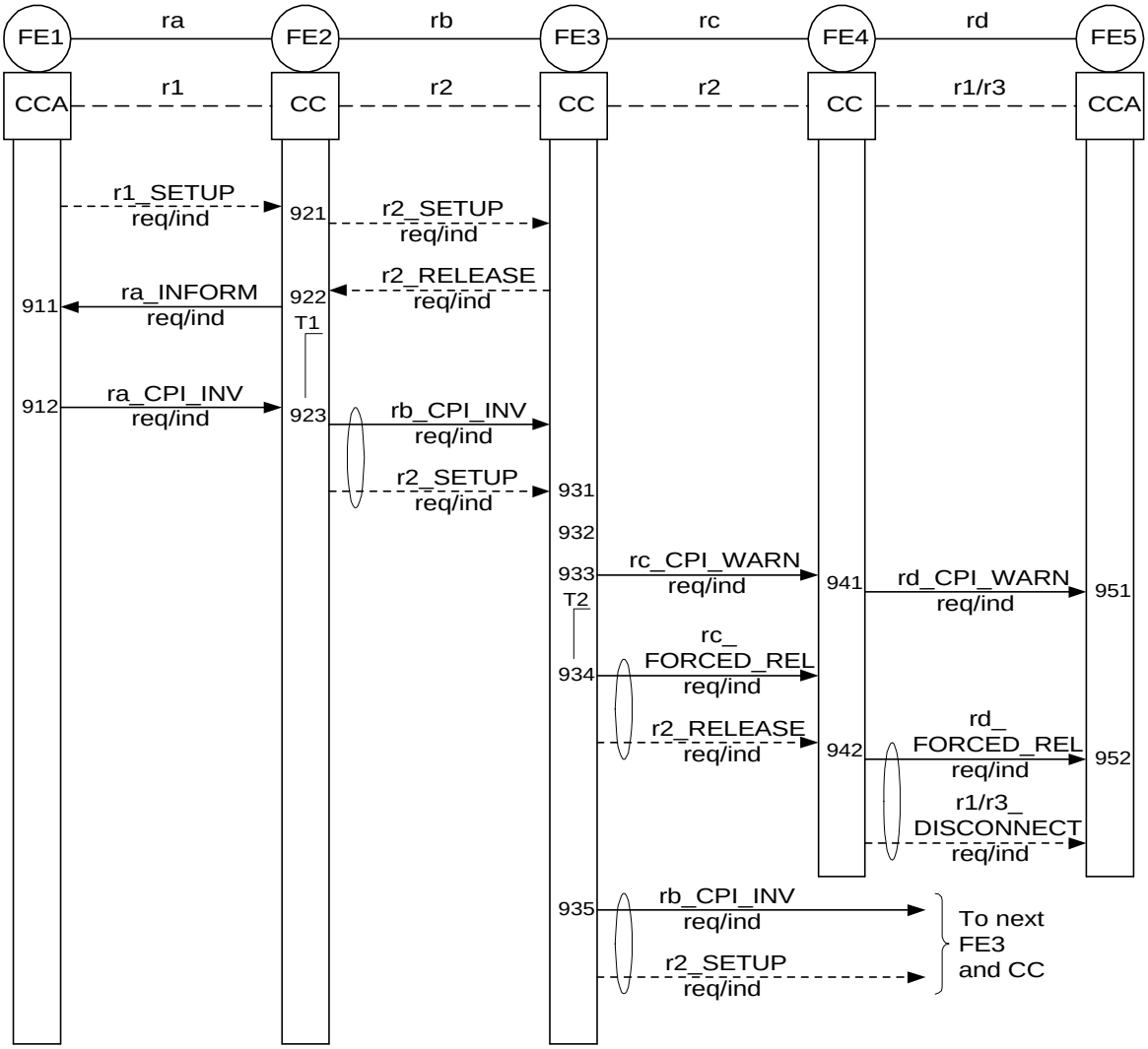

Figure 5 - Information flow sequence for SS-CPI - normal operation, consultation

© ISO/IEC 2003 – All rights reserved
Copyright International Organization for Standardization
Provided by IHS under license with ISO
No reproduction or networking permitted without license from IHS
Not for Resale

8.2.3.2 Normal operation, immediate invocation

Figure 6 shows the information flow sequence for a successful priority interruption attempt using immediate invocation.

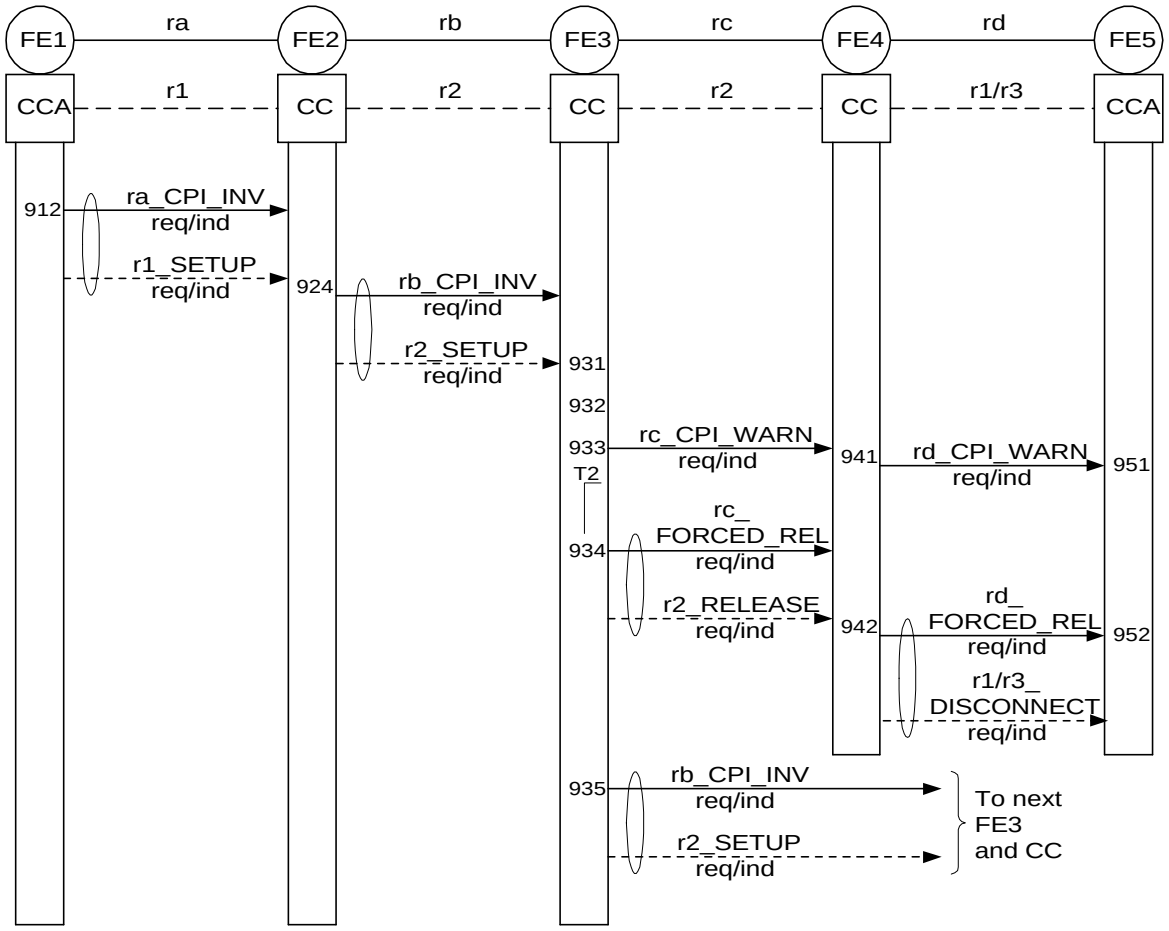

Figure 6 - Information flow sequence for SS-CPI - normal operation, immediate invocation

8.2.3.3 Normal operation, served user releases the priority call

Figure 7 shows the information flow sequence when the priority call is released by the served user during the impending priority interruption state.

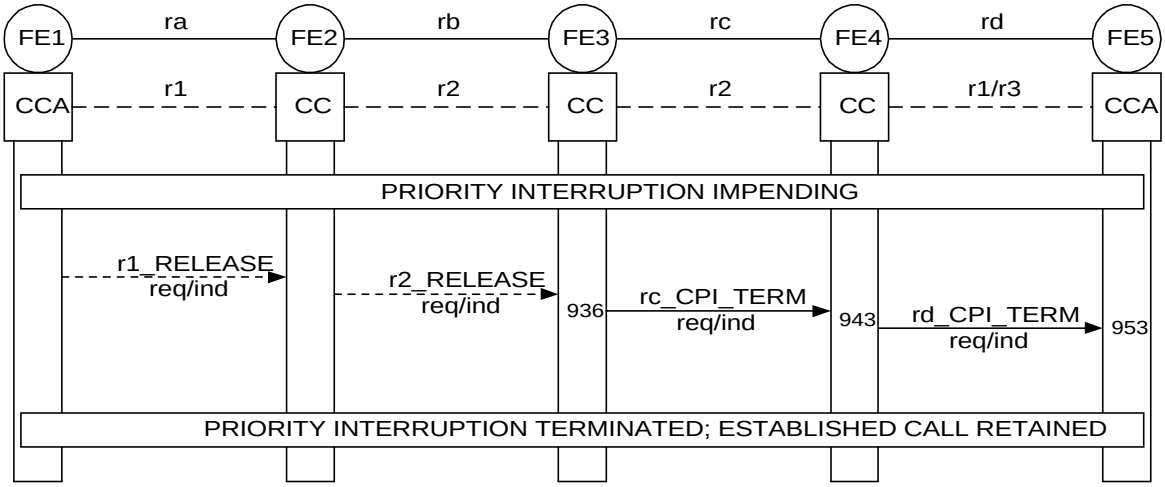

Figure 7 - Information flow sequence for SS-CPI - normal operation, priority call released during impending priority interruption state

© ISO/IEC 2003 – All rights reserved
Copyright International Organization for Standardization
Provided by IHS under license with ISO
No reproduction or networking permitted without license from IHS
Not for Resale

8.2.3.4 Normal operation, user information channel becomes available

Figure 8 shows the information flow sequence when a user information channel becomes available during the impending priority interruption state.

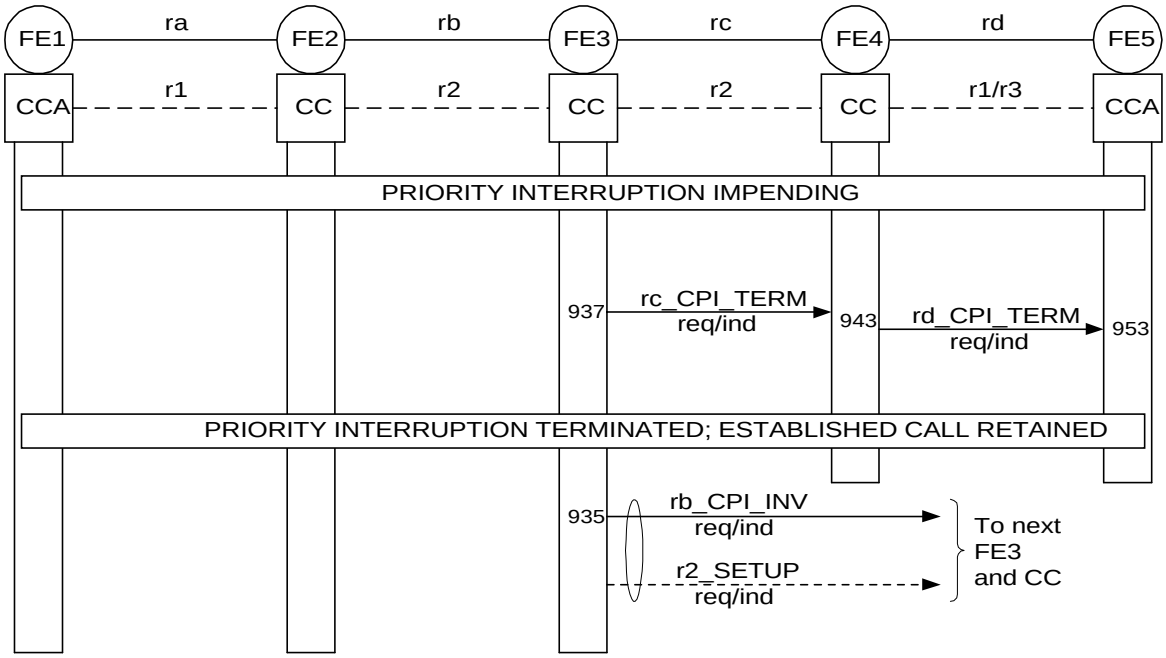

Figure 8 - Information flow sequence for SS-CPI - normal operation, user information channel becomes available during impending priority interruption state

8.3 Functional Entity actions

The following FE actions shall occur at the points indicated in the figures of 8.2.3.

8.3.1 Actions of FE1

911: The FE shall receive a ra_INFORM req/ind information flow and inform the served user that congestion has been encountered and that priority interruption may be requested.

912: The FE shall receive the user's request for call priority interruption and send a ra_CPI_INV req/ind information flow to FE2, optionally including a CPICL.

8.3.2 Actions of FE2

921: All information in the basic call r1_SETUP req/ind information flow shall be retained.

922: On receipt of r2_RELEASE_req/ind indicating congestion, the FE shall check whether the user is provided with SS-CPI using the consultation method and, if provided, shall start timer T1 (consultation timer) and store the call information for the duration of T1. The FE shall send a ra_INFORM req/ind flow to FE1. If the user is not provided with the interruption procedure of SS-CPI using the consultation method, the FE shall cause the call to be released.

923: The FE shall receive the ra_CPI_INV req/ind information flow from FE1. The FE shall stop the timer T1 and send a rb_CPI_INV req/ind information flow including a CPICL to FE3. If a CPICL has been included in the ra_CPI_INV req/ind information flow received from FE1, this CPICL shall be included in the rb_CPI_INV req/ind information flow sent to FE3.

924: The FE shall receive the ra_CPI_INV req/ind information flow from FE1 and check whether the user is provided with SS-CPI using the immediate invocation method. If provided, the FE shall send a rb_CPI_INV req/ind information flow including a CPICL to FE3. If a CPICL has been included in the ra_CPI_INV req/ind information flow received from FE1, this CPICL shall be included in the rb_CPI_INV req/ind information flow sent to FE3. If the user is not provided with SS-CPI using the immediate invocation method, the FE shall ignore the ra_CPI_INV req/ind information flow received from FE1.

© ISO/IEC 2003 – All rights reserved

Copyright International Organization for Standardization
Provided by IHS under license with ISO
No reproduction or networking permitted without license from IHS
Not for Resale

8.3.3 Actions of FE3

931: The FE shall receive the rb_CPI_INV req/ind information flow from FE2 or from a previous FE3.

932: The FE shall compare the CPICL with the CPIPLs for all active calls on the selected route and shall determine whether priority interruption is allowed or not.

933: If priority interruption is allowed, the FE shall either send a rc_CPI_WARN req/ind information flow to each FE4 and start timer T2 (impending priority interruption timer) or shall release the established call immediately and send a rc_FORCED_REL req/ind information flow to the FE4s.

934: When timer T2 has elapsed, the FE shall release the established call and send a rc_FORCED_REL req/ind information flow to the FE4s.

935: The FE shall send a rb_CPI_INV req/ind information flow including the received CPICL to the next FE3.

936: If the priority call is released during the impending priority interruption state, the FE shall send the rc_CPI_TERM req/ind information flow to each FE4 and terminate the impending priority interruption state. The established call shall revert back to the state that existed before the warning took place.

937: If a user information channel becomes available during the impending priority interruption state, the FE shall send the rc_CPI_TERM req/ind information flow to each FE4 and terminate the impending priority interruption state. The established call shall revert back to the state that existed before the warning took place.

8.3.4 Actions of FE4

941: The FE shall receive the rc_CPI_WARN req/ind information flow from FE3 and send a rd_CPI_WARN req/ind information flow to FE5.

942: The FE shall receive the rc_FORCED_REL req/ind information flow from FE3 and send a rd_FORCED_REL req/ind information flow to FE5.

943: The FE shall receive the rc_CPI_TERM req/ind information flow from FE3 and send a rd_CPI_TERM req/ind information flow to FE5.

8.3.5 Actions of FE5

951: The FE shall receive the rd_CPI_WARN req/ind information flow from FE4 and provide the user with the impending priority interruption warning notification.

952: The FE shall receive the rd_FORCED_REL req/ind information flow from FE4 and inform the user.

953: The FE shall receive the rd_CPI_TERM req/ind information flow from FE4 and inform the user.

8.4 Functional entity behaviour

The FE behaviours shown below are intended to illustrate typical FE behaviour in terms of information flows sent and received.

The behaviour of each FE is shown using the Specification and Description Language (SDL) defined in ITU-T Rec. Z.100 (1999).

8.4.1 Behaviour of FE1

Figure 9 shows the normal behaviour of FE1. Input symbols from the left and output symbols to the left represent primitives from and to the served user. Input symbols from the right and output symbols to the right represent information flows from and to FE2.

© ISO/IEC 2003 – All rights reserved
Copyright International Organization for Standardization
Provided by IHS under license with ISO
No reproduction or networking permitted without license from IHS
Not for Resale

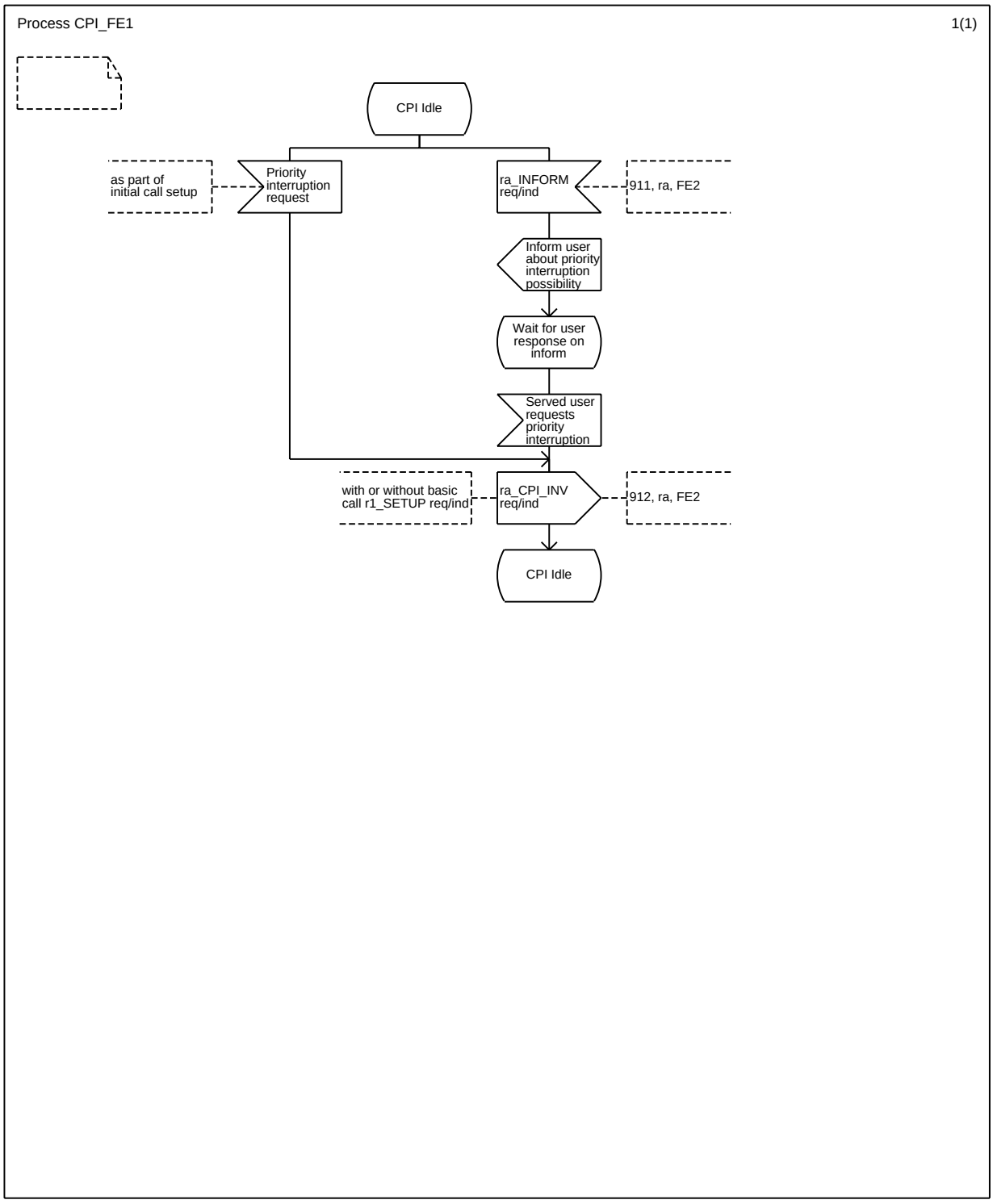

Figure 9 - SS-CPI, SDL for FE1

© ISO/IEC 2003 – All rights reserved

Copyright International Organization for Standardization
Provided by IHS under license with ISO
No reproduction or networking permitted without license from IHS
Not for Resale

8.4.2 Behaviour of FE2

Figure 10 shows the normal behaviour of FE2. Input symbols from the left and output symbols to the left represent information flows from and to FE1. Input symbols from the right and output symbols to the right represent information flows from and to FE3 and signals from and to the collocated CC.

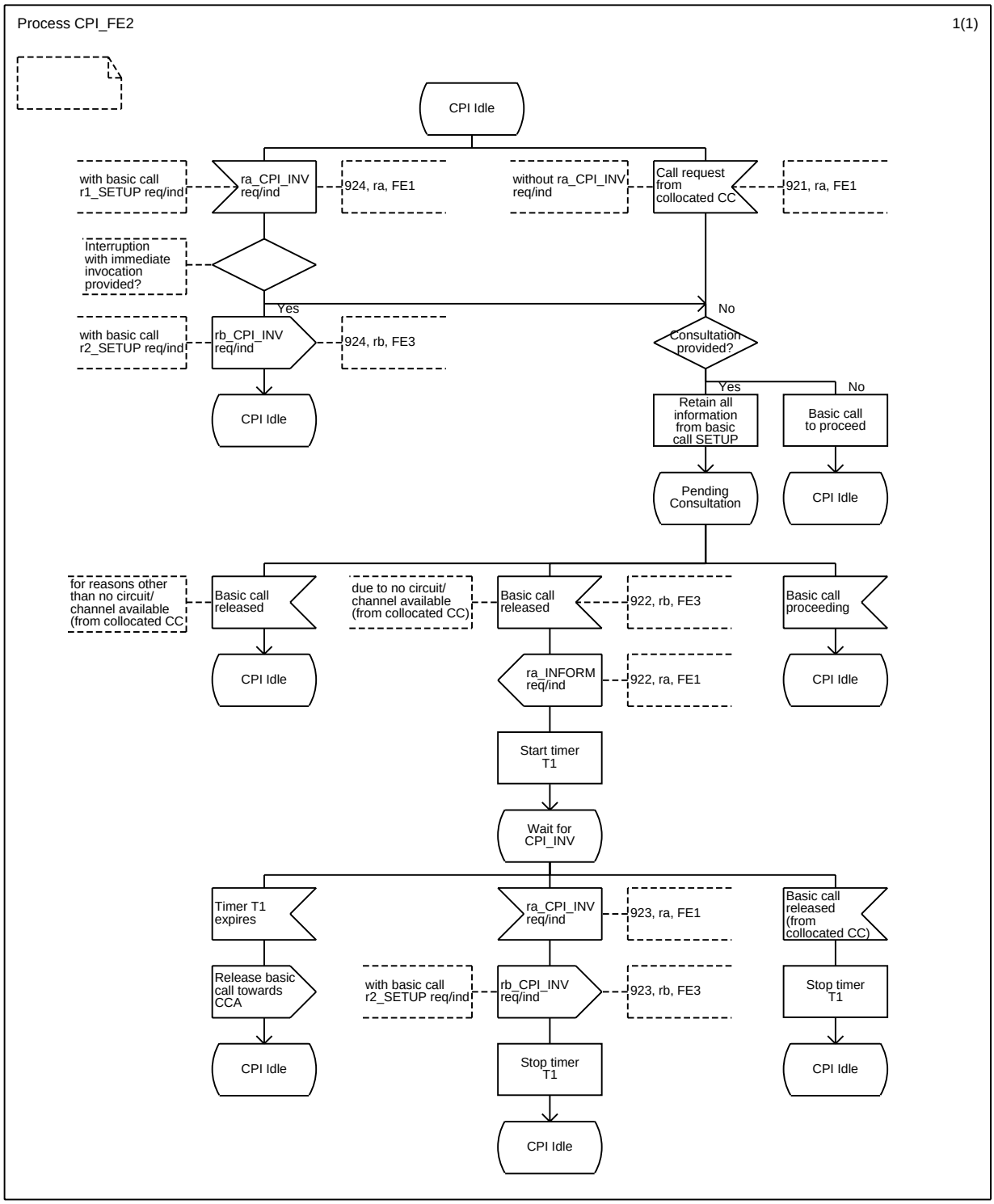

Figure 10 - SS-CPI, SDL for FE2

© ISO/IEC 2003 – All rights reserved
Copyright International Organization for Standardization
Provided by IHS under license with ISO
No reproduction or networking permitted without license from IHS
Not for Resale

8.4.3 Behaviour of FE3

Figure 11 shows the normal behaviour of FE3. Input symbols from the left represent information flows from FE2. Input symbols from the right and output symbols to the right represent information flows from and to FE4 and signals from and to the collocated CC.

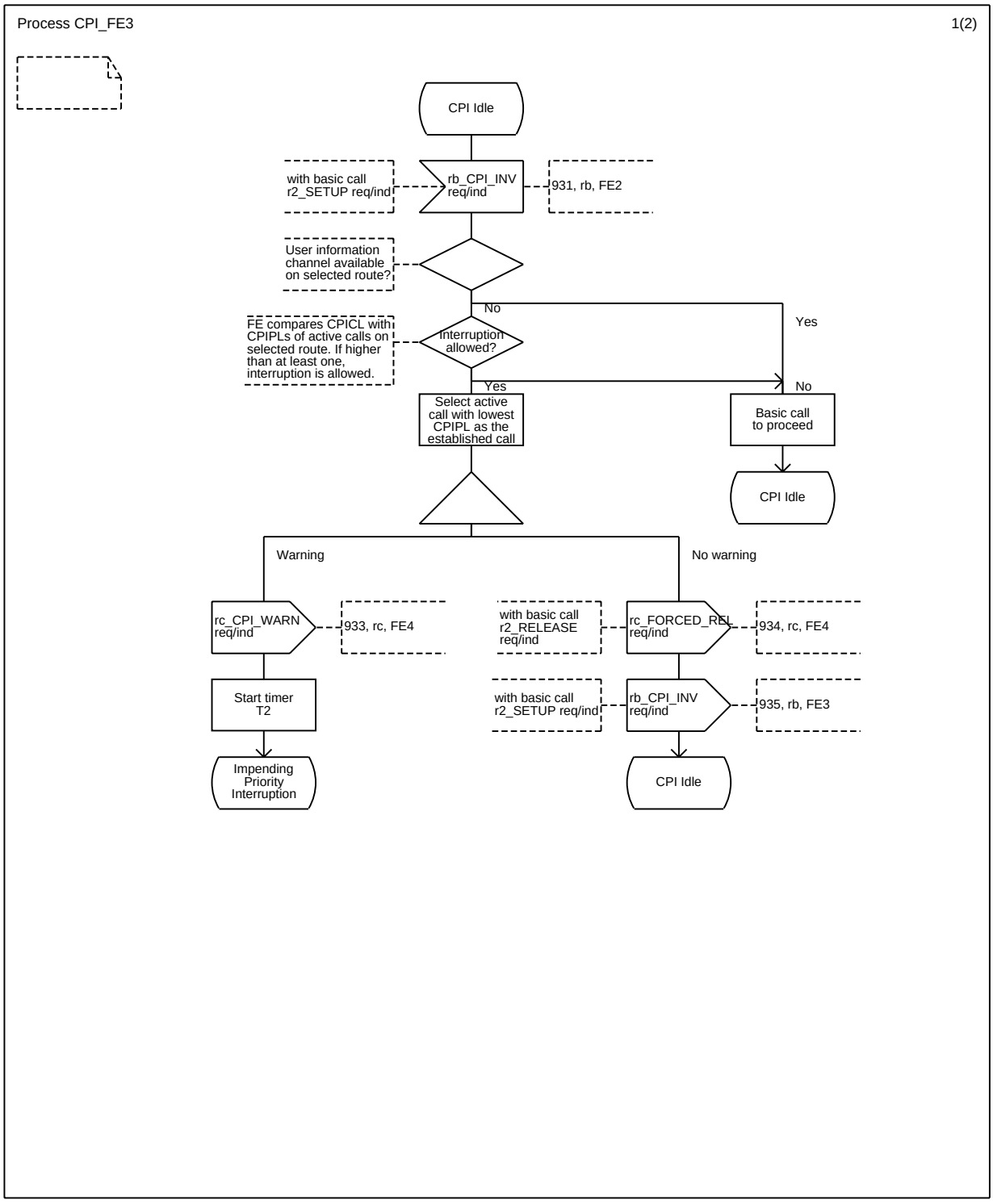

Figure 11 - SS-CPI, SDL for FE3 - Part 1 of 2

© ISO/IEC 2003 – All rights reserved
Copyright International Organization for Standardization
Provided by IHS under license with ISO
No reproduction or networking permitted without license from IHS
Not for Resale

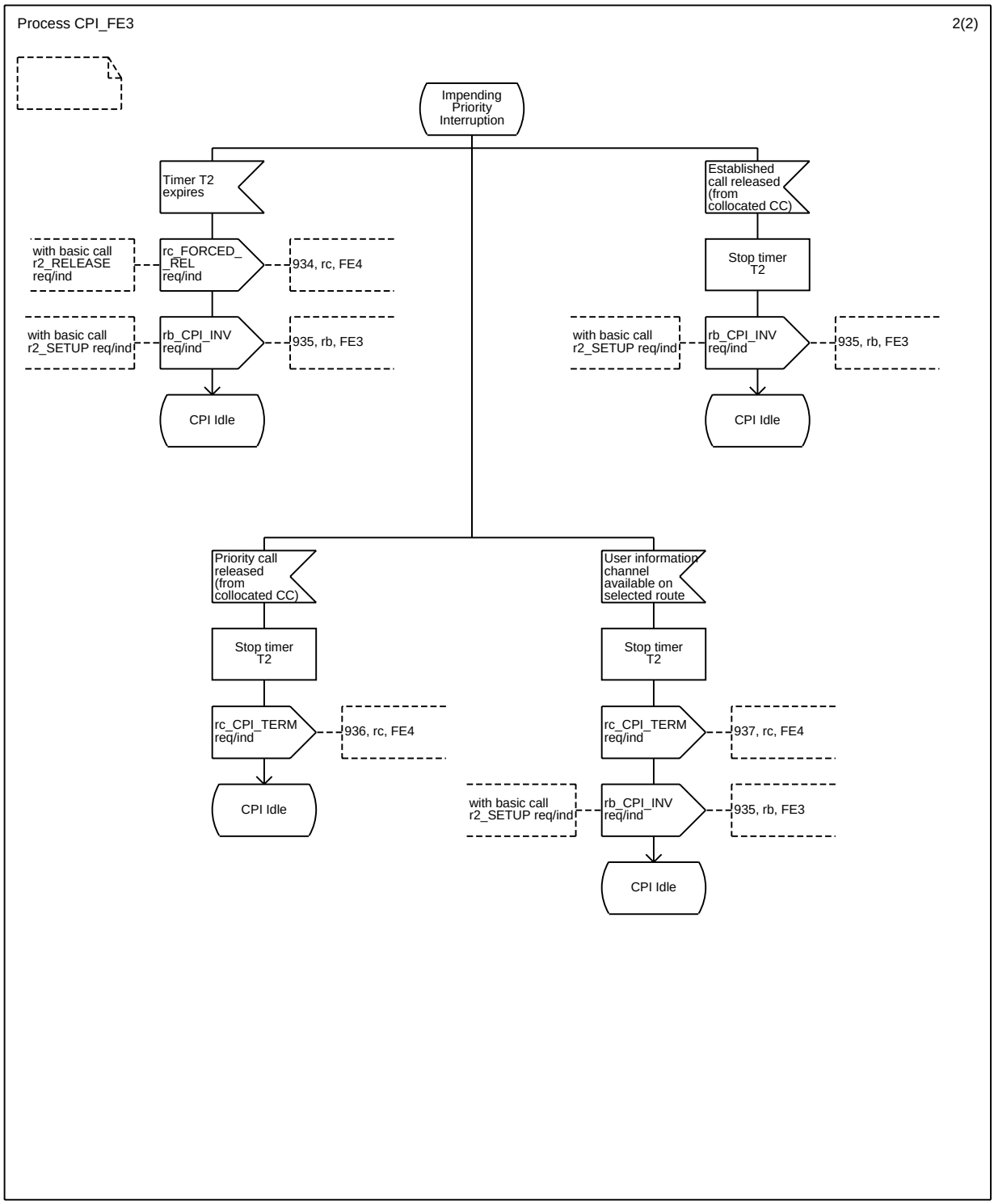

Figure 11 - SS-CPI, SDL for FE3 - Part 2 of 2

© ISO/IEC 2003 – All rights reserved
Copyright International Organization for Standardization
Provided by IHS under license with ISO
No reproduction or networking permitted without license from IHS
Not for Resale

8.4.4 Behaviour of FE4

Figure 12 shows the normal behaviour of FE4. Input symbols from the left represent information flows from FE3. Output symbols to the right represent information flows to FE5.

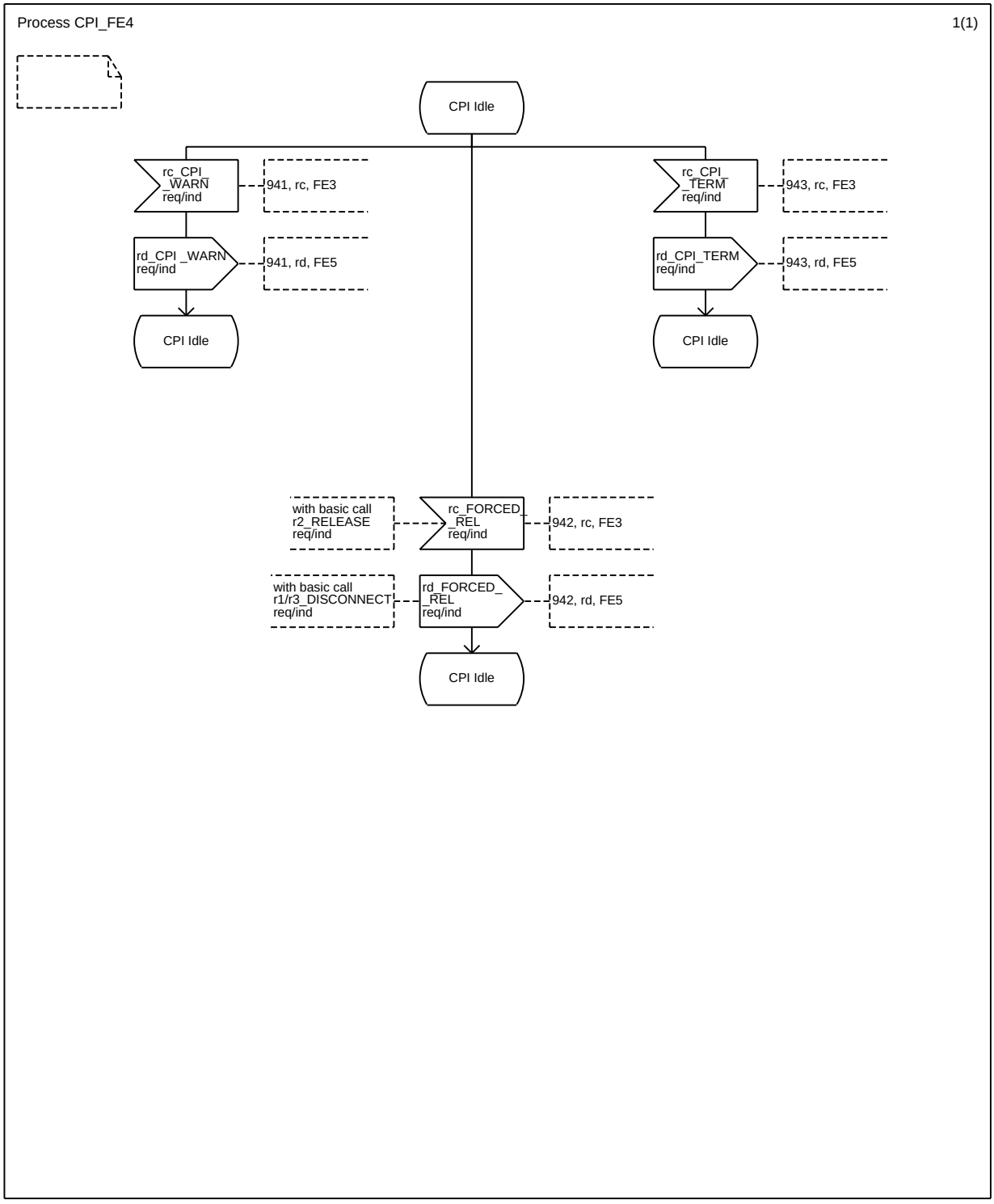

Figure 12 - SS-CPI, SDL for FE4

© ISO/IEC 2003 – All rights reserved

Copyright International Organization for Standardization
Provided by IHS under license with ISO
No reproduction or networking permitted without license from IHS
Not for Resale

8.4.5 Behaviour of FE5

Figure 13 shows the normal behaviour of FE5. Input symbols from the left represent information flows from FE4. Output symbols to the right represent primitives to the user.

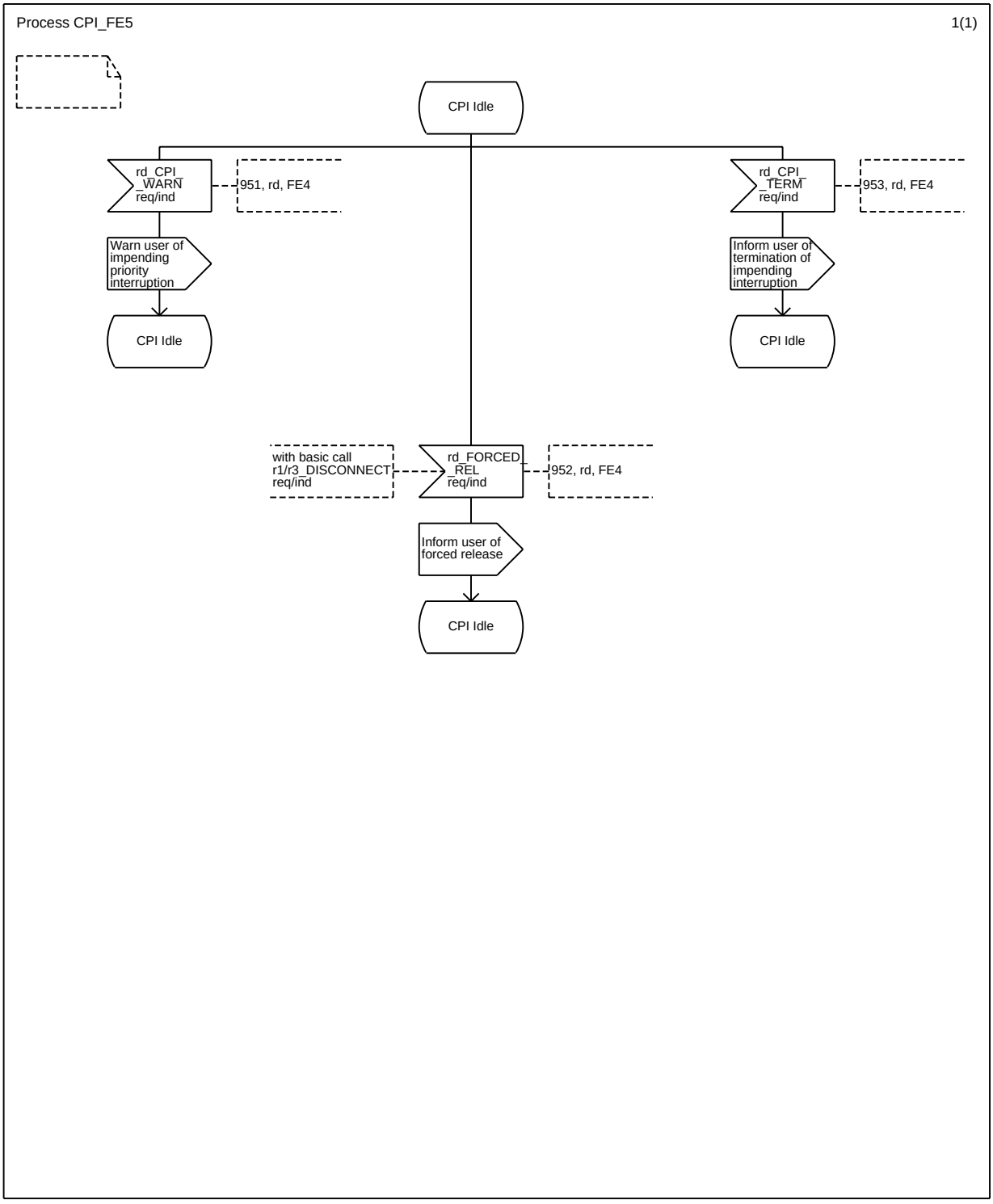

Figure 13 - SS-CPI, SDL for FE5

--`,,,`-`-`,,`,,`,`,,`---
© ISO/IEC 2003 – All rights reserved
Copyright International Organization for Standardization
Provided by IHS under license with ISO
No reproduction or networking permitted without license from IHS
Not for Resale

8.5 Allocation of Functional Entities to physical equipment

Table 4 shows the allocation of Functional Entities to physical equipment. In this table, "TE" indicates a TE attached to a PISN. Where a terminal involved is stimulus with respect to SS-CPI, any TE shown as residing in the corresponding user's TE, shall reside instead in that user's PINX.

Table 4 - Scenarios for the allocation of FEs to physical equipment

Scenario	FE1	FE2	FE3	FE4	FE5
1	Served user TE	Served user PINX	Transit PINX	Established call user's PINX	Established call user's TE
2	Served user TE	Served user PINX	Served user PINX	Established call user's PINX	Established call user's TE

8.6 Interworking considerations

SS-CPI applies only to portions of a call that lie within the PISN. For calls to and from other networks the Functional Entities are allocated to physical equipment as shown in table 5.

Table 5 - Scenarios for the allocation of FEs to physical equipment for normal operation in case of interworking with another network

Scenario	FE1	FE2	FE3	FE4	FE5
3	Other network	Other network	Incoming Gateway PINX	Established call user's PINX	Established call user's TE
4	Served user TE	Served user PINX	Transit PINX	Outgoing Gateway PINX	Other network
5	Served user TE	Served user PINX	Served user PINX	Outgoing Gateway PINX	Other network

9 SS-CPIP stage 2 specification

9.1 Functional model

9.1.1 Functional model description

The functional model shall comprise the following Functional Entities (FE):

FE1 Calling user agent;

FE2 Calling user's control entity;

FE3 SS-CPIP transit entity;

FE4 Called user's control entity;

FE5 Called user agent.

The following functional relationships shall exist between these FEs:

ra between FE1 and FE2;

rb between FE2 and FE4, between FE2 and FE3, between a pair of FE3s, and between FE3 and FE4;

rc between FE4 and FE5.

Figure 14 shows these FEs and relationships.

© ISO/IEC 2003 – All rights reserved

Copyright International Organization for Standardization
Provided by IHS under license with ISO
No reproduction or networking permitted without license from IHS
Not for Resale

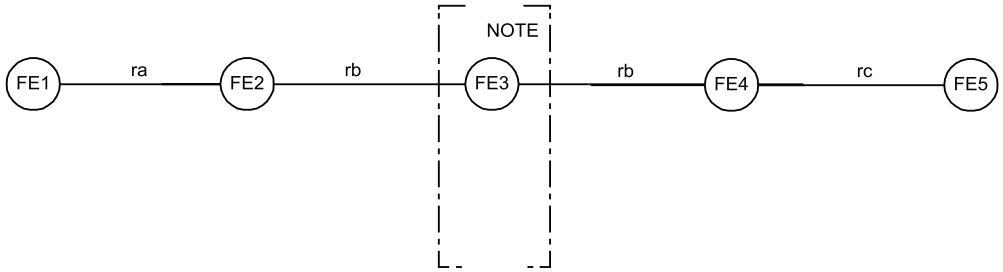

NOTE - Functional entities shown within square brackets may be absent or may repeat as necessary.

Figure 14 - Functional model for SS-CPIP

9.1.2 Description of Functional Entities

9.1.2.1 Calling user agent, FE1

This functional entity:

- receives protection requests from the calling user and passes these on to FE2.

9.1.2.2 Calling user's control entity, FE2

This functional entity:

- receives and validates requests from FE1 for forward invocation of SS-CPIP;
- if SS-CPIP is applicable for the call, sends an invocation request ("forward invocation request") to FE3 or FE4 at the time of the original basic call r2_SETUP-request/indication;
- receives backward invocation requests from FE3 or FE4;
- saves the protection level for the call.

9.1.2.3 SS-CPIP transit entity, FE3

This functional entity:

- on an incoming call with a SS-CPIP request sends a forward invocation request to the next FE3 or to an FE4 at the time of the original basic call r2_SETUP-request/indication;
- receives backward invocation requests from FE4, or a subsequent FE3, and passes them on to FE2, or a preceding FE3;
- saves the protection level for the call.

9.1.2.4 Called user's control entity, FE4

This functional entity:

- receives forward invocation requests from FE2 or FE3;
- receives and validates requests from FE5 for invocation of SS-CPIP in the backward direction;
- if SS-CPIP is applicable in the backward direction (i.e., if the protection level requested by the called user is higher than that requested by the calling user), sends an invocation request ("backward invocation request") to FE2 or FE3 at the time of the r2_SETUP-response/confirm information flows;
- saves the protection level for the call.

9.1.2.5 Called user agent, FE5

This functional entity:

- receives protection requests from the called user and passes these on to FE4.

9.1.3 Relationship of functional model to basic call functional model

An example of a relationship between the FEs for SS-CPIP and the FEs for the basic call is shown in figure 15.

© ISO/IEC 2003 – All rights reserved
Copyright International Organization for Standardization
Provided by IHS under license with ISO
No reproduction or networking permitted without license from IHS
Not for Resale

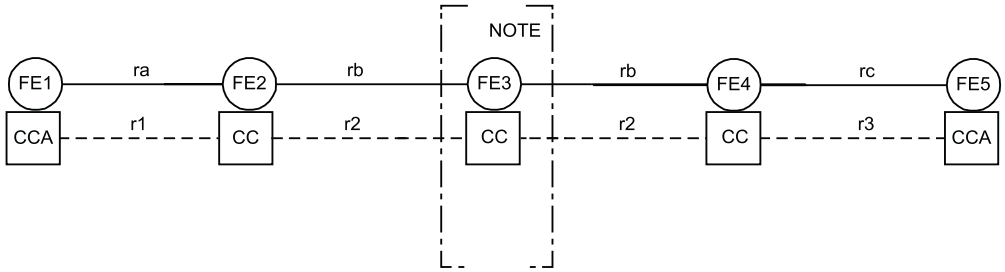

NOTE - Functional entities shown within square brackets may be absent or may repeat as necessary.

Figure 15 - Example relationship between the model for SS-CPIP and basic call

9.2 Information flows

9.2.1 Definition of information flows

In the tables listing the elements in information flows, the column headed "Request" indicates which of these elements are mandatory (M) and which are optional (O) in a request/indication information.

9.2.1.1 Relationship ra

9.2.1.1.1 ra_CPIP_F_INV

ra_CPIP_F_INV is an unconfirmed information flow sent across ra from FE1 to FE2. It is used to invoke protection in the forward direction.

Table 6 lists the elements within the ra_CPIP_F_INV information flow.

Table 6 - Content of ra_CPIP_F_INV

Element	Request
CPIPL	O (NOTE 14)

NOTE 14 - Between FE1 and FE2 this element may be omitted in the case that the calling user does not have the capability to change or select CPIPL. This element shall have a value in the range 0 (no protection) to 3 (total protection).

9.2.1.2 Relationship rb

9.2.1.2.1 rb_CPIP_F_INV

rb_CPIP_F_INV is an unconfirmed information flow sent across rb from FE2 to FE4, from FE2 to FE3, from FE3 to a subsequent FE3, and from FE3 to FE4. It is used to invoke protection in the forward direction.

Table 7 lists the elements within the rb_CPIP_F_INV information flow.

Table 7 - Content of rb_CPIP_F_INV

Element	Request
CPIPL	M (NOTE 15)

NOTE 15 - This element shall have a value in the range 0 (no protection) to 3 (total protection).

9.2.1.2.2 rb_CPIP_B_INV

rb_CPIP_B_INV is an unconfirmed information flow sent across rb from FE4 to FE2, from FE4 to FE3, from FE3 to a subsequent FE3, and from FE3 to FE2. It is used to invoke protection in the backward direction.

Table 8 lists the elements within the rb_CPIP_B_INV information flow.

Table 8 - Content of rb_CPIP_B_INV

Element	Request
CPIPL	M (NOTE 16)

NOTE 16 - This element shall have a value in the range 0 (no protection) to 3 (total protection).

© ISO/IEC 2003 – All rights reserved

Copyright International Organization for Standardization
Provided by IHS under license with ISO
No reproduction or networking permitted without license from IHS
Not for Resale

9.2.1.3 Relationship rc

9.2.1.3.1 rc_CPIP_B_INV

rc_CPIP_B_INV is an unconfirmed information flow sent across rc from FE5 to FE4. It is used to invoke protection in the backward direction.

Table 9 lists the elements within the rc_CPIP_B_INV information flow.

Table 9 - Content of rc_CPIP_B_INV

Element	Request
CPIPL	O (NOTE 17)

NOTE 17 - Between FE5 and FE4 this element may be omitted in the case that the called user does not have the capability to change or select CPIPL. This element shall have a value in the range 0 (no protection) to 3 (total protection).

9.2.2 Relationship of information flows to basic call information flows

Table 10 summarises the relationships of the SS-CPIP information flows with those of the basic call.

Table 10 - Relationship of the SS-CPIP information flows with the basic call

Information flow			Independent of basic call flow	With basic call flow	Basic call flows
ra	ra_CPIP_F_INV	request	no	yes	r1_SETUP req/ind
rb	rb_CPIP_F_INV	request	no	yes	r2_SETUP req/ind
	rb_CPIP_B_INV	request	no	yes	r2_SETUP resp/conf
rc	rc_CPIP_B_INV	request	no	yes	r3_SETUP resp/conf

9.2.3 Information flow sequences

A stage 3 standard for SS-CPIP shall provide signalling procedures in support of the information flow sequences specified below. In addition, signalling procedures should be provided to cover other sequences arising from error situations, interactions with basic call, interactions with other supplementary services, different topologies, etc.

In the figures, SS-CPIP information flows are represented by solid arrows and basic call information flows are represented by broken arrows. An ellipse embracing two information flows indicates that the two information flows occur simultaneously. Within a column representing a SS-CPIP functional entity, the numbers refer to functional entity actions listed in 9.3

The following abbreviations are used:

req request;

ind indication.

--`,,`-`-`,,`,,`,`,,`---

© ISO/IEC 2003 – All rights reserved
Copyright International Organization for Standardization
Provided by IHS under license with ISO
No reproduction or networking permitted without license from IHS
Not for Resale

9.2.3.1 Normal operation, forward direction

Figure 16 shows the information flow sequence for a successful protection attempt invoked in the forward direction.

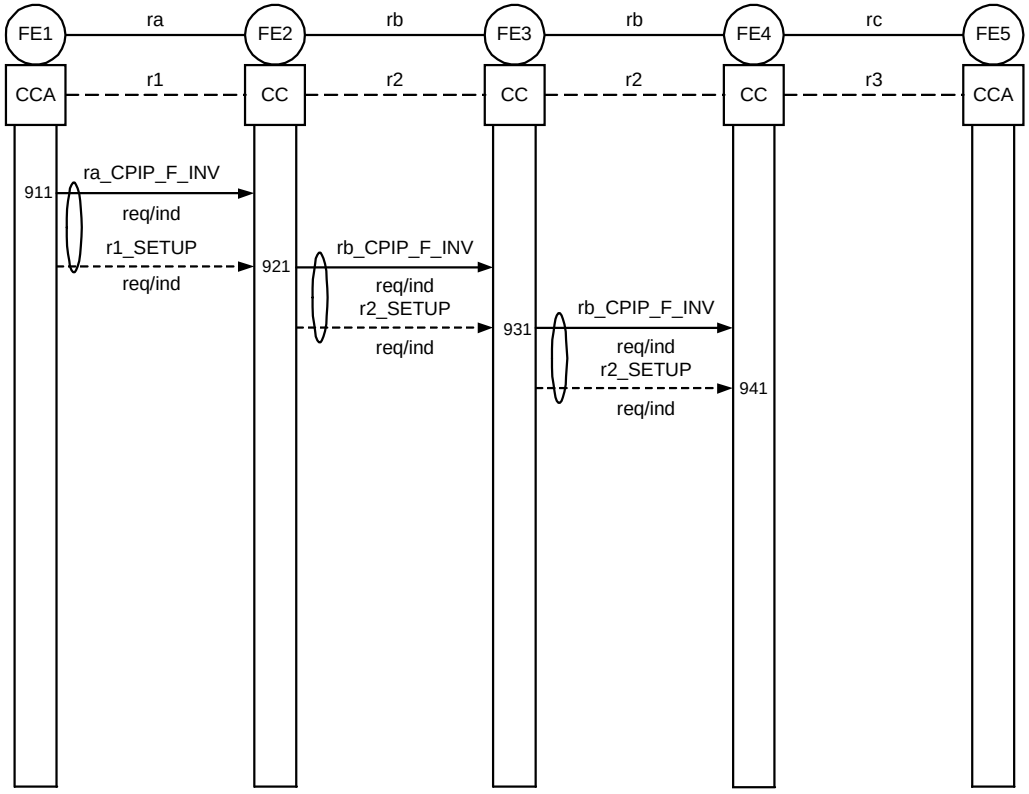

Figure 16 - Information flow sequence for SS-CPIP - normal operation, forward direction

© ISO/IEC 2003 – All rights reserved

Copyright International Organization for Standardization
Provided by IHS under license with ISO
No reproduction or networking permitted without license from IHS
Not for Resale

9.2.3.2 Normal operation, both directions

Figure 17 shows the information flow sequence for a successful protection attempt invoked in both directions.

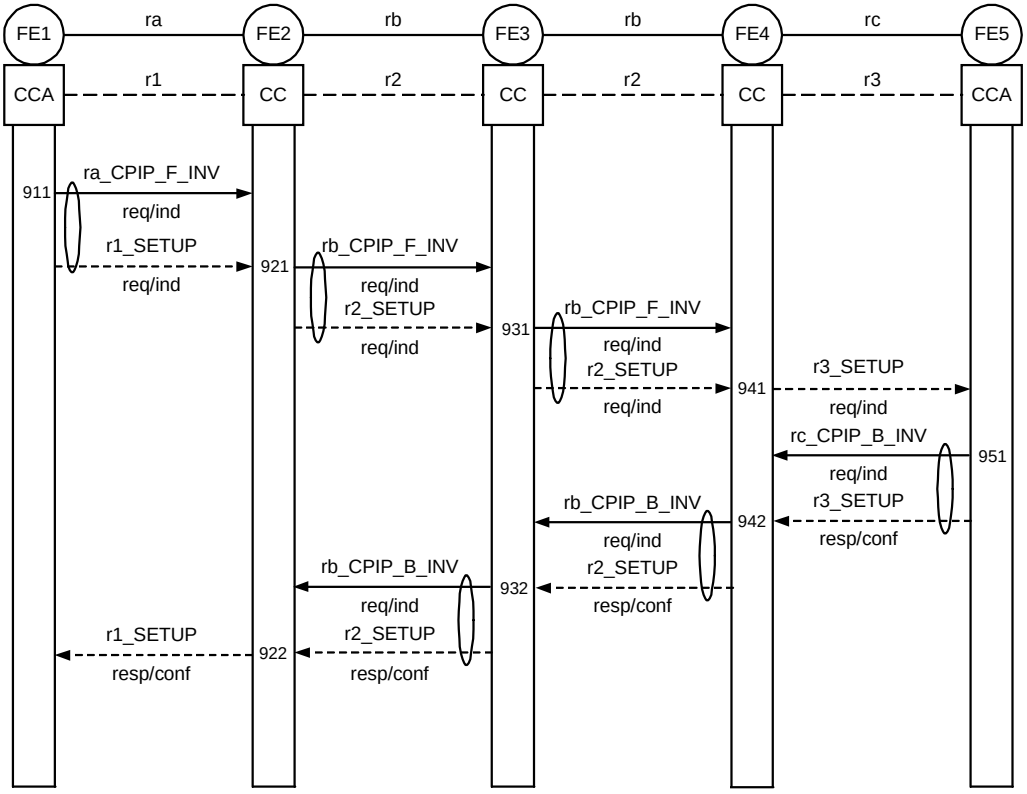

Figure 17 - Information flow sequence for SS-CPIP - normal operation, both directions

© ISO/IEC 2003 – All rights reserved
Copyright International Organization for Standardization
Provided by IHS under license with ISO
No reproduction or networking permitted without license from IHS
Not for Resale

9.2.3.3 Normal operation, backward direction

Figure 18 shows the information flow sequence for a successful protection attempt invoked in the backward direction.

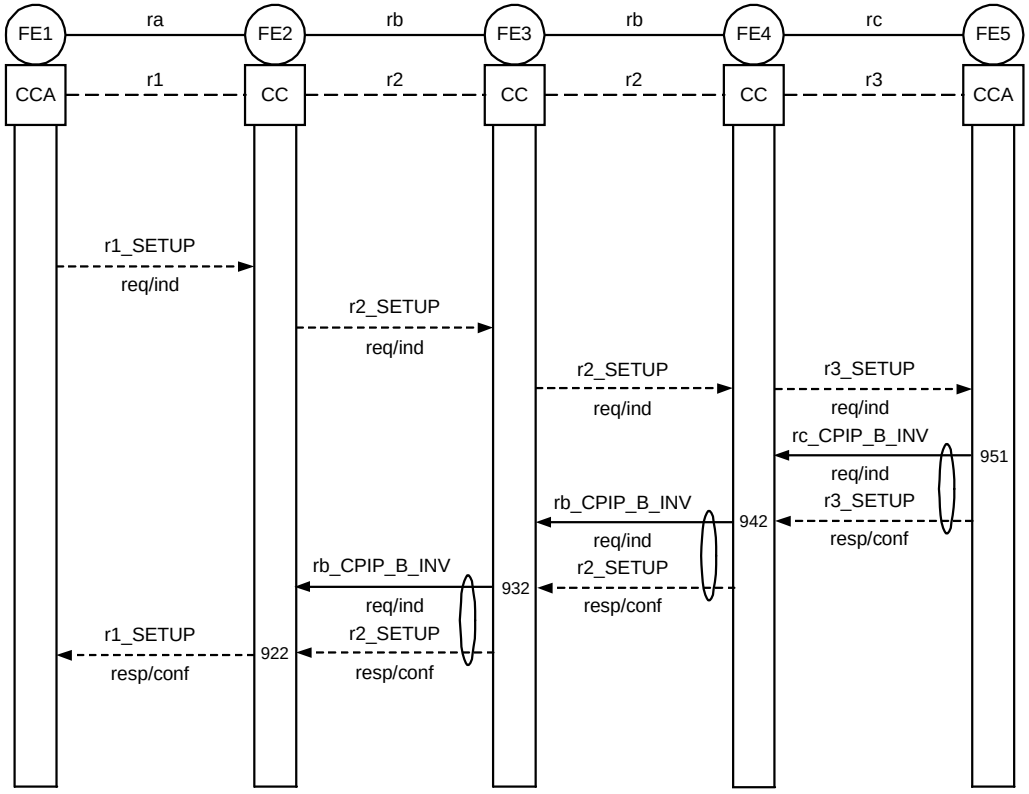

Figure 18 - Information flow sequence for SS-CPIP - normal operation, backward direction

9.3 Functional Entity actions

The following FE actions shall occur at the points indicated in the figures of 9.2.3.

9.3.1 Actions of FE1

911: The FE shall receive the user's request for call protection and send a ra_CPIP_F_INV req/ind to FE2, optionally including CPIPL.

9.3.2 Actions of FE2

921: The FE shall receive the ra_CPIP_F_INV req/ind information flow from FE1 and check whether the user is provided with the forward invocation procedure of SS-CPIP. If provided, the FE shall send a rb_CPIP_F_INV req/ind information flow including a CPIPL to FE4 or FE3. If a CPIPL has been included in the ra_CPIP_F_INV req/ind information flow received from FE1, this CPIPL shall be included in the rb_CPIP_F_INV req/ind information flow sent to FE4 or FE3. The FE shall save the protection level of the call. If the user is not provided with the forward invocation procedure of SS-CPIP, the FE shall ignore the ra_CPIP_F_INV req/ind information flow received from FE1.

922: The FE shall receive the rb_CPIP_B_INV req/ind information flow from FE4 or FE3. The FE shall save the value of the CPIPL included in the rb_CPIP_B_INV req/ind information flow as the protection level for the duration of the call.

9.3.3 Actions of FE3

931: The FE shall receive the rb_CPIP_F_INV req/ind information flow from FE2 or from a previous FE3, and shall store the CPIPL value as the protection level for the duration of the call. The FE shall send a rb_CPIP_F_INV req/ind information flow including the received CPIPL to the next FE3 (if there is one) or to FE4.

© ISO/IEC 2003 – All rights reserved

Copyright International Organization for Standardization
Provided by IHS under license with ISO
No reproduction or networking permitted without license from IHS
Not for Resale

932: The FE shall receive the rb_CPIP_B_INV req/ind information flow from FE4 or from a previous FE3. The FE shall save the value of the CPIPL included in the rb_CPIP_B_INV req/ind information flow as the protection level for the duration of the call.

The FE shall send a rb_CPIP_INV req/ind information flow including the received CPIPL to the next FE3 (if there is one) or to FE2.

9.3.4 Actions of FE4

941: The FE shall receive the rb_CPIP_F_INV req/ind information flow from FE2 or from a previous FE3, and shall store the CPIPL value as the protection level for the duration of the call.

942: The FE shall receive the rc_CPIP_B_INV req/ind information flow from FE5 and check whether the user is provided with the backward invocation procedure of SS-CPIP. The FE shall also check whether a CPIPL has been included in the rc_CPIP_B_INV req/ind information flow received from FE5. If the backward invocation procedure is provided, and if the CPIPL has a higher value than that already saved for the call, the FE shall save this value as the protection level for the duration of the call.

The FE shall send a rb_CPIP_B_INV req/ind information flow including a CPIPL to FE3 or FE2. If a CPIPL has been included in the rc_CPIP_B_INV req/ind information flow received from FE5, this CPIPL shall be included in the rb_CPIP_B_INV req/ind information flow sent to FE3 or FE2. If the user is not provided with the backward invocation procedure of SS-CPIP, or if the CPIPL does not have a higher value than that already saved for the call, the FE shall ignore the rc_CPIP_B_INV req/ind information flow received from FE5.

9.3.5 Actions of FE5

951: The FE shall receive the user's request for call protection and send a rc_CPIP_B_INV req/ind to FE4, optionally including CPIPL.

9.4 Functional entity behaviour

The FE behaviours shown below are intended to illustrate typical FE behaviour in terms of information flows sent and received.

The behaviour of each FE is shown using the Specification and Description Language (SDL) defined in ITU-T Rec. Z.100 (1999).

© ISO/IEC 2003 – All rights reserved
Copyright International Organization for Standardization
Provided by IHS under license with ISO
No reproduction or networking permitted without license from IHS
Not for Resale

9.4.1 Behaviour of FE1

Figure 19 shows the normal behaviour of FE1. Input symbols from the left and output symbols to the left represent primitives from and to the calling user. Input symbols from the right and output symbols to the right represent information flows from and to FE2.

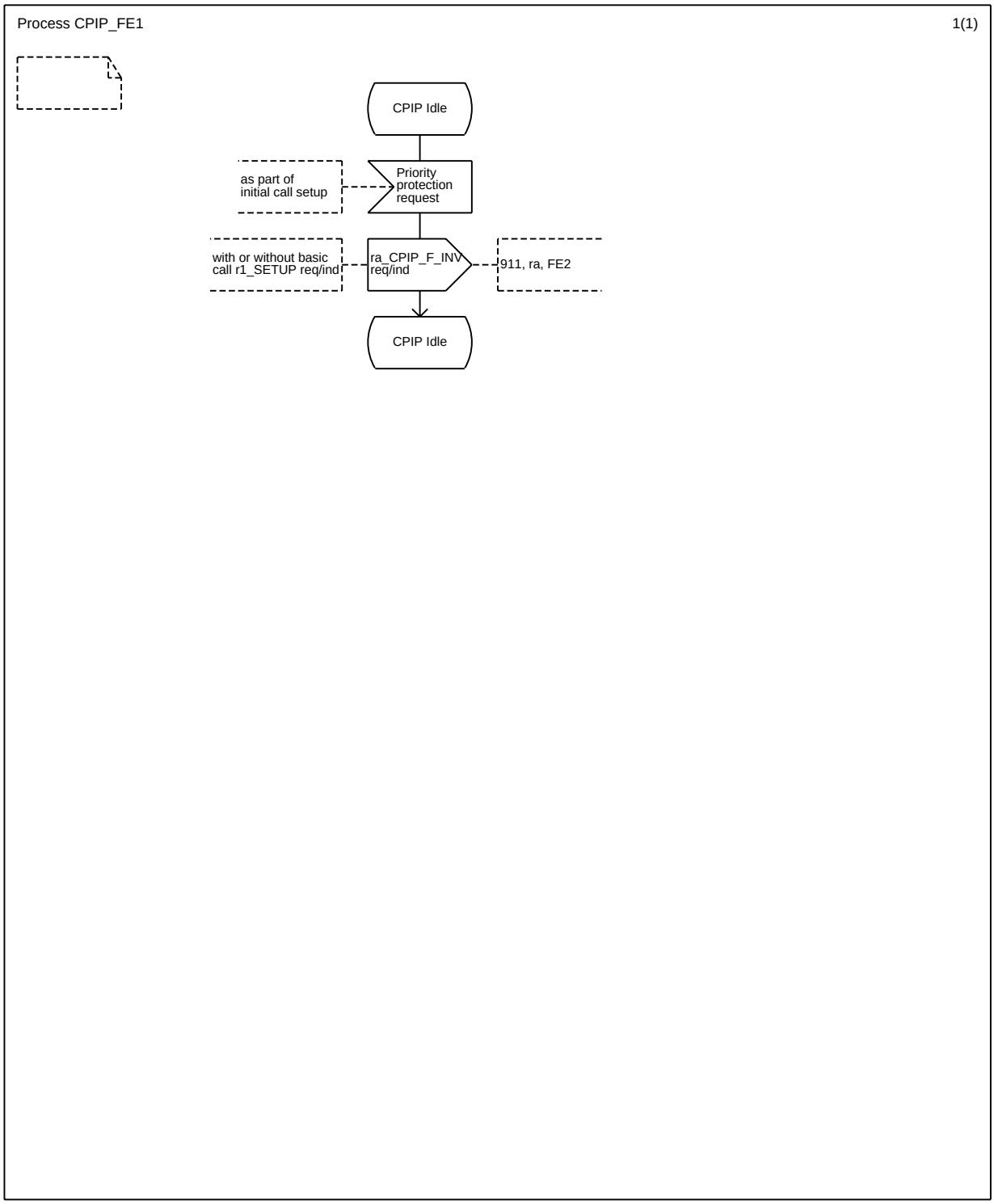

Figure 19 - SS-CPIP, SDL for FE1

© ISO/IEC 2003 – All rights reserved

Copyright International Organization for Standardization
Provided by IHS under license with ISO
No reproduction or networking permitted without license from IHS
Not for Resale

9.4.2 Behaviour of FE2

Figure 20 shows the normal behaviour of FE2. Input symbols from the left and output symbols to the left represent information flows from and to FE1. Input symbols from the right and output symbols to the right represent information flows from and to FE3 or FE4 and signals from and to the collocated CC.

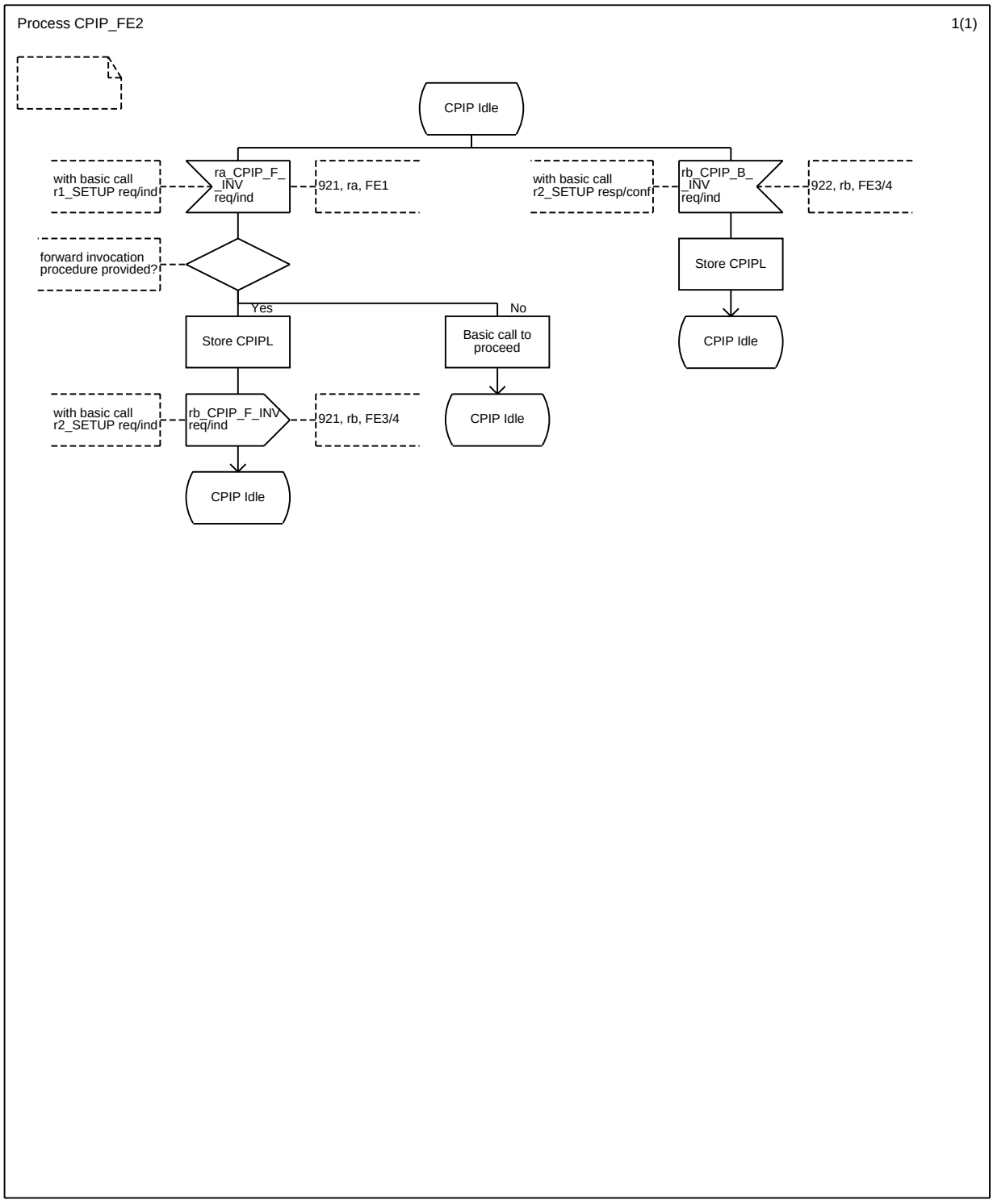

Figure 20 - SS-CPIP, SDL for FE2

--`,,`-`-`,,`,,`,`,,`---
© ISO/IEC 2003 – All rights reserved
Copyright International Organization for Standardization
Provided by IHS under license with ISO
No reproduction or networking permitted without license from IHS
Not for Resale

9.4.3 Behaviour of FE3

Figure 21 shows the normal behaviour of FE3. Input symbols from the left represent information flows from FE2. Input symbols from the right and output symbols to the right represent information flows from and to FE4.

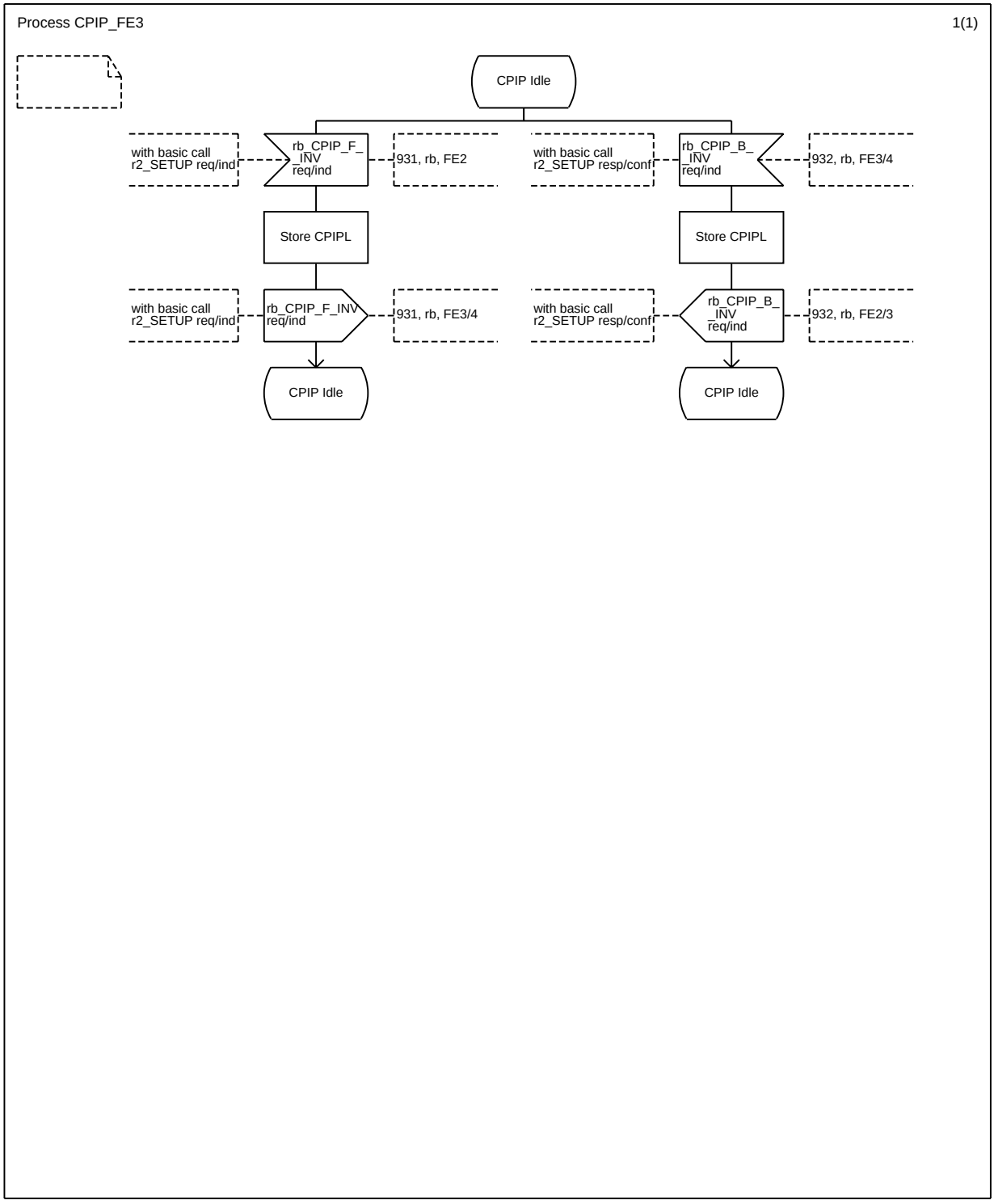

Figure 21 - SS-CPIP, SDL for FE3

© ISO/IEC 2003 – All rights reserved

Copyright International Organization for Standardization
Provided by IHS under license with ISO
No reproduction or networking permitted without license from IHS
Not for Resale

9.4.4 Behaviour of FE4

Figure 22 shows the normal behaviour of FE4. Input symbols from the left represent information flows from FE3 or FE2. Input symbols from the right represent information flows from FE5. Output symbols to the left represent information flows to FE3 or FE2.

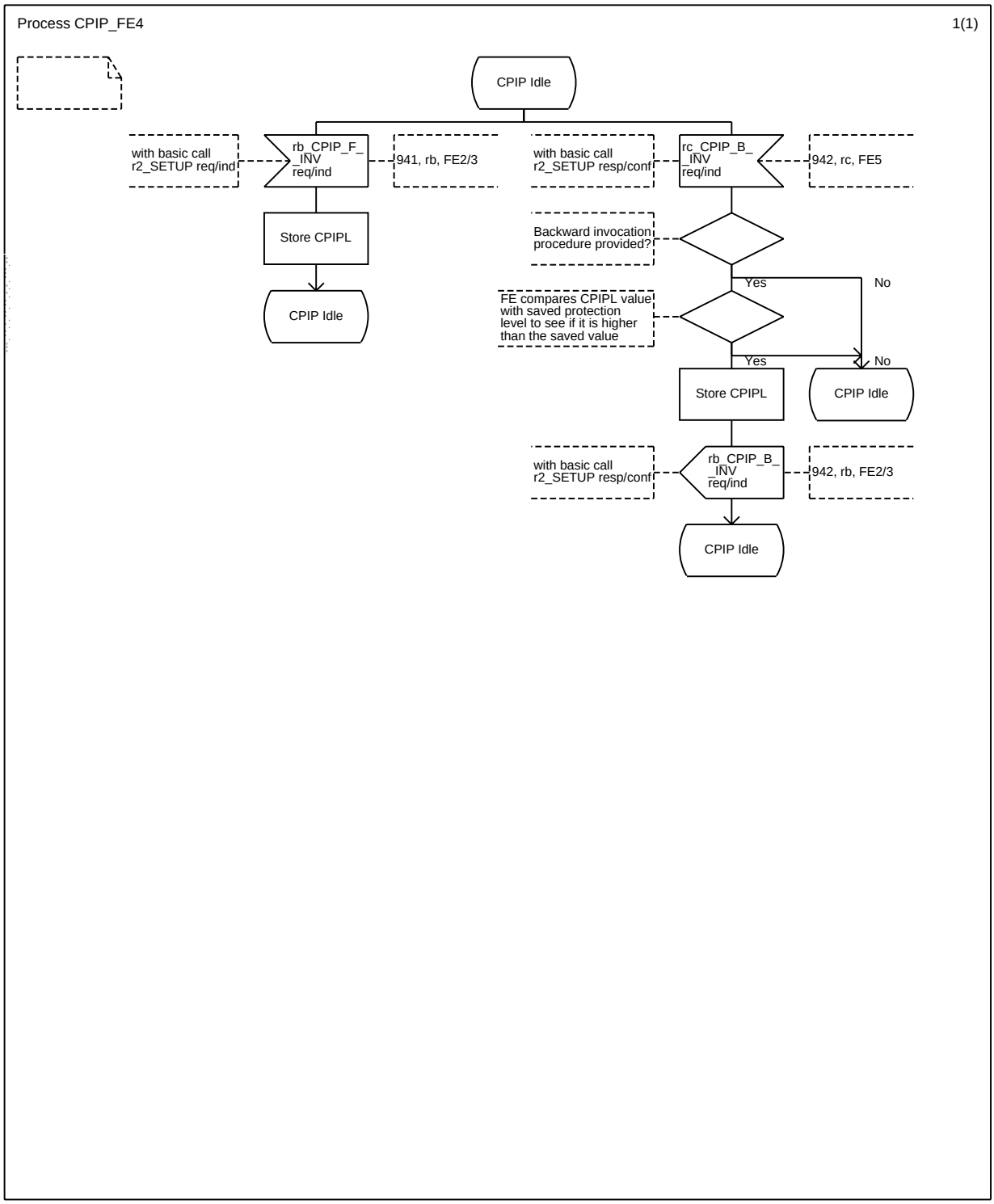

Figure 22 - SS-CPIP, SDL for FE4

© ISO/IEC 2003 – All rights reserved
Copyright International Organization for Standardization
Provided by IHS under license with ISO
No reproduction or networking permitted without license from IHS
Not for Resale

9.4.5 Behaviour of FE5

Figure 23 shows the normal behaviour of FE5. Input symbols from the right represent primitives from the called user. Output symbols to the left represent information flows to FE4.

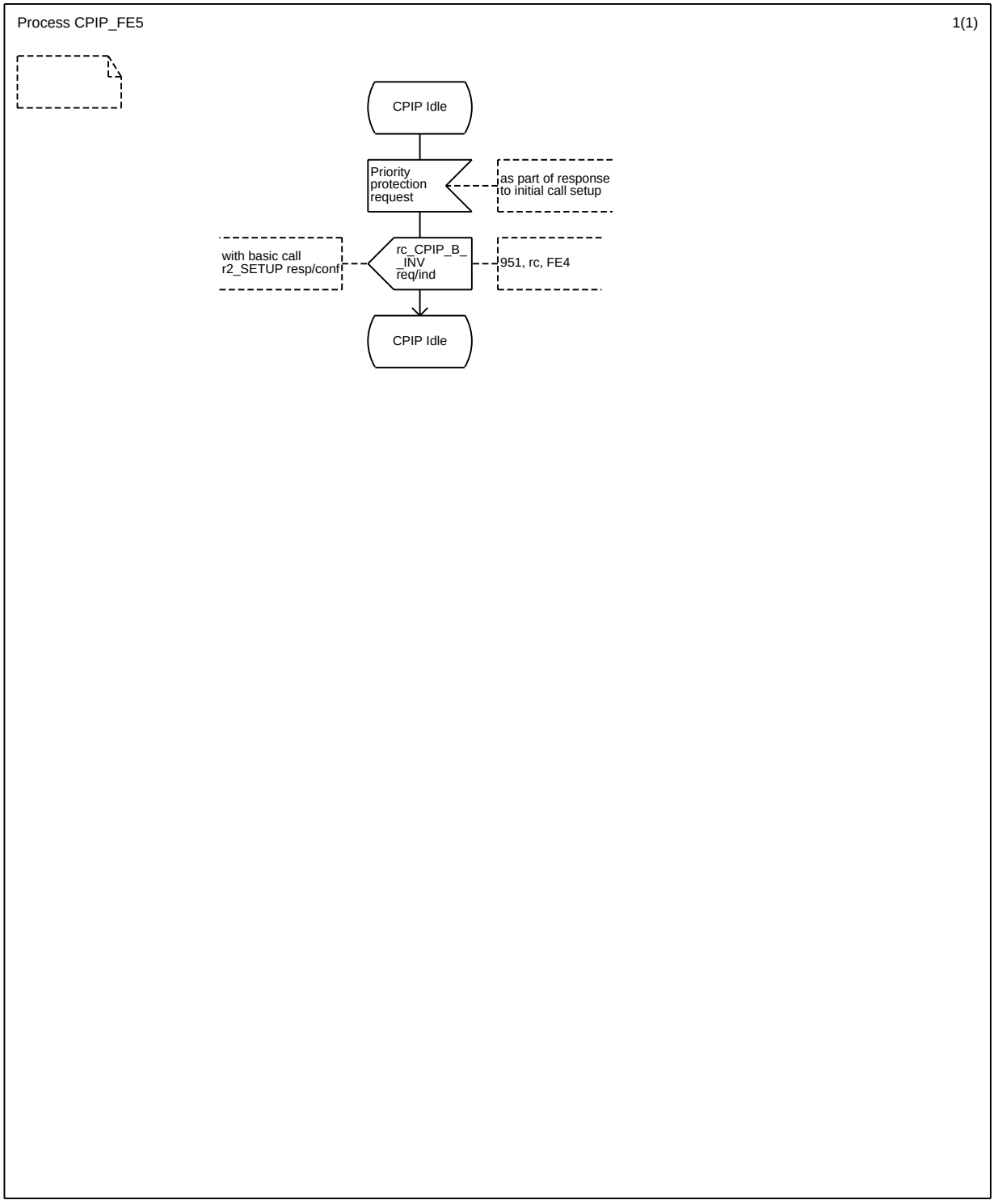

Figure 23 - SS-CPIP, SDL for FE5

© ISO/IEC 2003 – All rights reserved

Copyright International Organization for Standardization
Provided by IHS under license with ISO
No reproduction or networking permitted without license from IHS
Not for Resale

9.5 Allocation of Functional Entities to physical equipment

Table 11 shows the allocation of Functional Entities to physical equipment. In this table, TE indicates a TE attached to a PISN. Where a terminal involved is stimulus with respect to SS-CPIP, any TE shown as residing in the corresponding user's TE, shall reside instead in that user's PINX.

Table 11 - Scenarios for the allocation of FEs to physical equipment

Scenario	FE1	FE2	FE3	FE4	FE5
1	Calling user TE	Calling user PINX	Transit PINX	Called user PINX	Called user TE

9.6 Interworking considerations

SS-CPIP applies only to portions of a call that lie within the PISN. For calls to and from other networks the Functional Entities are allocated to physical equipment as shown in table 12.

Table 12 - Scenarios for the allocation of FEs to physical equipment for normal operation in case of interworking with another network

Scenario	FE1	FE2	FE3	FE4	FE5
2	Other network	Incoming Gateway PINX	Transit PINX	Called user's PINX	Called user's TE
3	Calling user TE	Calling user PINX	Transit PINX	Outgoing Gateway PINX	Other network

© ISO/IEC 2003 – All rights reserved
Copyright International Organization for Standardization
Provided by IHS under license with ISO
No reproduction or networking permitted without license from IHS
Not for Resale

Copyright International Organization for Standardization
Provided by IHS under license with ISO
No reproduction or networking permitted without license from IHS
Not for Resale

ICS 33.040.35

Price based on 42 pages

© ISO/IEC 2003 – All rights reserved
Copyright International Organization for Standardization
Provided by IHS under license with ISO
No reproduction or networking permitted without license from IHS
Not for Resale